TOYOTA

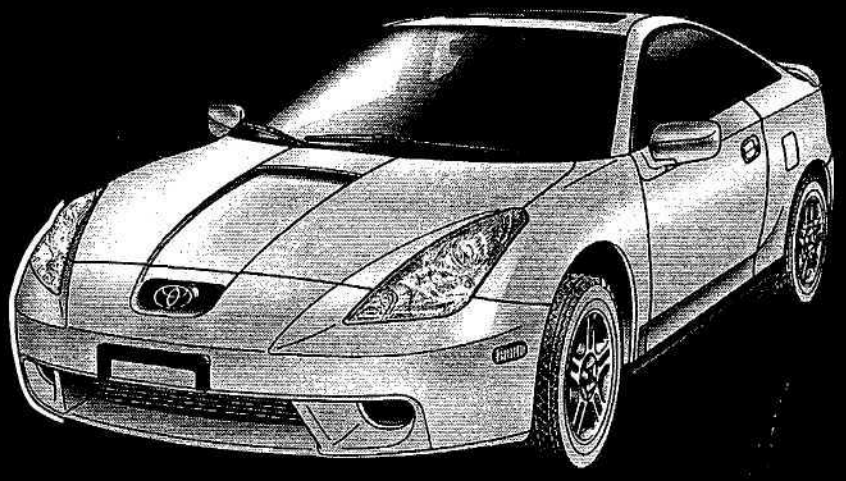

REPAIR MANUAL

- MAINTENANCE
- PREPARATION
- SPECIFICATIONS
- DIAGNOSTICS

Pub. No. RM744U1

VOLUME 1

FOREWORD

This manual (Volume 1) contains maintenance, preparation, specifications and diagnostics procedures for the 2000 CELICA.

Applicable models: ZZT230, 231 series

For repair procedures for the engine, chassis and body, and electrical service procedures, refer to VOLUME 2 (Pub. No. RM744U2).

The manual is divided into 6 sections with a thumb index for each section at the edge of the pages.

Please note that the publications below have also been prepared as relevant service manuals for the components and systems in this vehicles.

Manual Name	Pub. No.
• U240E Automatic Transaxle Repair Manual (Aug., 1999)	RM740U
• U340E, U341E Automatic Transaxle Repair Manual (Aug., 1999)	RM735U
• 2000 CELICA Electrical Wiring Diagram	EWD399U
• 2000 CELICA New Car Features	NCF169U

All information in this manual is based on the latest product information at the time of publication. However, specifications and procedures are subject to change without notice.

TOYOTA MOTOR CORPORATION

©1999 TOYOTA MOTOR CORPORATION
All rights reserved. This book may not be reproduced or copied, in whole or in part, without the written permission of Toyota Motor Corporation.
First Printing: Jul. 14, 199901–990714–00

CAUTION

This manual does not include all the necessary items about repair and service. This manual is made for the purpose of the use for the persons who have special techniques and certifications. In the cases that non-specialized or uncertified technicians perform repair or service only using this manual or without proper equipment or tool, that may cause severe injury to you or other people around and also cause damage to your customer's vehicle.

In order to prevent dangerous operation and damages to your customer's vehicle, be sure to follow the instruction shown below.

- Must read this manual thoroughly. It is especially important to have good understanding all the contents written in the PRECAUTION of "IN" section.
- The service method written in this manual is very effective to perform repair and service. When performing the operations following the procedures using this manual, be sure to use tools specified and recommended. If using non-specified or recommended tools and service method, be sure to confirm safety of the technicians and any possibility of causing personal injury or damage to the customer's vehicle before starting the operation.
- If part replacement is necessary, must replace the part with the same part number or equivalent part. Do not replace it with inferior quality.
- It is important to note that this manual contains various "Cautions" and "Notices" that must be carefully observed in order to reduce the risk of personal injury during service or repair, or the possibility that improper service or repair may damage the vehicle or render it unsafe. It is also important to understand that these "Cautions" and "Notices" are not exhaustive, because it is important to warn of all the possible hazardous consequences that might result from failure to follow these instructions.

NOTE: The screen toned sections below are in VOLUME 2 (Pub. No. RM744U2).

INTRODUCTION IN
MAINTENANCE MA
PREPARATION PP
SERVICE SPECIFICATIONS SS
DIAGNOSTICS DI
ENGINE MECHANICAL EM
EMISSION CONTROL EC
SFI SF
COOLING CO
LUBRICATION LU
IGNITION IG
STARTING ST
CHARGING CH
CLUTCH CL
C56 MANUAL TRANSAXLE MX
C60 MANUAL TRANSAXLE MX
U240E AUTOMATIC TRANSAXLE AX
U341E AUTOMATIC TRANSAXLE AX
SUSPENSION AND AXLE SA
BRAKE BR
STEERING SR
SUPPLEMENTAL RESTRAINT SYSTEM RS
BODY ELECTRICAL BE
BODY BO
AIR CONDITIONING AC
ALPHABETICAL INDEX ID

INTRODUCTION

HOW TO USE THIS MANUAL IN-1
GENERAL INFORMATION IN-1
IDENTIFICATION INFORMATION IN-3
VEHICLE IDENTIFICATION AND ENGINE SERIAL NUMBER IN-3
REPAIR INSTRUCTIONS IN-4
GENERAL INFORMATION IN-4
VEHICLE LIFT AND SUPPORT LOCATIONS . . IN-8
FOR ALL OF VEHICLES IN-10
PRECAUTION IN-10
HOW TO TROUBLESHOOT ECU CONTROLLED SYSTEMS IN-19
GENERAL INFORMATION IN-19
HOW TO PROCEED WITH TROUBLESHOOTING IN-20
HOW TO USE THE DIAGNOSTIC CHART AND INSPECTION PROCEDURE IN-30
TERMS IN-35
ABBREVIATIONS USED IN THIS MANUAL IN-35
GLOSSARY OF SAE AND TOYOTA TERMS . . . IN-40

HOW TO USE THIS MANUAL

IN00U–36

GENERAL INFORMATION

1. INDEX

An INDEX is provided on the first page of each section to guide you to the item to be repaired. To assist you in finding your way through the manual, the section title and major heading are given at the top of every page.

IN

2. PRECAUTION

At the beginning of each section, a PRECAUTION is given that pertains to all repair operations contained in that section.

Read these precautions before starting any repair task.

3. TROUBLESHOOTING

TROUBLESHOOTING tables are included for each system to help you diagnose the problem and find the cause. The fundamentals of how to proceed with troubleshooting are described on page IN–20.

Be sure to read this before performing troubleshooting.

4. PREPARATION

Preparation lists the SST (Special Service Tools), recommended tools, equipment, lubricant and SSM (Special Service Materials) which should be prepared before beginning the operation and explains the purpose of each one.

5. REPAIR PROCEDURES

Most repair operations begin with an overview illustration. It identifies the components and shows how the parts fit together.

Example:

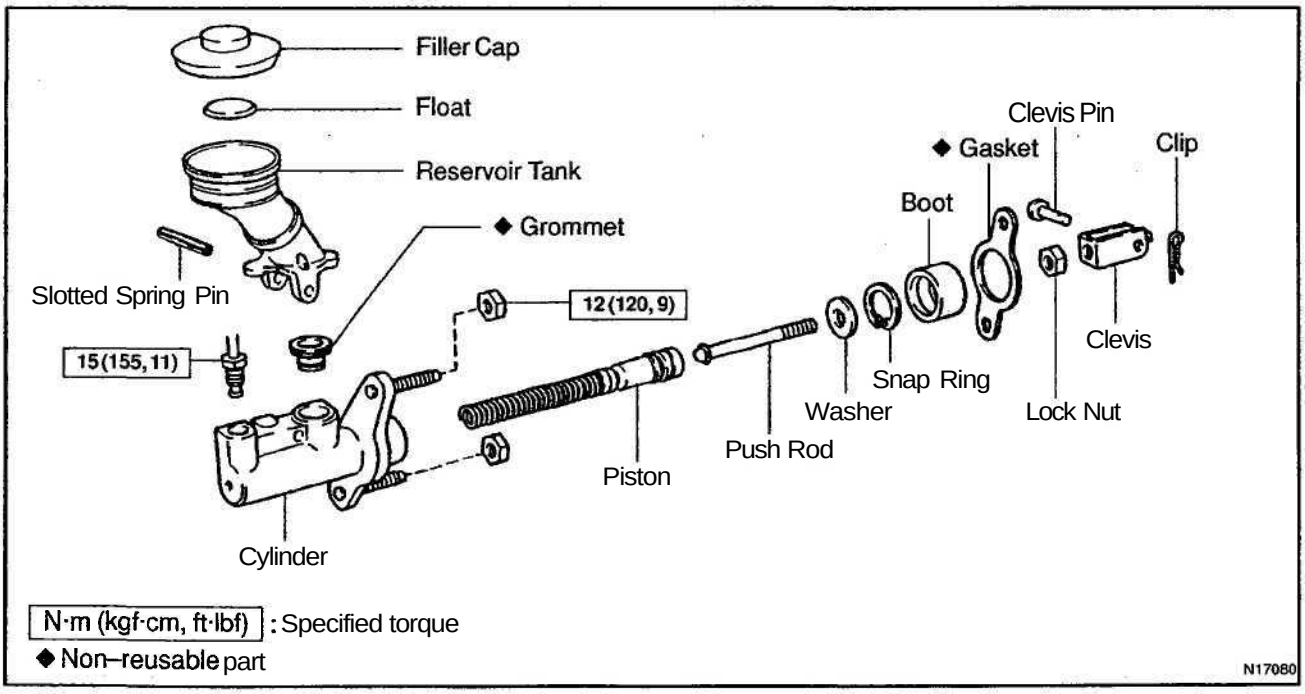

The procedures are presented in a step–by–step format:

- The illustration shows what to do and where to do it.
- The task heading tells what to do.
- The detailed text tells how to perform the task and gives other information such as specifications and warnings.

IN

Example:

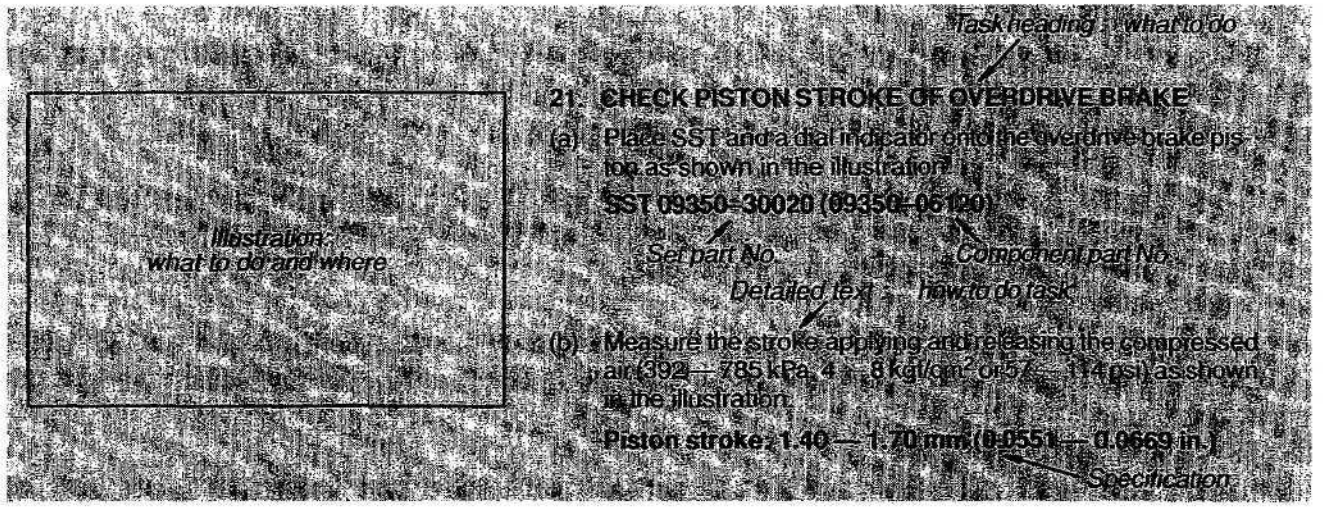

This format provides the experienced technician with a FAST TRACK to the information needed. The upper case task heading can be read at a glance when necessary, and the text below it provides detailed information. Important specifications and warnings always stand out in bold type.

6. REFERENCES

References have been kept to a minimum. However, when they are required you are given the page to refer to.

7. SPECIFICATIONS

Specifications are presented in bold type throughout the text where needed. You never have to leave the procedure to look up your specifications. They are also found in Service Specifications section for quick reference.

8. CAUTIONS, NOTICES, HINTS:

- CAUTIONS are presented in bold type, and indicate there is a possibility of injury to you or other people.
- NOTICES are also presented in bold type, and indicate the possibility of damage to the components being repaired.
- HINTS are separated from the text but do not appear in bold. They provide additional information to help you perform the repair efficiently.

9. SI UNIT

The UNITS given in this manual are primarily expressed according to the SI UNIT (International System of Unit), and **alternately** expressed in the metric system and in the English System.

Example:

Torque: 30 N·m (310 kgf·cm, 22 ft·lbf)

IDENTIFICATION INFORMATION

IN0CN-08

VEHICLE IDENTIFICATION AND ENGINE SERIAL NUMBER

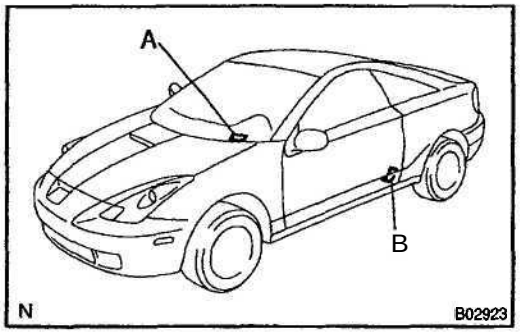

1. VEHICLE IDENTIFICATION NUMBER

The vehicle identification number is stamped on the vehicle identification number plate and the certification label, as shown in the illustration.

A: Vehicle Identification Number Plate
B: Certification Label

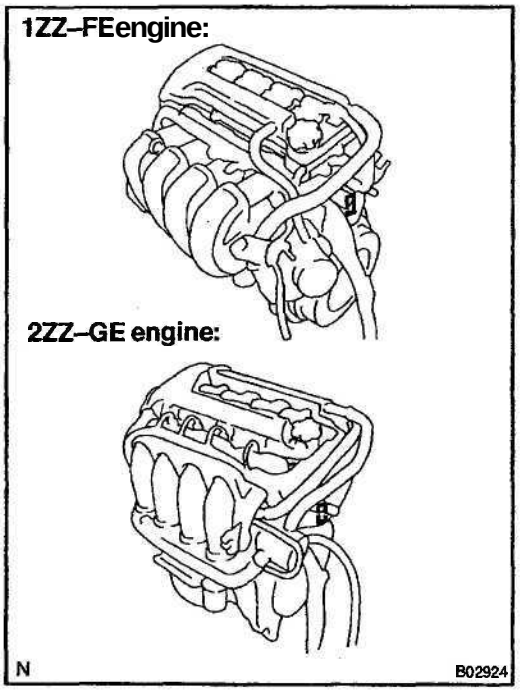

2. ENGINE SERIAL NUMBER

The engine serial number is stamped on the engine block, as shown in the illustration.

IN

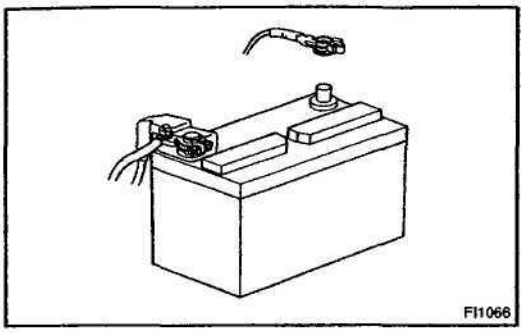
FI1066

REPAIR INSTRUCTIONS

IN0CO-08

GENERAL INFORMATION

BASIC REPAIR HINT

(a) Use fender, seat and floor covers to keep the vehicle clean and prevent damage.

(b) During disassembly, keep parts in the appropriate order to facilitate reassembly.

(c) Installation and removal of battery terminal:

(1) Before performing electrical work, disconnect the negative (-) terminal cable from the battery.

(2) If it is necessary to disconnect the battery for inspection or repair, first disconnect the negative (–) terminal cable.

(3) When disconnecting the terminal cable, to prevent damage to battery terminal, loosen the cable nut and raise the cable straight up without twisting or prying it.

(4) Clean the battery terminals and cable ends with a clean shop rag. Do not scrape them with a file or other abrasive objects.

(5) Install the cable ends to the battery terminals after loosening the nut, and tighten the nut after installation. Do not use a hammer to tap the cable ends onto the terminals.

(6) Be sure the cover for the positive (+) terminal is properly in place.

(d) Check hose and wiring connectors to make sure that they are connected securely and correctly.

(e) Non–reusable parts

(1) Always replace cotter pins, gaskets, O–rings, oil seals, etc. with new ones.

(2) Non-reusable parts are indicated in the component illustrations by the "◆" symbol.

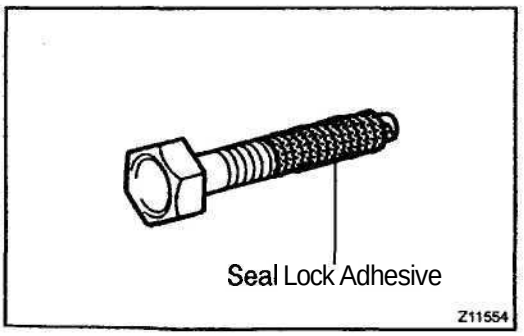

Z11554

(f) Precoated parts

Precoated parts are bolts, nuts, etc. that are coated with a seal lock adhesive at the factory.

(1) If a precoated part is retightened, loosened or caused to move in any way, it must be recoated with the specified adhesive.

(2) When reusing precoated parts, clean off the old adhesive and dry with compressed air. Then apply the specified seal lock adhesive to the bolt, nut or threads.

(3) Precoated parts are indicated in the component illustrations by the "A" symbol.

(g) When necessary, use a sealer on gaskets to prevent leaks.

(h) Carefully observe all specifications for bolt tightening torques. Always use a torque wrench.

(i) Use of special service tools (SST) and special service materials (SSM) may be required, depending on the nature of the repair. Be sure to use SST and SSM where specified and follow the proper work procedure. A list of SST and SSM can be found in Preparation section in this manual.

Medium Current Fuse and High Current Fuse Equal Amperage Rating

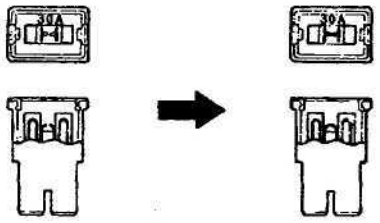

BE1367

(j) When replacing fuses, be sure the new fuse has the correct amperage rating. DO NOT exceed the rating or use one with a lower rating.

Illustration	Symbol	Part Name	Abbreviation
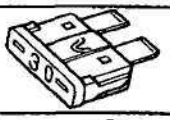 BE5594	IN0365	FUSE	FUSE
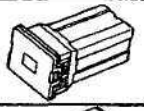 BE5595	 IN0366	MEDIUM CURRENT FUSE	M-FUSE
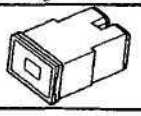 BE5596	 IN0367	HIGH CURRENT FUSE	H-FUSE
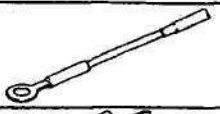 BE5597	 IN0367	FUSIBLE LINK	FL
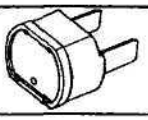 BE5598	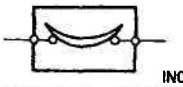 IN0368	CIRCUIT BREAKER	CB

IN

(k) Care must be taken when jacking up and supporting the vehicle. Be sure to lift and support the vehicle at the proper locations (See page IN–8).
- Cancel the parking brake on the level place and shift the transmission in Neutral (or N position).
- When jacking up the front wheels of the vehicle at first place stoppers behind the rear wheels.
- When jacking up the rear wheels of the vehicle at first place stoppers before the front wheels.
- When either the front or rear wheels only should be jacked up, set rigid racks and place stoppers in front and behind the other wheels on the ground.
- After the vehicle is jacked up, be sure to support it on rigid racks . It is extremely dangerous to do any work on a vehicle raised on a jack alone, even for a small job that can be finished quickly.

(l) Observe the following precautions to avoid damage to the following parts:

(1) Do not open the cover or case of the ECU unless absolutely necessary. (If the IC terminals are touched, the IC may be destroyed by static electricity.)

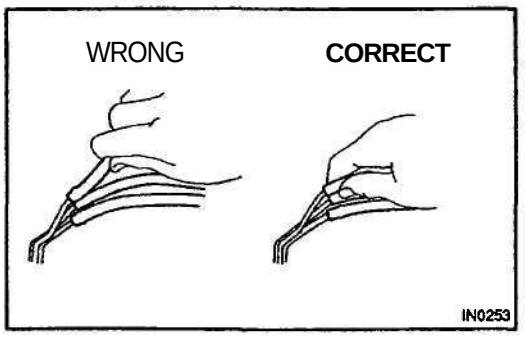

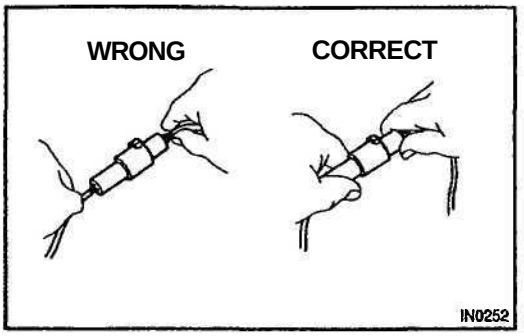

(2) To disconnect vacuum hoses, pull off the end, not the middle of the hose.

(3) To pull apart electrical connectors, pull on the connector itself, not the wires.

(4) Be careful not to drop electrical components, such as sensors or relays. If they are dropped on a hard floor, they should be replaced and not reused.

(5) When steam cleaning an engine, protect the electronic components, air filter and emission–related components from water.

(6) Never use an impact wrench to remove or install temperature switches or temperature sensors.

(7) When checking continuity at the wire connector, insert the tester probe carefully to prevent terminals from bending.

(8) When using a vacuum gauge, never force the hose onto a connector that is too large. Use a step–down adapter for adjustment. Once the hose has been stretched, it may leak air.

Example

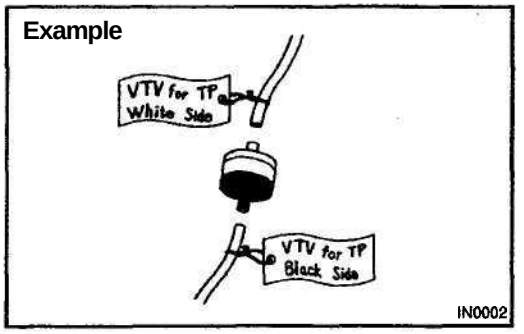

(m) Installation and removal of vacuum hose:
(1) When disconnecting vacuum hoses, use tags to identify how they should be reconnected to.
(2) After completing a job, double check that the vacuum hoses are properly connected. A label under the hood shows the proper layout.

(n) Unless otherwise stated, all resistance is measured at an ambient temperature of 20°C (68°F). Because the resistance may be outside specifications if measured at high temperatures immediately after the vehicle has been running, measurement should be made when the engine has cooled down.

IN0CP–08

VEHICLE LIFT AND SUPPORT LOCATIONS

IN

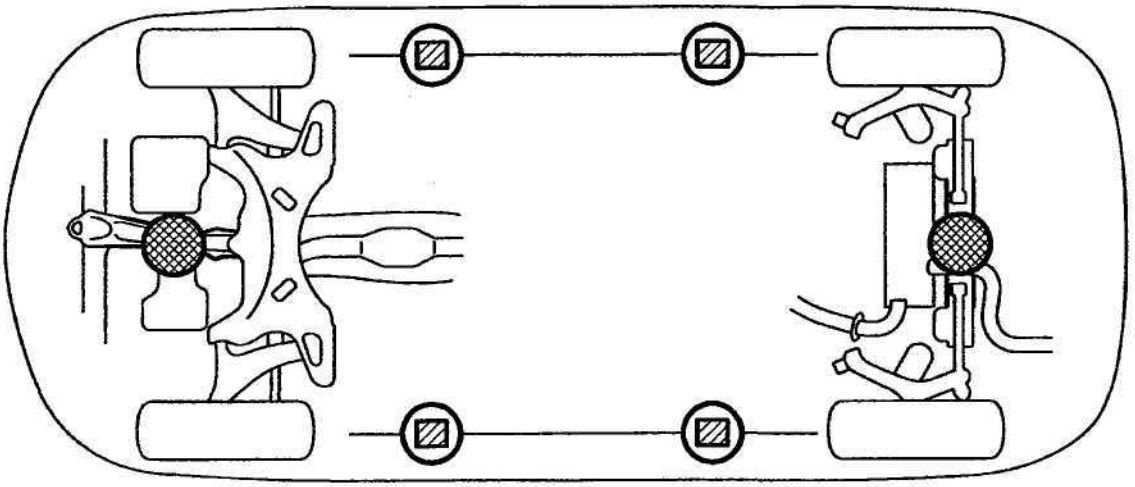

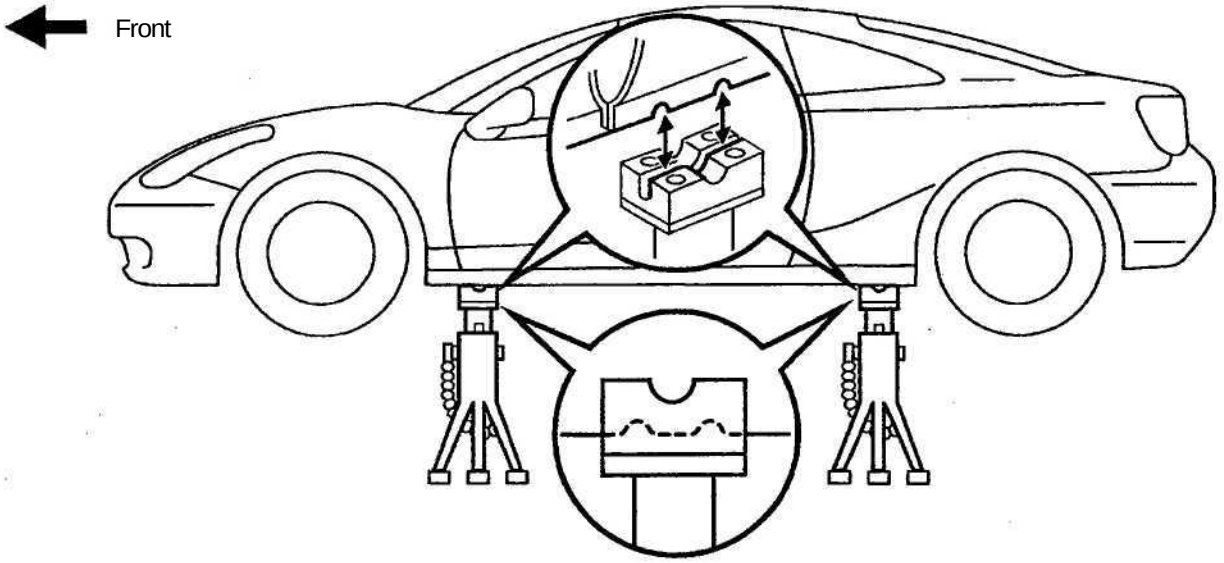

JACK POSITION

Front.....Front crossmember
Rear.....Rear axle beam

CAUTION : When jacking–up the rear and front, make sure the car is not carrying any extra weight.

PANTOGRAPH JACK POSITION O

SUPPORT POSITION

Safety stand and swing arm type lift .....

N

B02925

PLATE TYPE LIFT

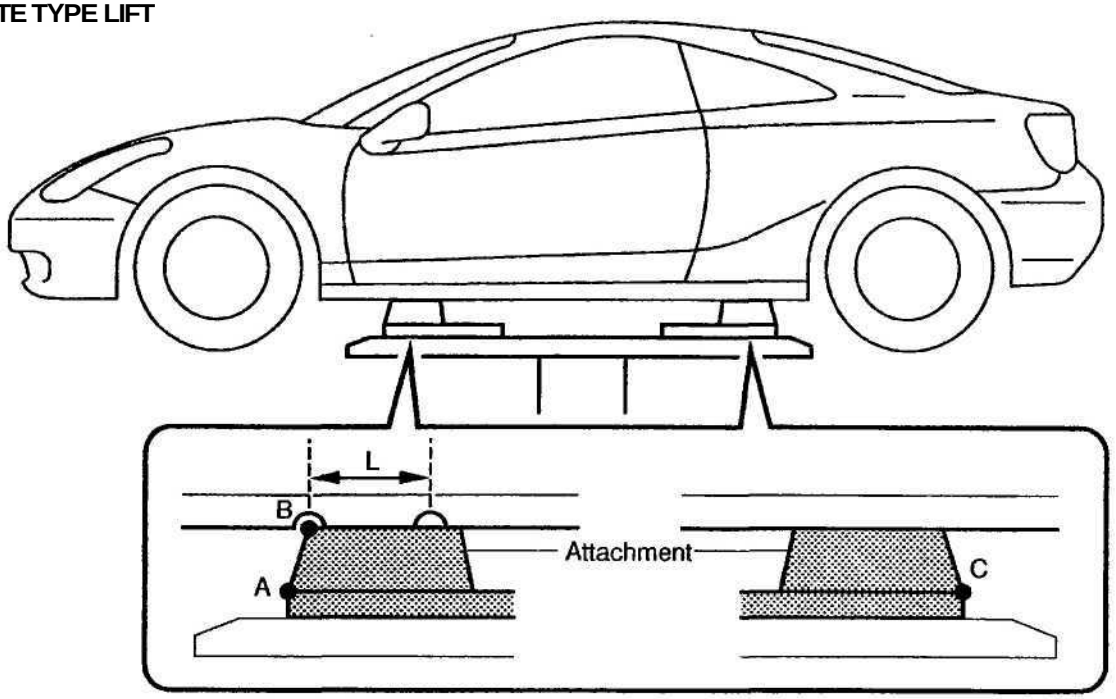

HINT :

Left and right set position	Place the vehicle over the center of the lift.
Front and rear set position	• Align the cushion gum ends of the plate with the attachment lower ends (A, C). • Align the attachment upper end (B) with the front jack supporting point (L).

Attachment dimensions

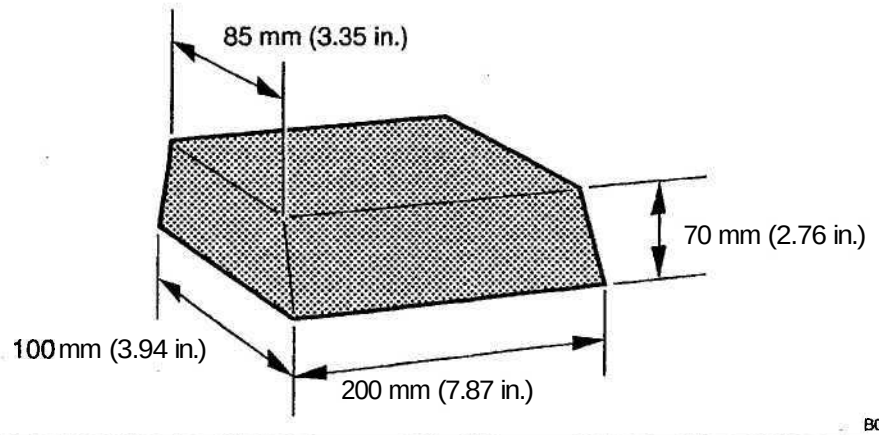

N

B02926

FOR ALL OF VEHICLES

PRECAUTION

IN0FA-01

1. FOR VEHICLES EQUIPPED WITH SRS AIRBAG AND SEAT BELT PRETENSIONER

IN

(a) The CELICA is equipped with an SRS (Supplemental Restraint System), such as the driver airbag, front passenger airbag assembly, side airbag assembly and seat belt pretensioner.

Failure to carry out service operations in the correct sequence could cause the supplemental restraint system to unexpectedly deploy during servicing, possibly leading to a serious accident.

Further, if a mistake is made in servicing the supplemental restraint system, it is possible the SRS may fail to operate when required. Before servicing (including removal or installation of parts, inspection or replacement), be sure to read the following items carefully, then follow the correct procedure described in this manual.

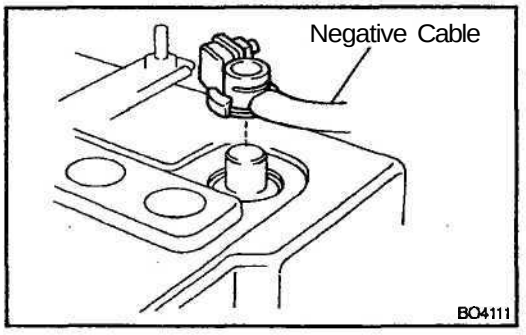

(b) GENERAL NOTICE

(1) Malfunction symptoms of the supplemental restraint system are difficult to confirm, so the diagnostic trouble codes become the most important source of information when troubleshooting. When troubleshooting the supplemental restraint system, always inspect the diagnostic trouble codes before disconnecting the battery (See page DM326).

(2) Work must be started after 90 seconds from the time the ignition switch is turned to the "LOCK" position and the negative (-) terminal cable is disconnected from the battery.

(The supplemental restraint system is equipped with a back-up power source so that if work is started within 90 seconds of disconnecting the negative (-) terminal cable from the battery, the SRS may deploy.)

When the negative (-) terminal cable is disconnected from the battery, memory of the clock and audio systems will be cancelled. So before starting work, make a record of the contents memorized by the each memory system. Then when work is finished, reset the clock and audio systems as before. To avoid erasing the memory of each memory system, never use a back-up power supply from another battery.

(3) Even in cases of a minor collision where the SRS does not deploy, the steering wheel pad, front passenger airbag assembly, side airbag assembly and seat belt pretensioner should be inspected (See page RS–14, RS-28, and BO–111).
(4) Never use SRS parts from another vehicle. When replacing parts, replace them with new parts.
(5) Before repairs, remove the airbag sensor if shocks are likely to be applied to the sensor during repairs.
(6) Never disassemble and repair the airbag sensor assembly, steering wheel pad, front passenger airbag assembly, side airbag assembly or seat belt pretensioner.
(7) If the airbag sensor assembly, steering wheel pad, front passenger airbag assembly, side airbag assembly or seat belt pretensioner has been dropped, or if there are cracks, dents or other defects in the case, bracket or connector, replace them with new ones.
(8) Do not directly expose the airbag sensor assembly, steering wheel pad, front passenger airbag assembly, side airbag assembly or seat belt pretensioner to hot air or flames.
(9) Use a volt/ohmmeter with high impedance (10 kΩ/V minimum) for troubleshooting of the electrical circuit.
(10) Information labels are attached to the periphery of the SRS components. Follow the instructions on the notices.
(11) After work on the supplemental restraint system is completed, check the SRS warning light (See page DI–326).

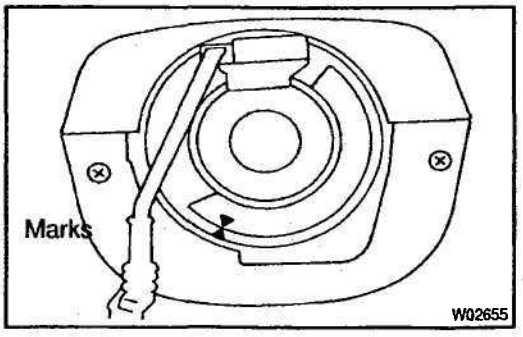

(c) SPIRAL CABLE (in Combination Switch)
The steering wheel must be fitted correctly to the steering column with the spiral cable at the neutral position, otherwise cable disconnection and other troubles may result. Refer to SR–19 of this manual concerning correct steering wheel installation.

(d) STEERING WHEEL PAD (with Airbag)

(1) When removing the steering wheel pad or handling a new steering wheel pad, it should be placed with the pad top surface facing up.
Storing the pad with its metallic surface facing upward may lead to a serious accident if the airbag deploys for some reason. In addition do not store a steering wheel pad on top of another one.

(2) Never measure the resistance of the airbag squib. (This may cause the airbag to deploy, which is very dangerous.)

(3) Grease should not be applied to the steering wheel pad and the pad should not be cleaned with detergents of any kind.

(4) Store the steering wheel pad where the ambient temperature remains below 93°C (200°F), without high humidity and away from electrical noise.

(5) When using electric welding, first disconnect the airbag connector (yellow color and 2 pins) under the steering column near the combination switch connector before starting work.

(6) When disposing of a vehicle or the steering wheel pad alone, the airbag should be deployed using an SST before disposal (See page RS–16).
Carry out the operation in a safe place away from electrical noise.

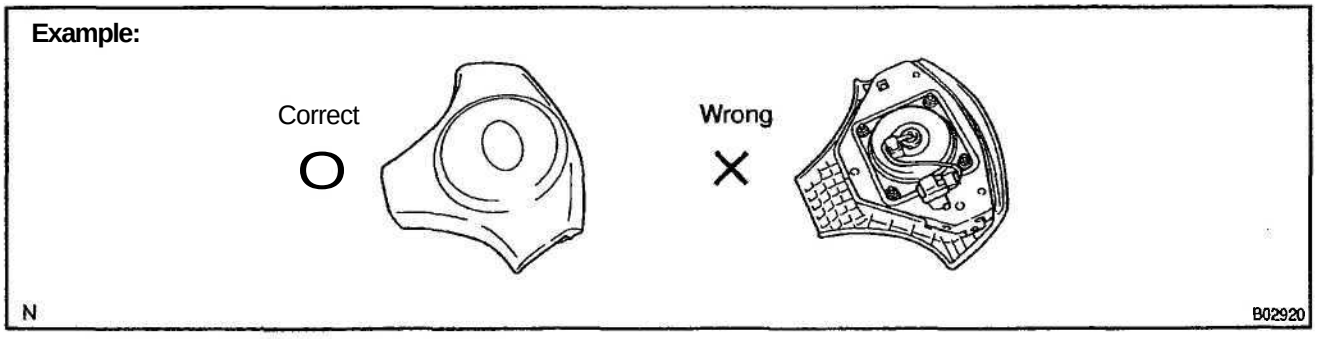

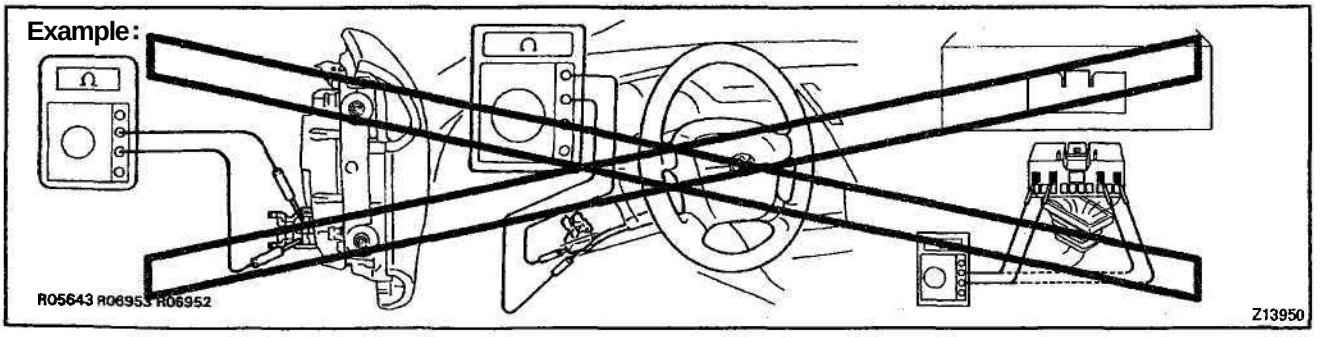

(e) FRONT PASSENGER AIRBAG ASSEMBLY

(1) Always store a removed or new front passenger airbag assembly with the airbag deployment direction facing up.
Storing the airbag assembly with the airbag deployment direction facing down could cause a serious accident if the airbag inflates.

(2) Never measure the resistance of the airbag squib. (This may cause the airbag to deploy, which is very dangerous.)

(3) Grease should not be applied to the front passenger airbag assembly and the airbag door should not be cleaned with detergents of any kind.

(4) Store the airbag assembly where the ambient temperature remains below 93°C (200°F), without high humidity and away from electrical noise.

(5) When using electric welding, first disconnect the airbag connector (yellow color and 2 pins) installed on the assembly before starting work.

(6) When disposing of a vehicle or the airbag assembly alone, the airbag should be deployed using an SST before disposal (See page RS–30).
Perform the operation in a safe place away from electrical noise.

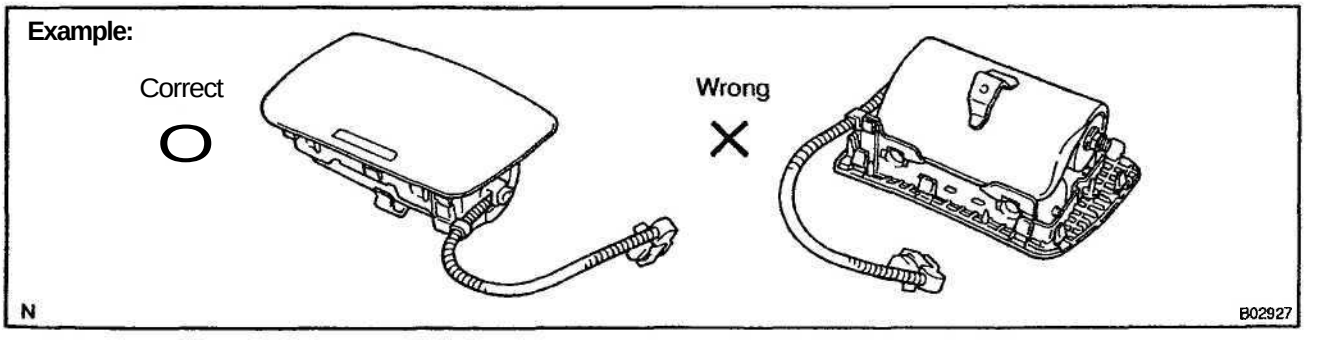

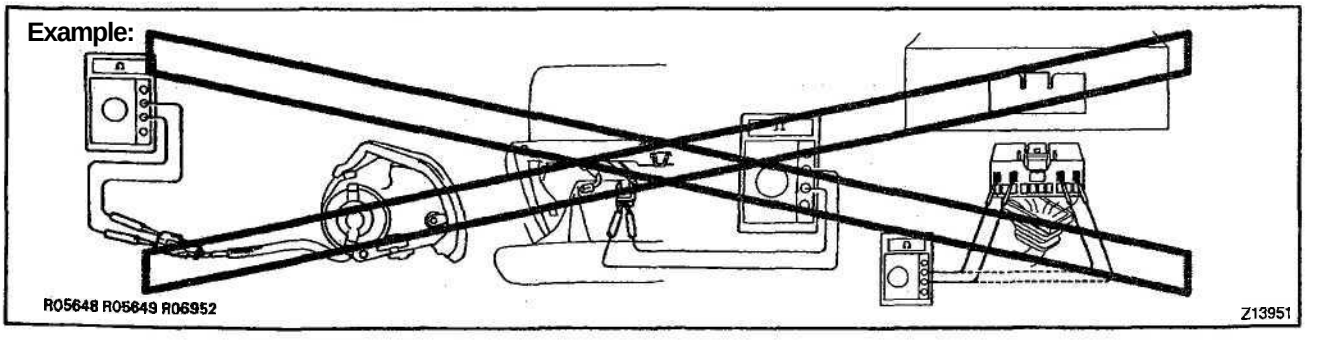

(f) SIDE AIRBAG ASSEMBLY

(1) Always store a removed or new side airbag assembly with the airbag deployment direction facing up. Storing the airbag assembly with the airbag deployment direction facing down could cause a serious accident if the airbag deploys.

(2) Never measure the resistance of the airbag squib. (This may cause the airbag to deploy, which is very dangerous.)

(3) Grease should not be applied to the side airbag assembly and the surface should not be cleaned with detergents of any kind.

(4) Store the airbag assembly where the ambient temperature remains below 93°C (200°F), without high humidity and away from electrical noise.

(5) When using electric welding, first disconnect the airbag connector (yellow color and 2 pins) under the seat before starting work.

(6) When disposing of a vehicle or the side airbag assembly alone, the airbag should be deployed using an SST before disposal (See page RS–43). Perform the operation in a safe place away from electrical noise.

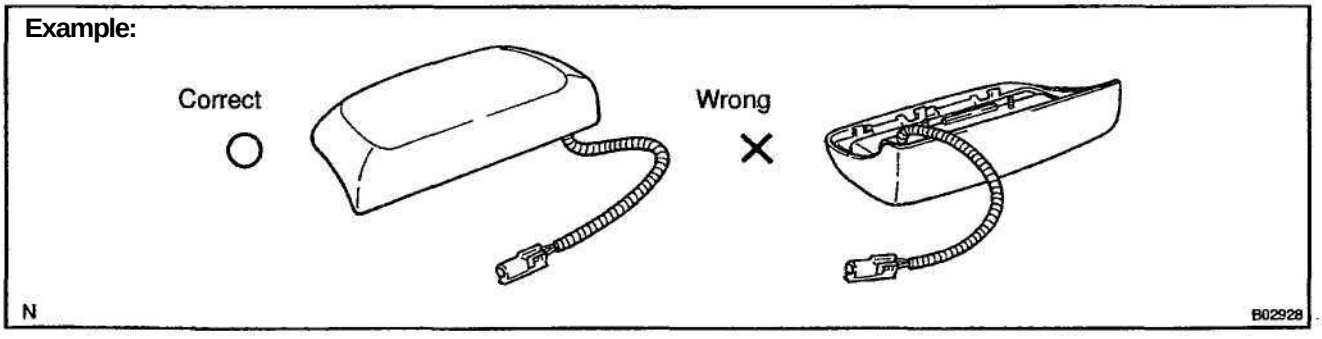

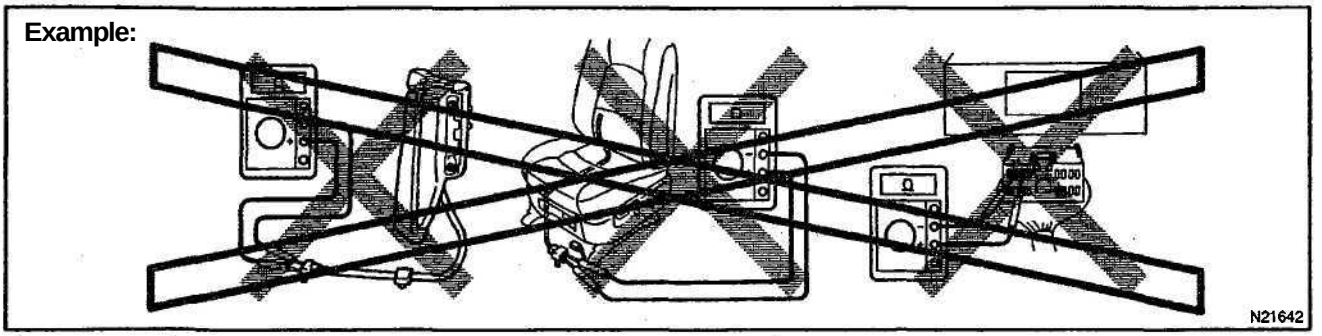

(g) SEAT BELT PRETENSIONER

(1) Never measure the resistance of the seat belt pretensioner. (This may cause the seat belt pretensioner to activate, which is very dangerous.)

(2) Never disassemble the seat belt pretensioner.

(3) Never install the seat belt pretensioner in another vehicle.

(4) Store the seat belt pretensioner where the ambient temperature remains below 80°C (176°F) and away from electrical noise without high humidity.

(5) When using electric welding, first disconnect the connector (yellow color and 2 pins) before starting work.

(6) When disposing of a vehicle or the seat belt pretensioner alone, the seat belt pretensioner should be activated before disposal (See page BO–112). Perform the operation in a safe place away from electrical noise.

(7) The seat belt pretensioner is hot after activation, so let it cool down sufficiently before the disposal. However never apply water to the seat belt pretensioner.

Example:

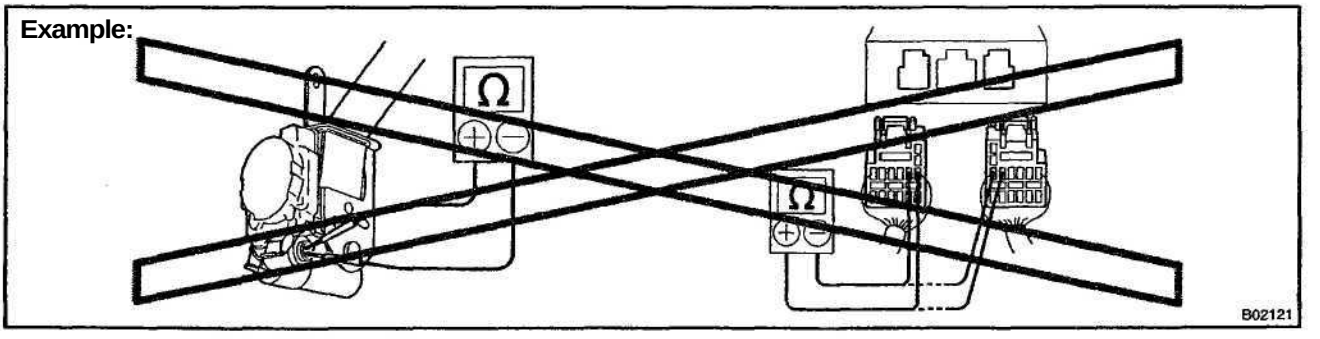

(h) AIRBAG SENSOR ASSEMBLY

(1) Never reuse the airbag sensor assembly involved in a collision when the SRS has deployed.

(2) The connectors to the airbag sensor assembly should be connected or disconnected with the sensor mounted on the floor. If the connectors are connected or disconnected while the airbag sensor assembly is not mounted to the floor, it could cause undesired ignition of the supplemental restraint system.

(3) Work must be started after 90 seconds from the time the ignition switch is turned to the "LOCK" position and the negative (-) terminal cable is disconnected from the battery, even if only loosing the set bolts of the airbag sensor assembly.

(i) WIRE HARNESS AND CONNECTOR

The SRS wire harness is integrated with the instrument panel wire harness assembly. All the connectors in the system are a standard yellow color. If the SRS wire harness becomes disconnected or the connector becomes broken due to an accident, etc., repair or replace it as shown on page RS–72.

2. FOR VEHICLES EQUIPPED WITH A CATALYTIC CONVERTER

CAUTION:

If large amount of unburned gasoline flows into the converter, it may overheat and create a fire hazard. To prevent this, observe the following precautions and explain them to your customer.

(a) Use only unleaded gasoline.

(b) Avoid prolonged idling.
Avoid running the engine at idle speed for more than 20 minutes.

(c) Avoid spark jump test.
(1) Perform spark jump test only when absolutely necessary. Perform this test as rapidly as possible.
(2) While testing, never race the engine.

(d) Avoid prolonged engine compression measurement.
Engine compression tests must be done as rapidly as possible.

(e) Do not run engine when fuel tank is nearly empty.
This may cause the engine to misfire and create an extra load on the converter.

(f) Avoid coasting with ignition turned off.

(g) Do not dispose of used catalyst along with parts contaminated with gasoline or oil.

3. IF VEHICLE IS EQUIPPED WITH MOBILE COMMUNICATION SYSTEM

For vehicles with mobile communication systems such as two–way radios and cellular telephones, observe the following precautions.

(1) Install the antenna as far as possible away from the ECU and sensors of the vehicle's electronic system.

(2) Install the antenna feeder at least 20 cm (7.87 in.) away from the ECU and sensors of the vehicle's electronic systems. For details about ECU and sensors locations, refer to the section on the applicable component.

(3) Avoid winding the antenna feeder together with other wiring as much as possible, and also avoid running the antenna feeder parallel with other wire harnesses.

(4) Check that the antenna and feeder are correctly adjusted.

(5) Do not install powerful mobile communications system.

4. FOR USING OBD II SCAN TOOL OR TOYOTA HAND–HELD TESTER

CAUTION:

Observe the following items for safety reasons:

- **Before using the OBD II scan tool or TOYOTA hand–held tester, the OBD II scan tool's instruction book or TOYOTA hand–held tester's operator manual should be read thoroughly.**
- **Be sure to route all cables securely when driving with the OBD II scan tool or TOYOTA hand–held tester connected to the vehicle. (i.e. Keep cables away from feet, pedals, steering wheel and shift lever.)**
- **Two persons are required when test driving with the OBD II scan tool or TOYOTA hand–held tester, one person to drive the vehicle and the other person to operate the OBD II scan tool or TOYOTA hand–held tester.**

HOW TO TROUBLESHOOT ECU CONTROLLED SYSTEMS

GENERAL INFORMATION

INOSY-18

A large number of ECU controlled systems are used in the CELICA. In general, the ECU controlled system is considered to be a very intricate system requiring a high level of technical knowledge and expert skill to troubleshoot. However, the fact is that if you proceed to inspect the circuits one by one, troubleshooting of these systems is not complex. If you have adequate understanding of the system and a basic knowledge of electricity, accurate diagnosis and necessary repair can be performed to locate and fix the problem. This manual is designed through emphasis of the above standpoint to help service technicians perform accurate and effective troubleshooting, and is compiled for the following major ECU controlled systems:
The troubleshooting procedure and how to make use of it are described on the following pages.

System	Page
1. Engine	DM
2. U240E Automatic Transaxle	DM55
3. U341E Automatic Transaxle	DI-218
4. Anti-Lock Brake System with Electronic Brake Force Distribution (EBD)	DI-274
5. Supplemental Restraint System	DI-324
6. Cruise Control System	DM83
7. Body Control system	DI-535

FOR USING OBD II SCAN TOOL OR TOYOTA HAND-HELD TESTER

- Before using the scan tool or tester, the scan tool's instruction book or tester's operator manual should be read thoroughly.
- If the scan tool or tester cannot communicate with ECU controlled systems when you have connected the cable of the scan tool or tester to DLC3, turned the ignition switch ON and operated the scan tool, there is a problem on the vehicle side or tool side.
  (1) If communication is normal when the tool is connected to another vehicle, inspect the diagnosis data link line (Bus⊕line) or ECU power circuit of the vehicle.
  (2) If communication is still not possible when the tool is connected to another vehicle, the problem is probably in the tool itself, so perform the Self Test procedures outline in the Tester Operator's Manual.

HOW TO PROCEED WITH TROUBLESHOOTING

Carry out troubleshooting in accordance with the procedure on the following page. Here, only the basic procedure is shown. Details are provided in Diagnostics section, showing the most effective methods for each circuit. Confirm the troubleshooting procedures first for the relevant circuit before beginning troubleshooting of that circuit.

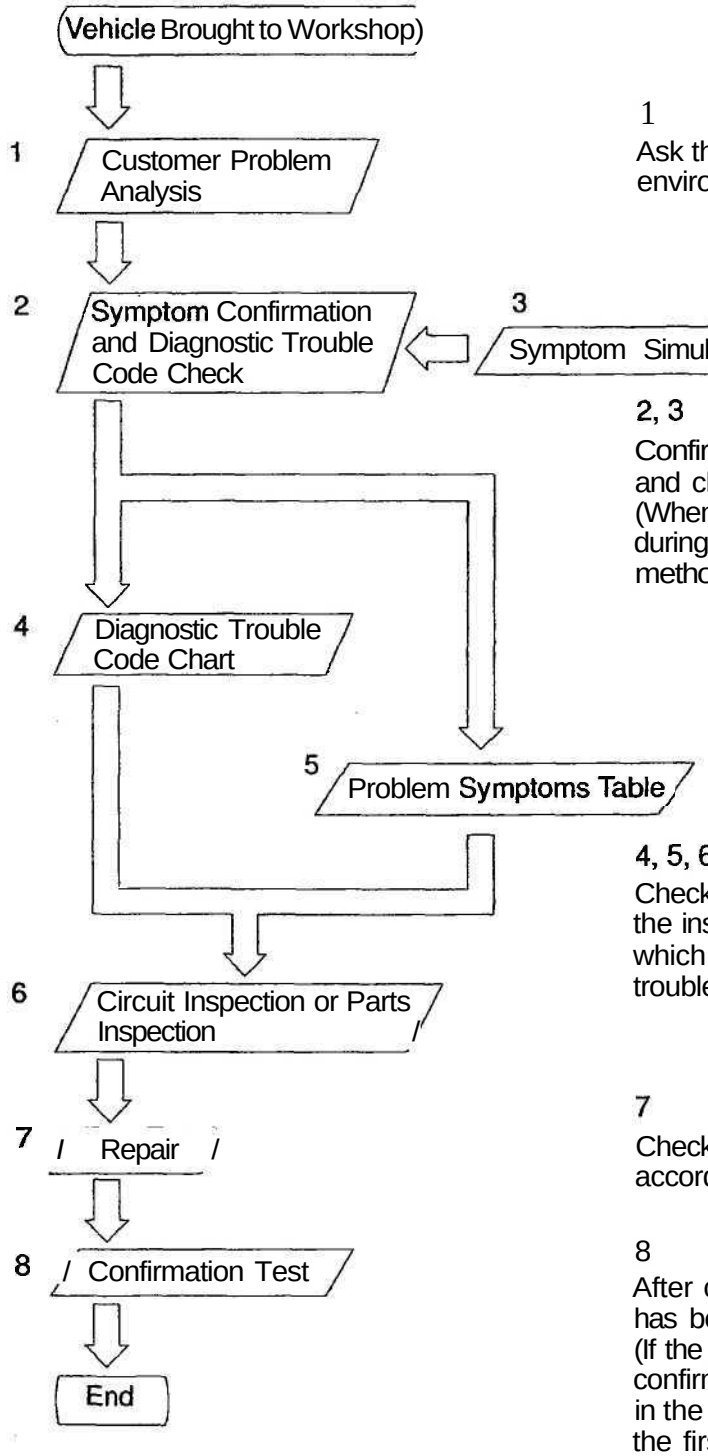

1
Ask the customer about the conditions and the environment when the problem occurred.

2, 3
Confirm the symptoms and the problem conditions, and check the diagnostic trouble codes.
(When the problem symptoms do not appear during confirmation, use the symptom simulation method described later on.)

4, 5, 6
Check the results obtained in Step 2, then confirm the inspection procedure for the system or the part which should be checked using the diagnostic trouble code chart or the problem symptoms table.

7
Check and repair the affected system or part in accordance with the instructions in Step 6.

8
After completing repairs, confirm that the problem has been eliminated.
(If the problem is not reproduced, perform the confirmation test under the same conditions and in the same environment as when it occurred for the first time.)

1. CUSTOMER PROBLEM ANALYSIS

In troubleshooting, the problem symptoms must be confirmed accurately and all preconceptions must be cleared away in order to give an accurate judgment. To ascertain just what the problem symptoms are, it is extremely important to ask the customer about the problem and the conditions at the time it occurred.

Important Point in the Problem Analysis:

The following 5 items are important points in the problem analysis. Past problems which are thought to be unrelated and the repair history, etc. may also help in some cases, so as much information as possible should be gathered and its relationship with the problem symptoms should be correctly ascertained for reference in troubleshooting. A customer problem analysis table is provided in Diagnostics section for each system for your use.

Important Points in the Customer Problem Analysis

- What——Vehicle model, system name
- When——Date, time, occurrence frequency
- Where——Road conditions
- Under what conditions? ——Running conditions, driving conditions, weather conditions
- How did it happen?——Problem symptoms

(Sample) Engine control system check sheet.

CUSTOMER PROBLEM **ANALYSIS** CHECK

ENGINE CONTROL SYSTEM Check Sheet

Inspector's Name

Customer's Name		Model and Model Year	
Driver's Name		Frame No.	
Data Vehicle Brought in		Engine Model	
License No.		Odometer Reading	km miles

Problem Symptoms		
	☐ Engine does not Start	D Engine does not crank D No initial combustion D No complete combustion
	D Difficult to Start	D Engine cranks slowly ☐ Other _____
	☐ Poor Idling	D Incorrect first idle ☐ Idling rpm is abnormal ☐ High (rpm) ☐ Low (rpm) D Rough idling D Other _____
	☐ Poor Drive ability	D Hesitation D Back fire ☐ Muffler explosion (after-fire) O Surging ☐ Knocking D Other _____
	D Engine Stall	D Soon after starting O After accelerator pedal depressed D After accelerator pedal released O During A/C operation D Shifting from N to D ☐ Other _____
	☐ Others	

☐ Constant ☐ Sometimes (times per day/month)

2. SYMPTOM CONFIRMATION AND DIAGNOSTIC TROUBLE CODE CHECK

The diagnostic system in the CELICA fulfills various functions. The first function is the Diagnostic Trouble Code Check in which a malfunction in the signal circuits to the ECU is stored in code in the ECU memory at the time of occurrence, to be output by the technician during troubleshooting. Another function is the Input Signal Check which checks if the signals from various switches are sent to the ECU correctly.

By using these check functions, the problem areas can be narrowed down quickly and troubleshooting can be performed effectively. Diagnostic functions are incorporated in the following systems in the CELICA.

System	Diagnostic Trouble Code Check	Input Signal Check (Sensor Check)	Diagnostic Test Mode (Active Test)
Engine	O (with Check Mode)	O	O
Automatic Transaxle (U240E)	O (with Check Mode)	O	
Automatic Transaxle (U341E)	O (with Check Mode)	O	
Anti-Lock Brake System with Electronic Brake Force Distribution (EBD)	O	O	O
Supplemental Restraint System	O		
Cruise Control System	O		
Body Control System	O		

In diagnostic trouble code check, it is very important to determine whether the problem indicated by the diagnostic trouble code is still occurring or occurred in the past but returned to normal at present. In addition, it must be checked in the problem symptom check whether the malfunction indicated by the diagnostic trouble code is directly related to the problem symptom or not. For this reason, the diagnostic trouble codes should be checked before and after the symptom confirmation to determine the current conditions, as shown in the table below. If this is not done, it may, depending on the case, result in unnecessary troubleshooting for normally operating systems, thus making it more difficult to locate the problem, or in repairs not pertinent to the problem. Therefore, always follow the procedure in correct order and perform the diagnostic trouble code check.

DIAGNOSTIC TROUBLE CODE CHECK PROCEDURE

Diagnostic Trouble Code Check (Make a note of and then clear)	Confirmation of Symptoms	Diagnostic Trouble Code Check	Problem Condition
Diagnostic Trouble Code Display	Problem symptoms exist	Same diagnostic trouble code is displayed	Problem is still occurring in the diagnostic circuit
		Normal code is displayed	The problem is still occurring in a place other than in the diagnostic circuit (The diagnostic trouble code displayed first is either for a past problem or it is a secondary problem)
	No problem symptoms exist		The problem occurred in the diagnostic circuit in the past
Normal Code Display	Problem symptoms exist	Normal code is displayed	The problem is still occurring in a place other than in the diagnostic circuit
	No problem symptoms exist	Normal code is displayed	The problem occurred in a place other than in the diagnostic circuit in the past

Taking into account the points on the previous page, a flow chart showing how to proceed with troubleshooting using the diagnostic trouble code check is shown below. This flow chart shows how to utilize the diagnostic trouble code check effectively, then by carefully checking the results, indicates how to proceed either to diagnostic trouble code troubleshooting or to troubleshooting of problem symptoms table.

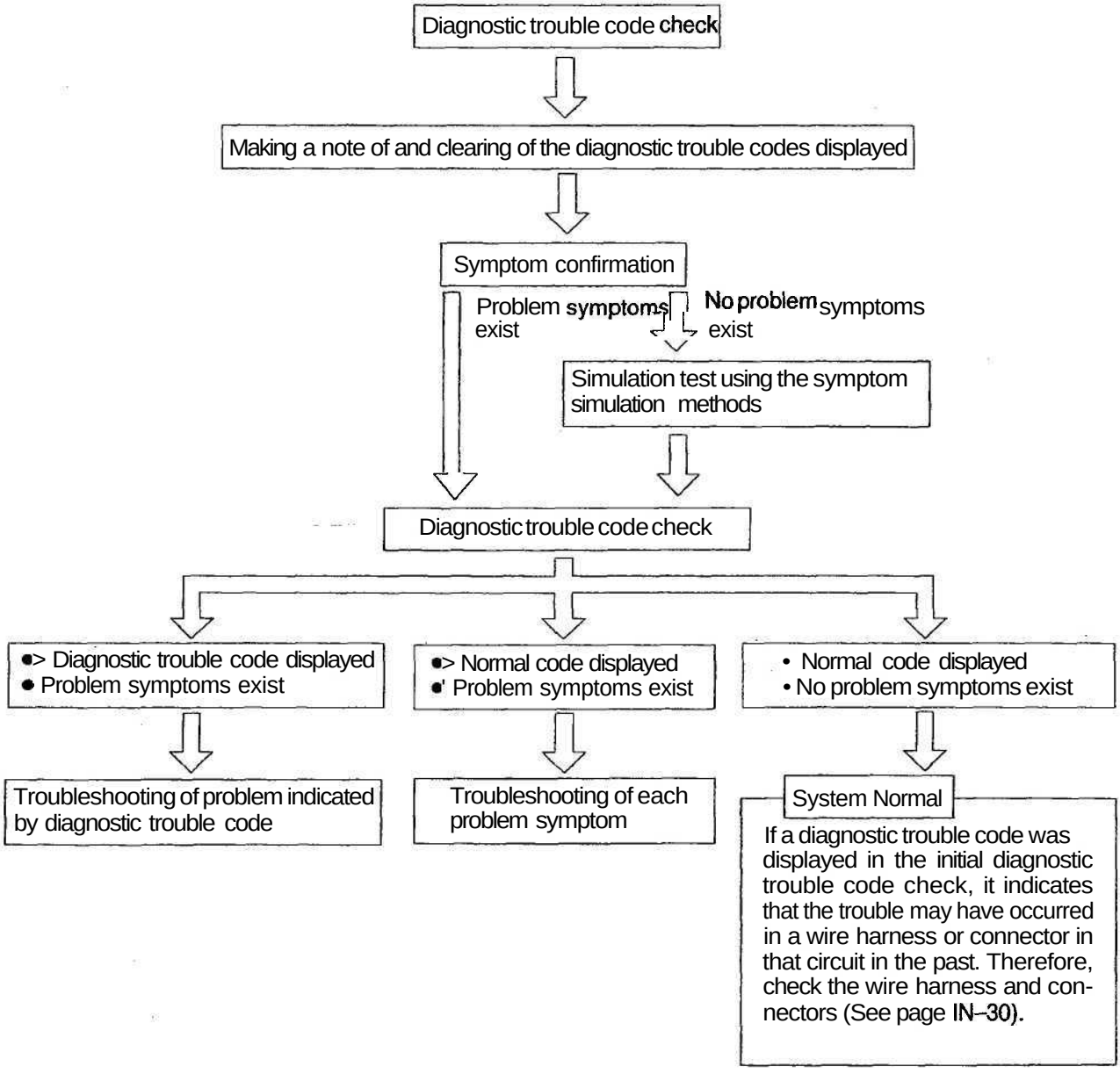

4. DIAGNOSTIC TROUBLE CODE CHART

The inspection procedure is shown in the table below. This table permits efficient and accurate troubleshooting using the diagnostic trouble codes displayed in the diagnostic trouble code check. Proceed with troubleshooting in accordance with the inspection procedure given in the diagnostic chart corresponding to the diagnostic trouble codes displayed. The engine diagnostic trouble code chart is shown below as an example.

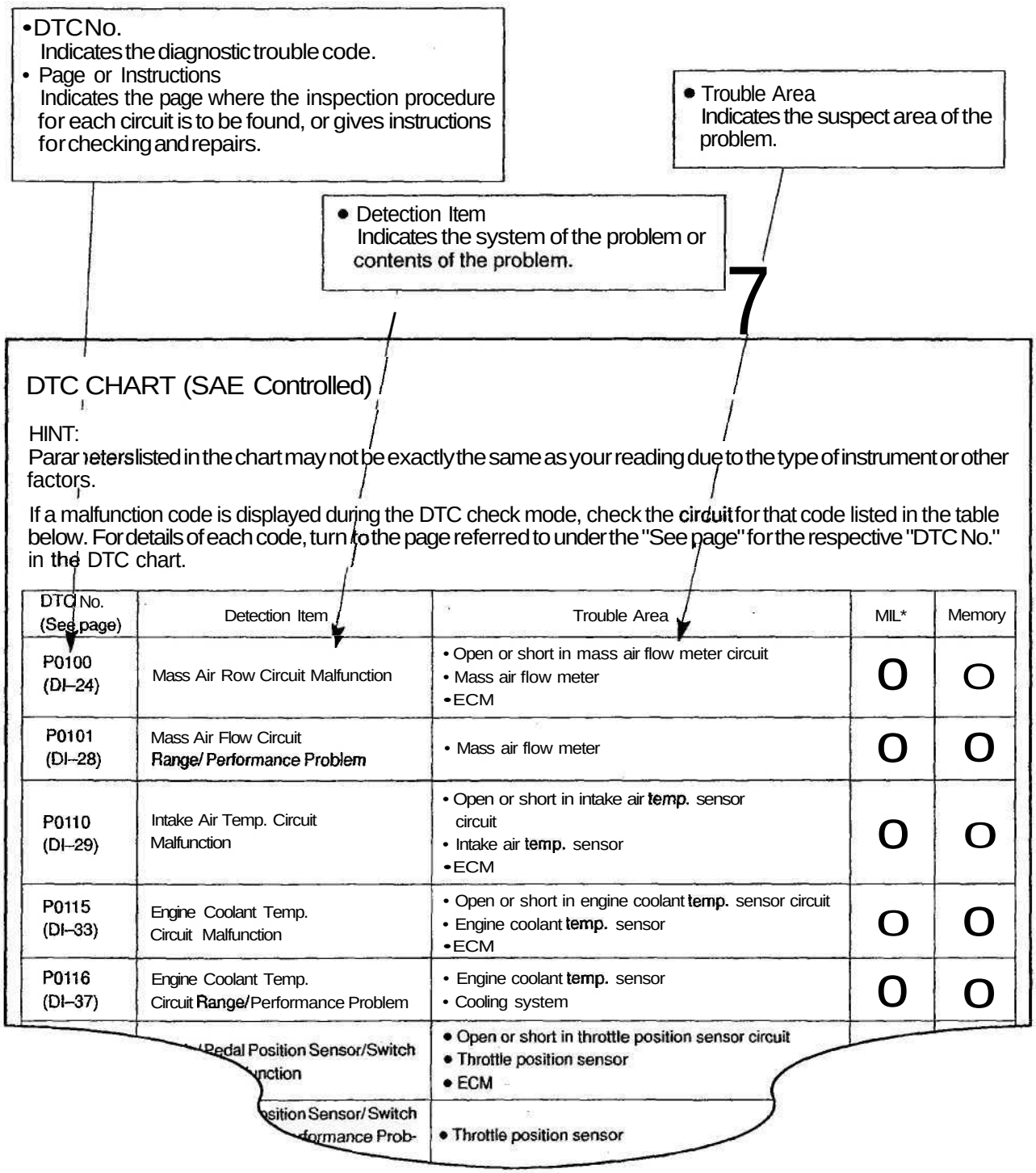

DTC CHART (SAE Controlled)

HINT:
Parameters listed in the chart may not be exactly the same as your reading due to the type of instrument or other factors.

If a malfunction code is displayed during the DTC check mode, check the circuit for that code listed in the table below. For details of each code, turn to the page referred to under the "See page" for the respective "DTC No." in the DTC chart.

DTC No. (See page)	Detection Item	Trouble Area	MIL*	Memory
P0100 (DI–24)	Mass Air Row Circuit Malfunction	• Open or short in mass air flow meter circuit • Mass air flow meter • ECM	O	O
P0101 (DI–28)	Mass Air Flow Circuit Range/ Performance Problem	• Mass air flow meter	O	O
P0110 (DI–29)	Intake Air Temp. Circuit Malfunction	• Open or short in intake air temp. sensor circuit • Intake air temp. sensor • ECM	O	O
P0115 (DI–33)	Engine Coolant Temp. Circuit Malfunction	• Open or short in engine coolant temp. sensor circuit • Engine coolant temp. sensor • ECM	O	O
P0116 (DI–37)	Engine Coolant Temp. Circuit Range/Performance Problem	• Engine coolant temp. sensor • Cooling system	O	O
	Pedal Position Sensor/Switch unction	• Open or short in throttle position sensor circuit • Throttle position sensor • ECM		
	sition Sensor/ Switch formance Prob-	• Throttle position sensor		

5. PROBLEM SYMPTOMS TABLE

The suspected circuits or parts for each problem symptom are shown in the table below. Use this table to troubleshoot the problem when a "Normal" code is displayed in the diagnostic trouble code check but the problem is still occurring. Numbers in the table indicate the inspection order in which the circuits or parts should be checked.

HINT:

When the problem is not detected by the diagnostic system even though the problem symptom is present, it is considered that the problem is occurring outside the detection range of the diagnostic system, or that the problem is occurring in a system other than the diagnostic system.

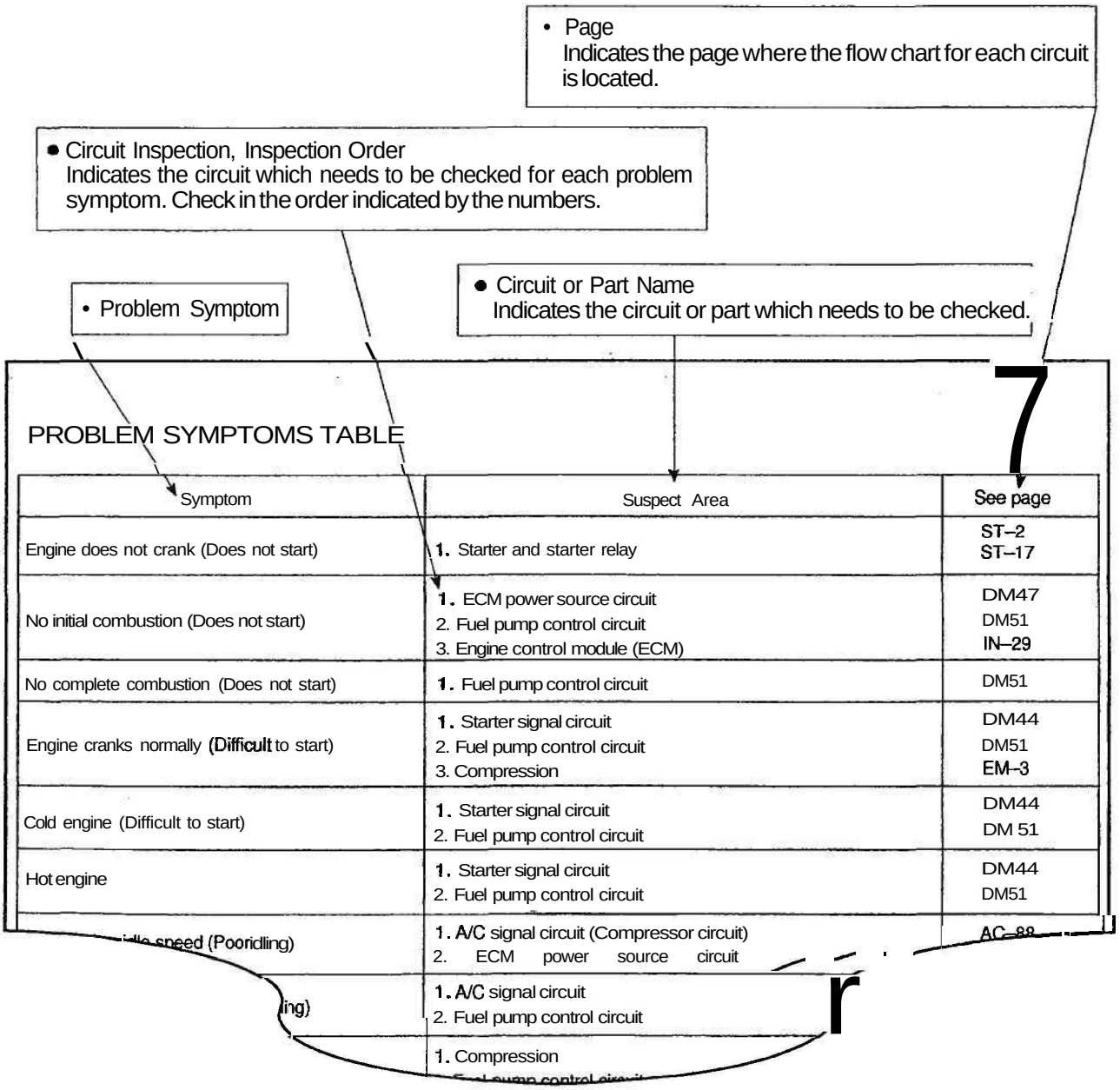

PROBLEM SYMPTOMS TABLE

Symptom	Suspect Area	See page
Engine does not crank (Does not start)	1. Starter and starter relay	ST–2 ST–17
No initial combustion (Does not start)	1. ECM power source circuit 2. Fuel pump control circuit 3. Engine control module (ECM)	DM47 DM51 IN–29
No complete combustion (Does not start)	1. Fuel pump control circuit	DM51
Engine cranks normally (Difficult to start)	1. Starter signal circuit 2. Fuel pump control circuit 3. Compression	DM44 DM51 EM–3
Cold engine (Difficult to start)	1. Starter signal circuit 2. Fuel pump control circuit	DM44 DM 51
Hot engine	1. Starter signal circuit 2. Fuel pump control circuit	DM44 DM51
...idle speed (Poor idling)	1. A/C signal circuit (Compressor circuit) 2. ECM power source circuit	AC–88
...ling)	1. A/C signal circuit 2. Fuel pump control circuit	
	1. Compression ...control circuit	

6. CIRCUIT INSPECTION

How to read and use each page is shown below.

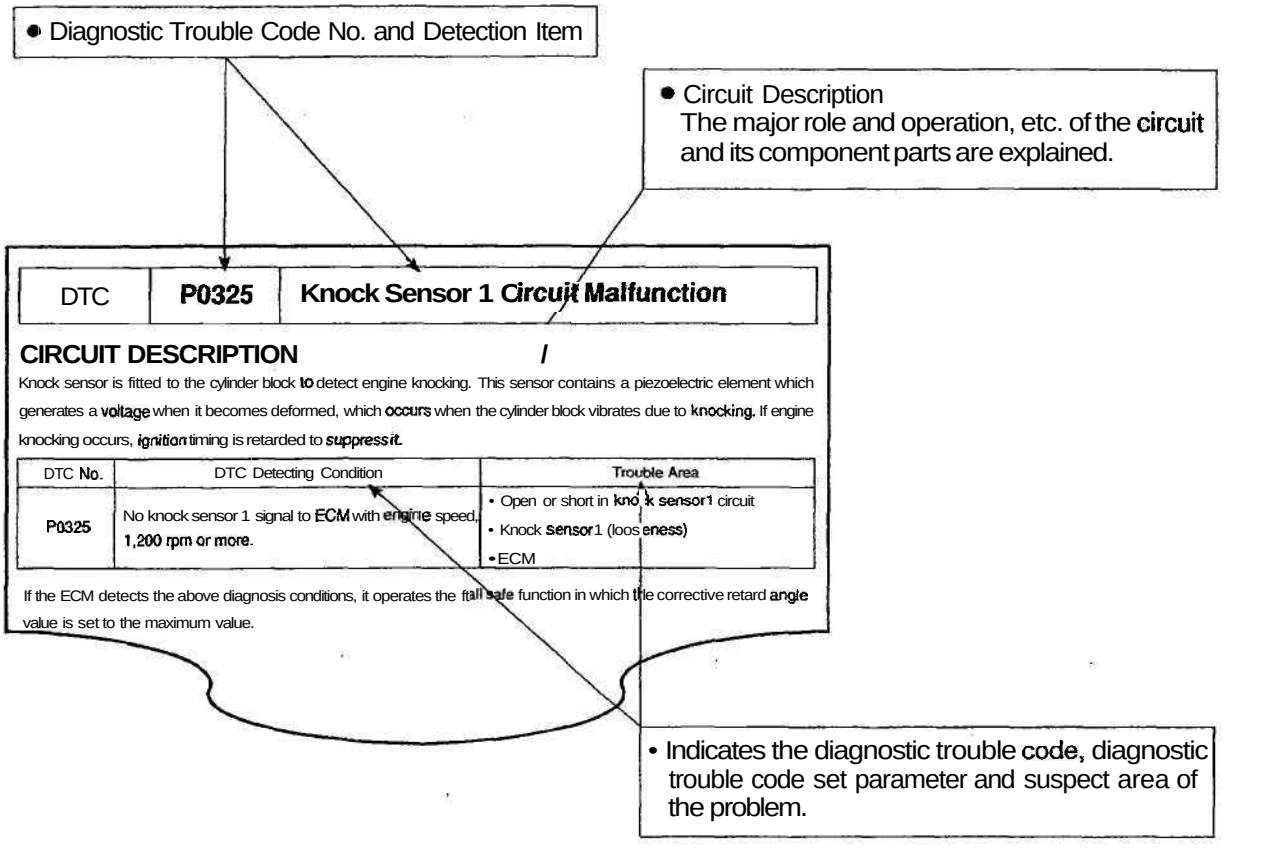

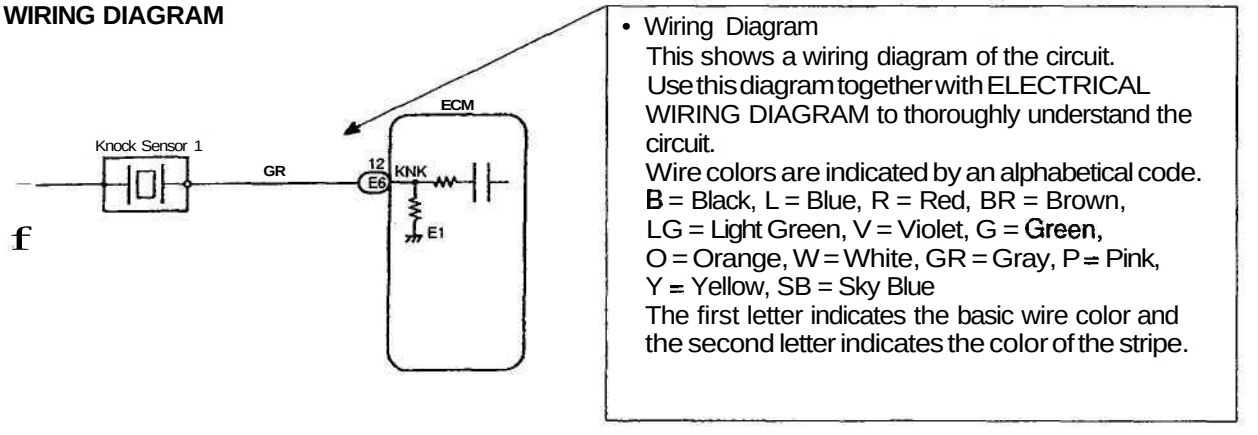

V08423

• Indicates the position of the ignition switch during the check.

LOCK
Ignition Switch LOCK (OFF)

ON
Ignition Switch ON

START
Ignition Switch START

ACC
Ignition Switch ACC

• Inspection Procedure
Use the inspection procedure to determine if the circuit is normal or abnormal, and, if it is abnormal, use it to determine whether the problem is located in the sensors, actuators, wire harness or ECU.

INSPECTION PROCEDURE

1 **Check continuity between terminal KNK of ECM connector and body ground.**

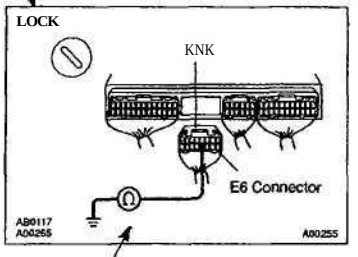

PREPARATION:
(a) Remove the glove compartment (See page SF–68).
(b) Disconnect the E6 connector of ECM.

CHECK:
Measure resistance between terminal KNK of ECM connector and body ground.

OK:
Resistance: 1 Mil or higher

OK → **Go to step 3.**

NG

2 **Check knock sensor (See page SF–61).**

OK → **Replace knock sensor.**

• Indicates the place to check the voltage or resistance.
• Indicates the connector position to checked, from the front or back side.

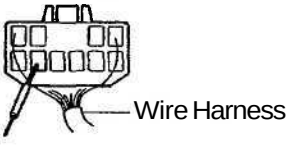

Check from the connector back side. (with harness)



Check from the connector front side. (without harness)
In this case, care must be taken not to bend the terminals.

• Indicates the condition of the connector of ECU during the check.

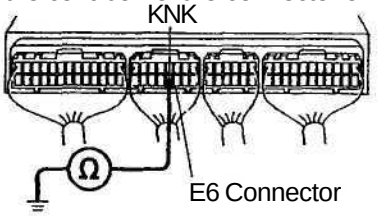

Connector being checked is connected.

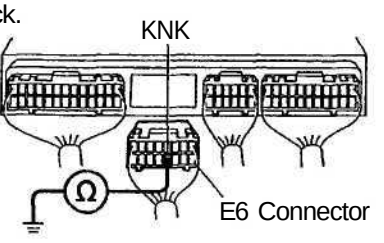

Connector being checked is disconnected.

V08425

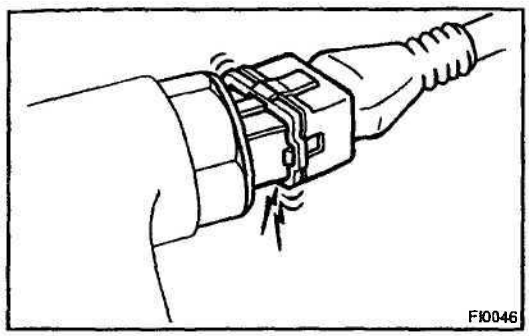
FI0046

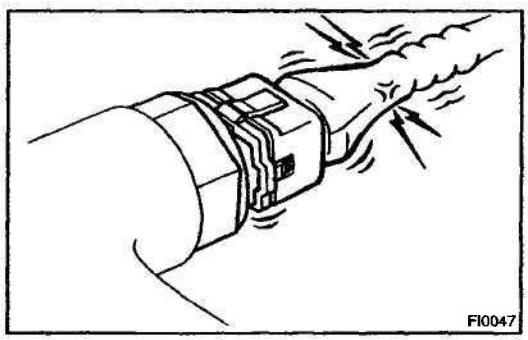
FI0047

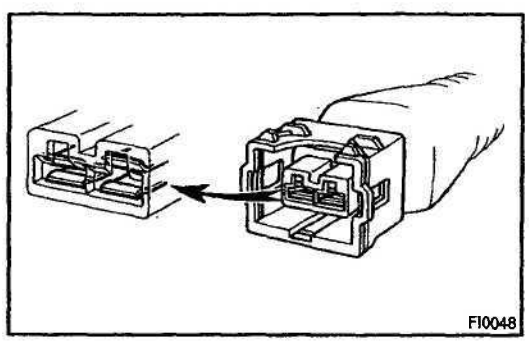
FI0048

HOW TO USE THE DIAGNOSTIC CHART AND INSPECTION PROCEDURE

1. CONNECTOR CONNECTION AND TERMINAL INSPECTION

- For troubleshooting, diagnostic trouble code charts or problem symptom table are provided for each circuit with detailed inspection procedures on the following pages.
- When all the component parts, wire harnesses and connectors of each circuit except the ECU are found to be normal in troubleshooting, then it is determined that the problem is in the ECU. Accordingly, if diagnosis is performed without the problem symptoms occurring, refer to Step 8 to replace the ECU. So always confirm that the problem symptoms are occurring, or proceed with inspection while using the symptom simulation method.
- The instructions "Check wire harness and connector" and "Check and replace ECU" which appear in the inspection procedure, are common and applicable to all diagnostic trouble codes. Follow the procedure outlined below whenever these instructions appear.

OPEN CIRCUIT:

This could be due to a disconnected wire harness, faulty contact in the connector, and a connector terminal pulled out, etc.

HINT:

- It is rarely the case that a wire is broken in the middle of it. Most cases occur at the connector. In particular, carefully check the connectors of sensors and actuators
- Faulty contact could be due to rusting of the connector terminals, to foreign materials entering terminals or a deformation of connector terminals. Simply disconnecting and reconnecting the connectors once changes the condition of the connection and may result in a return to normal operation. Therefore, in troubleshooting, if no abnormality is found in the wire harness and connector check, but the problem disappears after the check, then the cause is considered to be in the wire harness or connectors.

SHORT CIRCUIT:

This could be due to a contact between wire harness and the body ground or to a short circuit occurred inside the switch, etc.

HINT:

When there is a short circuit between the wire harness and body ground, check thoroughly whether the wire harness is caught in the body or is clamped properly.

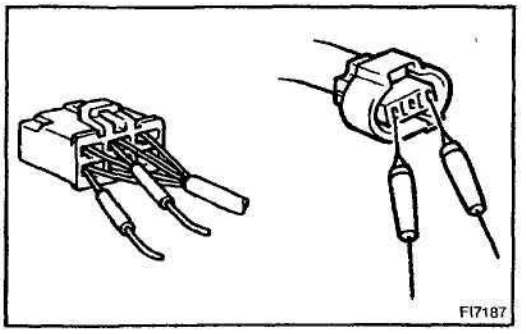

2. CONNECTOR HANDLING

When inserting tester probes into a connector, insert them from the rear of the connector. When necessary, use mini test leads. For water resistant connectors which cannot be accessed from behind, take good care not to deform the connector terminals.

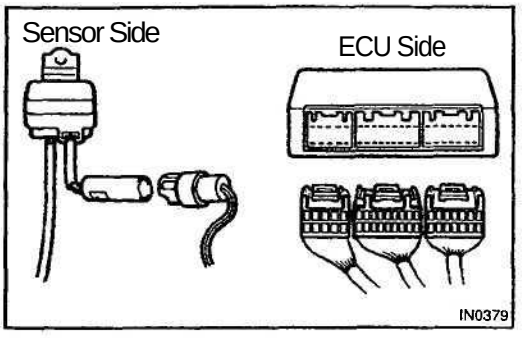

3. CONTINUITY CHECK (OPEN CIRCUIT CHECK)

(a) Disconnect the connectors at both ECU and sensor sides.

(b) Measure the resistance between the applicable terminals of the connectors.

Resistance: 1 Ω or less

HINT:

Measure the resistance while lightly shaking the wire harness vertically and horizontally.

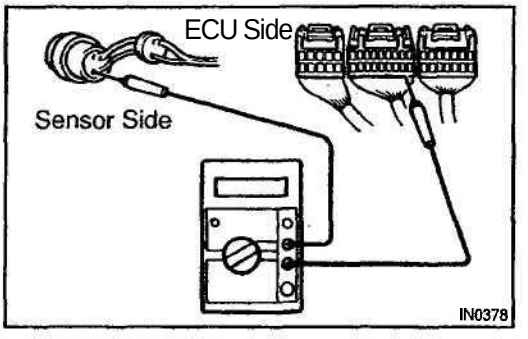

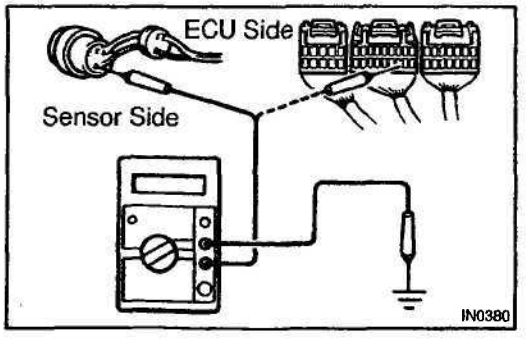

4. RESISTANCE CHECK (SHORT CIRCUIT CHECK)

(a) Disconnect the connectors on both ends.

(b) Measure the resistance between the applicable terminals of the connectors and body ground. Be sure to carry out this check on the connectors on both ends.

Resistance: 1 Ma or higher

HINT:

Measure the resistance while lightly shaking the wire harness vertically and horizontally.

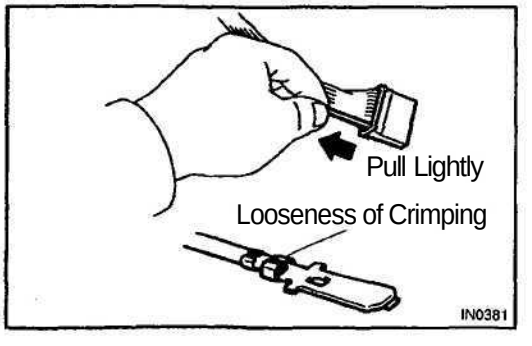

5. VISUAL CHECK AND CONTACT PRESSURE CHECK

(a) Disconnect the connectors at both ends.

(b) Check for rust or foreign material, etc. in the terminals of the connectors.

(c) Check crimped portions for looseness or damage and check that the terminals are secured in lock portion.

HINT:

The terminals should not come out when pulled lightly from the back.

(d) Prepare a test male terminal and insert it in the female terminal, then pull it out.

NOTICE:

When testing a gold-plated female terminal, always use a gold-plated male terminal.

HINT:

When the test terminal is pulled out more easily than others, there may be poor contact in that section.

Fig. 1

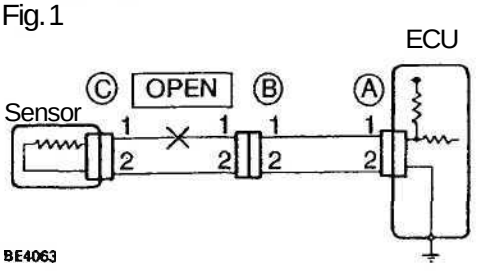

6. CHECK OPEN CIRCUIT

For the open circuit in the wire harness in Fig. 1, perform "(a) Continuity Check" or "(b) Voltage Check" to locate the section.

Fig. 2

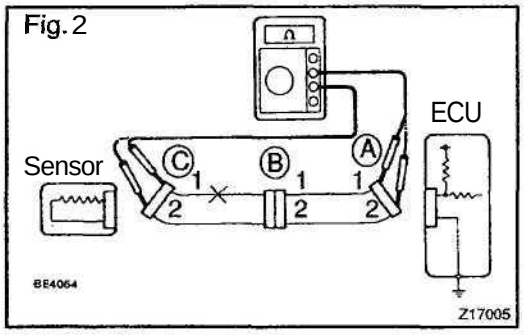

(a) Check the continuity.

(1) Disconnect connectors "A" and "C" and measure the resistance between them.

In the case of Fig. 2,

Between terminal 1 of connector "A" and terminal 1 of connector "C" → No continuity (open)

Between terminal 2 of connector "A" and terminal 2 of connector "C" → Continuity

Therefore, it is found out that there is an open circuit between terminal 1 of connector "A" and terminal 1 of connector "C".

Fig. 3

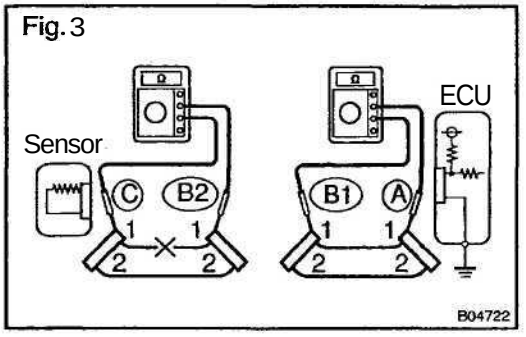

(2) Disconnect connector "B" and measure the resistance between the connectors.

In the case of Fig. 3,

Between terminal 1 of connector "A" and terminal 1 of connector "B1" → Continuity

Between terminal 1 of connector "B2" and terminal 1 of connector "C" → No continuity (open)

Therefore, it is found out that there is an open circuit between terminal 1 of connector "B2" and terminal 1 of connector "C".

Fig. 4

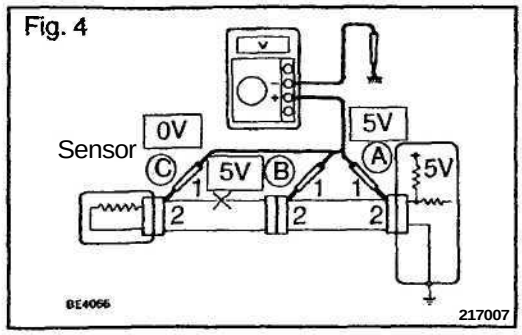

(b) Check the voltage.

In a circuit in which voltage is applied (to the ECU connector terminal), an open circuit can be checked for by conducting a voltage check.

As shown in Fig. 4, with each connector still connected, measure the voltage between body ground and terminal 1 of connector "A" at the ECU 5V output terminal, terminal 1 of connector "B", and terminal 1 of connector "C", in that order.

If the results are:

5V: Between Terminal 1 of connector "A" and Body Ground
5V: Between Terminal 1 of connector "B" and Body Ground
0V: Between Terminal 1 of connector "C" and Body Ground

Then it is found out that there is an open circuit in the wire harness between terminal 1 of "B" and terminal 1 of "C".

Fig. 5

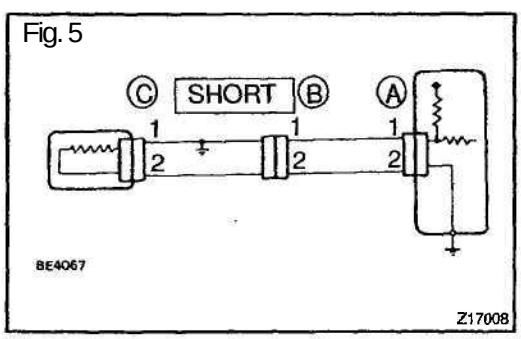

7. CHECK SHORT CIRCUIT

If the wire harness is ground shorted as in Fig. 5, locate the section by conducting a "continuity check with ground".

Fig. 6

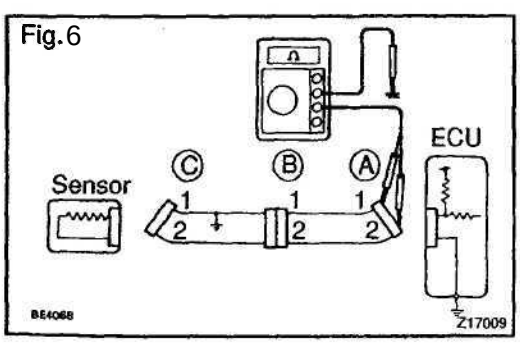

Check the continuity with ground.

(1) Disconnect connectors "A" and "C" and measure the resistance between terminal 1 and 2 of connector "A" and body ground.

In the case of Fig. 6

Between terminal 1 of connector "A" and body ground → Continuity (short)

Between terminal 2 of connector "A" and body ground → No continuity

Therefore, it is found out that there is a short circuit between terminal 1 of connector "A" and terminal 1 of connector "C".

Fig. 7

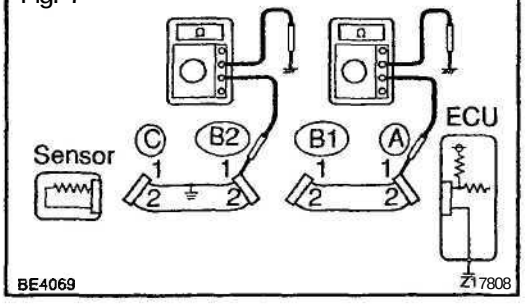

(2) Disconnect connector "B" and measure the resistance between terminal 1 of connector "A" and body ground, and terminal 1 of connector "B2" and body ground.
Between terminal 1 of connector "A" and body ground → No continuity
Between terminal 1 of connector "B2" and body ground → Continuity (short)
Therefore, it is found out that there is a short circuit between terminal 1 of connector "B2" and terminal 1 of connector "C".

8. CHECK AND REPLACE ECU

First check the ECU ground circuit. If it is faulty, repair it. If it is normal, the ECU could be faulty, so replace the ECU with a normal functioning one and check that the symptoms appear.

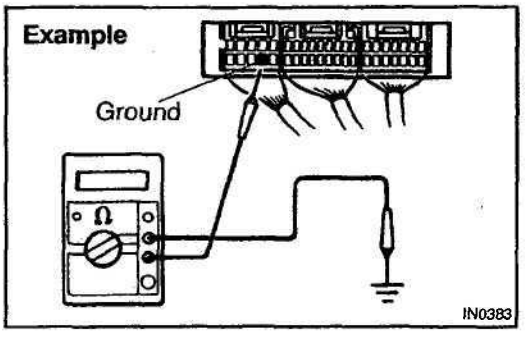

(1) Measure the resistance between the ECU ground terminal and the body ground.

Resistance: 1 Ω or less

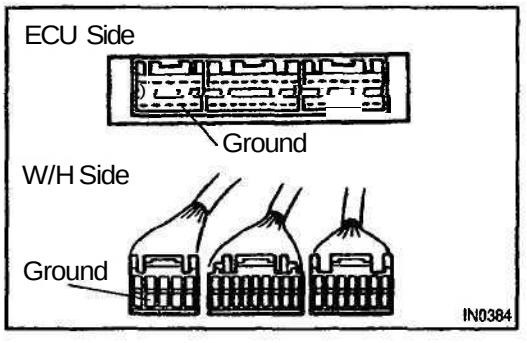

(2) Disconnect the ECU connector, check the ground terminals on the ECU side and the wire harness side for bend and check the contact pressure.

TERMS

ABBREVIATIONS USED IN THIS MANUAL

IN04Q–07

Abbreviations	Meaning
ABS	Anti–Lock Brake System
AC	Alternating Current
ACC	Accessory
ACIS	Acoustic Control Induction System
ACSD	Automatic Cold Start Device
A.D.D.	Automatic Disconnecting Differential
A/F	Air-Fuel Ratio
AHC	Active Height Control Suspension
ALR	Automatic Locking Retractor
ALT	Alternator
AMP	Amplifier
ANT	Antenna
APPROX.	Approximately
A/T	Automatic Transmission (Transaxle)
ATF	Automatic Transmission Fluid
AUTO	Automatic
AUX	Auxiliary
AVG	Average
AVS	Adaptive Variable Suspension
BA	Brake Assist
BACS	Boost Altitude Compensation System
BAT	Battery
BDC	Bottom Dead Center
B/L	Bi–Level
B/S	Bore–Stroke Ratio
BTDC	Before Top Dead Center
BVSV	Bimetallic Vacuum Switching Valve
Calif.	California
CB	Circuit Breaker
CCo	Catalytic Converter For Oxidation
CD	Compact Disc
CF	Cornering Force
CG	Center Of Gravity
CH	Channel
COMB.	Combination
CPE	Coupe
CPS	Combustion Pressure Sensor
CPU	Central Processing Unit
CRS	Child Restraint System
CTR	Center
C/V	Check Valve
CV	Control Valve

CW	Curb Weight
DC	Direct Current
DEF	Defogger
DFL	Deflector
DIFF.	Differential
DIFF. LOCK	Differential Lock
D/INJ	Direct Injection
DLI	Distributorless Ignition
DOHC	Double Over Head Cam
DP	Dash Pot
DS	Dead Soak
DSP	Digital Signal Processor
EBD	Electronic Brake Force Distribution
ECAM	Engine Control And Measurement System
ECD	Electronic Controlled Diesel
ECDY	Eddy Current Dynamometer
ECU	Electronic Control Unit
ED	Electro–Deposited Coating
EDU	Electronic Driving Unit
EDIC	Electric Diesel Injection Control
EFI	Electronic Fuel Injection
E/G	Engine
EGR-VM	Egr–Vacuum Modulator
ELR	Emergency Locking Retractor
ENG	Engine
ESA	Electronic Spark Advance
ETCS	Electronic Throttle Control System
EVP	Evaporator
E-VRV	Electric Vacuum Regulating Valve
EXH	Exhaust
FE	Fuel Economy
FF	Front–Engine Front–Wheel–Drive
F/G	Fuel Gage
FIPG	Formed In Place Gasket
FL	Fusible Link
F/P	Fuel Pump
FPU	Fuel Pressure Up
Fr	Front
FR	Front–Engine Rear–Wheel–Drive
F/W	Flywheel
FW/D	Flywheel Damper
FWD	Front–Wheel–Drive
GAS	Gasoline
GND	Ground
HAC	High Altitude Compensator
H/B	Hatchback

H–FUSE	High Current Fuse
HI	High
HID	High Intensity Discharge (Head Lamp)
HSG	Housing
HT	Hard Top
HWS	Heated Windshield System
IAC	Idle Air Control
IC	Integrated circuit
IDI	Indirect Diesel Injection
IFS	Independent Front Suspension
IG	Ignition
IIA	Integrated Ignition Assembly
IN	Intake (Manifold, Valve)
INT	Intermittent
I/P	Instrument Panel
IRS	Independent Rear Suspension
J/B	Junction Block
J/C	Junction Connector
KD	Kick–Down
LAN	Local Area Network
LB	Liftback
LCD	Liquid Crystal Display
LED	Light Emitting Diode
LH	Left–Hand
LHD	Left–Hand Drive
L/H/W	Length, Height, Width
LLC	Long–Life Coolant
LNG	Liquified Natural Gas
LO	Low
LPG	Liquified Petroleum Gas
LSD	Limited Slip Differential
LSP & PV	Load Sensing Proportioning And Bypass Valve
LSPV	Load Sensing Proportioning Valve
MAX.	Maximum
MIC	Microphone
MIL	Malfunction Indicator Lamp
MIN.	Minimum
MP	Multipurpose
MPX	Multiplex Communication System
M/T	Manual Transmission
MT	Mount
MTG	Mounting
N	Neutral
NA	Natural Aspiration
No.	Number
O/D	Overdrive

OEM	Original Equipment Manufacturing
OHC	Overhead Camshaft
OHV	Overhead Valve
OPT	Option
O/S	Oversize
P & BV	Proportioning And Bypass Valve
PCS	Power Control System
PCV	Positive Crankcase Ventilation
PKB	Parking Brake
PPS	Progressive Power Steering
PS	Power Steering
PTO	Power Take-Off
R & P	Rack And Pinion
R/B	Relay Block
RBS	Recirculating Ball Type Steering
R/F	Reinforcement
RFS	Rigid Front Suspension
RRS	Rigid Rear Suspension
RH	Right-Hand
RHD	Right-Hand Drive
RLY	Relay
ROM	Read Only Memory
Rr	Rear
RR	Rear-Engine Rear-Wheel Drive
RWD	Rear-Wheel Drive
SDN	Sedan
SEN	Sensor
SICS	Starting Injection Control System
SOC	State Of Charge
SOHC	Single Overhead Camshaft
SPEC	Specification
SPI	Single Point Injection
SRS	Supplemental Restraint System
SSM	Special Service Materials
SST	Special Service Tools
STD	Standard
STJ	Cold-Start Fuel Injection
SW	Switch
SYS	System
T/A	Transaxle
TACH	Tachometer
TBI	Throttle Body Electronic Fuel Injection
TC	Turbocharger
TCCS	TOYOTA Computer-Controlled System
TCV	Timing Control Valve
TDC	Top Dead Center

TEMP.	Temperature
TEMS	TOYOTA Electronic Modulated Suspension
TIS	Total Information System For Vehicle Development
T/M	Transmission
TMC	TOYOTA Motor Corporation
TMMK	TOYOTA Motor Manufacturing Kentucky, Inc.
TRAC	Traction Control System
TURBO	Turbocharge
U/D	Underdrive
U/S	Undersize
VCV	Vacuum Control Valve
VENT	Ventilator
VIN	Vehicle Identification Number
VPS	Variable Power Steering
VSC	Vehicle Skid Control
VSV	Vacuum Switching Valve
VTV	Vacuum Transmitting Valve
w/	With
WGN	Wagon
W/H	Wire Harness
w/o	Without
1st	First
2nd	Second
2WD	Two Wheel Drive Vehicle (4x2)
4WD	Four Wheel Drive Vehicle (4x4)

IN0CI-02

GLOSSARY OF SAE AND TOYOTA TERMS

This glossary lists all SAE–J1930 terms and abbreviations used in this manual in compliance with SAE recommendations, as well as their TOYOTA equivalents.

SAE ABBREVIATIONS	SAE TERMS	TOYOTA TERMS ( )— ABBREVIATIONS
A/C	Air Conditioning	Air Conditioner
ACL	Air Cleaner	Air Cleaner, A/CL
AIR	Secondary Air Injection	Air Injection (AI)
AP	Accelerator Pedal	–
B+	Battery Positive Voltage	+B, Battery Voltage
BARO	Barometric Pressure	HAC
CAC	Charge Air Cooler	Intercooler
CARB	Carburetor	Carburetor
CFI	Continuous Fuel Injection	–
CKP	Crankshaft Position	Crank Angle
CL	Closed Loop	Closed Loop
CMP	Camshaft Position	Cam Angle
CPP	Clutch Pedal Position	–
CTOX	Continuous Trap Oxidizer	–
CTP	Closed Throttle Position	LL ON, Idle ON
DFI	Direct Fuel Injection (Diesel)	Direct Injection (DI)
DI	Distributor Ignition	–
DLC1 DLC2 DLC3	Data Link Connector 1 Data Link Connector 2 Data Link Connector 3	1: Check Connector 2: Total Diagnosis Comunication Link (TDCL) 3: OBD II Diagnostic Connector
DTC	Diagnostic Trouble Code	Diagnostic Code
DTM	Diagnostic Test Mode	–
ECL	Engine Control Level	–
ECM	Engine Control Module	Engine ECU (Electronic Control Unit)
ECT	Engine Coolant Temperature	Coolant Temperature, Water Temperature (THW)
EEPROM	Electrically Erasable Programmable Read Only Memory	Electrically Erasable Programmable Read Only Memory (EEPROM), Erasable Programmable Read Only Memory (EPROM)
EFE	Early Fuel Evaporation	Cold Mixture Heater (CMH), Heat Control Valve (HCV)
EGR	Exhaust Gas Recirculation	Exhaust Gas Recirculation (EGR)
EI	Electronic Ignition	TOYOTA Distributorless Ignition (TDI)
EM	Engine Modification	Engine Modification (EM)
EPROM	Erasable Programmable Read Only Memory	Programmable Read Only Memory (PROM)
EVAP	Evaporative Emission	Evaporative Emission Control (EVAP)
FC	Fan Control	–
FEEPROM	Flash Electrically Erasable Programmable Read Only Memory	–
FEPROM	Flash Erasable Programmable Read Only Memory	–
FF	Flexible Fuel	–
FP	Fuel Pump	Fuel Pump
GEN	Generator	Alternator
GND	Ground	Ground (GND)

HO2S	Heated Oxygen Sensor	Heated Oxygen Sensor (HO_2S)
IAC	Idle Air Control	Idle Speed Control (ISC)
IAT	Intake Air Temperature	Intake or Inlet Air Temperature
ICM	Ignition Control Module	–
IFI	Indirect Fuel Injection	Indirect Injection (IDL)
IFS	Inertia Fuel–Shutoff	–
ISC	Idle Speed Control	–
KS	Knock Sensor	Knock Sensor
MAF	Mass Air Flow	Air Flow Meter
MAP	Manifold Absolute Pressure	Manifold Pressure Intake Vacuum
MC	Mixture Control	Electric Bleed Air Control Valve (EBCV) Mixture Control Valve (MCV) Electric Air Control Valve (EACV)
MDP	Manifold Differential Pressure	–
MFI	Multiport Fuel Injection	Electronic Fuel Injection (EFI)
MIL	Malfunction Indicator Lamp	Check Engine Lamp
MST	Manifold Surface Temperature	–
MVZ	Manifold Vacuum Zone	–
NVRAM	Non–Volatile Random Access Memory	–
O2S	Oxygen Sensor	Oxygen Sensor, O_2 Sensor (O_2S)
OBD	On–Board Diagnostic	On–Board Diagnostic System (OBD)
OC	Oxidation Catalytic Converter	Oxidation Catalyst Convert (OC), CCo
OP	Open Loop	Open Loop
PAIR	Pulsed Secondary Air Injection	Air Suction (AS)
PCM	Powertrain Control Module	–
PNP	Park/Neutral Position	–
PROM	Programmable Read Only Memory	–
PSP	Power Steering Pressure	–
PTOX	Periodic Trap Oxidizer	Diesel Particulate Filter (DPF) Diesel Particulate Trap (DPT)
RAM	Random Access Memory	Random Access Memory (RAM)
RM	Relay Module	–
ROM	Read Only Memory	Read Only Memory (ROM)
RPM	Engine Speed	Engine Speed
SC	Supercharger	Supercharger
SCB	Supercharger Bypass	E-ABV
SFI	Sequential Multiport Fuel Injection	Electronic Fuel Injection (EFI), Sequential Injection
SPL	Smoke Puff Limiter	–
SRI	Service Reminder Indicator	–
SRT	System Readiness Test	–
ST	Scan Tool	–
TB	Throttle Body	Throttle Body
TBI	Throttle Body Fuel Injection	Single Point Injection Central Fuel Injection (Ci)
TC	Turbocharger	Turbocharger
TCC	Torque Converter Clutch	Torque Converter

TCM	Transmission Control Module	Transmission ECU, ECT ECU
TP	Throttle Position	Throttle Position
TR	Transmission Range	–
TVV	Thermal Vacuum Valve	Bimetallic Vacuum Switching Valve (BVSV) Thermostatic Vacuum Switching Valve (TVSV)
TWC	Three-Way Catalytic Converter	Three-Way Catalytic (TWC) Manifold Converter CC_{RO}
TWC+OC	Three-Way + Oxidation Catalytic Converter	CC_R + CCo
VAF	Volume Air Flow	Air Flow Meter
VR	Voltage Regulator	Voltage Regulator
VSS	Vehicle Speed Sensor	Vehicle Speed Sensor
WOT	Wide Open Throttle	Full Throttle
WU-OC	Warm Up Oxidation Catalytic Converter	–
WU-TWC	Warm Up Three-Way Catalytic Converter	–
3GR	Third Gear	–
4GR	Fourth Gear	–

MAINTENANCE

OUTSIDE VEHICLE MA–1
INSIDE VEHICLE MA–2
UNDER HOOD MA–4
ENGINE MA-5
BRAKE MA–6
CHASSIS MA–7

MA

OUTSIDE VEHICLE

GENERAL MAINTENANCE

MA001-09

These are maintenance and inspection items which are considered to be the owner's responsibility. They can be done by the owner or they can have them done at a service shop.
These items include those which should be checked on a daily basis, those which, in most cases, do not require (special) tools and those which are considered to be reasonable for the owner to do.
Items and procedures for general maintenance are as follows.

1. GENERAL NOTES

- Maintenance items may vary from country to country. Check the owner's manual supplement in which the maintenance schedule is shown.
- Every service item in the periodic maintenance schedule must be performed.
- Periodic maintenance service must be performed according to whichever interval in the periodic maintenance schedule occurs first, the odometer reading (miles) or the time interval (months).
- Maintenance service after the last period should be performed at the same interval as before unless otherwise noted.
- Failure to do even one item an cause the engine to run poorly and increase exhaust emissions.

2. TIRES

(a) Check the pressure with a gauge. If necessary, adjust.
(b) Check for cuts, damage or excessive wear.

3. WHEEL NUTS

When checking the tires, check the nuts for looseness or for missing nuts. If necessary, tighten them.

4. TIRE ROTATION

Check the owner's manual supplement in which the maintenance schedule is shown.

5. WINDSHIELD WIPER BLADES

Check for wear or cracks whenever they do not wipe clean. If necessary, replace.

6. FLUID LEAKS

(a) Check underneath for leaking fuel, oil, water or other fluid.
(b) If you smell gasoline fumes or notice any leak, have the cause found and corrected.

7. DOORS AND ENGINE HOOD

(a) Check that all doors and the tailgate operate smoothly, and that all latches lock securely.
(b) Check that the engine hood secondary latch secures the hood from opening when the primary latch is released.

INSIDE VEHICLE

GENERAL MAINTENANCE

MA002-15

These are maintenance and inspection items which are considered to be the owner's responsibility. They can be done by the owner or they can have them done at a service shop.
These items include those which should be checked on a daily basis, those which, in most cases, do not require (special) tools and those which are considered to be reasonable for the owner to do.
MA Items and procedures for general maintenance are as follows.

1. GENERAL NOTES

- Maintenance items may vary from country to country. Check the owner's manual supplement in which the maintenance schedule is shown.
- Every service item in the periodic maintenance schedule must be performed.
- Periodic maintenance service must be performed according to whichever interval in the periodic maintenance schedule occurs first, the odometer reading (miles) or the time interval (months).
- Maintenance service after the last period should be performed at the same interval as before unless otherwise noted.
- Failure to do even one item an cause the engine to run poorly and increase exhaust emissions.

2. LIGHTS

(a) Check that the headlights, stop lights, taillights, turn signal lights, and other lights are all working.
(b) Check the headlight aim.

3. WARNING LIGHTS AND BUZZERS

Check that all warning lights and buzzers function properly.

4. HORN

Check that it is working.

5. WINDSHIELD GLASS

Check for scratches, pits or abrasions.

6. WINDSHIELD WIPER AND WASHER

(a) Check operation of the wipers and washer.
(b) Check that the wipers do not streak.

7. WINDSHIELD DEFROSTER

Check that air comes out from the defroster outlet when operating the heater or air conditioner.

8. REAR VIEW MIRROR

Check that it is mounted securely.

9. SUN VISORS

Check that they move freely and are mounted securely.

10. STEERING WHEEL

Check that it has the specified freeplay. Be alert for changes in steering condition, such as hard steering, excessive freeplay or strange noises.

11. SEATS

(a) Check that the seat adjusters operate smoothly.
(b) Check that all latches lock securely in any position.
(c) For fold–down seat backs, check that the latches lock securely.

12. SEAT BELTS

(a) Check that the seat belt system such as the buckles, retractors and anchors operate properly and smoothly.
(b) Check that the belt webbing is not cut, frayed, worn or damaged.

13. ACCELERATOR PEDAL

Check the pedal for smooth operation and uneven pedal effort or catching.

14. CLUTCH PEDAL (See page CL–2)

(a) Check the pedal for smooth operation.

(b) Check that the pedal has the proper freeplay.

15. BRAKE PEDAL (See page BR–6)

(a) Check the pedal for smooth operation.

(b) Check that the pedal has the proper reserve distance and freeplay.

(c) Check the brake booster function.

16. BRAKES

At a safe place, check that the brakes do not pull to one side when applied.

17. PARKING BRAKE (See page BR–8)

(a) Check that the lever has the proper travel.

(b) On a safe incline, check that the vehicle is held securely with only the parking brake applied.

18. AUTOMATIC TRANSMISSION "PARK" MECHANISM

(a) Check the lock release button of the selector lever for proper and smooth operation.

(b) On a safe incline, check that the vehicle is held securely with the selector lever in "P" position and all brakes released.

UNDER HOOD

MA003-08

GENERAL MAINTENANCE

1. GENERAL NOTES

- Maintenance items may vary from country to country. Check the owner's manual supplement in which the maintenance schedule is shown.
- Every serice item in the periodic maintenance schedule must be performed.
- Periodic maintenance service must be performed according to whichever interval in the periodic maintenance schedule occurs first, the odometer reading (miles) or the time interval (months).
- Maintenance service after the last period should be performed at the same interval as before unless otherwise noted.
- Failure to do even one item an cause the engine to run poorly and increase exhaust emissions.

2. WINDSHIELD WASHER FLUID

Check that there is sufficient fluid in the tank.

3. ENGINE COOLANT LEVEL

Check that the coolant level is between the "FULL" and "LOW" lines on the see-through reservoir.

4. RADIATOR AND HOSES

(a) Check that the front of the radiator is clean and not blocked with leaves, dirt or bugs.

(b) Check the hoses for cracks, kinks, rot or loose connections.

5. BATTERY ELECTROLYTE LEVEL

Check that the electrolyte level of all battery cells is between the upper and lower level lines on the case.

6. BRAKE AND CLUTCH FLUID LEVELS

Check that the brake and clutch fluid levels are near the upper level line on the see-through reservoirs.

7. ENGINE DRIVE BELTS

Check drive belt for fraying, cracks, wear or oiliness.

8. ENGINE OIL LEVEL

Check the level on the dipstick with the engine turned off.

9. POWER STEERING FLUID LEVEL

- Check the level.
- The level should be in the "HOT" or "COLD" range depending on the fluid temperature.

10. AUTOMATIC TRANSMISSION FLUID LEVEL

(a) Park the vehicle on a level surface.

(b) With the engine idling and the parking brake applied, shift the selector into all positions from "P" to "L", and then shift into "P" position.

(c) Pull out the dipstick and wipe off the fluid with a clean rag. Re-insert the dipstick and check that the fluid level is in the HOT range.

(d) Do this check with the fluid at normal driving temperature (70 - 80°C, 158 – 176°F).

HINT:

Wait until the engine cools down (approx. 30 min.) before checking the fluid level after extended driving at high speeds, in hot weather, in heavy traffic or pulling a trailer.

11. EXHAUST SYSTEM

If any change in the sound of the exhaust or smell of the exhaust fumes is noticed, have the cause located and corrected.

ENGINE

MA00R-06

INSPECTION

HINT:

Inspect these items when the engine is cold.

1. **INSPECT DRIVE BELT**
   (See page CH-2)
2. **REPLACE SPARK PLUGS**
   (See page IG–1)

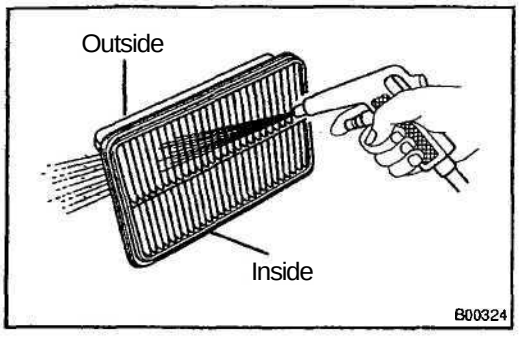

3. **INSPECT AIR FILTER**

(a) Visually check that the air filter is not excessively dirty or oily.

HINT:

Oiliness may indicate a stuck PCV valve.

If necessary, replace the air cleaner element.

(b) Clean the air filter with compressed air.
First blow from the inside thoroughly, then blow off the outside of the element.

4. **REPLACE AIR FILTER**

Replace the air filter with a new one.

5. **REPLACE ENGINE OIL AND OIL FILTER**
   (See page LU-3)
6. **REPLACE ENGINE COOLANT**
   (See page CO–2)
7. **REPLACE GASKET IN FUEL TANK CAP**
   (See page SF-28)
8. **INSPECT FUEL LINES AND CONNECTIONS**
   (See page SF-28)
9. **INSPECT EXHAUST PIPES AND MOUNTINGS**
   (See page EC–11)
10. **ADJUST VALVE CLEARANCE**
    (See page EM–4)

MA

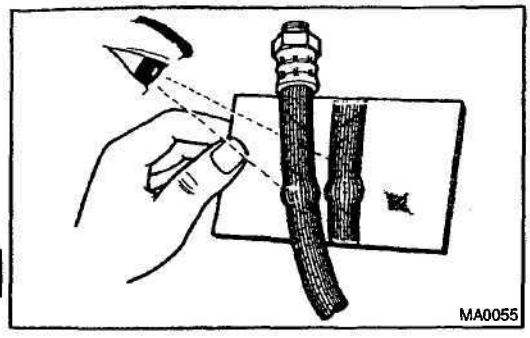

BRAKE

MA00M–03

INSPECTION

1. INSPECT BRAKE LINE PIPES AND HOSES

HINT:

Check in a well lighted area. Check the entire circumference and length of the brake hoses using a mirror as required. Turn the front wheels fully right or left before checking the front brake.

(a) Check all brake lines and hoses for:
- Damage
- Wear
- Deformation
- Cracks
- Corrosion
- Leaks
- Bends
- Twists

(b) Check all clamps for tightness and connections for leakage.

(c) Check that the hoses and lines are clear of sharp edges, moving parts and the exhaust system.

(d) Check that the lines installed in grommets pass through the center of the grommets.

2. INSPECT FRONT BRAKE PADS AND DISCS
(See page BR–18)

3. INSPECT REAR BRAKE PADS AND DISCS
(See page BR–34)

4. INSPECT BRAKE LININGS AND DRUMS
(See page BR–39)

CHASSIS

MA03N-01

INSPECTION

1. INSPECT STEERING LINKAGE

(a) Check the steering wheel freeplay (See page SR–8).

(b) Check the steering linkage for looseness or damage.
Check that:
- Tie rod ends do not have excessive play.
- Dust seals and boots are not damaged.
- Boot clamps are not loose.

MA

2. INSPECT STEERING GEAR HOUSING OIL

Check the steering gear housing for oil leakage.

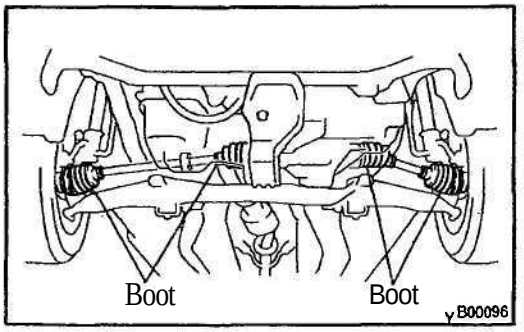

3. INSPECT DRIVE SHAFT BOOTS

Check the drive shaft boots for clamp looseness, leakage or damage.

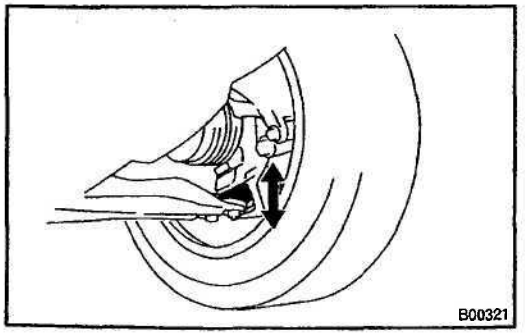

4. INSPECT BALL JOINT AND DUST COVERS

(a) Inspect the ball joints for excessive looseness.
- Jack up the front of the vehicle and place wooden blocks with a height of 180 - 200 mm (7.09 - 7.87 in.) under the front tires.
- Lower the jack until there is about half a load on the front coil spring. Place stands under the vehicle for safety.
- Check that the front wheels are pointing straight ahead, and block them with chocks.
- Using a lever, pry up the end of the lower arm, and check the amount of play.

Maximum ball joint vertical play:
0 mm (0 in.)

If there is play, replace the ball joint.

(b) Check the dust cover for damage.

5. CHECK TRANSAXLE OIL (FLUID)

Visually check the transaxle for oil (fluid) leakage.
If leakage is found, check for the cause and repair.

6. REPLACE TRANSAXLE FLUID

(a) M/T:
Replace transaxle oil.
(C56: See page MX–4)
(C60: See page MX–4)

(b) A/T:
Replace transaxle (transmission) fluid.
(U240E: See page DM57)
(U341E: See page DI–220)

7. TIGHTEN BOLTS AND NUTS ON CHASSIS AND BODY

If the vehicle is mainly operated under the rough, muddy road conditions, Tighten the seat mounting bolts and front and rear suspension member retaining bolts to specified torque.

- Seat mounting bolts
  Torque: 37 N m (375 kgf·cm, 27 ft·lbf)

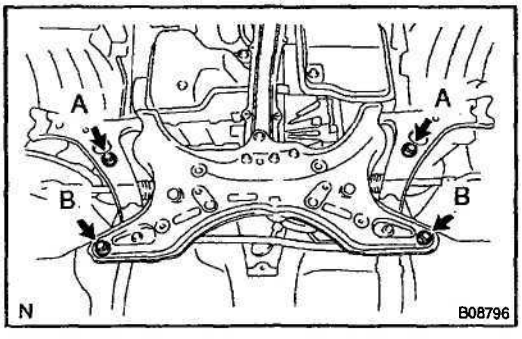

- Front suspension member - to body mounting bolts
  Torque:
  Bolt A 113 N·m (1,152 kgf·cm, 83 ft·lbf)
  Bolt B 157 N·m (1,600 kgf·cm, 116 ftlbf)

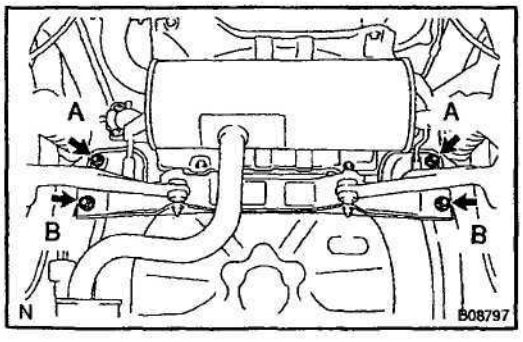

- Rear suspension member - to body mounting bolts
  Torque:
  Bolt A 80 N·m (816 kgf·cm, 59 ft·lbf)
  Bolt B 130 N·m (1,326 kgf-cm, 96 ft·lbf

PREPARATION

MAINTENANCE PP–1
ENGINE MECHANICAL PP–2
EMISSION CONTROL PP–7
SFI PP–8
COOLING PP–11
LUBRICATION PP–15
IGNITION PP–19
STARTING PP–21
CHARGING PP-24
CLUTCH PP–27
MANUAL TRANSAXLE (C56) PP–31
MANUAL TRANSAXLE (C60) PP-38
AUTOMATIC TRANSAXLE (U240E) PP–46
AUTOMATIC TRANSAXLE (U341E) PP–51
SUSPENSION AND AXLE PP-56
BRAKE PP–62
STEERING PP–67
SUPPLEMENTAL RESTRAINT SYSTEM . . . PP–74
BODY ELECTRICAL PP-77
BODY PP–80
AIR CONDITIONING PP–85

PP

MAINTENANCE

EQUIPMENT

PP0E6-02

Mirror	Brake hose
Torque wrench	

ENGINE MECHANICAL

SST (Special Service Tools)

PP2E1-01

	09032–00100 Oil Pan Seal Cutter	
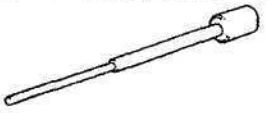	09201–01055 Valve Guide Bushing Remover & Replacer 5.5	
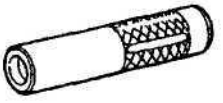	09201–41020 Valve Stem Oil Seal Replacer	
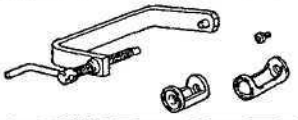	09202-70020 Valve Spring Compressor	
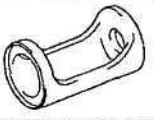	(09202–00020) Attachment	
	09213–70010 Crankshaft Pulley Holding Tool	
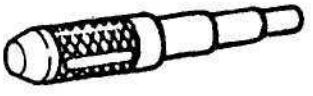	09222-30010 Connecting Rod Bushing Remover & Replacer	
	09223-15030 Oil Seal & Bearing Replacer	
	09223-22010 Crankshaft Front Oil Seal Replacer	
	09309–37010 Transmission Bearing Replacer	
	09330–00021 Companion Flange Holding Tool	
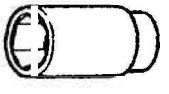	09816–30010 Oil Pressure Switch Socket	

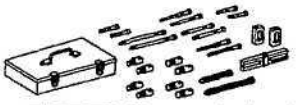	09950–50012 Puller C Set	
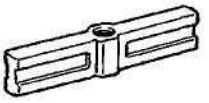	(09951–05010) Hanger 150	
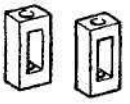	(09952–05010) Slide Arm	
	(09953–05020) Center Bolt 150	
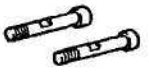	(09954–05020) Claw No.2	
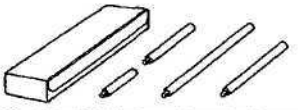	09950–70010 Handle Set	
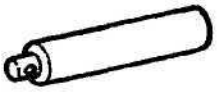	(09951–07100) Handle 100	

PP

PP2EJ-01

RECOMMENDED TOOLS

	09090–04020 Engine Sling Device	For suspending engine
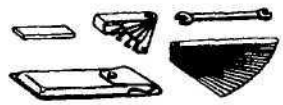	09200–00010 Engine Adjust Kit .	
	09258–00030 Hose Plug Set .	Plug for vacuum hose, fuel hose etc.

EQUIPMENT

Abrasive compound	Valve
Caliper gauge	
CO/HC meter	
Compression gauge	
Connecting rod aligner	
Cylinder gauge	
Dial indicator	
Dye penetrant	
Engine tune-up tester	
Groove cleaning tool	Piston ring groove
Heater	
Magnetic finger	
Micrometer	
OBDII scan tool	
Pin hole grinder	Piston pin hole of piston
Piston ring compressor	
Piston ring expander	
Plastigage	
Precision straight edge	
Press	
Ridge reamer	Cylinder
Soft brush	
Solvent	
Spring tester	Valve spring
Steel square	Valve spring
Thermometer	
Torque wrench	
Torx wrench socket set	Stud bolt
Valve seat cutter	
V-block	
Vernier calipers	
Wire brush	Valve

PP107-02

SSM (Special Service Materials)

08826-00080	Seal Packing Black or equivalent (FIPG)	
08826-00100	Seal Packing 1282B, THREE BOND 1282B or equivalent (FIPG)	
08833-00070	Adhesive 1324, THREE BOND 1324 or equivalent	

EMISSION CONTROL

EQUIPMENT

PP0JV-05

Torque wrench	
Vacuum gauge	
Pressure gauge	
Hose clipper	

SFI

SST (Special Service Tools)

PP2ED-01

	09268–21010 Fuel Hose Puller	
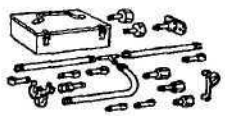	09268–41047 Injection Measuring Tool Set	
	(95336–08070) Hose	
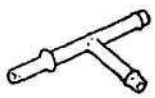	(09268–41250) T Joint	
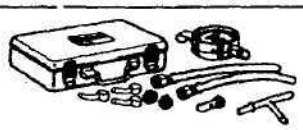	09268–45014 EF1 Fuel Pressure Gauge	
	(09268–41200) Gauge	
	(09268–41220) Hose	
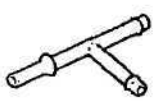	(09268–41250) T Joint	
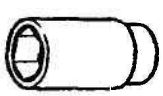	09816–30010 Oil Pressure Switch Socket	
	09842-30080 EFI Inspection Wire "H"	
	09843–18020 Diagnosis Check Wire	

PP0JX-02

RECOMMENDED TOOLS

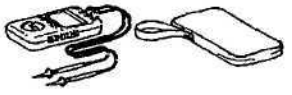	09082-00040 TOYOTA Electrical Tester.	
	09258-00030 Hose Plug Set .	Plug *tor* vacuum hose, fuel hose eta.

FP0JY-02

EQUIPMENT

Carburetor cteaner	Throttle body
Graduated cylinder	Injector
OBDII scan tool	
Soft brush	Throttle body
Sound scope	Injector
Torque wrench	
Vacuum gauge	

COOLING

SST (Special Service Tools)

PP2DS-01

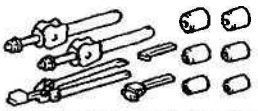	09230–01010 Radiator Service Tool Set	
	09231-14010 Punch	
	09960–10010 Variable Pin Wrench Set	
	(09963–00600) Pin 6	
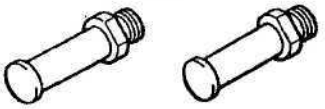	(09963–01000) Pin 10	

PP189-01

RECOMMENDED TOOLS

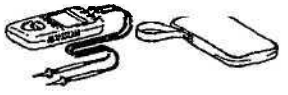	09082–00040 TOYOTA Electrical **Tester.**	

PP18A-01

EQUIPMENT

Heater	ECT switch, Thermostat
Radiator cap tester	
Thermometer	ECT switch, Thermostat
Torque wrench	
Vernier calipers	

PP16B-02

COOLANT

Item		Capacity	Classification
Engine coolant	1ZZ–FE:		Ethylene–glycol base
	M/T	5.7 liters (6.0 US qts, 5.0 Imp. qts)	
	A/T	5.6 liters (5.9 US qts, 4.9 Imp. qts)	
	2ZZ–GE:		
	M/T	5.9 liters (6.2 US qts, 5.2 Imp. qts)	
	A/T	5.8 liters (6.1 US qts, 5.1 Imp. qts)	

LUBRICATION

SST (Special Service Tools)

PP2DU-01

	09228–06501 Oil Filter Wrench	
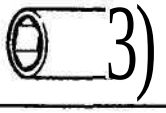	09816–30010 Oil Pressure Switch Socket	

PP0K5-05

EQUIPMENT

Oil pressure gauge	
Torque wrench	
Feeler gauge	
Straight edge	

PP0K6-06

LUBRICANT

Item		Capacity	Classification
Engine oil			API grade SJ, Energy–Conserving or ILSAC multi-tigrade engine oil. SAE 5W–30 is the best choice for your vehicle, for good fuel economy, and good starting in cold weather.
Drain and refill	1ZZ–FE:		
	w/ Oil cooler	3.7 liters (3.9 US qts, 3.3 Imp.qts)	
	w/o Oil cooler	3.5 liters (3.7 US qts, 3.1 Imp.qts)	
	2ZZ–FE:		
	w/ Oil cooler	4.4 liters (4.8 US qts, 4.0 Imp.qts)	
	w/o Oil cooler	4.2 liters (4.6 US qts, 3.8 Imp.qts)	
Dry fill	1ZZ–FE:	4.1 liters (4.3 US qts, 3.6 Imp.qts)	
	2ZZ–GE:	4.8 liters (5.1 US qts, 4.2 Imp.qts)	

SSM (Special Service Materials)

08833–00080	Adhesive 1344 THREE BOND 1344 LOCTITE 242 or equivalent	Oil pressure switch

IGNITION

RECOMMENDED TOOLS

PP0KB-02

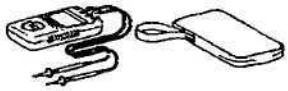	09082–00040 TOYOTA Electrical Tester.	
	09200–00010 Engine Adjust Kit .	

PP0K3-05

EQUIPMENT

Spark plug cleaner	

STARTING

SST (Special Service Tools)

PP0KA–03

	09286–46011 Injection Pump Spline Shaft Puller	
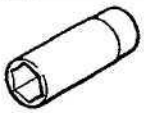	09810–38140 Starter Magnet Switch Nut Wrench 14	
	09820–00030 Alternator Rear Bearing Replacer	

PP0KB–02

RECOMMENDED TOOLS

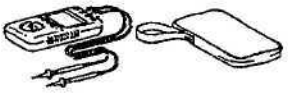	09082–00040 TOYOTA Electrical Tester.	

PP0KC-02

EQUIPMENT

Dial indicator	Commutator
Magnetic finger	Steel ball
Press	Magnetic switch terminal Kit part
Pull scale	Brush spring
Sandpaper	Commutator
Torque wrench	
V-block	Commutator
Vernier calipers	Commutator, Brush

CHARGING

SST (Special Service Tools)

PP2DH-01

	09285–76010 Injection Pump Camshaft Bearing Cone Replacer	
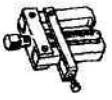	09286–46011 Injection Pump Spline Shaft Puller	
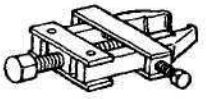	09820–00021 Alternator Rear Bearing Puller	
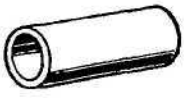	09820–00030 Alternator Rear Bearing Replacer	
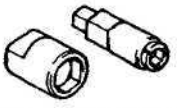	09820–63010 Alternator Pulley Set Nut Wrench Set	
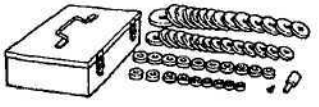	09950–60010 Replacer Set	
	(09951–00350) Replacer 35	
	(09951–00530) Replacer 53	
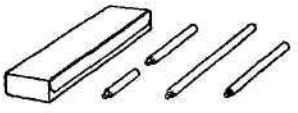	09950–70010 Handle Set	
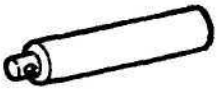	(09951–07100) Handle 100	

PP0KE-02

RECOMMENDED TOOLS

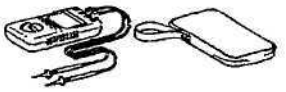	09082–00040 TOYOTA Electrical Tester.	

PP0KF-02

EQUIPMENT

Battery specific gravity gauge	Except maintenance free battery
Belt tension gauge	
Torque wrench	
Vernier calipers	Rotor (Slip ring), Brush

CLUTCH

SST (Special Service Tools)

PP00Z-02

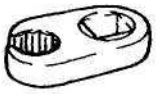	09023–00100 Union Nut Wrench 10 mm	Clutch line
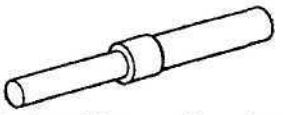	09301–00210 Clutch Guide Tool	
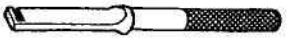	09333–00013 Clutch Diaphragm Spring Aligner	

PP2E1-01

RECOMMENDED TOOLS

	09031–00030 Pin Punch .	
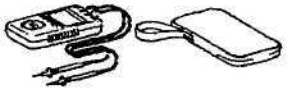	09082–00040 TOYOTA Electrical Tester.	
	09905–00013 Snap Ring Pliers .	

PP0H1-02

EQUIPMENT

Vernier calipers	
Dial indicator	
Torque wrench	

LUBRICANT

Item	Capacity	Classification
Brake fluid	–	SAE J1703 or FMVSS No. 116 DOT3

MANUAL TRANSAXLE (C56)

SST (Special Service Tools)

PP2EA–01

	09223–50010	Crankshaft Front oil Seal Replacer	Output shaft front bearing inner race
	09226–10010	Crankshaft Front & Rear Bearing Replacer	Transmission case oil seal
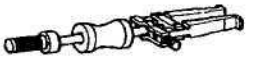	09308–00010	Oil Seal Puller	Output shaft front bearing
	09309-12020	5th Driven Gear Replacer	
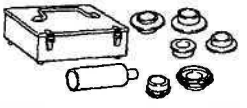	09316–60011	Transmission & Transfer Bearing Replacer	Differential tapered roller bearing
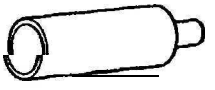	(09316–00011)	Replacer Pipe	
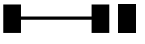	09350–32014	TOYOTA Automatic Transmission Tool Set	Differential tapered roller bearing
	(09351-32120)	Overdrive Bearing Replacer	
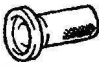	(09351-32140)	Oil Seal Replacer	
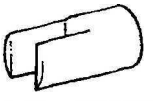	09564–32011	Differential Preload Adaptor	
	09608–00071	Drive Pinion Rear Bearing Cone Replacer	Input shaft rear radial ball bearing Output shaft rear radial ball bearing
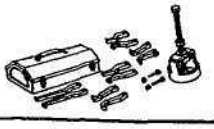	09612–65014	Steering Worm Bearing Puller	Input shaft front bearing Differential tapered roller bearing outer race

	09628–62011 Ball Joint Puller	5th driven gear
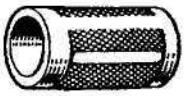	09636–20010 Upper Ball Joint Dust Cover Replacer	No. 3 hub sleeve assembly
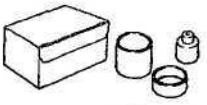	09710–28021 Front Suspension Bushing Tool Set	Transaxle case oil seal
	(09710–08041) Bushing Replacer	
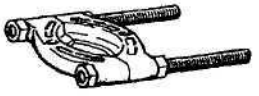	09950–00020 Bearing Remover	
	09950–00030 Bearing Remover Attachment	Differential tapered roller bearing
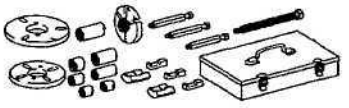	09950–30011 Puller A Set	No. 3 clutch hub
	09950–40011 Puller B Set	5th driven gear
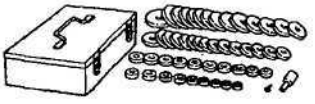	09950–60010 Replacer Set	
	(09951–00230) Replacer 23	5th driven gear
	(09951–00350) Replacer 35	Differential tapered roller bearing
	(09951–00360) Replacer 36	Input shaft front oil seal Differential tapered roller bearing
	(09951–00400) Replacer 40	Input shaft front bearing

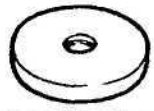	(09951–00560) Replacer 56	Output shaft front bearing
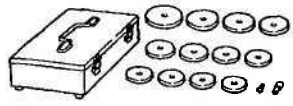	09950–60020 Replacer Set No.2	
	(09951–00680) Replacer 68	Differential tapered roller bearing outer race (Transaxle case side)
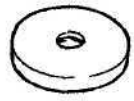	(09951–00710) Replacer 71	Differential tapered roller bearing outer race (Transmission case side)
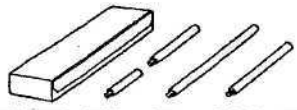	09950–70010 Handle Set	
	(09951–07150) Handle 150	

PP2EB-01

RECOMMENDED TOOLS

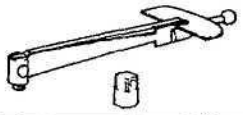	09025–00010 Torque Wrench (30 kgf–cm)	Differential preload
	09031–00030 Pin Punch .	
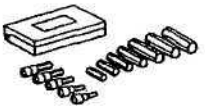	09040–00011 Hexagon Wrench Set .	
	09042–00010 Torx Socket T30 .	
	09090–04020 Engine Sling Device	
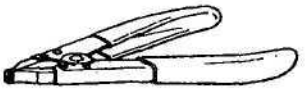	09905–00012 Snap Ring No.1 Expander .	

PP04Q-03

EQUIPMENT

Dial indicator with magnetic base	
Feeler gauge	
Micrometer	
Torque wrench	
Magnetic finger	
Wooden block or similar object	

PP04S-03

LUBRICANT

Item	Capacity	Classification
Manual transaxle oil (w/ Differential oil)	1.9 liters (2.0 US qts, 1.7 Imp. qts)	API GL-4 or GL-5 SAE 75W-90

SSM (Special Service Materials)

08826–00090	Seal Packing 1281, THREE BOND 1281 or equivalent (FIPG)	Transmission case x Transaxle case Transmission case x Transmission case cover
08833–00080	Adhesive 1344 THREE BOND 1344 LOCTITE 242 or equivalent	

MANUAL TRANSAXLE (C60)

SST (Special Service Tools)

PP2E2-01

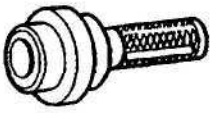	09223–50010 Crankshaft Front oil Seal Replacer	Output shaft front bearing inner race
	09226–10010 Crankshaft Front & Rear Bearing Replacer	Transmission case oil seal
	09308–00010 Oil Seal Puller	Output shaft front bearing
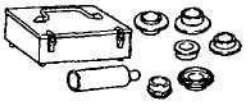	09316–60011 Transmission & Transfer Bearing Replacer	Differential tapered roller bearing
	(09316–00011) Replacer Pipe	
	09325–12010 Transmission Oil Plug	Input shaft rear radial ball bearing 6th driven gear
	09350–32014 TOYOTA Automatic Transmission Tool Set	Differential case tapered roller bearing
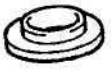	(09351–32120) Overdrive Bearing Replacer	
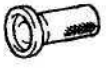	(09351-32140) Oil Seal Replacer	
	09517–12010 Rear Axle Shaft Oil Seal Replacer	Output shaft rear radial ball bearing Input shaft rear radial ball bearing
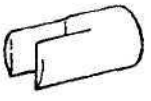	09564–32011 Differential Preload Adaptor	
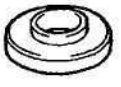	09608–00071 Drive Pinion Rear Bearing Cone Replacer	Input shaft center radial ball bearing 4th driven gear and center radial ball bearing

	09612–22011 Tilt Handle Bearing Replacer	No. 3 clutch hub assembly 5th driven gear
	09612–65014 Steering Worm Bearing Puller	Input shaft tront bearing Differential tapered roller bearing outer race
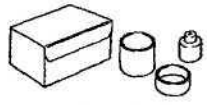	09710–28021 Front Suspension Bushing Tool Set	Transaxle case oil seal
	(09710–08041) Bushing Replacer	
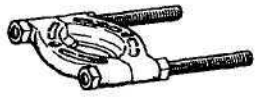	09950–00020 Bearing Remover	
	09950–00030 Bearing Remover Attachment	
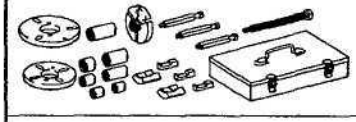	09950–30011 Puller A Set	
	(09951–03010) Upper Plate .	
	(09953–03010) Center Bolt	
	(09954–03010) Arm	
	(09955–03021) Claw No.2	
	09950–40011 Puller B Set	
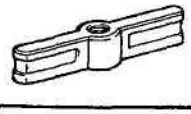	(09951–04010) Hanger 150	

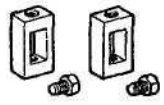	(09952–04010) Slide Arm	
	(09953–04020) Center Bolt 150	
	(09953–04030) Center Bolt 200	
	(09954–04010) Arm 25	
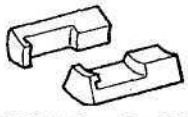	(09955–04021) Claw No.2	
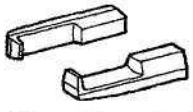	(09955–04061) Claw No.6	
	(09957–04010) Attachment	
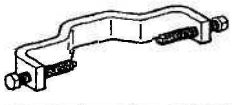	(09958–04011) Holder	
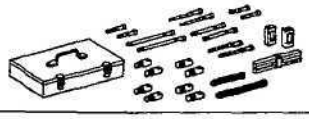	09950–50012 Puller C Set	No. 3 clutch hub assembly
	(09954–05030) Claw No.3	
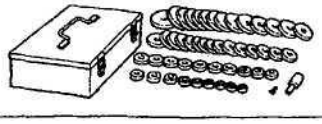	09950–60010 Replacer Set	
	(09951–00180) Replacer 18	Transmission case bushing
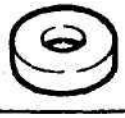	(09951–00350) Replacer 35	Differential tapered roller bearing

	(09951–00360) Replacer 36	Input shaft front oil seal
	(09951–00400) Replacer 40	Input shaft front bearing
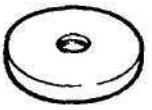	(09951–00560) Replacer 56	Output shaft front bearing
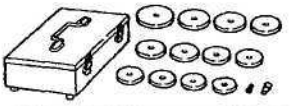	09950–60020 Replacer Set No.2	
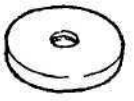	(09951–00680) Replacer 68	Differential tapered roller bearing outer race (Transaxle case side)
	(09951–00710) Replacer 71	Differential tapered roller bearing outer race (transmission case side)
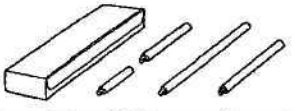	09950–70010 Handle Set	
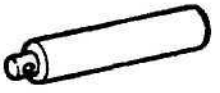	(09951–07100) Handle 100	
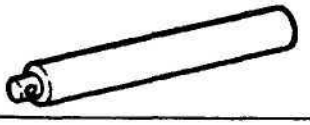	(09951–07150) Handle 150	

PP2E3-01

RECOMMENDED TOOLS

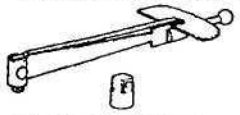	09025–00010 Torque Wrench (30 kgf–cm)	Differential preload
	09031–00030 Pin Punch .	
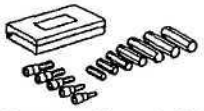	09040–00011 Hexagon Wrench Set .	
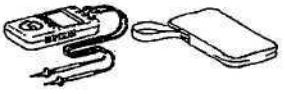	09082–00040 TOYOTA Electrical Tester.	
	09090–04020 Engine Sling Device	
	09905–00012 Snap Ring No.1 Expander .	
	09905–00013 Snap Ring Pliers .	

PP05J-02

EQUIPMENT

Dial indicator with magnetic base	
Feeler gauge	
Micrometer	
Torque wrench	
Magnetic finger	
Wooden block or similar object	

PP0SK–02

LUBRICANT

Item	Capacity	Classification
Manual transaxle oil (w/ Differential oil)	2.3 liters (2.4 US qts, 2.0 Imp. qts)	API GL–4 or GL–5 SAE 75W–90

SSM (Special Service Materials)

08826–00090	Seal Packing 1281, THREE BOND 1281 or equivalent (FIPG)	Transmission case x Transaxle case Transmission case x Transmission case cover
08833–00080	Adhesive 1344 THREE BOND 1344 LOCTITE 242 or equivalent	

AUTOMATIC TRANSAXLE (U240E)

SST (Special Service Tools)

PP2DO-01

	09308–00010 Oil Seal Puller	Side gear shaft oil seal
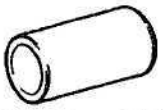	09223–00010 Cover & Seal Replacer	
	09350–32014 TOYOTA Automatic Transmission Tool Set	
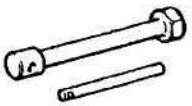	(09351–32010) One–way Clutch Test Tool	
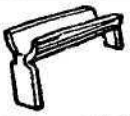	(09351–32020) Stator Stopper	
	(09351-32150) Oil Seal Replacer	
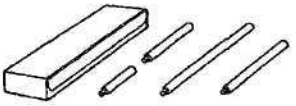	09950–70010 Handle Set	
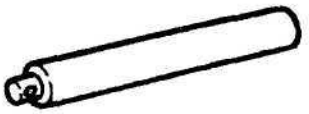	(09951–07150) Handle 150	
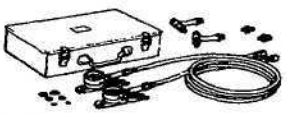	09992–00095 Automatic Transmission Oil Pressure Gauge Set	Line pressure
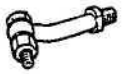	(09992–00231) Adaptor C	Line pressure
	(09992–00271) Gauge Assy	Line pressure

PP26J-03

RECOMMENDED TOOLS

	09082–00040 TOYOTA Electrical Tester.	
	09090–04020 Engine Sling Device	

PP1DQ-02

EQUIPMENT

Straight edge	Torque converter clutch
Vernier calipers	Torque converter clutch
Dial indicator or dial indicator with magnetic base	Drive plate
Hexagon wrench (10 mm)	
Torque wrench	
OBDII scan tool	

PP26L-03

LUBRICANT

Item	Capacity	Classification
Automatic transaxle fluid		
Dry fill	7.6 liters (8.0 US qts, 6.7 Imp.qts)	ATF Type T–IV or equivalent
Drain and refill	4.1 liters (4.3 US qts, 3.6 Imp.qts)	

PP26M-01

SSM (Special Service Materials)

08833–00080	Adhesive 1344 THREE BOND 1344 LOCTITE 242 Of equivalent	

AUTOMATIC TRANSAXLE (U341 E)

SST (Special Service Tools)

PP2ES-01

	09308–00010 Oil Seal Puller	Side gear shaft oil seal
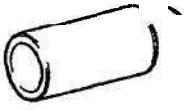	09223–00010 Cover & Seal Replacer	
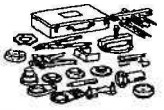	09350–32014 TOYOTA Automatic Transmission Tool Set	
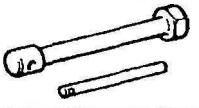	(09351-32010) One–way Clutch Test Tool	
	(09351-32020) Stator Stopper	
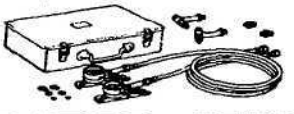	09992–00095 Automatic Transmission Oil Pressure Gauge Set	Line pressure
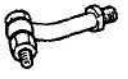	(09992–00231) Adaptor C	Line pressure
	(09992–00271) Gauge Assy	Line pressure

PP2E6-01

RECOMMENDED TOOLS

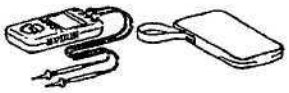	09082–00040 TOYOTA Electrical Tester.	
	09090–04020 Engine Sling Device	

PP2E7-01

EQUIPMENT

Straight edge	Torque converter clutch
Vernier calipers	Torque converter clutch
Dial indicator or dial indicator with magnetic base	Drive plate
Hexagon wrench (10 mm)	
Torque wrench	
OBDII scan tool	
Punch	

PP2E8-01

LUBRICANT

Item	Capacity	Classification
Automatic transaxle fluid		
Dry fill	6.9 liters (7.3 US qts, 6.0 Imp.qts)	ATF Type T–IV or equivalent
Drain and refill	2.9 liters (3.1 US qts, 2.6 Imp.qts)	

PP2E9-01

SSM (Special Service Materials)

08833–00080	Adhesive 1344 THREE BOND 1344 LOCTITE 242 or equivalent	

SUSPENSION AND AXLE

SST (Special Service Tools)

PP2DZ-01

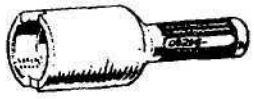	09214-76011 Crankshaft Pulley Replacer	Rear axle
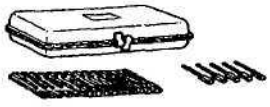	09240-00020 Wire Gauge Set	Front drive shaft
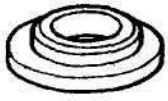	09506-35010 Differential Drive Pinion Rear Bearing Replacer	Front drive shaft
	09520-00031 Rear Axle Shaft Puller	
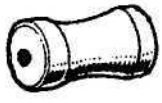	(09520-00040) Shocker	Front axle Rear axle
	(09521-00010) Attachment	Front axle
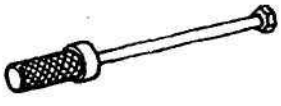	(09521-00020) Rod with Grip	Front axle Rear axle
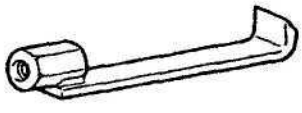	09520-01010 Drive Shaft Remover Attachment	Front drive shaft
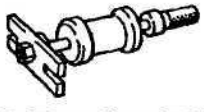	09520-24010 Differential Side Gear Shaft Puller	Front drive shaft
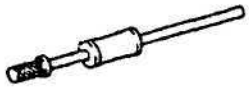	(09520-32040) Shocker Set	
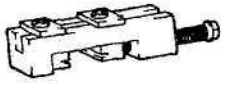	09521-24010 Drive Shaft Boot Clamping Tool	Front drive shaft
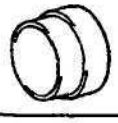	09527-17011 Rear Axle Shaft Bearing Remover	Front axle

	09555–55010 Differential Drive Pinion Bearing Replacer	Front axle
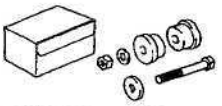	09608–16042 Front Hub Bearing Adjusting Tool	Front drive shaft
	(09608–02021) Bolt & Nut	
	(09608–02041) Retainer	
	09608–32010 Steering Knuckle Oil Seal Replacer	Front axle
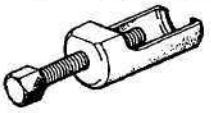	09610–20012 Pitman Arm Puller	Front axle Front drive shaft Front suspension
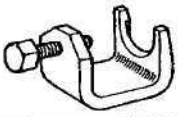	09628–10011 Ball Joint Puller	Front axle Rear axle
	09628–62011 Ball Joint Puller	Front axle Front suspension
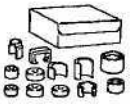	09710–30021 Suspension Bushing Tool Set	Front drive shaft
	(09710–03141) Bushing Remover Base	
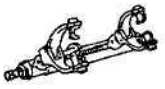	09727-30021 Coil Spring Compressor	Front suspension Rear suspension
	(09727–00010) Bolt Set	
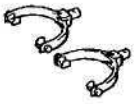	(09727–00021) Arm Set	

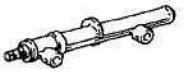	(09727–00031) Compressor	
	09729–22031 Front Spring Upper Seat Holder	Front suspension
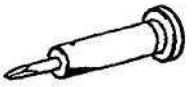	09930–00010 Drive Shaft Nut Chisel	Front axle Front drive shaft
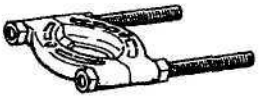	09950–00020 Bearing Remover	Front drive shaft Rear axle
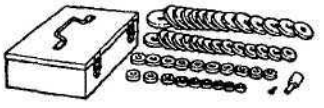	09950–60010 Replacer Set	
	(09951–00380) Replacer 38	Front axle
	(09951–00550) Replacer 55	Front axle
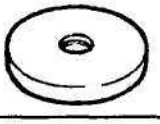	(09951–00650) Replacer 65	Front axle Front drive shaft
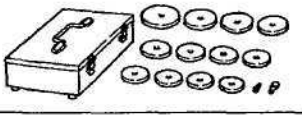	09950–60020 Replacer Set No.2	Front axle
	(09951–00730) Replacer 73	
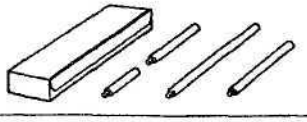	09950–70010 Handle Set	Front axle Front drive shaft
	(09951–07150) Handle 150	

PP2E0-01

RECOMMENDED TOOLS

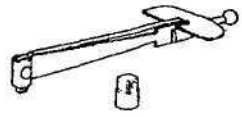	09025-00010 Torque Wrench (30 kgf-cm)	
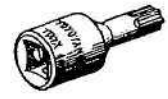	09042-00010 Torx Socket T30 .	
	09090-04020 Engine Sling Device	
	09905-00012 Snap Ring No.1 Expander .	
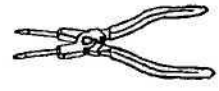	09905-00013 Snap Ring Pliers .	

PP08X-02

EQUIPMENT

Dial indicator with magnetic base	
Drill	
Torque wrench	

PP08Y-03

LUBRICANT

Drive shaft joint grease	Capacity	Application
1ZZ–FE (A/T):		
Outboard side Color= Yellow ocher	110 – 120 9 (3.9 –4.2 oz.)	
Inboard side Color= Yellow ocher	180 – 190 g (6.3 – 6.7 oz.)	
1ZZ–FE (M/T) and 2ZZ–GE:		
Outboard side Color=Black	115 –135g (4.1 – 4.8 oz.)	
Inboard side Color=Gray	100 – 120 g (3.5 – 4.2 oz.)	

BRAKE

SST (Special Service Tools)

PP2D1-01

	09023–00100 Union Nut Wrench 10 mm	
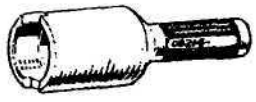	09214–76011 Crankshaft Pulley Replacer	
	09520–00031 Rear Axle Shaft Puller	
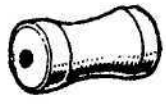	(09520–00040) Shocker	
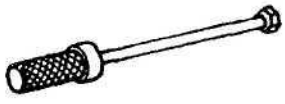	(09521–00020) Rod with Grip	
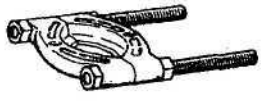	09950–00020 Bearing Remover	
	09703–30010 Brake Shoe Return Spring Tool	
	09709–29018 LSPV Gauge Set	
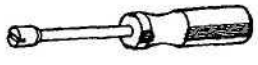	09718–00010 Shoe Hold Down Spring Driver	
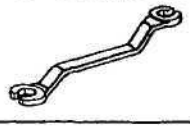	09751-36011 Brake Line Union Nut 10 x 12 mm Wrench	
	09843–18040 Diagnosis Check Wire No.2	
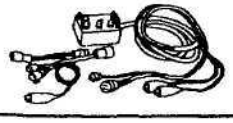	09990–00150 ABS Actuator Checker and Sub–harness	

	09990–00250 ABS Actuator Checker Sub–harness "G"	
	09990–00300 ABS Actuator Checker Sub–harness T	
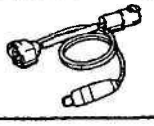	09990–00360 ABS Actuator Checker Sub–harness "L"	

PP15D-02

RECOMMENDED TOOLS

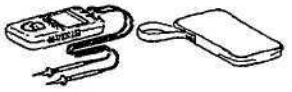	09082–00040 TOYOTA Electrical Tester.	
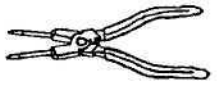	09905–00013 Snap Ring Pliers .	Master cylinder

PP16E-02

EQUIPMENT

Torque wrench	
Micrometer	Brake disc
Dial indicator	Brake disc
Vernier calipers	Brake disc
Brake drum gauge	

PP16F-02

LUBRICANT

Item	Capacity	Classification
Brake fluid	–	SAE J1703 or FMVSS No. 116 DOT 3

STEERING

SST (Special Service Tools)

PP2EX-01

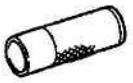	09608–04031	Front Hub Inner Bearing Cone Replacer	Tilt steering column
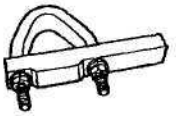	09612–00012	Rack & Pinion Steering Rack Housing Stand	PS gear
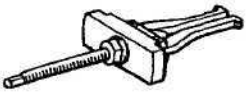	09612-20010	Power Steering Oil Seal Puller	PS gear
	09612–22011	Tilt Handle Bearing Replacer	PS gear
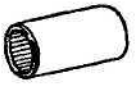	09616–00010	Steering Worm Bearing Adjusting Socket	PS gear
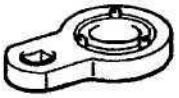	09617-35020	Power Steering Ring Nut Wrench	PS gear
	09631-12071	Steering Rack Oil Seal Test Tool	PS gear
	09631–20051	Steering Rack Cover "C"	PS gear
	09631-20081	Seal Ring Tool	PS gear
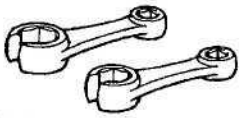	09631–22020	Power Steering Hose Nut 14 x 17 mm Wrench Set	PS vane pump PS gear
	09633–00020	Power Steering Hose Nut Wrench	PS gear
	09640–10010	Power Steering Pressure Gauge Set	Power steering fluid

	(09641–01010) Gauge Assy	
	(09641–01030) Attachment B	
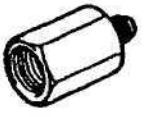	(09641–01060) Attachment E	
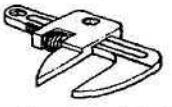	09922-10010 Variable Open Wrench	PS gear
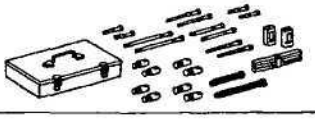	09950–50012 Puller C Set	Tilt steering column
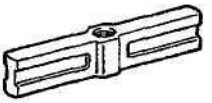	(09951–05010) Hanger 150	
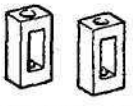	(09952–05010) Slide Arm	
	(09953–05020) Center Bolt 150	
	(09954–05020) Claw No.2	
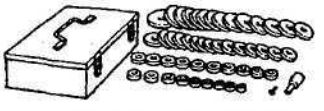	09950–60010 Replacer Set	
	(09951–00210) Replacer 21	PS gear
	(09951–00240) Replacer 24	PS gear
	(09951–00280) Replacer 28	PS vane pump PS gear

	(09951–00340) Replacer 34	PS gear
	(09951–00350) Replacer 35	PS gear
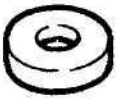	(09951–00400) Replacer 40	PS gear
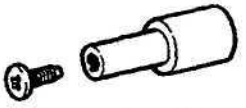	(09952–06010) Adapter	PS gear
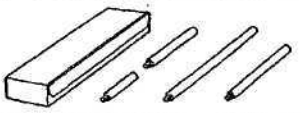	09950–70010 Handle Set	
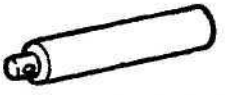	(09951–07100) Handle 100	PS vane pump PS gear
	(09951–07150) Handle 150	PS gear
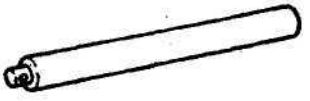	(09951–07200) Handle 200	PS gear
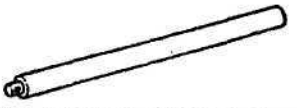	(09951–07360) Handle 360	PS gear

PP2EL-01

RECOMMENDED TOOLS

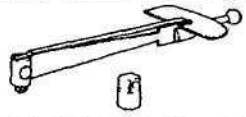	09025–00010 Torque Wrench (30 kgf–cm)	PS vane pump PS gear
	09042–00010 Torx Socket T30 .	Tilt steering column
	09904–00010 Expander Set .	
	(09904–00050) No. 4 Claw	
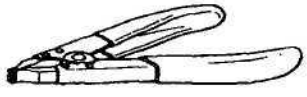	09905–00012 Snap Ring No.1 Expander .	
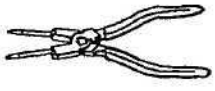	09905–00013 Snap Ring Pliers .	

PP0J9-02

EQUIPMENT

Caliper gauge	PS vane pump
Vernier Calipers	PS vane pump
Dial indicator	PS gear
Feeler gauge	PS vane pump
Micrometer	PS vane pump
Torque wrench	

PP0JB-02

LUBRICANT

Item	Capacity	Classification
Power steering fluid Total	1.0 liters (1.1 US qts, 0.9 Imp.qts)	ATF DEXRON® II or III

PP1W4-01

SSM (Special Service Materials)

08833–00080	Adhesive 1344 THREE BOND 1344 LOCTITE 242 or equivalent	PS gear

SUPPLEMENTAL RESTRAINT SYSTEM

SST (Special Service Tools)

PP0MC-08

	09082–00700 SRS Airbag Deployment Tool	
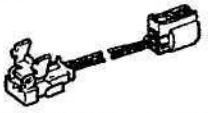	09082–00750 Airbag Deployment Wire Sub–harness No.3	
	09082–00760 Airbag Deployment Wire Sub–harness No.4	
	09843–18020 Diagnosis Check Wire	

PP1XL-03

RECOMMENDED TOOLS

	09042–00020 Torx Socket T40 .	Airbag sensor assembly
	09082–00050 TOYOTA Electrical Tester Set.	
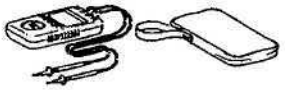	09082–00040 TOYOTA Electrical Tester.	
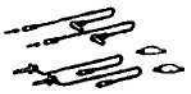	(09083–00150) Test Lead Set	

PPOMS-01

EQUIPMENT

Torque wrench	
Bolt: Length: 35 mm (1.38 in.) Pitch: 1.0 mm (0.039 in.) Diam.: 6.0 mm (0.236 in.)	Airbag disposal
Tire Width: 185 mm (7.28 in.) Inner diam.: 360mm (14.17 in.)	Airbag disposal
Tire with disc wheel Width: 185 mm (7.28 in.) Inner diam.: 360 mm (14.17 in.)	Airbag disposal
Vinyl bag	Airbag disposal

BODY ELECTRICAL

PP0KY-01

SST (Special Service **Tools**)

	09843–18020 Diagnosis Check Wire	

PP0KZ-01

RECOMMENDED TOOLS

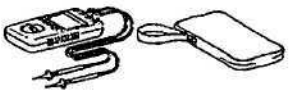	09082–00040 TOYOTA Electrical Tester.	
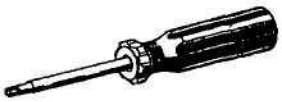	09041–00030 Torx Driver T30.	For removing and installing steering wheel pad
	09042–00010 Torx Socket T30.	For removing and installing steering wheel pad

PP0LD-03

EQUIPMENT

Voltmeter	
Ammeter	
Ohmmeter	
Test lead	
Syphon	Brake fluid level warning switch
Bulb (3.4 W)	Fuel sender gauge
Bulb (21 W)	Turn signal flasher relay
Dry cell battery	Fuel sender gauge
Torque wrench	
Masking tape	Rear window defogger wire
Tin foil	Rear window defogger wire

BODY

SST (Special Service Tools)

PP2DJ-01

	09082-00700 SRS Airbag Deployment Tool	
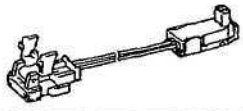	09082-00740 Airbag Deployment Wire Sub-harness No.2	
	09812-00010 Door Hinge Set Bolt Wrench	

PP2DW-01

RECOMMENDED TOOLS

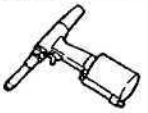	09050–20010 Air Riveter.	
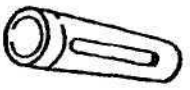	(09050–02010) Dust Cap.	
	(09050–02030) Nose Piece No.2.	
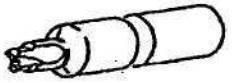	09060–60350 Revet Cutter.	

PP0MV-06

EQUIPMENT

Clip remover	
Torque wrench	
Hog ring pliers	
Tape	To avoid surface damage
Adhesive tape	To avoid surface damage
Double - stick tape	
Adhesive	
Cleaner	
Shop rag	Regulator handle
Knife	Moulding
Heat light	Moulding
Piano wire	Windshield
Sealer gun	
Brush	
Putty spatula	
Wooden block or similar object	For tying both piano wire ends
Plastic sheet	To avoid surface damage
Rope (no projections, difficult to break)	Seat belt pretensioner disposal
Tire Width: 185 mm (7.28 in.) Inner diam: 360 mm (14.17 in.)	Seat belt pretenstoner disposal
Tire with disc wheel Width: 185 mm (7.28 in.) Inner diam 360 mm (14.17 in.)	Seat belt pretinsioner disposal
Vinyl bag	Seat belt pretensioner disposal

PP0MW-02

LUBRICANT

Item	Capacity	Classification
MP grease	–	–

PPGTC-03

SSM (Special Service Materials)

08833–00070	Adhesive 1324, THREE BOND 1324 or equivalent	
08833–00030	Three cement black or equivalent	
08850–00801	Windshield Glass Adhesive Set or equivalent	

AIR CONDITIONING

SST (Special Service Tools)

PP2DN–01

	07110–58060 Air Conditioner Service Tool Set	
	(07117–78050) Refrigerant Charging Gauge	
	(07117–88060) Refrigerant Charging Hose	Discharge (Red)
	(07117–88070) Refrigerant Charging Hose	Suction (Blue)
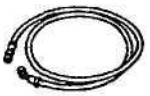	(07117–88080) Refrigerant Charging Hose	Utility (Green)
	(07117–58060) Refrigerant Drain Service Valve	
	(07117–58080) Quick Disconnect Adapter	Discharge (diam. 16 mm)
	(07117–58090) Quick Disconnect Adapter	Suction (diam. 13 mm)
	(07117-58070) T–Joint	
	07116–38360 Gas Leak Detector Assembly	
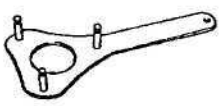	07112–76060 Magnetic Clutch Stopper	
	07112–66040 Magnetic Clutch Remover	

	07114–84020	Snap Ring Pliers	
	07114–84010	Snap Ring Pliers	
	09870–00015	A/C Quick Joint Puller No.1	Suction tube
	09870–00025	A/C Quick Joint Puller No.2	Liquid tube

PP17X-01

RECOMMENDED TOOLS

	09082–00040 TOYOTA Electrical Tester.	
	09216–00021 Belt Tension Gauge .	
	09216–00030 Belt Tension Gauge Cable .	

PP0B8-02

EQUIPMENT

Voltmeter	
Ammeter	
Ohmmeter	
Test lead	
Thermometer	Thermistor, ECT switch
Torque wrench	
Dial indicator	Magnetic clutch
Plastic hammer	Magnetic clutch

PP17Y-02

LUBRICANT

Item	Capacity	Classification
Compressor oil	–	ND–OIL8 or equivalent
When replacing condenser	40 cc (1.4 fl.oz.)	
When replacing evaporator	40 cc (1.4 fl.oz.)	
When replacing compressor	120 cc (4.1 fl.oz.)	

– MEMO –

Connecting rod	1ZZ-FE:		
	Thrust clearance	STD	0.160 - 0.342 mm (0.0063 - 0.0135 in.)
		Maximum	0.342 mm (0.0135 in.)
	Connecting rod thickness		19.788 – 19.840 mm (0.7791 - 0.7811 in.)
	Connecting rod bearing center wall thickness		
	Reference	Mark 1	1.486 – 1.490 mm (0.0585 – 0.0587 in.)
		Mark 2	1.490 – 1.494 mm (0.0587 - 0.0588 in.)
		Mark 3	1.494 - 1.498 mm (0.0588 - 0.0590 in.)
	Connecting rod oil clearance	STD	0.028 - 0.060 mm (0.0011 - 0.0024 in.)
		Maximum	0.08 mm (0.0031 in.)
	Rod out-of-alignment	Maximum per/100 mm (3.94 in.)	0.05 mm (0.0020 in.)
	Rod twist	Maximum per/100 mm (3.94 in.)	0.05 mm (0.0020 in.)
	Bushing inside diameter		20.012 – 20.021 mm (0.7879 - 0.7882 in.)
	Piston pin diameter		20.004 - 20.013 mm (0.7876 - 0.7879 in.)
	Bushing oil clearance	STO	0.005 - 0.011 mm (0.0002 - 0.0004 in.)
		Maximum	0.05 mm (0.0020 in.)
	Connecting rod bolt diameter		
		at tension portion STD	6.6 - 6.7 mm (0.260 - 0.264 in.)
		Minimum	6.4 mm (0.252 in.)
	2ZZ–GE:		
	Thrust clearance	STD	0.160 - 0.342 mm (0.0063 - 0.0135 in.)
		Maximum	0.342 mm (0.0135 in.)
	Connecting rod thickness		19.788 – 19.840 mm (0.7791 - 0.7811 in.)
	Connecting rod bearing center wall thickness		
	Reference	Mark 1	1.482 – 1.486 mm (0.0583 - 0.0585 in.)
		Mark 2	1.486 – 1.490 mm (0.0585 – 0.0587 in.)
		Mark 3	1.490 – 1.494 mm (0.0587 - 0.0588 in.)
	Connecting rod oil clearance	STD	0.028 - 0.052 mm (0.0011 - 0.0020 in.)
		Maximum	0.08 mm (0.0031 in.)
	Rod out-of-alignment	Maximum per/100 mm (3.94 in.)	0.05 mm (0.0020 in.)
	Rod twist	Maximum per/100 mm (3.94 in.)	0.05 mm (0.0020 in.)
	Bushing inside diameter	Connecting rod	20.011 - 20.023 mm (0.7878 - 0.7883 in.)
		Piston	20.013 - 20.025 mm (0.7879 - 0.7884 in.)
	Piston pin diameter		20.004 – 20.016 mm (0.7876 - 0.7880 in.)
	Bushing oil clearance	STD Piston x Piston pin	0.005 - 0.013 mm (0.0002 - 0.0005 in.)
		Piston pin x Connecting rod	0.005 - 0.009 mm (0.0002 - 0.0004 in.)
		Maximum	0.05 mm (0.0020 in.)
	Connecting rod bolt diameter		
		at tension portion STD	6.6 - 6.7 mm (0.260 - 0.264 in.)
		Minimum	6.4 mm (0.252 in.)

Crankshaft	1ZZ–FE:		
	Thrust clearance	STD	0.04 – 0.24 mm (0.0016 – 0.0094 in.)
		Maximum	0.30 mm (0.0118 in.)
	Thrust washer thickness		2.430 - 2.480 mm (0.0957 - 0.0976 in.)
	Main journal oil clearance	STD	0.015 – 0.032 mm (0.0006 - 0.0013 in.)
		Maximum	0.050 mm (0.0020 in.)
	Main journal diameter	Mark 0	47.998 - 48.000 mm (1.8897– 1.8898 in.)
		Mark 1	47.996 - 47.998 mm (1.8896- 1.8897 in.)
		Mark 2	47.994 - 47.996 mm (1.8895– 1.8896 in.)
		Mark 3	47.992 – 47.994mm (1.8894 –1.8895 in.)
		Mark 4	47.990 - 47.992 mm (1.8893 – 1.8894 in.)
		Mark 5	47.988 – 47.990 mm (1.8892 – 1.8893 in.)
	Main bearing center wall thickness		
	Reference	Mark 1	1.993 - 1.996 mm (0.0785 - 0.0786 in.)
		Mark 2	1.996 – 1.999 mm (0.0786 – 0.0787 in.)
		Mark 3	1.999 - 2.002 mm (0.0787 - 0.0788 in.)
		Mark 4	2.002 - 2.005 mm (0.0788 - 0.0789 in.)
	Crank pin diameter		43.992 - 44.000 mm (1.7320 – 1.7323 in.)
	Circle runout	Maximum	0.03 mm (0.0012 in.)
	Main journal taper and out–of round	Maximum	0.02 mm (0.0008 in.)
	Crank pin taper and out–of round	Maximum	0.02 mm (0.0008 in.)
	2ZZ–GE:		
	Thrust clearance	STD	0.04 – 0.24 mm (0.0016 – 0.0094 in.)
		Maximum	0.30 mm (0.0118 in.)
	Thrust washer thickness		2.430 - 2.480 mm (0.0957 - 0.0976 in.)
	Main journal oil clearance	STD	0.016 - 0.032 mm (0.0006 - 0.0013 in.)
		Maximum	0.050 mm (0.0020 in.)
	Main journal diameter	Mark 0	47.998 - 48.000 mm (1.8897 – 1.8898 in.)
		Mark 1	47.996 - 47.998 mm (1.8896 – 1.8897 in.)
		Mark 2	47.994 - 47.996 mm (1.8895 - 1.8896 in.)
		Mark 3	47.992 - 47.994 mm (1.8894 – 1.8895 in.)
		Mark 4	47.990 - 47.992 mm (1.8893 – 1.8894 in.)
		Mark 5	47.988 - 47.990 mm (1.8892 – 1.8893 in.)
	Main bearing center wall thickness		
	Reference	Mark 1	1.989 - 1.992 mm (0.0783 - 0.0784 in.)
		Mark 2	1.992 – 1.995 mm (0.0784 – 0.0785 in.)
		Mark 3	1.995 – 1.998 mm (0.0785 - 0.0787 in.)
		Mark 4	1.998 - 2.001 mm (0.0787 - 0.0788 in.)
		Mark 5	2.001 - 2.004 mm (0.0788 - 0.0789 in.)
	Crank pin diameter		44.992 - 45.000 mm (1.7713 – 1.7717 in.)
	Circle runout	Maximum	0.03 mm (0.0012 in.)
	Main journal taper and out–of round	Maximum	0.02 mm (0.0008 in.)
	Crank pin taper and out–of round	Maximum	0.02 mm (0.0008 in.)

SS0MU-02

TORQUE SPECIFICATION

Part tightened		N·m	kgf·cm	ft-lbf
Camshaft timing sprocket x Camshaft	1ZZ-FE	45	460	33
	2ZZ-GE	54	551	40
Valve timing controller assembly x Camshaft	1ZZ-FE	45	460	33
	2ZZ-GE	54	551	40
Chain vibration damper x Cylinder block	1ZZ-FE	11	113	8
	2ZZ-GE	20.5	209	15
Chain tensioner slipper x Cylinder block	1ZZ-FE	18.5	189	14
	2ZZ-GE	20.5	209	15
Timing chain cover				
1ZZ-FE: (See page EM-25)	10 mm head bolt A	13	133	10
	10 mm head bolt C	9	92	80 in.·lbf
	10 mm head bolt others	11	113	8
	12 mm head bolt D	18.5	189	14
	Stud (E8)	9.3	95	82 in.·lbf
2ZZ-GE: (See page EM-25)	Bolt A	21	214	15
	Bolt B	11	113	8
	Bolt C	9.0	92	80 in.·lbf
	Bolt D	9.0	92	80 in.·lbf
	Stud (E8)	9.3	95	82 in.·lbf
RH engine mounting bracket x Timing chain cover	1ZZ-FE	47	479	35
	2ZZ-GE	49	500	36
Driver belt tensioner x Timing chain cover	Bolt			
	1ZZ-FE	69	704	51
	2ZZ-GE	100	1,020	74
	Nut	29	296	21
Crankshaft position sensor x Timing chain cover		9.0	92	80 in.·lbf
Crankshaft pulley x Crankshaft	1ZZ-FE	138	1,409	102
	2ZZ-GE	120	1,200	87
Chain tensioner x Timing chain cover		9.0	92	80 in.·lbf
Cylinder head cover x Cylinder head	1ZZ-FE w/ Washer	9.0	92	80 in.·lbf
	w/o Washer	11	113	8
	2ZZ-GE	10	100	7
No. 1 ventilation pipe x Cylinder head cover		10	100	7
No. 1 ventilation pipe x Intake manifold	2ZZ-GE	25	255	18
RH engine mounting insulator		52	530	38
PS pump x Engine		36	370	27
Camshaft bearing cap x Cylinder head	1ZZ-FE No. 1	23	235	17
	No. 3	13	133	10
	2ZZ-GE	18.5	189	14
Rocker No. 1 and No. 2 shaft x Cylinder head	2ZZ-GE	7.5	76	66 in.·lbf
Oil control valve housing x Cylinder head	2ZZ-GE	9.0	92	80
Oil pressure switch x Cylinder head	2ZZ-GE	13	130	9
Oil control valve filter x Cylinder head	2ZZ-GE	29	300	22
Cylinder head x Cylinder block	1ZZ-FE 1st	49	500	36
	2nd	Turn 90°	Turn 90°	Turn 90°
	2ZZ-GE 1st	35	375	26
	2nd	Turn 180°	Turn 180°	Turn 180°
Water bypass pipe x Cylinder head		9.0	92	80 in.·lbf

Intake manifold x Cylinder head				
1ZZ-FE:		18.5	189	14
2ZZ-GE: (See page EM-65)	Bolt A	27	275	20
	Bolt B	46	469	34
	Bolt others	34	347	25
Intake manifold stay	2ZZ-GE	24	245	18
Exhaust manifold x Cylinder head	1ZZ-FE	37	377	27
	2ZZ-GE	50	510	37
Lower heat insulator x Exhaust manifold	1ZZ-FE	12	123	9
	2ZZ-GE	20	204	15
Upper heat insulator x Exhaust manifold	1ZZ-FE	12	123	9
	2ZZ-GE	20	204	15
Exhaust manifold stay	1ZZ-FE	49	500	37
	2ZZ-GE	50	510	37
Engine hanger x Cylinder head		38	388	28
LH engine mounting		80	816	59
Rear engine mounting bracket x Transaxle		64	653	47
Rear engine mounting	Through bolt	87	887	64
Suspension member	Bolt A	52	530	32
(See page EM-80)	Bolt B	52	530	32
	Bolt C	113	1,152	83
	Bolt D	157	1,600	116
	Bolt E	39	400	29
	Nut	52	530	32
PS gear x Suspension member		45	460	33
Exhaust pipe		43	440	32
Clutch release cylinder x Transaxle		12	120	9
Clutch release cylinder bracket	Bolt A	12	120	9
	Bolt B	4.9	50	43 in.·lbf
A/C Compressor x Engine		25	255	18
ECM box stay	Nut	12	120	9
	Bolt	18	185	13
ECM box		6.9	70	61 in.·lbf
ECM cover		6.9	70	61 in.·lbf
Air cleaner case		5.0	51	44 in.·lbf
Bearing cap sub-assembly x Cylinder block	12 pointed head 1st	22	225	16
	2nd	44	449	32
	3rd	Turn 45°	Turn 45°	Turn 45°
	4th	Turn 45°	Turn 45°	Turn 45°
	Hexagon head 1ZZ-FE	18.5	189	14
	2ZZ-GE	18	185	13
Screw plug x Bearing cap sub-assembly	2ZZ-GE	43	438	32
Connecting rod cap	1ZZ-FE 1st	20	204	15
	2nd	Turn 90°	Turn 90°	Turn 90°
	2ZZ-GE 1st	30	306	22
	2nd	Turn 90°	Turn 90°	Turn 90°
Oil strainer		9.0	92	80 in.·lbf
Oil pan baffle	2ZZ-GE	9.0	92	80 in.·lbf
Oil pan		9.0	92	80 in.·lbf
Oil filter union		30	306	21

Engine coolant drain union	1ZZ–FE	20	200	14
	2ZZ–GE	25	255	18
Knock sensor		39	400	29
Ventilation case	2ZZ–GE	8.5	87	75 in.·lbf
Water bypass pipe x Cylinder block	1ZZ–FE	9.0	92	80 in.·lbf
	2ZZ–GE			
	Bolt	8.5	87	75 in.·lbf
	Nut	10	100	7
Dipstick guide	1ZZ-FE	11	113	8
	2ZZ–GE	25	255	18
Flywheel	1st	49	500	36
	2nd	Turn 90°	Turn 90°	Turn 90°
Drive plate		88	897	65

EMISSION CONTROL

TORQUE SPECIFICATION

SS0AK-02

Part tightened	N·m	kgf·cm	ft·lbf
Charcoal canister x Body	18	184	13

SFI

SERVICE DATA

SS0AM-02

Fuel pressure regulator	Fuel pressure		301 - 347 kPa (3.1 - 3.5 kgf/cm², 44 - 50 psi)
Fuel pump	Resistance	at 20°C (68°F)	0.2 – 3.0 Ω
Injector	Resistance	at 20°C (68°F)	13.4 – 14.2 Ω
	Injection volume		47 – 58 cm³ (2.7 - 3.3 cu in.) per 15 seconds
	Difference between each cylinder		10 cm³ (0.6 cu in.) or less
	Fuel leakage		One drop or less per 12 minutes
Mass air flow meter	Resistance	at –20°C (–4°F)	13.6 – 18.4 kΩ
		at 20°C (68°F)	2.21 – 2.69 kΩ
		at 60°C (140°F)	0.49-0.67 kΩ
Throttle position sensor	Clearance between stop screw and lever 0 mm (0 in.)	VTA – E2	0.2 – 5.7 kii
	Throttle valve fully open	VTA – E2	2.0 – 10.2 kΩ
	–	VC – E2	2.5 – 5.9 kΩ
Camshaft timing oil control valve	Resistance	at 20°C (68°F)	6.9 – 7.9 ii
VSV (CCV)	Resistance	at 20°C (68°F)	24 – 30 Ω
VSV (Pressure switching valve)	Resistance	at 20°C (68°F)	37 – 44 Ω
		at 120°C (248°F)	51 ±62 Ω
VSV (EVAP)	Resistance	at 20°C (68°F)	27 – 33 Ω
VSV (Intake air control valve)	Resistance	at 20°C (68°F)	37 – 44 Ω
ECT sensor	Resistance	at –20°C (–4°F)	10-20 kΩ
		at 0°C (32°F)	4 – 7 kΩ
		at 20°C (68°F)	2 – 3 kΩ
		at 40°C (104°F)	0.9-1.3 kΩ
		at 60°C (140°F)	0.4 – 0.7 kΩ
		at 80°C (176°F)	0.2 – 0.4 kΩ
Vapor pressure sensor	Power source voltage		4.5 – 5.5 V
	Remove fuel tank cap	Terminal 2 — 3	3.0 – 3.6 V
Heated oxygen sensor	Heater coil resistance		11 – 16 Ω
Fuel cut rpm	Fuel return rpm		1,500 rpm

SS0MR-02

TORQUE SPECIFICATION

Part tightened		N·m	kgf·cm	ft·lbf
Delivery pipe x Cylinder head	1ZZ–FE	19	190	14
	2ZZ–GE	29	290	21
Fuel pump x Fuel tank		4.0	40	35 in.·lbf
Fuel tank band x Body		39	400	29
Throttle body x Intake manifold	1ZZ–FE	21	210	15
	2ZZ–GE	22	220	16
Camshaft timing oil control valve x Cylinder head	1ZZ–FE	7.5	80	66 in.·lbf
	2ZZ–GE	8.5	87	75 in.·lbf
Knock sensor 1 x Cylinder block		44	450	33
Oxygen sensor x Front exhaust pipe		44	450	33

COOLING

SERVICE DATA

5S0MO-02

Thermostat	Valve opening temperature Valve lift at 90°C (194°F)	80.0 -84.0°C (176- 183°F) 10 mm (0.39 in.)
Radiator cap	Relief valve opening pressure STD Minimum	93 – 123 kPa (0.95 - 1.25 kgf/cm^2, 13.5 – 17.8 psi) 79 kPa (0.8 kgf/cm^2, 11.5 psi)
Electric cooling fan	Rotating amperage	5.2 – 8.2 A

SS04F-02

TORQUE SPECIFICATION

Part tightened		N·m	kgf·cm	ft·lbf
Drain plug x Radiator		12.7	130	9
Water pump x Timing chain cover	1ZZ–FE			
(See page CO–7)	Bolt A	9.0	92	80 in.·lbf
	Bolt B	11	113	8
	2ZZ–GE	9.0	92	80 in.·lbf
Water pump pulley x Water pump		15	153	11
Water inlet x Cylinder block		10	100	7
Electric cooling fan x Radiator		6.0	60	53 in.·lbf
Engine coolant reservoir x Radiator upper support		5.0	51	44 in.·lbf
Fan motor x Fan shroud		2.55	26	23 in.·lbf
Fan x Fan motor		6.18	63	55 in.·lbf

LUBRICATION

SERVICE DATA

SS01MQ-02

Oil pressure		1ZZ–FE	
		at idle speed	29 kPa (0.3 kgf/cm², 43 psi) or more
		at 3,000 rpm	294 – 539 kPa (3.0 - 5.5 kgf/cm², 43 – 78 psi)
		2ZZ–GE	
		at idle speed	39.2 kPa (0.4 kgf/cm², 5.7 psi) or more
	Oil control valve housing	2ZZ–GE	
		at idle speed	39.2 kPa (0.4 kgf/cm², 5.7 psi) or more
Oil pump	Side clearance	STD	0.025 - 0.075 mm (0.001 0 - 0.0030 in.)
		Maximum	0.15 mm (0.0059 in.)
	Tip clearance	STD	0.060-0.180 mm (0.0024-0.0071 in.)
		Maximum	0.35 mm (0.0138 in.)
	Body clearance	STD	0.100-0.180 mm (0.0039-0.0071 in.)
		Maximum	0.30 mm (0.0118 in.)

SS0MR-02

TORQUE SPECIFICATION

Part tightened		N·m	kgf·cm	ft·lbf
Oil pressure switch x Cylinder block		13	130	9
Oil pressure switch x Oil control valve housing		13	130	9
Drain plug x Oil pan		37	378	27
Oil pump body cover x Oil pump body		10.5	107	8
Plug x Oil pump	1ZZ–FE	37	375	27
	2ZZ–GE	49	500	36
Oil pump x Cylinder block		9.0	92	80 in.·lbf
Oil nozzle x Cylinder block		9.0	92	80 in.·lbf

IGNITION

SERVICE DATA

SS0MS-06

Spark plug	Recommended spark plug	**1ZZ–FE**	
		DENSO	**SK16R11**
		NGK	IFR5A11
		2ZZ–GE	
		DENSO	**SK20R11**
		NGK	IFR6A11
Camshaft position- sensor	Resistance	at cold	**835 – 1,400 Ω**
		at hot	**1,060 – 1,645 Ω**
Crankshaft position sensor	Resistance	at cold	**1,630 – 2,740 Ω**
		at hot	**2,065 – 3,225 Ω**

SS0MT-05

TORQUE SPECIFICATION

Part tightened	N·m	kgf·cm	ft·lbf
Spark plug x Cylinder head	18	184	13
Ignition coil (w/ Igniter) x Cylinder head cover	7.5	77	66 in.·lbf
Camshaft position sensor x Cylinder head	8.8	90	78 in.·lbf
Crankshaft position sensor x Timing chain cover	8.8	90	78 in.·lbf

STARTING

SERVICE DATA

SS0MU-02

Starter	Rated voltage and output power		12V 1.4kW
			12 V 1.2kW
	No-load characteristics	Current	90 A or less at 11.5 V
		rpm	3,000 rpm or more
	Brush length	STD	15.5 mm (0.610 in.)
		Minimum	10.0 mm (0.394 in.)
	Spring installed load	STD	
		1.4 kW	17.6 - 23.5 N (1.8 - 2.4 kgf, 4.0 - 5.3 lbf)
		1.2 kW	13.7 – 19.6 N (1.4 – 2.0 kgf, 3.1 – 4.6 lbf)
		Minimum	
		1.4 kW	11.8 N (1.2 kgf, 2.6 lbf)
		1.2 kW	8.8 N (0.9 kgf, 2.0 lbf)
	Commutator		
	Diameter	STD	30.0 mm (1.181 in.)
		Minimum	29.0 mm (1.412 in.)
	Undercut depth	STD	0.6 mm (0.024 in.)
		Minimum	0.2 mm (0.008 in.)
	Circle runout	Maximum	0.05 mm (0.0020 in.)
	Magnetic switch		
	Contact plate for wear	Maximum	0.9 mm (0.035 in.)

SS0MV-02

TORQUE SPECIFICATION

Part tightened	N·m	kgf-cm	ft·lbf
Starter x Transaxle	37	380	28
End cover x Brush holder	3.8	39	34 in.·lbf
Starter housing x Magnetic switch	9.3	95	82 in.·lbf
End cover x Starter housing	9.3	95	82 in.·lbf
Lead wire x Terminal C of starter	5.9	60	52 in.·lbf
Terminal nut x Terminal C of starter, Terminal 30 of starter	17	173	12
Magnetic switch end cover x Magnetic switch	2.5	26	23 in.·lbf

CHARGING

SERVICE DATA

SS0MW-02

Battery	Voltage	at 20°C (68°F)	12.7-12.9 V
	Specific gravity	at 20°C (68°F)	1.25–1.29
Generator	Rated output		12V 80 A
	Rotor coil resistance	M/T	2.7 – 3.1 Ω
		A/T	2.1 – 2.5 Ω
	Slip ring diameter	STD	14.2 – 14.4 mm (0.559 - 0.567 in.)
		Minimum	12.8 mm (0.504 in.)
	Brush exposed length	STD	10.5 mm (0.413 in.)
		Minimum	1.5 mm (0.059 in.)
Voltage regulator	Regulating voltage		13.2 – 14.8 V

SSQMDX-02

TORQUE SPECIFICATION

Part tightened		N·m	kgf·cm	ft·lbf
Bearing retainer x Drive end frame		3.0	31	27 in.·lbf
Rectifier end frame x Drive end frame	Nut A	4.5	46	40 in.·lbf
	Nut B	5.4	55	48 in.·lbf
Generator pulley x Rotor		111	1,125	81
Rectifier end frame x Brush holder, Voltage regulator		2.0	20	17 in.·lbf
Rectifier holder x Coil lead on rectifier end frame		2.9	30	25 in.·lbf
Rear end cover x Rectifier holder		4.4	45	39 in.·lbf
Plate terminal x Rectifier holder	Nut	4.4	45	39 in.·lbf
	Bolt	3.9	39	35 in.·lbf
Terminal insulator x Rectifier holder		4.1	42	36 in.·lbf
Generator x RH engine mount bracket		25	20	18
Generator x Cylinder block	1ZZ–FE	54	550	40
	2ZZ–GE	58	590	43
Generator x Generator bracket		29	295	21

CLUTCH

SERVICE DATA

SS01H-03

Pedal height from asphalt sheet	Standard pedal	135.6 – 145.6 mm (5.339 - 5.732 in.)
	Sport pedal	136.9 – 146.9 mm (5.390 - 5.783 in.)
Pedal freeplay		1.0 – 5.0 mm (0.039 – 0.197 in.)
Push rod play at pedal top		5.0 – 15.0 mm (0.197 – 0.591 in.)
Clutch release point from pedal full stroke end position		25 mm (0.98 in.) or more
Slotted spring pin protrusion		1.5 - 2.5 mm (0.059 - 0.098 in.)
Disc rivet head depth	Min.	0.3 mm (0.012 in.)
Disc runout	Max.	0.8 mm (0.031 in.)
Flywheel runout	Max.	0.1 mm (0.004 in.)
Diaphragm spring finger wear	Max. depth	0.5 mm (0.020 in.)
Diaphragm spring finger wear	Max. width	6.0 mm (0.236 in.)
Diaphragm spring tip non-alignment	Max.	0.5 mm (0.020 in.)

SS09J-02

TORQUE SPECIFICATION

Part tightened	N·m	kgf·cm	ft·lbf
Clutch line union	15	155	11
Master cylinder installation nut	12	120	9
Bleeder plug	8.4	85	74 in.·lbf
Release cylinder installation bolt	12	120	9
Clutch line clamp x Clutch line bracket	4.9	50	43 in.·lbf
Flywheel set bolt •	49	500	36
Clutch cover x Flywheel	19	195	14
Release fork support	37	375	27

MANUAL TRANSAXLE (C56)

SERVICE DATA

S502P-03

Input shaft roller bearing journal diameter	Min.	24.985 mm (0.9837 in.)
Input shaft 3rd gear journal diameter	Min.	30.985 mm (1.2199 in.)
Input shaft 4th gear journal diameter	Min.	28.985 mm (1.1411 in.)
Input shaft 5th gear journal diameter	Min.	24.885 mm (0.9797 in.)
Input shaft runout	Max.	0.03 mm (0.0012 in.)
Output shaft roller bearing journal diameter	Min.	32.985 mm (1.2986 in.)
Output shaft 1st gear journal diameter	Min.	37.985 mm (1.4955 in.)
Output shaft 2nd gear journal diameter	Min.	31.985 mm (1.2592 in.)
Output shaft runout	Max.	0.03 mm (0.0012 in.)
Gear thrust clearance 1st	STD Max.	0.10 - 0.40 mm (0.0039 - 0.0157 in.) 0.40 mm (0.0157 in.)
Gear thrust clearance 2nd	STD Max.	0.10 - 0.55 mm (0.0039 - 0.0217 in.) 0.55 mm (0.0217 in.)
Gear thrust clearance 3rd	STD Max.	0.10 – 0.35 mm (0.0039 – 0.0138 in.) 0.35 mm (0.0138 in.)
Gear thrust clearance 4th	STD Max.	0.10 – 0.55 mm (0.0039 – 0.0217 in.) 0.55 mm (0.0217 in.)
Gear thrust clearance 5th	STD Max.	0.10 - 0.57 mm (0.0039 - 0.0224 in.) 0.57 mm (0.0224 in.)
Gear radial clearance 1st, 2nd, 3rd, 4th and 5th (KOYO made)	STD Max.	0.015 - 0.058 mm (0.0006 - 0.0023 in.) 0.058 mm (0.0023 in.)
Gear radial clearance 1st, 2nd, 3rd, 4th and 5th (NSK made)	STD Max.	0.015 - 0.056 mm (0.0006 - 0.0022 in.) 0.056 mm (0.0022 in.)
No. 3 gear shift fork to No. 3 hub sleeve clearance	Max.	0.5 mm (0.020 in.)
No. 2 gear shift fork to No. 2 hub sleeve clearance	Max.	0.35 mm (0.014 in.)
No. 1 gear shift fork to reverse gear clearance	Max.	0.35 mm (0.014 in.)
Synchronizer ring to gear clearance 1st, 4th and 5th	Min.	0.75 mm (0.0295 in.)
Synchronizer ring to gear clearance 3rd	Min.	0.65 mm (0.0256 in.)
Synchronizer ring to gear clearance 2nd	Min.	0.70 mm (0.0276 in.)
Drive in depth		
Input shaft front oil seal		15.8 ± 0.2 mm (0.622 ± 0.008 in.)
Input shaft front bearing		0 - 0.3 mm (0 - 0.012 in.)
Transmission case bushing		0.80 – 1.30 mm (0.0315 - 0.0512 in.)
Transmission case oil seal (Shift and select lever shaft side)		10.0 ± 0.3 mm (0.394 ± 0.012 in.)
Transmission case oil seal (Differential case side)		9.9 ± 0.3 mm (0.390 ± 0.012 in.)
Transaxle case oil seal		1.9 ± 0.3 mm (0.075 ± 0.012 in.)
Select inner lever slotted spring pin		0 ± 0.5 mm (0 ± 0.020 in.)
No. 1 shift inner lever slotted spring pin		0 ± 0.5 mm (0 ± 0.020 in.)
No. 2 shift inner lever slotted spring pin		3.5 ± 0.5 mm (0.138 ± 0.020 in.)

Input shaft snap ring thickness		
No. 2 clutch hub	Mark 0	2.30 mm (0.0906 in.)
	Mark 1	2.36 mm (0.0929 in.)
	Mark 2	2.42 mm (0,0953 in.)
	Mark 3	2.48 mm (0.0976 in.)
	Mark 4	2.54 mm (0.1000 in.)
	Mark 5	2.60 mm (0.1024 in.)
Rear radial ball bearing	Mark A	2.29 mm (0.0902 in.)
	Mark B	2.35 mm (0.0925 in.)
	Mark C	2.41 mm (0.0949 in.)
	Mark D	2.47 mm (0.0972 in.)
	Mark E	2.53 mm (0.0996 in.)
	Mark F	2.59 mm (0.1020 in.)
Output shaft snap ring thickness		
No. 1 clutch hub	Mark A	2.50 mm (0.0984 in.)
	Mark B	2.56 mm (0.1008 in.)
	MarkC	2.62 mm (0.1031 in.)
	Mark D	2.68 mm (0.1055 in.)
	Mark E	2.74 mm (0.1079 in.)
	Mark F	2.80 mm (0.1102 in.)
Front bearing inner race	Mark 7	1.85 mm (0.0728 in.)
	Mark 8	1.90 mm (0.0748 in.)
	Mark 1	1.95 mm (0.0768 in.)
	Mark 2	2.00 mm (0.0787 in.)
	Mark 3	2.05 mm (0.0807 in.)
	Mark 4	2.10 mm (0.0827 in.)
	Mark 5	2.15 mm (0.0846 in.)
	Mark 6	2.20 mm (0.0866 in.)
No. 3 clutch hub	Mark A	2.25 mm (0.0886 in.)
	Mark B	2.31 mm (0.0909 in.)
	MarkC	2.37 mm (0.0933 in.)
	Mark D	2.43 mm (0.0957 in.)
	Mark E	2.49 mm (0.0980 in.)
	MarkF	2.55 mm (0.1004 in.)
	Mark G	2.61 mm (0.1028 in.)
Differential tapered roller bearing prebad (at starting)(For use with SST)		
	New bearing	0.8 – 1 .6N·m(8 – 1 6 kgf·cm, 6.9 – 1 3.9 in.·lbf)
	Reused bearing	0.5 – 1 .0 N·m (5 – 10 kgf·cm, 4.3 - 8.7 in.·lbf)
Differential pinion to side gear backlash		0.05 mm - 0.20 mm (0.0020 - 0.0079 in.)
Differential side gear thrust washer thickness		0.95 mm (0.0374 in.)
		1.00 mm (0.0394 in.)
		1.05 mm (0.0413 in.)
		1.10 mm (0.0433 in.)
		1.15 mm (0.0453 in.)
		1.20 mm (0.0472 in.)

Differential tapered roller bearing adjusting shim thickness	
Mark AA	2.10 mm (0.0827 in.)
Mark BB	2.15 mm (0.0846 in.)
Mark CC	2.20 mm (0.0866 in.)
Mark DD	2.25 mm (0.0886 in.)
Mark EE	2.30 mm (0.0906 in.)
Mark FF	2.35 mm (0.0925 in.)
Mark GG	2.40 mm (0.0945 in.)
Mark HH	2.45 mm (0.0965 in.)
Mark JJ	2.50 mm (0.0984 in.)
Mark KK	2.55 mm (0.1004 in.)
Mark LL	2.60 mm (0.1024 in.)
Mark MM	2.65 mm (0.1043 in.)
Mark NN	2.70 mm (0.1063 in.)
Mark PP	2.75 mm (0.1083 in.)
Mark QQ	2.80 mm (0.1102 in.)
Mark RR	2.85 mm (0.1122 in.)
Mark SS	2.90 mm (0.1142 in.)
Mark TT	2.95 mm (0.1161 in.)
Mark UU	3.00 mm (0.1181 in.)

SS02O-04

TORQUE SPECIFICATION

Part tightened		N·m	kgf·cm	ft-lbf
No. 2 cylinder head cover		7.0	71	62 in.·lbf
Radiator reservoir set bolt		4.9	50	43 in.·lbf
ECM cover x ECM box		6.9	70	61 in.·lbf
ECM box set bolt		6.9	70	61 in.·lbf
Battery carrier x Body	Bolt	18	185	13
	Nut	12	120	9
Clutch line set bolt	Bolt A	12	120	9
(See page MX-4)	Bolt B	4.9	50	43 in.·lbf
Clutch release cylinder x Transaxle		12	120	9
Starter x Transaxle		37	378	28
Transaxle x Engine (From transaxle side)		64	650	47
Transaxle x Engine (From engine side)	Bolt A	47	480	35
(See page MX-4)	Bolt B	23	230	17
No. 1 and No. 2 engine hangers set bolt		38	387	28
Engine left mounting bracket x Transaxle		60	610	44
Engine left mounting bracket x Engine teft mounting insulator		80	820	59
Oxygen sensor x Front exhaust pipe		44	450	33
Front exhaust pipe		43	440	32
PS gear assembly x Suspension crossmember		45	459	33
Engine rear mounting insulator x Engine rear mounting bracket		87	890	64
Engine rear mounting bracket x Transaxle		64	650	47
Passenger airbag assembly		20	204	15
Airbag sensor assembly x Body		20	205	15
Steering wheel lock nut		34	350	25
Shift lever assembly x Body		12	120	9
Shift cable retainer x Body		4.9	50	43 in.·lbf
Shift and select control cable bracket		4.9	50	43 in.·lbf
Filler and drain plugs		39	400	29
Vehicle speed sensor		11	115	8
Back-up light switch		40	410	30
Control cable bracket x Transaxle case		25	250	18
Control shaft assembly		12	120	9
Selecting bellcrank assembly x Transmission case		25	250	18
Lever lock pin set nut		12	120	9
Transmission case x Transmission case cover		18	185	13
Lock ball assembly (Shift and select lever shaft side)		29	300	22
Control shaft cover x Transmission case		20	200	14
5th driven gear lock nut		118	1,200	87
No. 1, No. 2 and No. 3 gear shift forks set bolt		16	160	12
Rear bearing retainer x Transmission case		27	280	20
Reverse idler gear shaft lock bolt		29	300	22
Straight screw plug		25	250	18
Lock ball assembly (Reverse shift fork side)		39	400	29
Transmission case x Transaxle case		29	300	22

Oil receiver pipe set bolt	17	175	13
Reverse shift arm bracket x Transaxle case	17	175	13
No. 1 gear shift head set bolt	16	160	12
Output shaft front bearing lock plate set bolt	11	115	8
Transaxle case receiver x Transaxle case	11	115	8
Straight screw plug (Reverse restrict pin)	13	130	9
Differential case x Ring gear	77	790	57

MANUAL TRANSAXLE (C60)

SERVICE DATA

SS032-02

Input shaft roller bearing journal diameter	Min.	24.985 mm (0.9837 in.)
Input shaft 3rd gear journal diameter	Mm.	30.985 mm (1.2199 in.)
Input shaft 4th gear journal diameter	Min.	28.985 mm (1.1411 in.)
Input shaft 5th gear journal diameter	Min.	24.885 mm (0.9797 in.)
Input shaft 6th gear journal diameter	Min.	21.991 mm (0.8658 in.)
Input shaft runout	Max.	0.03 mm (0.0012 in.)
Output shaft roller bearing journal diameter	Min.	32.985 mm (1.2986 in.)
Output shaft 1 st gear journal diameter	Min.	37.985 mm (1.4955 in.)
Output shaft 2nd gear journal diameter	Min.	31.985 mm (1.2592 in.)
Output shaft runout	Max.	0.03 mm (0.0012 in.)
Gear thrust clearance 1st	STD Max.	0.10 - 0.40 mm (0.0039 - 0.0157 in.) 0.40 mm (0.0157 in.)
Gear thrust clearance 2nd	STD Max.	0.10-0.55 mm (0.0039 – 0.0217 in.) 0.55 mm (0.0217 in.)
Gear thrust clearance 3rd	STD Max.	0.10 - 0.35 mm (0.0039 - 0.0138 in.) 0.35 mm (0.0138 in.)
Gear thrust clearance 4th	STD Max.	0.10 - 0.55 mm (0.0039 - 0.0217 in.) 0.55 mm (0.0217 in.)
Gear thrust clearance 5th	STD Max.	0.10 - 0.62 mm (0.0039 - 0.0244 in.) 0.62 mm (0.0244 in.)
Gear thrust clearance 6th	STD Max.	0.10 - 0.60 mm (0.0039 - 0.0236 in.) 0.60 mm (0.0236 in.)
Gear radial clearance 1st, 2nd, 3rd and 4th (KOYO made)	STD Max.	0.15 - 0.58 mm (0.0006 - 0.0023 in.) 0.058 mm (0.0023 in.)
Gear radial clearance 1st, 2nd, 3rd and 4th (NSK made)	STD Max.	0.015 - 0.056 mm (0.0006 - 0.0022 in.) 0.056 mm (0.0022 in.)
Gear radial clearance 5th	STD Max.	0.015 - 0.056 mm (0.0006 - 0.0022 in.) 0.056 mm (0.0022 in.)
Gear radial clearance 6th	STD Max.	0.009 - 0.050 mm (0.0003 - 0.0020 in.) 0.050 mm (0.0020 in.)
No. 3 gear shift fork to No. 3 hub sleeve clearance	Max.	0.89 mm (0.035 in.)
No. 2 gear shift fork to No. 2 hub sleeve clearance	Max.	0.35 mm (0.014 in.)
No. 1 gear shift fork to reverse gear clearance	Max.	0.35 mm (0.014 in.)
Synchronizer ring to gear clearance 1 st, 4th, 5th and 6th	Min.	0.75 mm (0.0295 in.)
Synchronizer ring to gear clearance 3rd	Min.	0.65 mm (0.0256 in.)
Synchronizer ring to gear clearance 2nd	Min.	0.70 mm (0.0276 in.)
Drive in depth Input shaft front oil seal Input shaft front bearing Transmission case bushing Transmission case oil seal (Shift and select lever shaft side) No. 1 and No. 2 shift inner lever slotted spring pin Transmission case oil seal (Differential case side) Transaxle case oil seal		 15.8 ± 0.2 mm (0.622 ± 0.008 in.) 0 - 0.3 mm (0 - 0.012 in.) 0.80 – 1.30 mm (0.0315 - 0.0512 in.) 10.0 ± 0.3 mm (0.394 ± 0.012 in.) 0 ± 0.5 mm (0 ± 0.020 in.) 9.9 ± 0.3 mm (0.390 ± 0.012 in.) 1.9 ± 0.3 mm (0.075 ± 0.012 in.)
Differential side gear backlash		0.05 - 0.20 mm (0.0020 - 0.0079 in.)

Differential side gear thrust washer thickness		
		0.95 mm (0.0374 in.)
		1.00 mm (0.0394 in.)
		1.05 mm (0.0413 in.)
		1.10 mm (0.0433 in.)
		1.15 mm (0.0453 in.)
		1.20 mm (0.0472 in.)
Differential tapered roller bearing preload (at starting) (For use with SST)		
	New bearing	0.8 - 1.6 N·m (8 - 16 kgf·cm, 6.9 - 13.9 in.·lbf)
	Reused bearing	0.5 - 1.0 N·m (5 - 10 kgf·cm, 4.3 - 8.7 in.·lbf)
Input shaft snap ring thickness		
No. 2 clutch hub	Mark 0	2.30 mm (0.0906 in.)
	Mark 1	2.36 mm (0.0929 in.)
	Mark 2	2.42 mm (0.0953 in.)
	Mark 3	2.48 mm (0.0976 in.)
	Mark 4	2.54 mm (0.1000 in.)
	Mark 5	2.60 mm (0.1024 in.)
No. 3 clutch hub	Mark A	1.75 mm (0.0689 in.)
	Mark B	1.80 mm (0.0709 in.)
	Mark C	1.85 mm (0.0728 in.)
	Mark D	1.90 mm (0.0748 in.)
	Mark E	1.95 mm (0.0768 in.)
	Mark F	2.00 mm (0.0787 in.)
	Mark G	2.05 mm (0.0807 in.)
	Mark H	2.10 mm (0.0827 in.)
	Mark J	2.15 mm (0.0846 in.)
Input shaft center radial ball bearing	Mark A	2.29 mm (0.0902 in.)
	Mark B	2.35 mm (0.0925 in.)
	Mark C	2.41 mm (0.0949 in.)
	Mark D	2.47 mm (0.0972 in.)
	Mark E	2.53 mm (0.0996 in.)
	Mark F	2.59 mm (0.1020 in)
Input shaft rear radial ball bearing	Mark A	1.70 mm (0.0669 in.)
	Mark B	1.75 mm (0.0689 in.)
	Mark C	1.80 mm (0.0709 in.)
	Mark D	1.85 mm (0.0728 in.)
	Mark E	1.90 mm (0.0748 in.)
	Mark F	1.95 mm (0.0768 in.)
	Mark G	2.00 mm (0.0787 in.)
	Mark H	2.05 mm (0.0807 in.)
	MarkJ	2.10 mm (0.0827 in.)
	Mark K	2.15 mm (0.0846 in.)
	Mark L	2.20 mm (0.0866 in.)
	Mark M	2.25 mm (0.0886 in.)

Output shaft snap ring thickness		
No. 1 dutch hub	Mark A	2.50 mm (0.0984 in.)
	Mark B	2.56 mm (0.1008 in.)
	Mark C	2.62 mm (0.1031 in.)
	Mark D	2.68 mm (0.1055 in.)
	Mark E	2.74 mm (0.1079 in.)
	Mark F	2.80 mm (0.1102 in.)
Front bearing inner race	Mark 7	1.85 mm (0.0728 in.)
	Mark 8	1.90 mm (0.0748 in.)
	Mark 1	1.95 mm (0.0768 in.)
	Mark 2	2.00 mm (0.0787 in.)
	Mark 3	2.05 mm (0.0807 in.)
	Mark 4	2.10 mm (0.0827 in.)
	Mark 5	2.15 mm (0.0846 in.)
	Mark 6	2.20 mm (0.0866 in.)
Output shaft rear radial ball bearing	Mark B	2.31 mm (0.0909 in.)
	Mark C	2.37 mm (0.0933 in.)
	Mark D	2.43 mm 0.0957 in.)
	Mark E	2.49 mm (0.0980 in.)
	Mark F	2.55 mm (0.1004 in.)
	Mark G	2.61 mm (0.1028 in.)
	Mark H	2.67 mm (0.1051 in.)
	Mark J	2.73 mm (0.1075 in.)
	Mark K	2.79 mm (0.1098 in.)
	Mark L	2.85 mm (0.1122 in.)
	Mark M	2.91 mm (0.1146 in.)
Differential tapered roller bearing adjusting shim thickness		
	Mark AA	2.10 mm (0.0827 in.)
	Mark BB	2.15 mm (0.0846 in.)
	MarK CC	2.20 mm (0.0866 in.)
	Mark DD	2.25 mm (0.0886 in.)
	Mark EE	2.30 mm (0.0906 in.)
	Mark FF	2.35 mm (0.0925 in.)
	Mark GG	2.40 mm (0.0945 in.)
	Mark HH	2.45 mm (0.0965 in.)
	Mark JJ	2.50 mm (0.0984 in.)
	Mark KK	2.55 mm (0.1004 in.)
	Mark LL	2.60 mm (0.1024 in.)
	Mark MM	2.65 mm (0.1043 in.)
	Mark NN	2.70 mm (0.1063 in.)
	Mark PP	2.75 mm (0.1083 in.)
	Mark QQ	2.80 mm (0.1102 in.)
	Mark RR	2.85 mm (0.1122 in.)
	Mark SS	2.90 mm (0.1142 in.)
	Mark TT	2.95 mm (0.1161 in.)
	Mark UU	3.00 mm (0.1181 in.)

SS033-02

TORQUE SPECIFICATION

Part tightened		N·m	kgf·cm	ft·lbf
No. 2 cylinder head cover		7.0	71	62 in.·lbf
Radiator reservoir set bolt		4.9	50	43 in.-lbf
ECM cover x ECM box		6.9	70	61 in.·lbf
ECM box set bolt		6.9	70	61 in.·lbf
Battery carrier x Body	Bolt	18	185	13
	Nut	12	120	9
Clutch line set bolt	Bolt A	12	120	9
(See page MX–4)	Bolt B	4.9	50	43 in.·lbf
Clutch release cylinder x Transaxle		12	120	9
Starter x Transaxle		37	378	28
Transaxle x Engine (From transaxle side)		64	650	47
Transaxle x Engine (From engine side)	Bolt A	47	480	35
(See page MX–4)	Bolt B	23	230	17
No. 1 and No. 2 engine hangers set bolt		38	387	28
Engine left mounting bracket x Transaxle		60	610	44
Engine left mounting bracket x Engine left mounting insulator		80	820	59
Oxygen sensor x Front exhaust pipe		44	450	33
Front exhaust pipe		43	440	32
PS gear assembly x Suspension crossmember		45	459	33
Engine rear mounting insulator x Engine rear mounting bracket		87	890	64
Engine rear mounting bracket x Transaxle		64	650	47
Passenger airbag assembly		20	204	15
Airbag sensor assembly x Body		20	205	15
Steering wheel lock nut		34	350	25
Shift lever assembly x Body		12	120	9
Shift cable retainer x Body		4.9	50	43 in.·lbf
Shift and select control cable bracket		4.9	50	43 in.·lbf
Filler and drain plug		39	400	29
Plug		39	400	29
Vehicle speed sensor		11	115	8
Back–up light switch		40	410	30
Control cable bracket x Transaxle case		25	250	18
Control shaft assembly		12	120	9
Selecting bellcrank assembly x Transmission case		25	250	18
Lever lock pin set nut		12	120	9
Transmission case cover x Transmission case		18	185	13
Lock ball assembly		29	300	22
Control shaft cover assembly x Transmission case		20	200	14
No. 1, No. 2 and No. 3 gear shift fork x Gear shift fork shaft		16	160	12
No. 1 gear shift head x Gear shift fork shaft		16	160	12
Rear bearing retainer x Transmission case		27	280	20
Reverse idler gear shaft lock bolt		29	300	22
Straight screw plug (Gear shift fork shaft)		25	250	18

Straight screw plug (See page MX-12)	Plug A Plug B	13 39	130 400	9 29
Transmission case x Transaxle case		29	300	22
Reverse shift arm bracket x Transaxle case		17	175	13
Output shaft front bearing lock plate set bolt		11	115	8
Transaxle case receiver x Transaxle case		11	115	8
Oil receiver pipe		17	175	13
Ring gear x Differential case		77	790	57

AUTOMATIC TRANSAXLE (U240E)

SERVICE DATA

SS0EB-03

Line pressure (Wheel locked)		
	Engine idling	
	D position	372 - 412 kPa (3.8 - 4.2 kgf/cm², 54 – 59 psi)
	R position	672 - 742 kPa (6.9 - 7.6 kgf/cm², 97 - 107 psi)
	AT stall (Throttle valve fully opened)	
	D position	931 – 1,031 kPa (9.5 – 10.5 kgf/cm², 134 – 149 psi)
	R position	1,768 – 1,968 kPa (18.0 - 20.1 kgf/cm², 255 – 284 psi)
Engine stall revolution	D position	2,220 – 2,520 rpm
Time lag	N → D position	Less than 1.2 seconds
	N → R position	Less than 1.5 seconds
Engine idle speed (A/C OFF)	N position	650 ± 50 rpm
Drive plate runout	Max.	0.20 mm (0.0079 in.)
Torque converter clutch runout	Max.	0.30 mm (0.0118 in.)
Torque converter clutch installation distance		More than 12.75 mm (0.5020 in.)
Differential oil seal drive in depth	LH side	2.7 ± 0.5 mm (0.106 ± 0.020 in.)
	RH side	0 ± 0.5 mm (0 ± 0.020 in.)
Shift schedule		
D position		
(Throttle valve fully opened)	1 → 2	60 - 67 km/h (37 - 42 mph)
	2 → 3	112 – 123 km/h (70 - 76 mph)
	3 → 4	179-191 km/h (111 – 119 mph)
	4 → 3	173 – 186 km/h (107 – 115 mph)
	3 → 2	105 – 116 km/h (65 - 72 mph)
	2 → 1	44 – 50 km/h (27 - 31 mph).
(Throttle valve fully closed)	3 → 4	40 – 45 km/h (25 - 28 mph)
	4 → 3	14-19 km/h (9 – 12 mph)
2 position		
(Throttle valve fully opened)	1 → 2	60 - 67 km/h (37 - 42 mph)
	3 → 2	112 – 123 km/h (70 - 76 mph)
	2 → 1	44 – 50 km/h (27 – 31 mph)
L position		
(Throttle valve fully opened)	3 → 2	112 – 123 km/h (70 – 76 mph)
	2 → 1	52 – 58 km/h (32 - 36 mph)
Lock-up point	Throttle valve opening 5 %	
3rd gear	Lock-up ON	220 - 234 km/h (137 – 145 mph)
	Lock-up OFF	220-234 km/h (137 – 145 mph)
O/D gear	Lock-up ON	75 - 81 km/h (47 - 50 mph)
	Lock-up OFF	64 - 71 km/h (40 - 44 mph)

SS13Z-03

TORQUE SPECIFICATION

Part tightened		N·m	kgf·cm	ft·lbf
Vehicle speed sensor x Transaxle		5.5	56	49 in.·lbf
Input turbine speed sensor x Transaxle		11	115	8
Counter gear speed sensor x Transaxle		11	115	8
ATF temperature sensor x Transaxle		6.6	67	58 in.·lbf
Oil pan x Transaxle		7.8	80	69 in.·lbf
Control cable x Control shaft		12	120	9
Control shaft x Park/neutral position switch		13	130	9
Park/neutral position switch x Transaxle	Bolt	5.4	55	48 in.·lbf
	Nut	6.9	70	61 n.·lbf
Shift solenoid valve x Valve body	12 mm (0.47 in.)	6.6	67	58 in.·lbf
	45 mm (1.77 in.)	11	110	8
Valve body x Transaxle		11	110	8
Oil strainer x Valve body		11	110	8
Drain plug x Oil pan		49	500	36
Steering wheel set nut		34	350	25
Front passenger airbag assembly x Instrument panel reinforcement		20	204	15
Floor shift assembly x Body		12	120	9
Hood set bolt		13	130	9
No. 2 cylinder head cover		7.0	71	62 in.·lbf
ECM case set bolt		6.9	70	61 in.·lbf
ECM set bolt		6.9	70	61 in.·lbf
ECM bracket set bolt		18	185	13
ECM bracket set nut		12	120	9
Radiator reservoir set bolt		4.9	50	43 in.·lbf
Ground cable x Transaxle		18	185	13
Starter x Transaxle		37	378	28
Drain plug x Differential		54	550	40
Stabilizer bar link x Shock absorber		44	450	32
Lower suspension arm x Lower ball joint		142	1,450	105
Drive shaft lock nut		216	2,200	159
Steering knuckle x Tie rod end		49	500	33
Drive shaft bearing lock bolt		64	650	47
Power steering gear assembly set bolt		45	459	33
Center member x Body		39	398	29
Center member x Engine front mounting		52	530	38
Suspension member x Body	Front side	113	1,152	83
	Rear side	157	1,601	116
Engine rear mounting insulator x Engine rear mounting bracket		87	890	64
Engine rear mounting insulator x Suspension member		52	530	38
Engine hanger set bolt		38	387	28
Engine left mounting x Engine left mounting bracket		80	816	59
Torque converter clutch x Drive plate		41	418	30
Transaxle housing x Engine block		See page AX–30		
Drive plate x Crankshaft		88	897	65

AUTOMATIC TRANSAXLE (U341E)

SERVICE DATA

SS16T-01

Line pressure (Wheel locked)		
	Engine idling	
	D position	372 - 407 kPa (3.8 - 4.2 kgf/cm², 54 – 60 psi)
	R position	588 – 683 kPa (6.0 - 7.0 kgf/cm², 85 – 100 psi)
	at stall (Throttle valve fully opened)	
	D position	1,153 – 1,264 kPa (11.8 – 12.9 kgf/cm², 168 – 183 psi)
	R position	1,589 – 1,761 kPa (16.2 – 18.0 kgf/cm², 230 - 256 psi)
Engine stall revolution	D and R positions	2,050 ± 200 rpm
Time lag	N → D position	Less than 1.2 seconds
	N → R position	Less than 1.5 seconds
Engine idle speed (A/C OFF)	N position	750 ± 50 rpm
Drive plate runout	Max.	0.20 mm (0.0079 in.)
Torque converter runout	Max.	0.30 mm (0.0118 in.)
Torque converter installation distance		More than 20.7 mm (0.815 in.)
Differential oil seal drive in depth	LH side	2.7 ± 0.5 mm (0.106 ± 0.020 in.)
	RH side	0 ± 0.5 mm (0 ± 0.020 in.)
Shift schedule		
D position		
(Throttle valve fully opened)	1 → 2	49 - 55 km/h (30 - 34 mph)
	2 → 3	92 – 102 km/h (57 - 63 mph)
	3 → O/D	148 – 160 km/h (92 - 99 mph)
	O/D → 3	143 – 155 km/h (89 – 96 mph)
	3 → 2	86 – 95 km/h (53 - 59 mph)
	2 → 1	42 - 47 km/h (26 - 29 mph)
(Throttle valve fully closed)	3 → O/D	40 - 45 km/h (25 - 28 mph)
	O/D → 3	26-31 km/h (16 – 19 mph)
2 position		
(Throttle valve fully opened)	1 → 2	49 - 55 km/h (30 - 34 mph)
	3 → 2	89 - 99 km/h (55 - 62 mph)
	2 → 1	42 - 47 km/h (26 - 29 mph)
L position		
(Throttle valve fully opened)	3 → 2	89 – 99 km/h (55 – 62 mph)
	2 → 1	46-51 km/h (29 – 32 mph)
Lock-up point	Throttle valve opening 5 %	
3rd gear	Lock-up ON	57 - 63 km/h (35 - 39 mph)
	Lock-up OFF	55 – 60 km/h (34 – 37 mph)
O/D gear	Lock-up ON	51 – 56 km/h (32 – 35 mph)
	Lock-up OFF	48 - 54 km/h (30 - 34 mph)

SS16U-01

TORQUE SPECIFICATION

Part tightened		N·m	kgf·cm	ft-lbf
Vehicle speed sensor x Transaxle		5.5	56	49 in.·lbf
Direct clutch speed sensor x Transaxle		7.8	80	69 in.·lbf
ATF temperature sensor x Transaxle		10	110	8
Oil pan x Transaxle		7.8	80	69 in.·lbf
Control cable x Control shaft		12	120	9
Control shaft x Park/neutral position switch		13	130	9
Park/neutral position switch x Transaxle	Bolt	5.4	55	48 in.·lbf
	Nut	6.9	70	61 n.·lbf
Shift solenoid valve x Valve body	12 mm (0.47 in.)	6.6	67	58 in.·lbf
	45 mm (1.77 in.)	11	110	8
Valve body x Transaxle		11	110	8
Oil strainer x Valve body		11	110	8
Drain plug x Oil pan		49	500	36
Steering wheel set nut		34	350	25
Front passenger airbag assembly x Instrument panel reinforcement		20	204	15
Floor shift assembly x Body		12	120	9
Hood set bolt		13	130	9
No. 2 cylinder head cover		7.0	71	62 in.·lbf
ECM case set bolt		6.9	70	61 in.·lbf
ECM set bolt		6.9	70	61 in.·lbf
ECM bracket set bolt		18	185	13
ECM bracket set nut		12	120	9
Radiator reservoir set bolt		4.9	50	43 in.·lbf
Ground cable x Transaxle		18	185	13
Starter x Transaxle		37	378	28
Drain plug x Differential		54	550	40
Stabilizer bar link x Shock absorber		44	450	32
Lower suspension arm x Lower ball joint		142	1,450	105
Drive shaft lock nut		216	2,200	159
Steering knuckle x Tie rod end		49	500	33
Drive shaft bearing lock bolt		64	650	47
Power steering gear assembly set bolt		45	459	33
Center member x Body		39	398	29
Center member x Engine front mounting		52	530	38
Suspension member x Body	Front side	113	1,152	83
	Rear side	157	1,601	116
Engine rear mounting insulator x Engine rear mounting bracket		87	890	64
Engine rear mounting insulator x Suspension member		52	530	38
Engine hanger set bolt		38	387	28
Engine left mounting x Engine left mounting bracket		80	816	59
Torque converter dutch x Drive plate		25	250	18
Transaxle housing x Engine block		See page AX–30		
Drive plate x Crankshaft		78	800	58

SUSPENSION AND AXLE

SERVICE DATA

SS04W-06

Cold tire inflation pressure	1ZZ–FE engine models		
	195/60R15 88H P195/60R15 87H	Front, rear	210 kPa (2.1 kgf/cm², 30 psi)
	2ZZ–GE engine models		
	205/55R15 87V P205/55R15 87V 205/50R16 87V	Front, rear	220 kPa (2.2 kgf/cm², 31 psi)
Front Wheel alignment	Vehicle height		
	Tire size: 195/60R15, P195/60R15	Front*1	190 mm (7.48 in.)
		Rear*2	224 mm (8.82 in.)
	Tire size: 205/55R15, P205/55R15	Front*1	190 mm (7.48 in.)
		Rear*2	226 mm (8.90 in.)
	Tire size: 205/50R16	Front*1	193 mm (7.60 in.)
		Rear*2	225 mm (8.86 in.)
	Camber		
		195/60R15, P195/60R15	–0°28' ± 45' (–0.47° ± 0.75°)
		205/55R15, P205/55R15	–0°25' ± 45' (–0.42° ± 0.75°)
		205/50R16	–0°29' ± 45' (–0.48° ± 0.75°)
		Right–left error	45' (0.75°) or less
	Caster		
		195/60R15, P195/60R15	2°07' ± 45' (2.12° ± 0.75°)
		205/55R15, P205/55R15	2°01' ± 45' (2.02° ± 0.75°)
		205/50R16	2°02' ± 45' (2.03° ± 0.75°)
		Right–left error	45' (0.75°) or less
	Steering axis inclination		
		195/60R15, P195/60R15	13°09' ± 45' (13.15° ± 0.75°)
		205/55R15, P205/55R15	13°04' ± 45' (13.07° ± 0.75°)
		205/50R16	13°12' ± 45' (13.20° ± 0.75°)
		Right–left error	45' (0.75°) or less
	Toe–in (total)		0° ± 12' (0* ± 0.2°, 0 ± 2 mm, 0 ± 0.08 in.)
		Rack end length difference	1.5 mm (0.059 in.) or less
	Wheel angle		
	195/60R15, P195/60R15	Inside wheel	38°41' ± 2° (38.68° ±2°)
		Outside wheel: Reference	33°20' (33.33°)
	205/55R15, P205/55R15	Inside wheel	38°46' ± 2° (38.77° ± 2°)
		Outside wheel: Reference	33°25' (33.42°)
	205/50R16	Inside wheel	38°38' ± 2° (38.63° ± 2°)
		Outside wheel: Reference	33°19' (33.32°)
Rear wheel alignment	Camber		–1°11' ± 45' (–1.18° ± 0.75°)
		Right–left error	45' (0.75°) or less
	Toe–in (total)		0°18' ± 12' (0.3° ± 0.2°, 3 ± 2mm, 0.12 ± 0.08 in.)
		Toe–in cross measurement difference	6 mm (0.24 in.) or less
Front axle	Axle bearing backlash	Maximum	0.05 mm (0.0020 in.)
	Axle hub deviation	Maximum	0.07 mm (0.0028 in.)

Front drive shaft	Drive shaft standard length		
	1ZZ–FE (A/T)	RH	851.0 ± 5.0 mm (33.504 ± 0.197 in.)
		LH	565.9 ± 5.0 mm (22.279 ± 0.197 in.)
	1ZZ–FE (M/T) and 2ZZ–GE	RH	845.5 ± 5.0 mm (33.287 ± 0.197 in.)
		LH	563.7 ± 5.0 mm (22.193 ± 0.197 in.)
Front suspension	Lower ball joint turning torque		1.0 - 4.9 N·m (10 - 50 kgf·cm, 8.7 - 43 in.·lbf)
	Stabilizer bar link ball joint turning torque		0.05 – 1.0 N·m (0.5 – 10 kgf·cm, 0.4 - 8.7 in.·lbf)
Rear axle	Axle bearing backlash	Maximum	0.05 mm (0.0020 in.)
	Axle hub deviation	Maximum	0.07 mm (0.0028 in.)
Rear suspension	Stabilizer bar link ball joint turning torque		0.05 – 1.0 N·m (0.5 – 10 kgf-cm, 0.4 - 8.7 in.·lbf)

*1: Front measuring point
Measure the distance from the ground to the center of the front side lower suspension arm mounting bolt.
*2: Rear measuring point
Measure the distance from the ground to the center of the rear side lower suspension arm suspension member side set bolt.

SS04X-05

TORQUE SPECIFICATION

Part tightened	N·m	kgf·cm	ft·lbf
FRONT AXLE			
Hub nut	103	1,050	76
Tie rod end lock nut	74	750	54
Steering knuckle x Shock absorber	153	1,560	113
Steering knuckle x Brake caliper	107	1,090	79
Steering knuckle x Tie rod end	49	500	36
Axle hub x Drive shaft	216	2,200	159
Lower ball joint x Lower suspension arm	142	1,450	105
Lower ball joint x Steering knuckle	103	1,050	76
Steering knuckle x Dust cover	8.3	85	74 in.·lbf
ABS speed sensor set bolt	8.0	82	71 in.·lbf
FRONT DRIVE SHAFT			
Drive shaft center bearing case lock bolt	64	650	47
FRONT SUSPENSION			
Suspension support x Body	39	400	29
Suspension support x Piston rod	47	475	34
Flexible hose x Shock absorber	19	192	14
ABS speed sensor wire harness x Shock absorber	8.0	82	71 in.·lbf
Lower suspension arm set bolt	137	1,397	101
PS gear set bolt	45	459	33
Engine front mount x Center member	52	530	38
Engine rear mount x Suspension member	52	530	38
Suspension member set bolt Front side	113	1,152	83
Rear side	157	1,600	116
Center member front side set bolt	39	400	29
Stabilizer bar bracket x Suspension member	19	194	14
Stabilizer bar link set nut	44	449	32
REAR AXLE			
Hub nut	103	1,050	76
Brake caliper set bolt	47	475	34
Axle hub set bolt	56	571	41
Upper suspension arm x Axle carrier	74	755	55
Lower suspension arm x Axle carrier	74	755	55
REAR SUSPENSION			
Shock absorber x Lower suspension arm	140	1,428	103
ABS speed sensor wire harness x Lower suspension arm	19	194	14
Spring bracket x Body	80	816	59
Shock absorber center nut	56	571	41
Tailpipe set bolt	43	440	32
Parking brake cable set bolt	5.4	55	48 in.·lbf
Upper suspension arm x Suspension member	74	755	55
Lower suspension arm x Suspension member	74	755	55
Lower suspension arm bracket set bolt	115	1,173	85

Lower suspension arm bracket x Lower suspension arm	110	1,122	81
Stabilizer bar bracket set bolt	18	184	13
Stabilizer bar link set nut	44	449	32

BRAKE

SERVICE DATA

SS0LM-02

Brake pedal height from asphalt sheet		139.8 – 149.8 mm (5.504 - 5.898 in.)
Brake pedal freeplay		1 – 6 mm (0.04 – 0.24 in.)
Brake pedal reserve distance at 490 N (50 kgf, 110.2 lbf)		More than 85 mm (3.35 in.)
Brake booster push rod to piston clearance (w/ accessory tool)		0 mm (0 in.)
Front brake pad thickness (1ZZ–FE engine)	STD	11.0 mm (0.433 in.)
Front brake pad thickness (2ZZ–GE engine)	STD	11.5 mm (0.453 in.)
Front brake pad thickness	Minimum	1.0 mm (0.039 in.)
Front brake disc thickness	STD	25.0 mm (0.984 in.)
Front brake disc thickness	Minimum	23.0 mm (0.906 in.)
Front brake disc runout	Maximum	0.05 mm (0.0020 in.)
Rear brake pad thickness	STD	10.0 mm (0.394 in.)
Rear brake pad thickness	Minimum	1.0 mm (0.039 in.)
Rear brake disc thickness	STD	9.0 mm (0.354 in.)
Rear brake disc thickness	Minimum	7.5 mm (0.295 in.)
Rear brake disc runout	Maximum	0.15 mm (0.0059 in.)
Rear brake disc inside diameter	STD	173.0 mm (6.811 in.)
Rear brake disc inside diameter	Maximum	174.0 mm (6.850 in.)
Rear brake drum inside diameter	STD	200.0 mm (7.874 in.)
Rear brake drum inside diameter	Maximum	201.0 mm (7.913 in.)
Drum brake shoe lining thickness	STD	4.0 mm (0.157 in.)
Rear brake drum to shoe clearance		0.6 mm (0.024 in.)
Drum brake shoe lining thickness	Minimum	1.0 mm (0.039 in.)
Parking brake shoe lining thickness	STD	2.0 mm (0.079 in.)
Parking brake shoe lining thickness	Minimum	1.0 mm (0.039 in.)
Parking brake lever travel at 196N (20 Kgf, 44.1 lbf)		5 – 8 clicks
Rear brake clearance between rear shoe and lever		Less than 0.35 mm (0.0138 in.)

SS0LN-02

TORQUE SPECIFICATION

Part tightened	N·m	kgf·cm	ft·lbf
Master cylinder x Brake booster	13	130	9
Brake line union nut	15	155	11
Brake booster clevis lock nut	25	260	19
Brake booster x Pedal bracket	13	130	9
Front disc brake caliper installation bolt	34	350	25
Bleeder plug	8.3	85	74 in.·lbf
Front disc brake torque plate x Steering knuckle	107	1,090	79
Front disc brake caliper x Flexible hose	30	310	22
Rear drum brake wheel cylinder x Backing plate	10	100	7
Rear disc brake caliper installation bolt	47	475	34
ABS actuator assembly x Body	19	195	14
ABS actuator x ABS actuator bracket assembly	5.4	55	48 in.·lbf
Front speed sensor installation bolt	8.0	82	71 in.·lbf
Front speed sensor harness clamp bolt	8.0	82	71 in.·lbf
Rear speed sensor harness clamp bolt Body	8.0	82	71 in.·lbf
Lower arm	19	195	14
Pedal bracket x Reinforcement	24	241	17
Brake pedal x Pedal bracket	37	375	27

STEERING

SERVICE DATA

SS16Y-01

POWER STEERING FLUID		
Fluid level rise	Maximum	5 mm (0.20 in.)
Fluid pressure at idle speed with valve closed	Minimum	7,355 kPa (75 kgf/cm², 1,067 psi)
STEERING WHEEL		
Steering wheel freeplay	Maximum	30 mm (1.18 in.)
Steering effort at idle speed	Reference	6.5 N·m (65 kgf·cm, 58 in.·lbf)
POWER STEERING VANE PUMP		
Vane pump rotating torque		0.27 N·m (2.8 kgf·cm, 2.4 in.·lbf) or less
Vane pump shaft and front housing bushing oil clearance	STD	0.021 - 0.043 mm (0.0008 - 0.0017 in.)
	Maximum	0.07 mm (0.0028 in.)
Vane plate height	Minimum	7.6 mm (0.299 in.)
Vane plate thickness	Minimum	1.405 mm (0.0553 in.)
Vane plate length	Minimum	11.993 mm (0.4722 in.)
Vane plate and vane pump rotor groove clearance	Maximum	0.03 mm (0.0012 in.)
Vane plate length	pump rotor and cam ring mark	
	0	12.001 – 12.003 mm (0.47248 - 0.47256 in.)
	1	11.999-12.001 mm (0.47240 – 0.47248 in.)
	2	11.997 – 11.999 mm (0.47232 - 0.47240 in.)
	3	11.995 – 11.997 mm (0.47224 – 0.47232 in.)
	4	11.993 - 11.995 mm (0.47216 - 0.47224 in.)
Spring free length	Minimum	35.8 mm (1.409 in.)
POWER STEERING GEAR		
Steering rack runout	Maximum	0.1 mm (0.004 in.)
Total preload	Turning	0.9 – 1.3 N·m (9 - 13 kgf·cm, 8.0 - 11.5 in.·lbf)

SS162-01

TORQUE SPECIFICATION

Part tightened	N·m	kgf·cm	ft·lbf
TILT STEERING COLUMN			
Adjusting nut	See page SR–17		
No. 2 tilt lever lock bolt	5.4	55	48 in.·lbf
Tilt steering support x Column tube	15	155	11
No. 2 intermediate shaft assembly x Main shaft assembly	35	360	26
Column assembly set bolt and nut	21	210	15
No. 2 intermediate shaft assembly x Intermediate extension	35	360	26
Steering wheel set nut	34	350	25
Steering wheel pad set screw (Torx screw)	8.8	90	78 in.·lbf
POWER STEERING VANE PUMP			
Front housing x Rear housing	22	220	16
Rear bracket set bolt	44	440	32
Oil pressure switch	21	210	15
Pressure port union	69	700	51
Suction port union set bolt	12	120	9
PS vane pump assembly set nut	37	370	27
Pressure feed tube clamp set bolt	7.8	80	69 in.·lbf
Pressure feed tube x PS vane pump assembly	37 (44)	375 (450)	27 (33)
POWER STEERING GEAR			
Engine hanger set bolt	38	388	28
Bearing guide nut	40	410	30
Rack housing cap	74	750	54
Rack end x Steering rack	62 (83)	630(850)	46 (61)
Tie rod end lock nut	74	750	54
Turn pressure tube x Rack housing	20 (25)	200 (250)	14(18)
Engine rear mount bracket set bott	64	655	47
Engine rear mount bracket x Engine rear mount insulator	87	890	64
Intermediate extension x Control valve shaft	35	360	26
PS gear assembly set bolt	45	460	33
Front suspension member with lower suspension arm x Frame Bolt C	113	1,150	83
Bolt D	157	1,600	116
Bolt E	39	400	29
Engine front mount insulator x Front suspension member	52	530	38
Engine rear mount insulator x Front suspension member	52	530	38
Stabilizer bar link set nut	44	449	32
Lower suspension arm x Lower baH joint	142	1,450	105
Engine hood x Hinge	13	130	9
Tube clamp	7.8	80	69 in.·lbf
Pressure feed and return tubes x PS gear assembly	37 (44)	375 (450)	27 (33)
Tie rod end x Steering knuckle	49	500	36

( ): For use without SST

SUPPLEMENTAL RESTRAINT SYSTEM

TORQUE SPECIFICATION

SS061-25

Part tightened	N·m	kgf·cm	ft·lbf
Steering wheel	34	350	25
Steering wheel pad	8.8	90	78 in.·lbf
Front passenger airbag assembly x Instrument panel reinforcement	20	205	15
Seatback assembly x Seat adjuster	43	440	32
Seat cushion assembly x Seat adjuster	21	210	15
Front seat x Body	37	375	27
Airbag sensor assembly	20	205	15
Front airbag sensor	20	205	15
Side airbag sensor assembly x body	20	205	15
Door side airbag sensor x door	8.0	82	71 in.·lbf

BODY ELECTRICAL

SERVICE DATA

SS080-07

SPEEDOMETER (ON-VEHICLE)	
USA:	
Standard indication (mph)	Allowable range (mph)
20	19-22
40	39-42.5
60	59.5-63.5
80	80-85
100	100 – 105.5
120	120-125.5
CANADA:	
Standard indication (km/h)	Allowable range (km/h)
20	18-23
40	40 – 44
60	60-64.5
80	80 – 85
100	100-105
120	120 – 125.5
140	140-146
160	160-167
TACHOMETER (ON-VEHICLE)/ DC 13.5 V 25 °C at (77 °F)	
Standard indication	Allowable range
700	700-770
1,000	900-1,100
2,000	1,850-2,150
3,000	2,800-3,200
4,000	3,800-4,200
5,000	4,800 – 5,200
6,000	5,800-6,200
7,000	6,800 – 7,200
FUEL SENDER GAUGE	
Float position mm (in.)	Resistance (Ω)
F: Approx. 75.9 (2.99)	Approx. 3.0
1/2: Approx. 17.2 (0.68)	Approx. 31.6
E: Approx. 50.8 (2.00)	Approx. 110.0
ENGINE COOLANT TEMPERATURE SENDER GAUGE (Resistance)	
Temperature °C (°F)	Resistance (Ω)
50 (122.0)	160 – 240
120 (248.0)	17.1 – 21.2

BODY

TORQUE SPECIFICATION

SS160-01

Part tightened	N·m	kgf·cm	ft·lbf
FRONT BUMPER	–	–	–
Front bumper reinforcement x Body	20	200	14
REAR BUMPER	–	–	–
Rear bumper reinforcement x Body	20	200	14
HOOD	–	–	–
Hood hinge x Hood	13	130	9
Hood lock x Body	6.9	70	61 in.·lbf
FRONT DOOR	–	–	–
Door side airbag sensor x Door panel	8.0	82	71 in.·lbf
Outside rear view mirror x Door panel	8.3	85	74 in.·lbf
Upper window stop x Door panel	11	115	8
Door glass x Window regulator	7.8	80	69 in.·lbf
Lower plate x Door panel	4.9	50	43 in.·lbf
Window regulator x Door panel	8.3	85	74 in.·lbf
Door glass female stabilizer x Door panel	4.9	50	43 in.·lbf
Door lock x Door panel Bolt:	4.9	50	43 in.·lbf
Door lock x Door panel Nut:	5.4	55	48 in.·lbf
Door lock x Door panel Screw:	4.9	50	43 in.·lbf
Outside handle x Door panel	5.4	55	48 in.·lbf
Key cylinder x Outside handle	5.4	55	48 in.·lbf
Door hinge x Body	25	260	19
Door hinge x Door panel	25	260	19
Door lock striker x Body	23	230	17
BACK DOOR	–	–	–
Door lock x Door panel	5.4	55	48 in.·lbf
Door handle x Door panel	5.4	55	48 in.·lbf
Door hinge x Door panel	11	115	8
Door hinge x Body	19	196	14
Door lock striker x Body	11	115	8
BACK DOOR STAY	–	–	–
Back door stay x Body	8.3	85	74 in.·lbf
Back door stay x Door panel	26	270	20
FRONT WIPER AND WASHER	–	–	–
Wiper motor x Wiper link assembly	5.4	55	48 in.·lbf
Wiper motor and link assembly x Body	5.4	55	48 in.·lbf
Wiper arm x Wiper motor and link assembly	32	323	23
REAR WIPER AND WASHER	–	–	–
Rear wiper motor x Door panel	5.4	55	48 in.·lbf
Rear wiper arm x Rear wiper motor	5.4	55	48 in.·lbf
ROOF HEADLINING	–	–	–
Drive gear x Sliding roof assembly	5.4	55	48 in.·lbf

SERVICE SPECIFICATIONS - BODY

INSTRUMENT PANEL	–	–	–
Steering wheel set nut	34	350	25
Passenger airbag assembly x Reinforcement	20	204	15
FRONT SEAT	–	–	–
Front seat x Body	37	375	27
Seat cushion assembly x Seat adjuster	21	210	15
Seatback assembly x Seat adjuster	43	440	32
Side airbag assembly x Seatback frame	5.5	56	49 in.·lbf
REAR SEAT	–	–	–
Seatback assembly x Side hinge	18	185	13
Seatback assembly x Center hinge	18	185	13
Side hinge x Body	7.8	80	69 in.·lbf
Center hinge x Body	18	185	13
Seatback lock striker x Body	18	185	13
Seatback lock x Seatback frame	21	210	15
SEAT BELT	–	–	–
Front seat outer belt shoulder anchor x Body	43	440	32
Front seat outer belt floor anchor x Body	43	440	32
Front seat outer belt retractor x Body Upper side:	7.5	76	66 in.·lbf
Front seat outer belt retractor x Body Lower side:	43	440	32
Front seat inner belt x Front seat	43	440	32
Rear seat outer belt retractor x Belt outer anchor bracket	43	440	32
Rear seat outer belt floor anchor x Body	43	440	32
Rear seat inner belt x Body	43	440	32
Belt outer anchor bracket x Body	43	440	32

AIR CONDITIONING

SERVICE DATA

SSGMB-02

Refrigerant charge volume	430 ± 30 g (15.17 ± 1.06 oz.)
Idle-up speed (1ZZ-FE) M/T:	
Magnetic clutch is not engaged	700 ± 50 rpm
Magnetic clutch is engaged	900 ± 50 rpm
Idle-up speed (1ZZ-FE) A/T:	
Magnetic clutch is not engaged	750 ± 50 rpm
Magnetic clutch is engaged	900 ± 50 rpm
Idle-up speed (2ZZ-FE) M/T:	
Magnetic clutch is not engaged	750 ± 50 rpm
Magnetic clutch is engaged	850 ± 50 rpm
Idle-up speed (2ZZ-FE) A/T:	
Magnetic clutch is not engaged	650 ± 50 rpm
Magnetic clutch is engaged	850 ± 50 rpm
Magnetic clutch clearance	0.45 ± 0.10 mm (0.018 ± 0.004 in.)

SS0MC-02

TORQUE SPECIFICATION

Part tightened	N·m	kgf·cm	tt-lbf
Suction hose x Compressor	10	100	7
Discharge hose x Compressor	10	100	7
Discharge hose x Condenser	5.4	55	48 in.·lbf
Compressor x Engine	25	250	18
Liquid tube x Condenser	5.4	55	48 in.·lbf
Evaporator x Expansion valve	5.4	55	48 in.·lbf
Pressure switch x Liquid tube	10	100	7
Pressure plate x Compressor	13.2	135	9
Liquid lines	10	100	7
Discharge lines	10	100	7
Suction lines	10	100	7

DIAGNOSTICS

ENGINE DI–1
HOW TO PROCEED WITH TROUBLESHOOTING DI-1
CUSTOMER PROBLEM ANALYSIS CHECK . . . DI–2
PRE–CHECK DI–3
DIAGNOSTIC TROUBLE CODE CHART DI–14
PARTS LOCATION DM9
TERMINALS OF ECM DI–20
PROBLEM SYMPTOMS TABLE DI–22
CIRCUIT INSPECTION DI–23
AUTOMATIC TRANSAXLE (U240E) DI–155
HOW TO PROCEED WITH TROUBLESHOOTING DM55
CUSTOMER PROBLEM ANALYSIS CHECK . . . DM56
PRE–CHECK DI–157
DIAGNOSTIC TROUBLE CODE CHART DM68
PARTS LOCATION DM69
TERMINALS OF ECM DM70
PROBLEM SYMPTOMS TABLE DI–172
CIRCUIT INSPECTION DM75
AUTOMATIC TRANSAXLE (U341E) DI–218
HOW TO PROCEED WITH TROUBLESHOOTING DI–218
CUSTOMER PROBLEM ANALYSIS CHECK . . . DI–219
PRE–CHECK DI–220
DIAGNOSTIC TROUBLE CODE CHART DI–231
PARTS LOCATION DI–232
TERMINALS OF ECM DI–233
PROBLEM SYMPTOMS TABLE DI–234
CIRCUIT INSPECTION DI–238
ANTI–LOCK BRAKE SYSTEM WITH ELECTRONIC BRAKE FORCE DISTRIBUTION (EBD) DI–274
HOW TO PROCEED WITH TROUBLESHOOTING DI–274
CUSTOMER PROBLEM ANALYSIS CHECK . . . DI–275
PRE–CHECK DI–276
DIAGNOSTIC TROUBLE CODE CHART DI–280
PARTS LOCATION DI–281
TERMINALS OF ECU DI–282
PROBLEM SYMPTOMS TABLE DI–284
CIRCUIT INSPECTION DI–285
SUPPLEMENTAL RESTRAINT SYSTEM . . . DI–324
HOW TO PROCEED WITH TROUBLESHOOTING DI–324
CUSTOMER PROBLEM ANALYSIS CHECK . . . DI–325
PRE–CHECK DI–326
DIAGNOSTIC TROUBLE CODE CHART DI–332
PARTS LOCATION DI–335
TERMINALS OF ECU DI–336
PROBLEM SYMPTOMS TABLE DI–338
CIRCUIT INSPECTION DI–339
CRUISE CONTROL SYSTEM DI–483
HOW TO PROCEED WITH TROUBLESHOOTING DM83
CUSTOMER PROBLEM ANALYSIS CHECK . . . DM84
PRE–CHECK DM85
DIAGNOSTIC TROUBLE CODE CHART DM90
PARTS LOCATION DM91
TERMINALS OF ECU DM92
PROBLEM SYMPTOMS TABLE DM94
CIRCUIT INSPECTION DM96
BODY CONTROL SYSTEM DI–535
HOW TO PROCEED WITH TROUBLESHOOTING DI-535
CUSTOMER PROBLEM ANALYSIS CHECK . . . DI–536
PARTS LOCATION DI–537
TERMINALS OF ECU DI–539
PROBLEM SYMPTOMS TABLE DI–542
CIRCUIT INSPECTION DI–544

D

DI

ENGINE

HOW TO PROCEED WITH TROUBLESHOOTING

DI07D-02

Troubleshoot in accordance with the procedure on the following page.

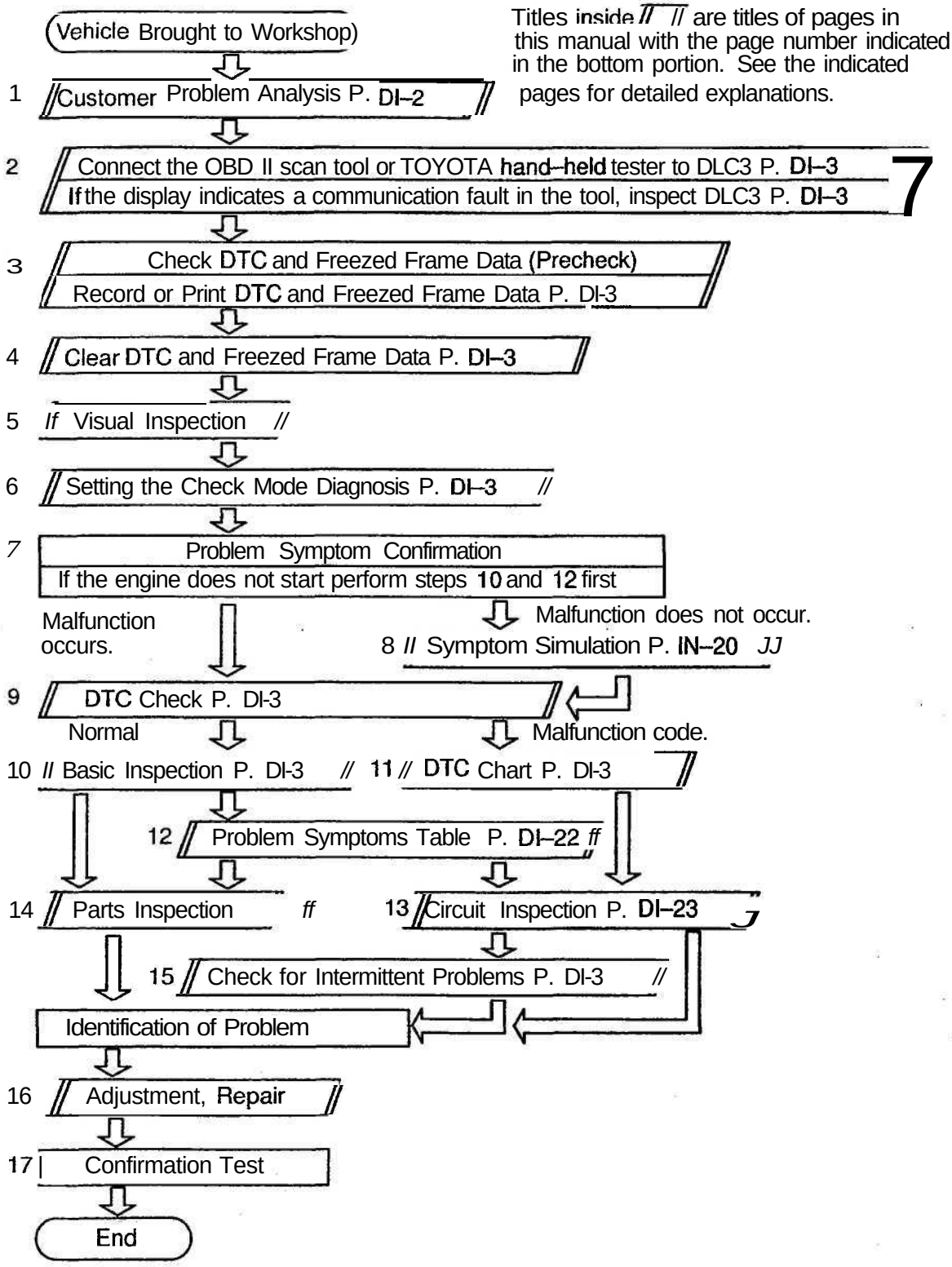

D137R-02

CUSTOMER PROBLEM ANALYSIS CHECK

ENGINE CONTROL SYSTEM Check Sheet

Inspector's Name

Customer's Name		Model and Model Year	
Driver's Name		Frame No.	
Data Vehicle Brought in		Engine Model	
License No.		Odometer Reading	km miles

Problems	D Engine does not Start	D Engine does not crank D No initial combustion D No complete combustion
	D Difficult to Start	O Engine cranks slowly O Other _____
	D Poor Idling	D Incorrect first idle O Idling rpm is abnormal ☐ High (rpm) ☐ Low (rpm) D Rough idling D Other _____
	☐ Poor Driveability	D Hesitation D Back fire D Muffler explosion (after–fire) D Surging D Knocking O Other _____
	D Engine Stall	☐ Soon after starting ☐ After accelerator pedal depressed D After accelerator pedal released D During A/C operation D Shifting from N to D D Other _____
	D Others	

Datas Problem Occurred		
Problem Frequency		☐ Constant ☐ Sometimes (times per day/month) D Once only D Other _____
Condition When Problem Occurs	Weather	☐ Fine D Cloudy D Rainy O Snowy D Various/Other _____
	Outdoor Temperature	a Hot ☐ Warm ☐ Cool D Cold (approx. ____ °F/____ °C)
	Place	☐ Highway D Suburbs ☐ Inner city O Uphill D Downhill D Rough road D Other _____
	Engine Temperature	☐ Cold D Warming up ☐ After warming up ☐ Any temperature ☐ Other _____
	Engine Operation	D Starting D Just after starting (min.) D Idling D Racing ☐ Driving D Constant speed D Acceleration D Deceleration ☐ A/C switch ON/OFF D Other _____

Condition of MIL		O Remains on	D Sometimes light up D Does not light up
DTC Inspection	Normal Mode (Precheck)	D Normal	O Malfunction code(s) (code) D Freezed frame data ( )
	Check Mode	D Normal	D Malfunction code(s) (code) ☐ Freezed frame data ( )

DI37S-03

PRE-CHECK

1. DIAGNOSIS SYSTEM

(a) Description

- When troubleshooting OBD II vehicles, the only difference from the usual troubleshooting procedure is that you connect to the vehicle the OBD II scan tool complying with SAE J1978 or TOYOTA hand–held tester, and read off various data output from the vehicle's ECM.

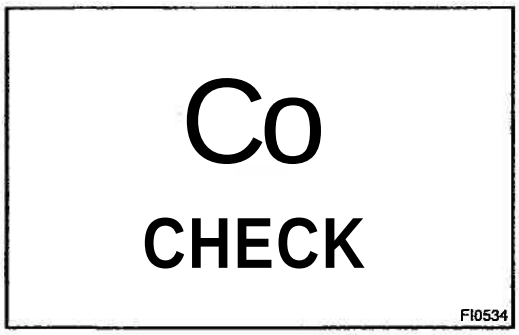

- OBD II regulations require that the vehicle's on–board computer lights up the Malfunction Indicator Lamp (MIL) on the instrument panel when the computer detects a malfunction in the emission control system/components or in the power train control components which affect vehicle emissions, or a malfunction in the computer. In addition to the MIL lighting up when a malfunction is detected, the applicable Diagnostic Trouble Code (DTC) prescribed by SAE J2012 are recorded in the ECM memory (See page DI–14).

DI

If the malfunction does not reoccur in 3 consecutive, the MIL goes off automatically but the DTCs remain recorded in the ECM memory.

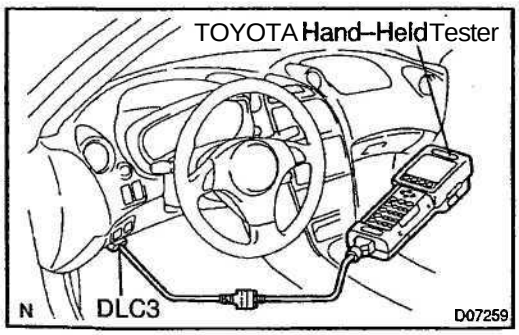

- To check the DTCs, connect the OBD II scan tool or TOYOTA hand–held tester to Data Link Connector 3 (DLC3) on the vehicle. The OBD II scan tool or TOYOTA hand–held tester also enables you to erase the DTCs and check freezed frame data and various forms of engine data (For operating instructions, see the OBD II scan tool's instruction book.). DTCs include SAE controlled codes and manufacturer controlled codes. SAE controlled codes must be set as prescribed by the SAE, while manufacturer controlled codes can be set freely by the manufacturer within the prescribed limits (See DTC chart on page DI-14).

- The diagnosis system operates in normal mode during normal vehicle use. It also has a check mode for technicians to simulate malfunction symptoms and troubleshoot. Most DTCs use 2 trip detection logic* to prevent erroneous detection, and ensure thorough malfunction detection. By switching the ECM to check mode when troubleshooting, the technician can cause the MIL to light up for a malfunction that is only detected once or momentarily (TOYOTA hand–held tester only) (See page DI–3).
- *2 trip detection logic:
  When a malfunction is first detected, the malfunction is temporarily stored in the ECM memory (1st trip).

If the same malfunction is detected again during the second drive test, this second detection causes the MIL to light up (2nd trip). (However, the IG switch must be turned OFF between the 1 st trip and 2nd trip.)

- Freeze frame data:
  Freeze frame data records the engine condition when a misfire (DTC P0300 - P0304) or fuel trim malfunction (DTC P0171, P0172) or other malfunction (first malfunction only), is detected.
  Because freeze frame data records the engine conditions (fuel system, calculated load, engine coolant temperature, fuel trim,engine speed, vehicle speed, etc.) when the malfunction is detected, when troubleshooting it is useful for determining whether the vehicle was running or stopped, the engine warmed up or not, the air–fuel ratio lean or rich, etc. at the time of the malfunction.

Priorities for troubleshooting:
If troubleshooting priorities for multiple DTCs are given in the applicable DTC chart, these should be followed.
If no instructions are given troubleshoot DTCs according to the following priorities.

(1) DTCs other than fuel trim malfunction (DTC P0171, P0172) and misfire (DTC P0300 - P0304).

(2) Fuel trim malfunction (DTC P0171, P0172).
(3) Misfire (DTC P0300 - P0304).

(b) Check the DLC3.
The vehicle's ECM uses ISO 9141-2 for communication. The terminal arrangement of DLC3 complies with SAE J1962 and matches the ISO 9141–2 format.

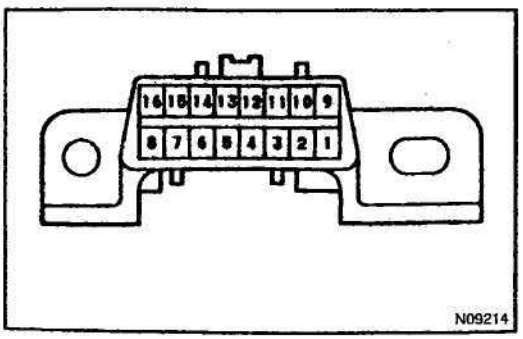

Terminal No.	Connection / Voltage or Resistance	Condition
2	Bus © Line / Pulse generation	During transmission
4	Chassis Ground ↔ Body Ground /1 Ω or less	Always
5	Signal Ground ↔ Body Ground /1 Ω or less	Always
16	Battery Positive ↔ Body Ground /9 - 14 V	Always

HINT:
If your display shows "UNABLE TO CONNECT TO VEHICLE" when you have connected the cable of the OBD II scan tool or TOYOTA hand–held tester to DLC3, turned the ignition switch ON and operated the scan tool, there is a problem on the vehicle side or tool side.

- If communication is normal when the tool is connected to another vehicle, inspect DLC3 on the original vehicle.
- If communication is still not possible when the tool is connected to another vehicle, the problem is probably in the tool itself, so consult the Service Department listed in the tool's instruction manual.

DI

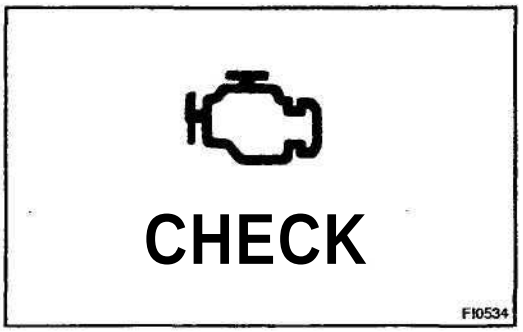

2. **INSPECT DIAGNOSIS (Normal Mode)**

(a) Check the MIL.
(1) The MIL comes on when the ignition switch is turned ON and the engine is not running.

HINT:
If the MIL does not light up, troubleshoot the combination meter (See page BE-2).

(2) When the engine started, the MIL should go off. If the lamp remains on, the diagnosis system has detected a malfunction or abnormality in the system.

(b) Check the DTC.

NOTICE:

- **If there is no DTC in normal mode, check the 1st trip DTC using.**
  Continuous Test Results function (Mode 7 for SAE J1979) on the OBDII scan tool or TOYOTA hand–held tester.
- **TOYOTA hand–held tester only: When the diagnosis system is switched from normal mode to check mode, it erases all DTCs and freezed frame data recorded in normal mode. So before switching modes, always check the DTCs and freezed frame data, and note them down.**
  (1) Prepare the OBD II scan tool (complying with SAE J1978) or TOYOTA hand–held tester.
  (2) Connect the OBD II scan tool or TOYOTA hand–held tester to DLC3 under the instrument panel lower pad.
  (3) Turn the ignition switch ON and turn the OBD II scan tool or TOYOTA hand–held tester switch ON.

(4) Use the OBD II scan tool or TOYOTA hand–held tester to check the DTCs and freezed frame data, note them down (For operating instructions, see the OBD II scan tool's instruction book.).

(5) See page DI–3 to confirm the details of the DTCs.

NOTICE:

When simulating symptoms with an OBD II scan tool (excluding TOYOTA hand–held tester) to check the DTCs, use normal mode. For code on the DTC chart subject to "2 trip detection logic", perform the following either action.

- **Turn the ignition switch OFF after the symptom is simulated the 1st time. Then repeat the simulation process again. When the problem has been simulated twice, the MIL lights up and the DTCs are recorded in the ECM.**
- **Check the 1st trip DTC using Mode 7 (Continuous Test Results) for SAE J1979.**

(c) Clear the DTC.

The DTC and freezed frasme data will be erased by either action.

(1) Operating the OBD II scan tool (complying with SAE J1998) or TOYOTA hand–held tester to erase the codes.

(2) Disconnecting the battery terminals or EFI fuse.

NOTICE:

If the TOYOTA hand–held tester switches the ECM from normal mode to check mode or vise–verse, or if the ignition switch is turned from ON to ACC or OFF during check mode, the DTCs and freezed frame data will be erased.

3. INSPECT DIAGNOSIS (Check Mode)

HINT:

TOYOTA hand–held tester only:

Compared to the normal mode, the check mode has an increased sensitivity to detect malfunctions.

Furthermore, the same diagnostic items which are detected in the normal mode can also be detected in the check mode.

(a) Check the DTC.

(1) Initial conditions

- Battery positive voltage 11V or more.
- Throttle valve fully closed.
- Transmission in "P" or "N" position.
- Air conditioning switched OFF.

(2) Turn ignition switch OFF.

(3) Prepare the TOYOTA hand–held tester.

(4) Connect the TOYOTA hand-held tester to the DLC3 under the instrument panel lower pad.

If there is no DTC in normal mode, check the 1 st trip DTC using Continuous Test Results function (Mode 7 for SAE J1979) on the OBDII scan tool or TOYOTA hand–held tester.

(5) Turn the ignition switch ON and switch the TOYOTA hand-held tester ON.

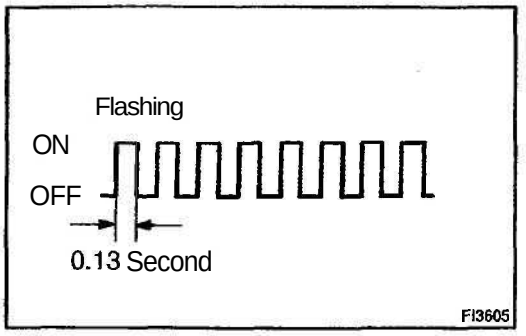

(6) Switch the TOYOTA hand-held tester normal mode to check mode (Check that the MIL flashes.).

NOTICE:

If the TOYOTA hand-held tester switches the ECM from normal mode to check mode or vise-versa, or if the ignition switch is turned from ON to ACC or LOCK during check mode, the DTCs and freezed frame data will be erased.

(7) Start the engine (The MIL goes out after the engine start.).

(8) Simulate the conditions of the malfunction described by the customer.

NOTICE:

Leave the ignition switch ON until you have checked the DTC, etc.

(9) After simulating the malfunction conditions, use the TOYOTA hand-held tester diagnosis selector to check the DTCs and freezed frame data, etc.

HINT:

Take care not to turn the ignition switch OFF. Turning the ignition switch OFF switches the diagnosis system from check mode to normal mode. So all DTCs, etc. are erased.

(10) After checking the DTC, inspect the applicable circuit.

4. FAIL-SAFE CHART

If any of the following codes is recorded, the ECM enters fail-safe mode.

DTC No.	Fail-Safe Operation	Fail-Safe Deactivation Conditions
P0100	Ignition timing fixed at 5° BTDC	Returned to normal condition
P0110	Intake air temperature is fixed at 20°C (68°F)	Returned to normal condition
P0115	Engine coolant temperature is fixed at 80°C (176°F)	Returned to normal condition
P0120	VTA is fixed at 0°	The following condition must be repeated at least 2 times consecutively VTA ≥ 0.1 V and ≤ 0.95 V
P0325	Max. timing retardation	Ignition switch OFF
P0336	Fuel cut	Returned to normal condition
P1300	Fuel cut	IGF signal is detected for 4 consecutive ignitions

5. CHECK FOR INTERMITTENT PROBLEMS

TOYOTA HAND–HELD TESTER only:

By putting the vehicle's ECM in check mode, 1 trip detection logic is possible instead of 2 trip detection logic and sensitivity to detect open circuits is increased. This makes it easier to detect intermittent problems.

(1) Clear the DTC.
(2) Set the check mode.
(3) Perform a simulation test (See page IN–20).
(4) Check the connector and terminal (See page IN–30).
(5) Handle the connector (See page IN-30).

6. BASIC INSPECTION

When the malfunction code is not confirmed in the DTC check, troubleshooting should be performed in the order for all possible circuits to be considered as the causes of the problems. In many cases, by carrying out the basic engine check shown in the following flow chart, the location causing the problem can be found quickly and efficiently. Therefore, use of this check is essential in engine troubleshooting.

DI

1	Is battery positive voltage 11 V or more when engine is stopped?

NO → Charge or replace battery.

YES ↓

2	Is engine cranked?

NO → Proceed to page and continue to **troubleshoot.**

YES ↓

3	Does engine start?

NO → Go to step 7.

YES ↓

4	Check air filter.

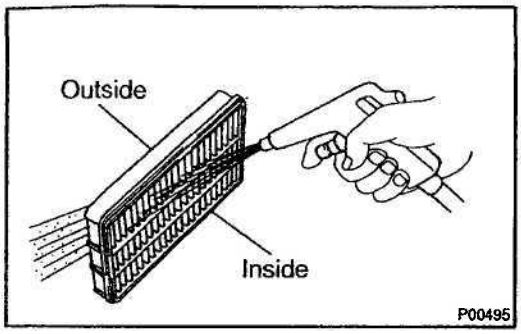

PREPARATION:
Remove the air filter.
CHECK:
Visual check that the air filter is not dirty or excessive oily.
HINT:
If necessary, clean the filter with compressed air. First blow from inside thoroughly, then blow from outside of the filter.

NG → Repair or replace.

OK

5	Check idle speed.

PREPARATION:
(a) Warm up the engine to normal operating temperature.
(b) Switch off all accessories.
(c) Switch off air conditioning.
(d) Shift transmission into "N" position.
(e) Connect the OBD II scan tool or TOYOTA hand–held tester to DLC3 on the vehicle.

CHECK:
Use CURRENT DATA to check the idle speed.
OK:

Idle speed:
1ZZ–FE: 650 – 750 rpm
2ZZ–GE (M/T): 750 - 850 rpm
2ZZ–GE (A/T): 700 – 800 rpm

NG → Proceed to problem symptoms table on page DI–22.

OK

DI

6	Check ignition timing.

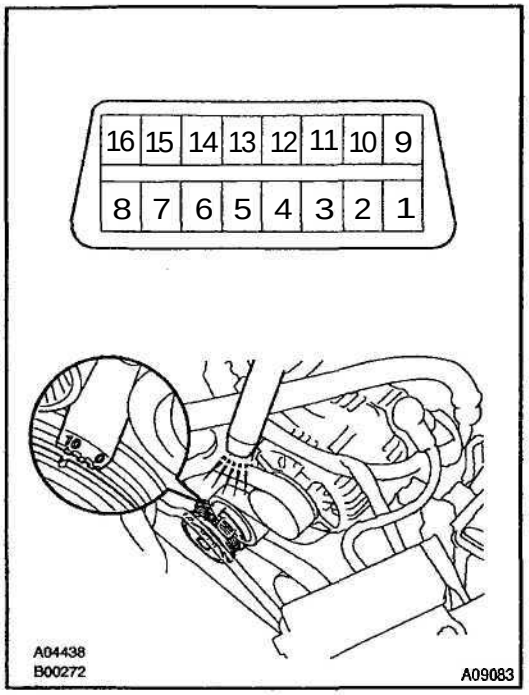

PREPARATION:

(a) Warm up the engine to normal operating temperature.
(b) Shift transmission into "N" position.
(c) Keep the engine speed at idle.
(d) Using SST, connect terminals 13 (TC) and 4 (CG) of the DLC3.
SST 09843 – 18020
(e) Connect the timing light.

CHECK:

Check ignition timing.

OK:

Ignition timing:
1ZZ–FE: 10 – 18° BTDC at idle
2ZZ–GE: 8 – 12° BTDC at idle

NG → **Proceed to page and continue to troubleshoot.**

OK →

Proceed to problem symptoms table on page DI–22.

7	Check fuel pressure.

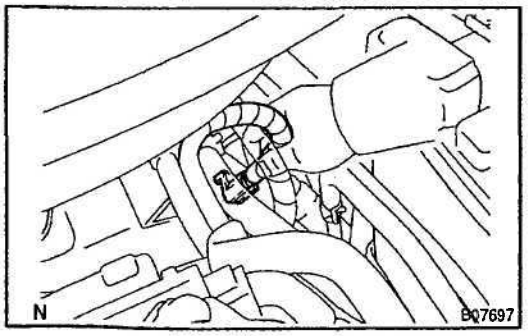

PREPARATION:

(a) Be sure that enough fuel is in the tank.
(b) Connect the TOYOTA hand–held tester to the DLC3.
(c) Turn the ignition switch ON and push TOYOTA hand–held tester main switch ON.
(d) Use ACTIVE TEST mode to operate the fuel pump.
(e) Please refer to the TOYOTA hand–held tester operator's manual for further details.
(f) If you have no TOYOTA hand–held tester, connect the positive (+) and negative (-) leads from the battery to the fuel pump connector (See page SF–6).

CHECK:

Check for fuel pressure in the fuel inlet hose when it is pinched off.

HINT:

At this time, you will hear a fuel flowing noise.

NG → **Proceed to page SF–6 and continue to trouble-shoot.**

OK

8	Check for spark.

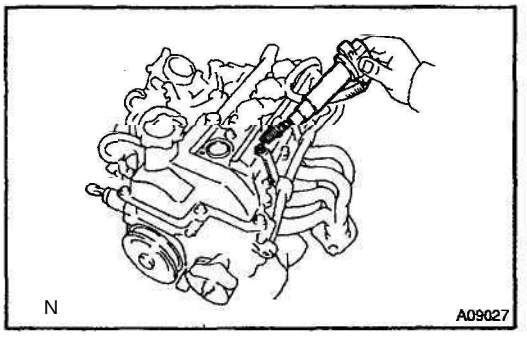

PREPARATION:
(a) Disconnect the high–tension cord from the spark plug.
(b) Remove the spark plug.
(c) Install the spark plug the high–tension cord.
(d) Disconnect the injector connector.
(e) Ground the spark plug.

CHECK:
Check if spark occurs while engine is being cranked.

NOTICE:
To prevent excess fuel being injected from the injectors during this test, don't crank the engine for more than 5 – 10 seconds at a time.

NG → **Proceed to page IG–1 and continue to trouble-shoot.**

OK

Proceed to problem symptoms table on page DI–22.

7. ENGINE OPERATING CONDITION

NOTICE:

The values given below for "Normal Condition" are representative values, so a vehicle may still be normal even if its value varies from those listed here. So do not decide whether a part is faulty or not solely according to the "Normal Condition" here.

(a) CARB mandated signals.

TOYOTA hand-held tester display	Measurement Item	Normal Condition*
FUEL SYS #1	Fuel System Bank 1 OPEN: Air-fuel ratio feedback stopped CLOSED: Air-fuel ratio feedback operating	Idling after warming up: CLOSED
CALC LOAD	Calculator Load: Current intake air volume as a proportion of max. intake air volume	Idling: 1ZZ-FE: 11.3 - 16.0 % 2ZZ-GE: 9.1 - 20.0 % Racing without toad (2,500rpm): 1ZZ-FE: 12.3 - 17.9 % 2ZZ-GE: 11.0-23.0%
COOLANT TEMP.	Engine Coolant Temp. Sensor Value	After warming up: 80 - 95°C (176 - 203°F)
SHORT FT #1	Short-term Fuel Trim Bank 1	0 ± 20%
LONG FT #1	Long-term Fuel Trim Bank 1	0 ± 20%
ENGINE SPD	Engine Speed	Idling: 1ZZ-FE: 650 - 750 rpm 2ZZ-GE (MT): 750 - 850 rpm 2ZZ-GE (AT): 700 - 800 rpm
VEHICLE SPD	Vehicle Speed	Vehicle Stopped: 0 km/h (0 mph)
IGN ADVANCE	Ignition Advance: Ignition Timing of Cylinder No. 1	Idling: BTDC 10 - 18°
INTAKE AIR	Intake Air Temp. Sensor Value	Equivalent to Ambient Temp.
MAF/AFM	Air Flow Rate Through Mass Air Flow Meter	Idling: 1 ZZ-FE: 1 .4 - 2.0 gm/sec. 2ZZ-GE: 1 .5 - 5.0 gm/sec. Racing without load (2,500 rpm): 1ZZ-FE: 5.4 - 7.9 gm/sec. 2ZZ-GE: 5.0 - 15.0 gm/sec.
THROTTLE POS	Voltage Output of Throttle Position Sensor Calculated as a percentage: 0 V → 0%, 5 V → 100%	Throttle Fully Closed: 6 - 16 % Throttle Fully Open: 64 - 98 %
O2S B1, S1	Voltage Output of Heated Oxygen Sensor Bank 1, Sensor 1	Idling: 0.1 - 0.9 V
O2FT B1, S1	Heated Oxygen Sensor Fuel Trim Bank 1, Sensor 1 (Same as SHORT FT #1)	0 ± 20 %
O2S B1, S2	Voltage Output of Heated Oxygen Sensor Bank 1, Sensor 2	Driving at 50 km/h (31 mph): 0.1 - 0.9 V

*: If no conditions are specifically stated for "Idling", it means the shift lever is at N or P position, the A/C switch is OFF and all accessory switches are OFF.

(b) TOYOTA Enhanced Signals.

TOYOTA hand-held tester display	Measurement Item	Normal Condition*
MISFIRE RPM	Engine RPM for first misfire range	Misfire 0: 0 rpm
MISFIRE LOAD	Engine load for first misfire range	Misfire 0: 9 g/r

INJECTOR	Fuel injection time for cylinder No.1	Idling: 1ZZ-FE: 1.1 -2.1 ms 2ZZ-GE: 0.8 - 2.0 ms
IAC DUTY RATIO	Intake Air Control Valve Duty Ratio Opening ratio rotary solenoid type IAC valve	Idling: 1ZZ-FE: 25 – 35 % 2ZZ-GE: 22 - 35 %
STARTER SIG	Starter Signal	Cranking: ON
CTP SW	Closed Throttle Position Signal	Throttle fully closed: ON
A/C SIG	A/C Switch Signal	A/C ON: ON
PNP SIG	Park/Neutral Position Switch Signal	P or N position: ON
ELECTCL LOAD SIG	Electrical Load Signal	Defogger S/W ON: ON
STOP LIGHT SW	Stop Light Switch Signal	Stop light switch ON: ON
PS OIL PRESS SW	Power Steering Oil Pressure Switch Signal	Turn steering wheel: ON
FC IDL	Fuel Cut Idle: Fuel cut when throttle valve fully closed, during deceleration	Fuel cut operating: ON
FC TAU	Fuel Cut TAU: Fuel cut during very light toad	Fuel cut operating: ON
CYL#1, CYL#2, CYL#3, CYL#4	Abnormal revolution variation for each cylinder	0%
IGNITION	Total number of ignition for every 1,000 revolutions	0 - 2,000 rpm
FUEL PUMP	Fuel Pump Signal	Idling: ON
A/C MAG CLUTCH	A/C switch signal	A/C ON: ON
EVAP (PURGE) VSV	EVAP VSV signal	VSV operating: ON
VVT CTRL	VVT control signal	VVT operating: ON
INTAKE CTRL VSV	Intake control VSV signal	VSV operating: ON
TOTAL FT B1	Total Fuel Trim Bank 1 : Average value For fuel trim system of bank 1	Idling: 0.8 – 1.2 V
O2 LR B1, S1	Heated Oxygen Sensor Lean Rich Bank 1, Sensor 1 Response time for oxygen sensor output to switch from lean to rich	Idling after wanning up: 0 – 1,000 msec.
O2 RL B1, S1	Heated Oxygen Sensor Rich Lean Bank 1, Sensor 1 Response time for oxygen sensor output to switch from rich to lean	Idling after warming up: 0 – 1,000 msec.

*: If no conditions are specifically stated for "Idling", it means the shift lever is at N or P position, the A/C switch is OFF and all accessory switches are OFF.

DIAGNOSTIC TROUBLE CODE CHART

HINT:

Parameters listed in the chart may not be exactly the same as your reading due to the type of instrument or other factors.

If a malfunction code is displayed during the DTC check in check mode, check the circuit for that code listed in the table below. For details of each code, turn to the page referred to under the "See page " for the respective "DTC No." in the DTC chart.

SAE CONTROLLED:

DTC No.	Detection Item	Trouble Area	MIL*1	Memory
P0100 (DI–23)	Mass Air Flow Circuit Malfunction	•Open or short in mass air flow meter circuit • Mass air flow meter •ECM	O	O
P0101 (DI–27)	Mass Air Flow Circuit Range/ Performance Problem	• Mass air flow meter	O	O
P0110 (DI–28)	Intake Air Temp. Circuit Malfunction	• Open or short in intake air temp. sensor circuit • Intake air temp. sensor (built into mass air flow meter) •ECM	O	O
P0115 (DI–33)	Engine Coolant Temp. Circuit Malfunction	• Open or short in engine coolant temp. sensor circuit • Engine coolant temp. sensor •ECM	O	O
P0116 (DI–37)	Engine Coolant Temp. Circuit Range/Performance Problem	•Cooling system • Engine coolant temp. sensor	O	O
P0120 (DI–38)	Throttle/Pedal Position Sensor/ Switch "A" Circuit Malfunction	• Open or short in throttle position sensor circuit •Throttle position sensor •ECM	O	O
P0121 (DI–43)	Throttle/Pedal Position Sensor/ Switch "A" Circuit Range/Performance Problem	• Throttle position sensor •ECM	O	O
P0125 (DM4)	Insufficient Coolant Temp. for Closed Loop Fuel Control	• Open or short in heated oxygen sensor (bank 1 sensor 1) circuit • Heated oxygen sensor (bank 1 sensor 1) • Air induction system • Fuel pressure • Injector • Gas leakage on exhaust system •ECM	O	O
P0130 (DM9)	Heated Oxygen Sensor Circuit Malfunction (Bank 1 Sensor 1) (Except Calif.)	• Open or short in heated oxygen sensor circuit • Heated oxygen sensor • Air induction system • EGR system • Fuel pressure • Injector •ECM	O	O
P0133 (DI–53)	Oxygen Sensor Circuit Slow Response (Bank 1 Sensor 1)	• Open or short in heated oxygen sensor circuit • Heated oxygen sensor • Air induction system • EGR system • Fuel pressure • Injector •ECM	O	O
P0135 (DI–56)	Oxygen Sensor Heater Circuit Malfunction (Bank 1 Sensor 1)	• Open or short in heater circuit of heated oxygen sensor • Heated oxygen sensor heater •ECM	O	O

P0136 (DI–58)	Oxygen Sensor Circuit Malfunction (Bank 1 Sensor 2)	• Open or short in heated oxygen sensor circuit • Heated oxygen sensor	O	O
P0141 (DI–56)	Oxygen Sensor Heater Circuit Malfunction (Bank 1 Sensor 2)	• Same as DTC No. P0135	O	O
P0171 (DI–60)	System too Lean (Fuel Trim)	• Air induction system • Injector blockage • Mass air flow meter • Engine coolant temp. sensor • Fuel pressure • Gas leakage on exhaust system • Open or short in heated oxygen sensor (bank 1 sensor 1) circuit • Heated oxygen sensor (bank 1 sensor 1)	O	O
P0172 (DI–60)	System too Rich (Fuel Trim)	• Injector teak, blockage • Mass air flow meter • Engine coolant temp. sensor • Ignition system • Fuel pressure • Gas leakage on exhaust system • Open or short in heated oxygen sensor (bank 1 sensor 1) circuit • Heated oxygen sensor (bank 1 sensor 1)	O	O
P0300 (DI–64)	Random/Multiple Cylinder Misfire Detected	• Open or short in engine wire • Connector connection • Vacuum hose connection • Ignition system • Injector • Fuel pressure • EGR system • Manifold absolute pressure sensor • Engine coolant temp. sensor • Compression pressure • Valve clearance • Valve timing • ECM	O	O
P0301 (DI–64)	Cylinder 1 Misfire Detected			
P0302 (DI–64)	Cylinder 2 Misfire Detected			
P0303 (DI–64)	Cylinder 3 Misfire Detected			
P0304 (DI–64)	Cylinder 4 Misfire Detected			
P0325 (DI–71)	Knock Sensor 1 Circuit Malfunction (Bank 1)	• Open or short in knock sensor 1 circuit • Knock sensor 1 (looseness) • ECM	O	O
P0335 (DI–74)	Crankshaft Position Sensor "A" Circuit Malfunction	• Open or short in crankshaft position sensor circuit • Crankshaft position sensor • Signal plate (Timing belt guide) • Crankshaft timing pulley • ECM	O	O
P0340 (DI–76)	Camshaft Position Sensor Circuit Malfunction	• Open or short in camshaft position sensor circuit • Camshaft position sensor • Camkshaft timing pulley • ECM	O	O
P0420 (DI–78)	Catalyst System Efficiency Below Threshold (Bank 1)	• Gas leakage on exhaust system • Open or short in heated oxygen sensor circuit • Heated oxygen sensor • Three–way catalytic converter	O	O

P0440 (DI-81)	Evaporative Emission Control System Malfunction	• Hose or tube cracked, hole, damaged or loose seal • Fuel tank cap incorrectly installed • Fuel tank cap cracked or damaged • Vacuum hose cracked, hole, blocked, damaged or disconnected • Fuel tank cracked, hole or damaged • Charcoal canister cracked, hole or damaged • Open or short in vapor pressure sensor circuit • Vapor pressure sensor • Fuel tank over fill check valve cracked or damaged • ECM	O	O
P0441 (DI-87)	Evaporative Emission Control System Incorrect Purge Flow	• Vacuum hose cracked, hole, blocked damaged or disconnected • Open or short in vapor pressure sensor circuit • Vapor pressure sensor • Open or short in VSV circuit for EVAP • VSV for EVAP • Open or short in VSV circuit for vapor pressure sensor • VSV for vapor pressure sensor • Charcoal canister cracked, hole or damaged • Fuel tank over fill check valve cracked or damaged • ECM	O	O
P0446 (DI-87)	Evaporative Emission Control System Vent Control Malfunction			
P0450 (DI-104)	Evaporative Emission Control System Pressure Sensor Malfunction	• Open or short in vapor pressure sensor circuit • Vapor pressure sensor • ECM	O	O
P0451 (DI-104)	Evaporative Emission Control System Pressure Sensor Range/ Performance			
P0500 (DM06)	Vehicle Speed Sensor Malfunction	• Combination meter • Open or short in vehicle speed sensor circuit • Vehicle speed sensor • ECM	O	O
P0505 (DI-109)	Idle Control System Malfunction	• Open or short in IAC valve circuit • IAC valve is stuck or closed • Open or short in A/C switch circuit • Air induction system • ECM	O	O

*1: O • • • MIL lights up

MANUFACTURER CONTROLLED:

DTC No. (See Page)	Detection Item	Trouble Area	MIL*1	Memory
P1300 (DI–114)	Igniter Circuit Malfunction (No. 1)	• Ignition system •Open or short in IGF1 and IGT1 circuit from No.1 ignition coil with igniter to ECM • No.1 ignition coil with igniter •ECM	O	O
P1305 (DM14)	Igniter Circuit Malfunction (No.2)	• Ignition system • Open or short in IGF2 and IGT2 circuit from No.2 ignition coil with igniter to ECM • No.2 ignition coil with igniter •ECM	O	O
P1310 (DI-114)	Igniter Circuit Malfunction (No.3)	• Ignition system •Open or short in IGF2 and IGT3 circuit from No.3 ignition coil with igniter to ECM • No.3 ignition coil with igniter • ECM	O	O
P1315 (DI-114)	Igniter Circuit Malfunction (No.4)	• Ignition system • Open or short in IGF1 and IGT4 circuit from No.4 ignition coil with igniter to ECM • No.4 ignition coil with igniter •ECM	O	O
P1335 (DI–120)	Crankshaft Position Sensor Circuit Malfunction (During engine running)	• Open or short in crankshaft position sensor circuit • Crankshaft position sensor • Signal plate •ECM	O	O
P1346 (DM 21)	VVT Sensor/Camshaft Position Sensor Circuit Range/Performance Problem (Bank 1)	• Mechanical system (Jumping teeth of timing belt, belt stretched) •ECM	O	O
P1349 (DM23)	WT System Malfunction (Bank 1)	• Valve timing • OCV • WT controller assembly •ECM	O	O
P1520 (DM 30)	Stop Light Switch Signal Malfunction	• Short in stop light switch signal circuit • Stop light switch •ECM	O	O
P1600 (DM33)	ECM BATT Malfunction	• Open in back up power source circuit •ECM	O	O
P1645 (DM35)	Body ECU Malfunction	• Body ECU • A/C ECU • Communication bus	O	O
P1656 (DM36)	OCV Circuit Malfunction (for VVT–i)	• Open or short in OCV circuit • OCV for VVT–i •ECM	O	O
P1690*2 (DM39)	OCV Circuit Malfunction (for VVT–L)	• Open or short in OCV circuit • OCV for VVT–L • ECM	O	O
P1692*2 (DM43)	OCV Open Malfunction (for VVT–L)	• Open or short in OCV circuit • OCV for VVT–L •ECM	O	O

P1693*2 (DM43)	OCV Close Malfunction (for VVT-L)	• Open or short in OCV circuit • OCV for WT-L • ECM	O	O
P1780*3 (DI-145)	Park/Neutral Position Switch Malfunction	• Short in park/neutral position switch circuit • Park/neutral position switch • ECM	O	O

*1: O ··· MIL lights up
*2: 2ZZ-GE only
*3: A/T only

D197U-02

PARTS LOCATION

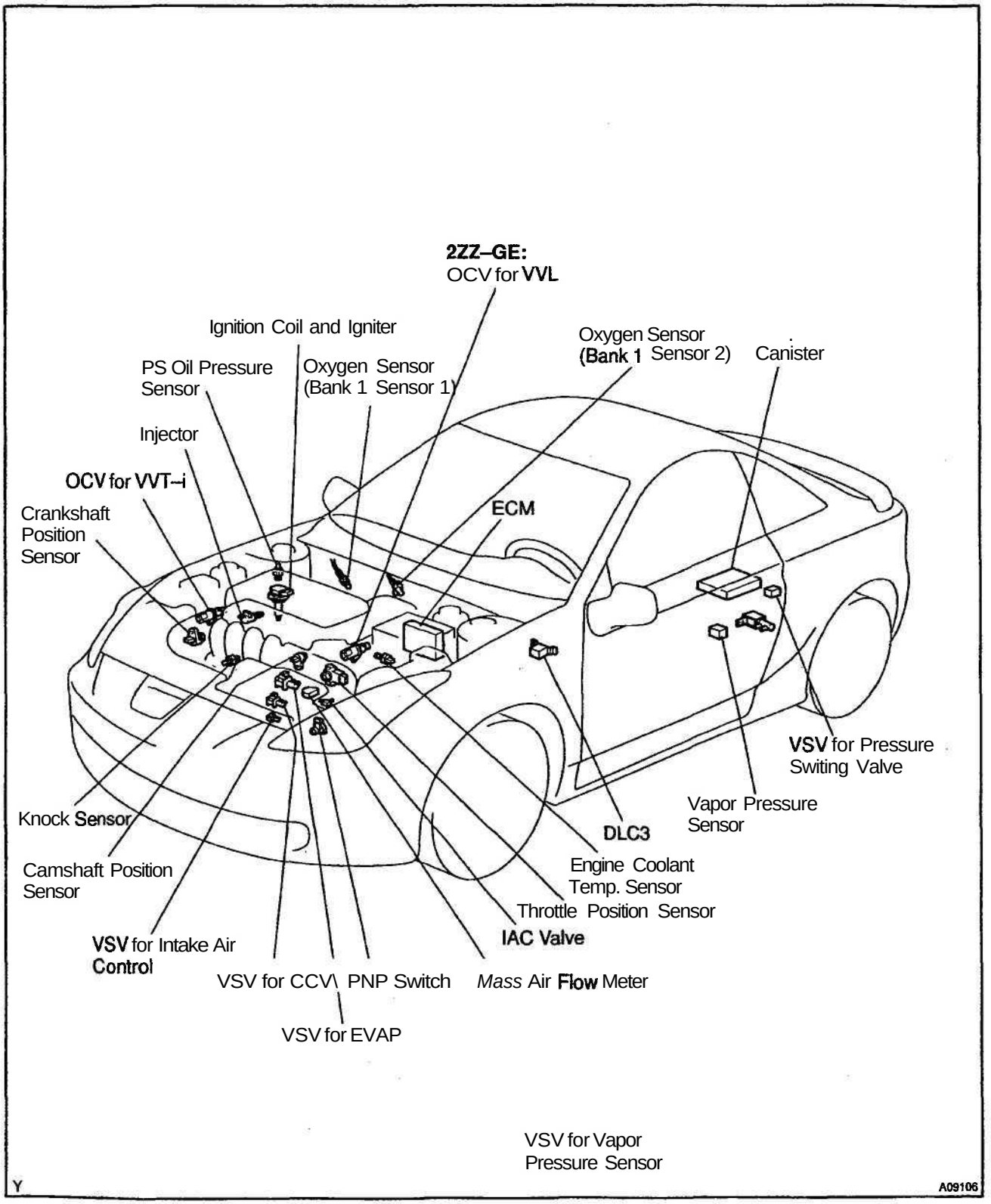

D37V-04

TERMINALS OF ECM

ECM Terminals

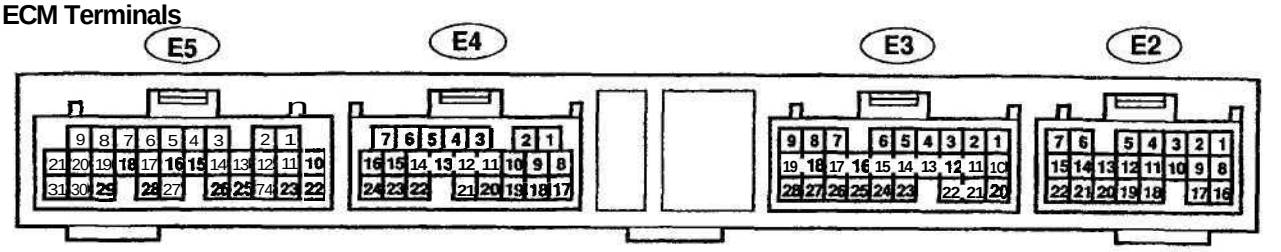

F02094

Symbols (Terminals No.)	Wiring Color	Condition	STD Voltage (V)
BATT (E2 – 1) – E1 (E4-17)	W ↔ BR	Always	9-14
FC (E2 – 3) – E1 (E4 – 17)	G–R ↔ BR	IG switch ON	9-14
		Idling	0 – 0.3
PTNK (E2 – 4) – E1 (E4-17)	L–B ↔ BR	IG switch ON, fuel cap taken off	2.9-3.7
IGSW (E2 - 8) - E1 (E4 – 17)	B–O ↔ BR	IG switch ON	9-14
W (E2 – 15) – E1 (E4 – 17)	R–B ↔ BR	Idling	9-14
		IG switch ON	Below 3.0
+B(E2-16)-E1 (E4-17)	B–R ↔ BR	IG switch ON	9-14
STP(E3-6)-E1 (E4 – 17)	G–W ↔ BR	IG switch ON, brake pedal depressed	7.5 – 14
		IG switch ON, brake pedal depressed	Below 1.5
F/PS (E3 – 8) – E1 (E4 – 17)	P ↔ BR	IG switch ON	Below 1.5
VSV (E3 – 9) – E1 (E4 – 17)	R–L ↔ BR	IG switch ON	9-14
STA(E3-11)-E1 (E4-17)	L ↔ BR	Cranking	6.0 or more
HT1B (E3 – 16) - E03 (E2 - 7)	Y–G ↔ W–B	Idling	Below 3.0
		IG switch ON	9-14
MREL (E3 – 21) – E1 (E4 – 17)	L–B ↔ BR	IG switch ON	9-14
SPD (E3 – 22) – E1 (E4 – 17)	W-R ↔ BR	IG switch ON, rotate driving wheel slowly	Pulse generation
OX1B (E3 - 25) - E2 (E4 – 18)	W ↔ BR	Maintain engine speed at 2,500 rpm for 2 min. after warming up	Pulse generation (See page DI–78)
TACH (E3 – 27) – E1 (E4 – 17)	BR–W ↔ BR	Idling	Pulse generation
VC(E4-2)-E2(E4-18)	R ↔ BR	IG switch ON	9-14
HT1A (E4 – 3) – E03 (E2 – 7)	Y–R ↔ BR	Idling	Below 3.0
		IG switch ON	9-14
EVP1 (E4 – 4) – E01 (E5 – 21)	G–O ↔ W–B	IG switch ON	9-14
OVL+ (E4 - 7) - OVL- (E4 - 6)	L-W ↔ L–B	Engine speed at 6,000 rpm or more	9-14
VG (E4 – 11) – EVG (E4 – 1)	G–W ↔ Y–G	Idling, A/C switch OFF	1.1-1.5
OX1A (E4 – 12) – E2 (E4 – 18)	B ↔ BR	Maintain engine speed at 2,500 rpm for 2 min. after warming up	Pulse generation (See page DI–78)
THW (E4 – 14) – E2 (E4 – 18)	G ↔ BR	Idling, Engine coolant temp. at 80 °C (176 °F)	0.2 – 1.0
NE+ (E4 – 16) - NE- (E4 - 24)	O ↔ W	Idling	Pulse generation (See page DI–74)
OSW (E4 – 21) – E1 (E4 – 17)	GR ↔ BR	Idling	9-14
THA (E4 - 22) - E2 (E4 – 18)	L–R ↔ BR	Idling, intake air temp. 20 °C (68 °F)	0.5-3.4

Symbols (Terminals No.)	Wiring Color	Condition	STD Voltage (V)
VTA(E4-23)—E2(E4-18)	B-W ↔ BR	IG switch ON, throttle valve fully closed	0.3 – 1.0
		IG switch ON, throttle valve fully open	3.2-4.9
#10(E5-1)-E01 (E5-21)	R ↔ W-B	IG switch ON	9-14
		Idling	Pulse generation (See page DI-64)
#20 (E5 – 2) – E01 (E5-21)	R-L ↔ W-B	IG switch ON	9-14
		Idling	Pulse generation (See page DI-64)
#30 (E5-3)-E01 (E5-21)	R-W ↔ W-B	IG switch ON	9-14
		Idling	Pulse generation (See page DI-64)
#40 (E5 – 4) – E01 (E5 – 21)	R-B ↔ W-B	IG switch ON	9-14
		Idling	Pulse generation (See page DI-64)
IGT1 (E5 – 10) – E1 (E4 – 17)	R-B ↔ BR	Idling	Pulse generation (See page DI-114)
IGT2(E5-11)-E1 (E4 – 17)	R-W ↔ BR	Idling	Pulse generation (See page DM 14)
IGT3 (E5 – 12) – E1 (E4 – 17)	G-R ↔ BR	Idling	Pulse generation (See page DM 14)
IGT4 (E5 – 13) – E1 (E4 – 17)	R-Y ↔ BR	Idling	Pulse generation (See page DI-114)
CCV (E5 – 17) – E1 (E4 – 17)	V-W ↔ BR	IG switch ON	9-14
RSO (E5 –18)-E01 (E5-21)	B-W ↔ W-B	IG switch ON, disconnect E4 of E4 connector	9-14
MOPS (E5 - 22) - E1 (E5 - 17)	Y-B ↔ BR	Idling	9-14
OCV+ (E5 - 24) - OCV- (E5 - 23)	G-O ↔ W	IG switch ON	Pulse generation (See page DM 23)
IGF (E5 – 25) – E1 (E4 – 17)	B-Y ↔ BR	IG switch ON	4.5-5.5
		Idling	Pulse generation (See page DM 14)
KNK1 (E5-27)-E1 (E4-17)	W ↔ BR	Idling	Pulse generation (See page DI-71)
PS (E5 – 28) – E1 (E4 – 17)	P ↔ BR	IG switch ON	9-14

*1: Only for A/T models.
*2: Only for 2ZZ-GE models.

D37W-03

PROBLEM SYMPTOMS TABLE

Symptom	Suspect Area	See page
Engine does not crank (Does not start)	1. Starter 2. starter relay	ST–2 ST–17
No initial combustion (Does not start)	1. ECM power source circuit 2. Fuel pump control circuit 3. Engine control module (ECM)	DM46 DI–149 IN–30
No complete combustion (Does not start)	1. Fuel pump control circuit	DM49
Engine cranks normally (Difficult to start)	1. Starter signal circuit 2. Fuel pump control circuit 3. Compression	– DM49 EM–3
Cold engine (Difficult to start)	1. Starter signal circuit 2. Fuel pump control circuit	– DM49
Hot engine (Difficult to start)	1. Starter signal circuit 2. Fuel pump control circuit	– DM49
High engine idle speed (Poor idling)	1. A/C switch circuit 2. ECM power source circuit	AC–68 DM46
Low engine idle speed (Poor idling)	1. A/C switch circuit 2. Fuel pump control circuit	AC–68 DM49
Rough idling (Poor idling)	1. Compression 2. Fuel pump control circuit	EM–3 DM49
Hunting (Poor idling)	1. ECM power source circuit 2. Fuel pump control circuit	DM46 DM49
Hesitation/Poor acceleration (Poor driveability)	1. Fuel pump control circuit 2. A/T faulty U240E A/T faulty U341E	DM49 DM72 DI–234
Surging (Poor driveability)	1. Fuel pump control circuit	DM49
Soon after starting (Engine stall)	1. Fuel pump control circuit	DM49
During A/C operation (Engine stall)	1. A/C switch circuit 2. Engine control module (ECM)	AC–68 IN–30

CIRCUIT INSPECTION

DTC	P0100	Mass Air Flow Circuit Malfunction

CIRCUIT DESCRIPTION

The mass air flow meter uses a platinum hot wire. The hot wire air flow meter consists of a platinum hot wire, thermistor and a control circuit installed in a plastic housing. The hot wire air flow meter works on the principle that the hot wire and thermistor located in the intake air bypass of the housing detect any changes in the intake air temp.

The hot wire is maintained at the set temp. by controlling the current flow through the hot wire. This current flow is then measured as the output voltage of the air flow meter.

The circuit is constructed so that the platinum hot wire and thermistor provide a bridge circuit, with the power transistor controlled so that the potential of A and B remains equal to maintain the set temp.

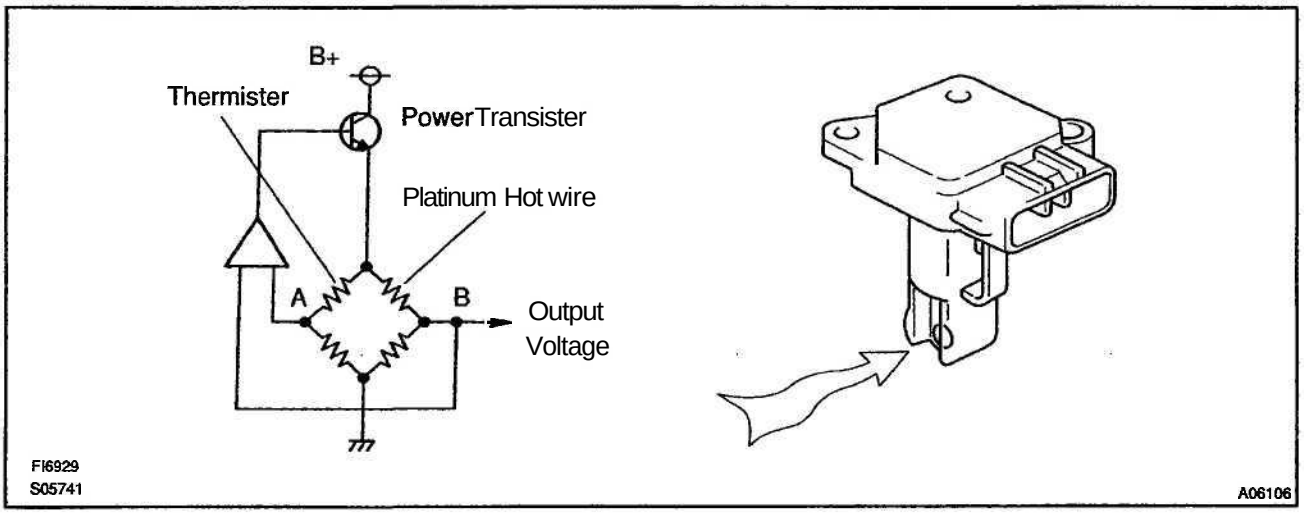

DTC No.	DTC Detecting Condition	Trouble Area
P0100	Open or short in mass air flow meter circuit with more than 3 sec. engine speed 4,000 rpm or less	• Open or short in mass air flow meter circuit • Mass air flow meter • ECM

If the ECM detects DTC "P0100" it operates the fail–safe function, keeping the ignition timing and injection volume constant and making it possible to drive the vehicle.

HINT:

After confirming DTC P0100 use the OBD II scan tool or TOYOTA hand–held tester to confirm the mass air flow ratio from "CURRENT DATA".

Mass Air Flow Value (gm/sec.)	Malfunction
0.0	• Mass air flow meter power source circuit open • VG circuit open or short
271.0 or more	• E2G circuit open

WIRING DIAGRAM

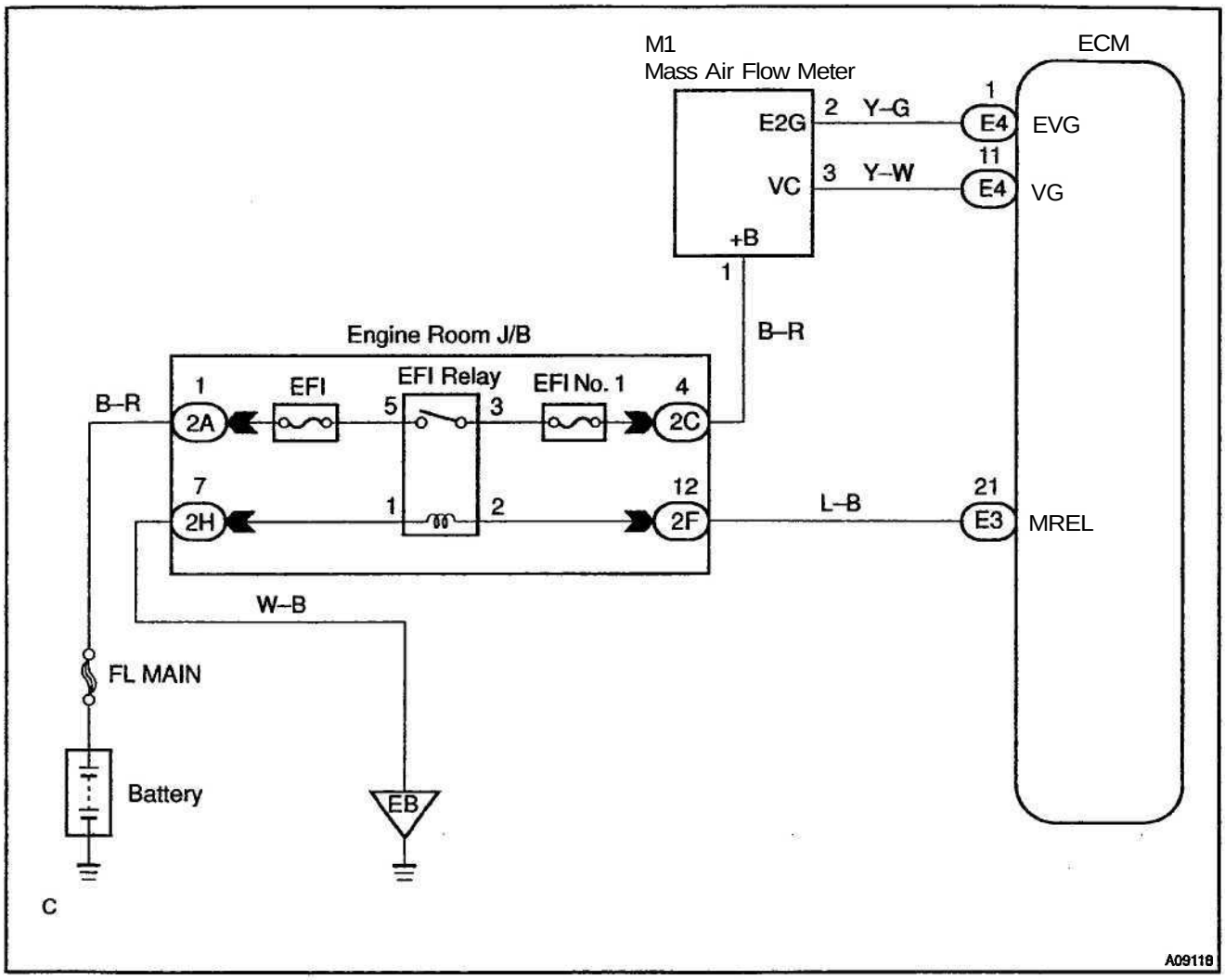

INSPECTION PROCEDURE

HINT:

Read freeze frame data using TOYOTA hand–held tester or OBD II scan tool. Because freeze frame records the engine conditions when the malfunction is detected, when troubleshooting it is useful for determining whether the vehicle was running or stopped, the engine warmed up or not, the air-fuel ratio lean or rich, etc. at the time of the malfunction.

1	**Connect OBD II scan tool or TOYOTA hand–held tester, and read value of mass air flow rate.**

PREPARATION:

(a) Connect the OBD II scan tool or TOYOTA hand–held tester to the DLC3.
(b) Turn ignition switch ON and push the OBD II scan tool or TOYOTA hand–held tester main switch ON.
(c) Start the engine.

CHECK;
Read mass air flow rate on the OBD II scan tool or TOYOTA hand–held tester.
RESULT:

	Type I	Type II
Mass air flow rate (gm/sec.)	0.0	271.0 or more

Type I → **Go to step 2.**

Type II → **Go to step 5.**

2 Check voltage of mass air flow meter power source.

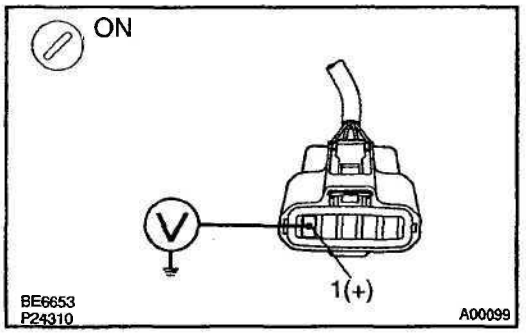

PREPARATION:
(a) Disconnect the mass air flow meter connector.
(b) Turn ignition switch ON.
CHECK:
Measure voltage between terminal 4 of mass air flow meter connector and body ground.
OK:
Voltage: 9 – 14 V

NG → **Check for open in harness and connector between EFI main relay (Marking: EFI) and mass air flow meter (See page IN–30).**

OK

3 Check voltage between terminal VG of ECM connector and body ground.

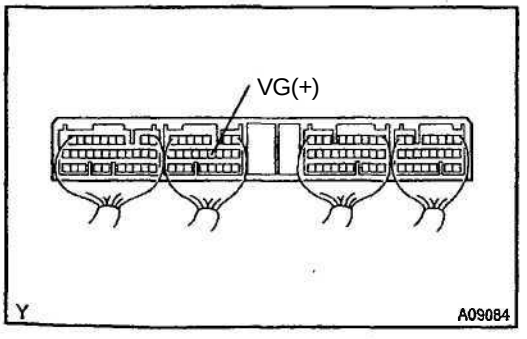

PREPARATION:
(a) Remove the ECM cover.
(b) Start the engine.
CHECK:
Measure voltage between terminal VG of ECM and body ground while engine is idling.
OK:
Voltage:
1.1 – 1.5 V (P or N position and A/C switch OFF)

OK → **Check and replace ECM (See page IN–30).**

NG

4	Check for open and short in harness and connector between mass air flow meter and ECM (See page **IN–30**).

NG → **Repair or replace harness or connector.**

OK →

Replace mass air flow meter.

5	Check continuity between terminal E2 of ECM connector and body ground.

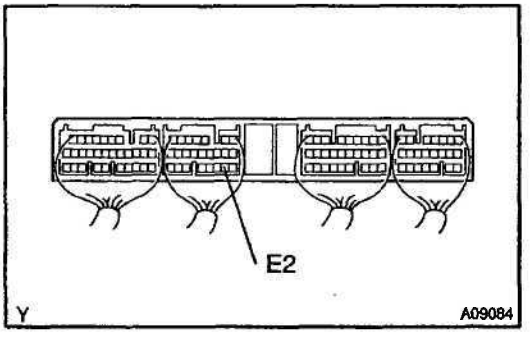

PREPARATION:
Remove the ECM cover.
CHECK:
Check continuity between terminal E2 of ECM connector and body ground.
OK:
Continuity (1 Ω or less)

NG → **Check and replace ECM (See page IN–30).**

OK →

6	Check for open in harness and connector between mass air flow meter and ECM (See page **IN–30**).

NG → Repair or replace harness or connector.

OK →

Replace mass air flow meter.

DTC	P0101	Mass Air Flow Circuit Range/Performance Problem

CIRCUIT DESCRIPTION

Refer to DTC P0100 (Mass Air Flow Circuit Malfunction) on page DI-23.

DTC No.	DTC Detecting Condition	Trouble Area
P0101	Conditions (a), (b) and (c) continue 10 sec. or more with engine speed 900 rpm or less: (2 trip detection logic) (a) Throttle valve fully closed (b) Mass air flow meter output > 2.2 V (c) THW > 70°C	• Mass air flow meter
	Conditions (a) and (b) continue 10 sec. or more with engine speed 1,500 rpm or more: (2 trip detection logic) (a) VTA a 0.63 V (b) Mass air flow meter output < 1.06 V	

WIRING DIAGRAM

Refer to DTC P0100 (Mass Air Flow Circuit Malfunction) on page DI-23 for the WIRING DIAGRAM.

INSPECTION PROCEDURE

HINT:

Read freeze frame data using TOYOTA hand-held tester or OBD II scan tool. Because freeze frame records the engine conditions when the malfunction is detected, when troubleshooting it is useful for determining whether the vehicle was running or stopped, the engine warmed up or not, the air-fuel ratio lean or rich, etc. at the time of the malfunction.

1	Are there any other codes (besides DTC P0101) being output?

NO → Replace mass air flow meter.

YES

Go to relevant DTC chart.

D0972-02

DTC	P0110	Intake Air Temp. Circuit Malfunction

CIRCUIT DESCRIPTION

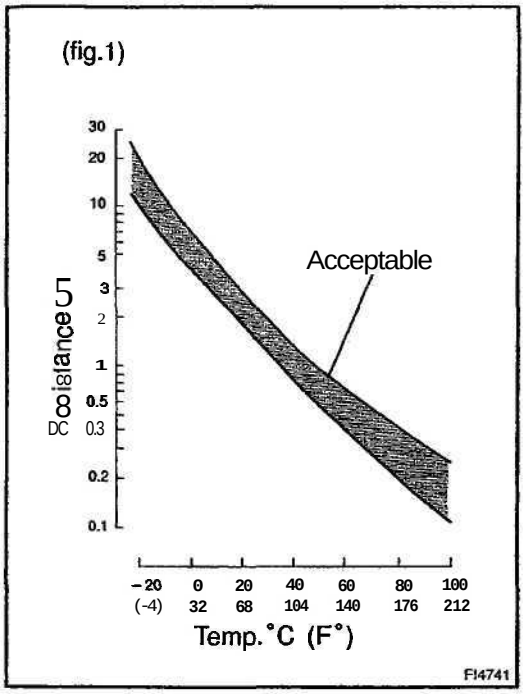

The intake air temp. sensor is built into the mass air flow meter and senses the intake air temperature.

A thermistor built in the sensor changes the resistance value according to the intake air temperature, the lower the intake air temperature, the greater the thermistor resistance value, and the higher the intake air temperature, the lower the thermistor resistance value (See fig.1).

The air intake temperature sensor is connected to the ECM (See below). The 5V power source voltage in the ECM is applied to the intake air temp. sensor from the terminal THA via a resistor R.

That is, the resistor R and the intake air temp. sensor are connected in series. When the resistance value of the intake air temp. sensor changes in accordance with changes in the intake air temperature, the potential at terminal THA also changes. Based on this signal, the ECM increases the fuel injection volume to improve driveability during cold engine operation.

If the ECM detects the DTC "P0110", it operates the fail safe function in which the intake air temperature is assumed to be 20°C (68°F).

DTC No.	DTC Detecting Condition	Trouble Area
P0110	Open or short in intake air temp. sensor circuit	• Open or short in intake air temp. sensor circuit • Intake air temp. sensor (built into mass air flow meter) •ECM

HINT:

After confirming DTC P0110, use the OBD II scan tool or TOYOTA hand–held tester to confirm the intake air temperature from CURRENT DATA.

Temperature Displayed	Malfunction
–40°C (–40°F)	Open circuit
140°C (284°F) or more	Short circuit

WIRING DIAGRAM

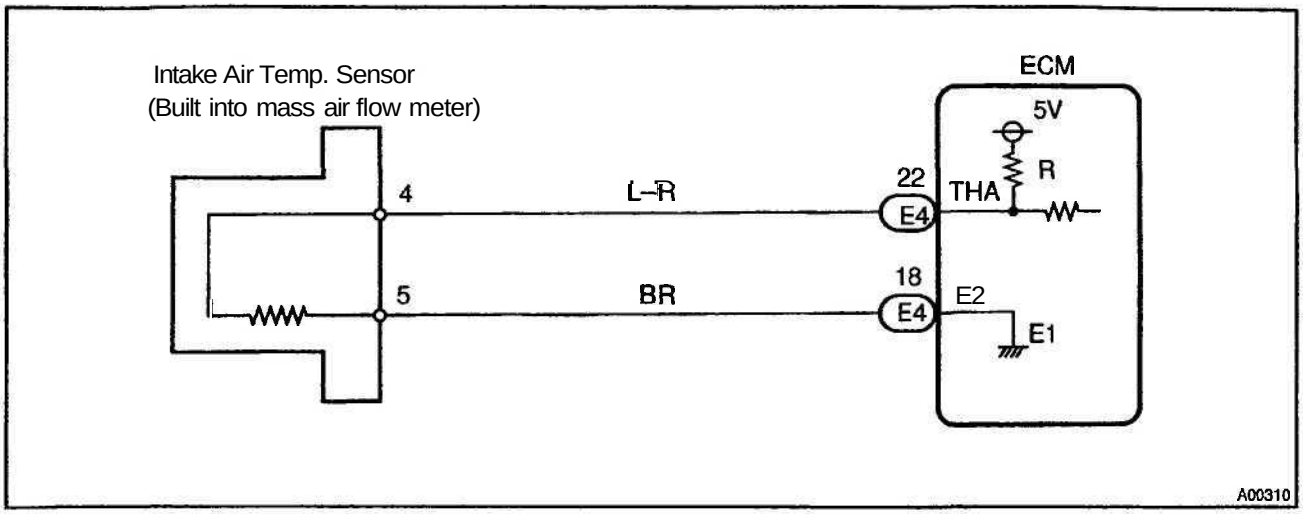

INSPECTION PROCEDURE

HINT:

- If DTC P100 (Mass Air Flow Meter Circuit Malfunction), P0101 (Mass Air Flow meter Circuit Range/Performance Ploblem), P0110 (Intake Air Temp. Circuit Malfunction), P0115 (Engine Coolant Temp. Circuit Malfunction) and P0120 (Throttle/Pedal Position Sensor/Switch "A" Circuit Malfunction) are output simultaneously, E2 (sensor ground) may be open.
- Read freeze frame data using TOYOTA hand–held tester or OBD II scan tool. Because freeze frame records the engine conditions when the malfunction is detected, when troubleshooting it is useful for determining whether the vehicle was running or stopped, the engine warmed up or not, the air-fuel ratio lean or rich, etc. at the time of the malfunction.

1	**Connect OBD II scan tool or TOYOTA hand-held tester, and read value of intake air temperature.**

PREPARATION:
(a) Connect the OBD II scan tool or TOYOTA hand–held tester to DLC3.
(b) Turn the ignition switch ON and push the OBD II scan tool or TOYOTA hand–held tester main switch ON.

CHECK:
Read temperature value on the OBD II scan tool or TOYOTA hand–held tester.

OK:
Same as actual air intake temperature.

HINT:
- If there is open circuit, OBD II scan tool or TOYOTA hand–held tester indicates - 40°C (- 40°F).
- If there is short circuit, OBD II scan tool or TOYOTA hand-held tester indicates 140°C (284°F) or more.

NG → **–40°C (–40°F) ....Go to step 2.**
140°C (284°F) or more ....Go to step 4.

OK

Check for intermittent problems (See page DI–3).

2	Check for open in harness or ECM.

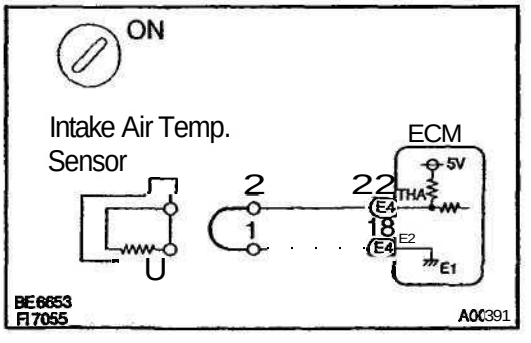

PREPARATION:
(a) Disconnect the intake temp. sensor connector.
(b) Connect sensor wire harness terminals together.
(c) Turn the ignition switch ON.

CHECK:
Read temp. value on the OBD II scan tool or TOYOTA hand–held tester.

OK:
Temp. value: **140°C (284°F)** or more

OK → **Confirm good connection at sensor. If OK, replace intake air temp. sensor.**

NG

3	Check for open in harness or **ECM.**

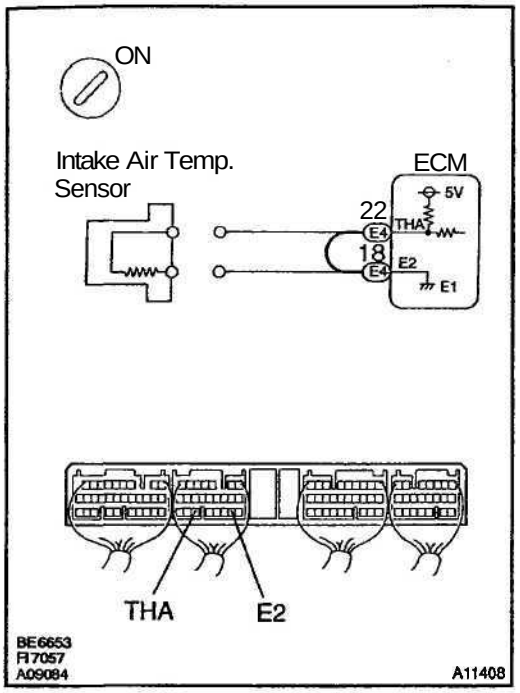

PREPARATION:

(a) Remove the ECM cover.

(b) Connect between terminals THA and E2 of the ECM connector.

HINT:

In take air temp. sensor connector is disconnected.

Before checking, do a visual and contact pressure check for the ECM connector (See page **IN-30).**

(c) Turn the ignition switch ON.

CHECK:

Read temperature value on the OBD II scan tool or TOYOTA hand-held tester.

OK:

Temperature **value: 140°C (284°F)** or more

OK	Open in harness between terminals E2 or THA, repair or replace harness.

NG

Confirm good connection at ECM. If OK, check and replace ECM (See page **IN-30).**

4	Check for short in harness and ECM.

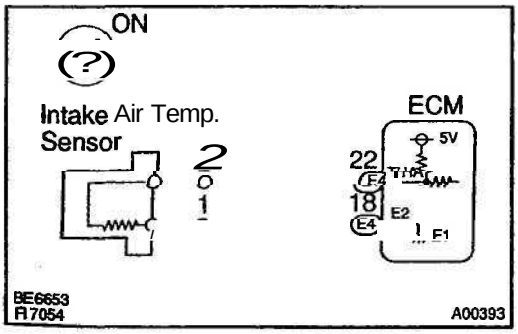

PREPARATION:

(a) Disconnect the mass air flow meter **connector.**

(b) Turn the ignition switch ON.

CHECK:

Read temperature value on the OBD II scan tool or TOYOTA hand-held tester.

OK:

Temperature value: **-40°C (-40°F)**

OK	Replace mass air **flow** meter.

NG

5	Check for short in harness or ECM.

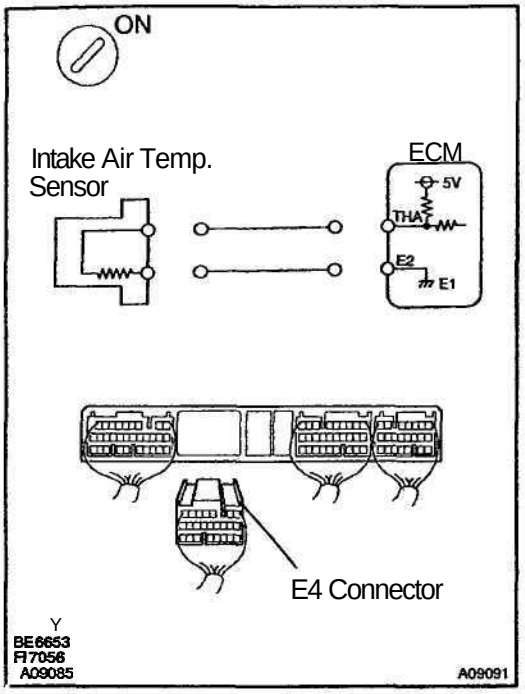

PREPARATION:

(a) Remove the ECM cover.

(b) Disconnect the E4 connector of the ECM.

HINT:

Intake air temp. sensor connector is disconnected.

(c) Turn the ignition switch ON.

CHECK:

Read temperature value on the OBD II scan tool or TOYOTA hand–held tester.

OK:

Temperature value: –40°C (–40°F)

OK → **Repair or replace harness or connector.**

NG → **Check and replace ECM (See page IN–30).**

DI390-02

DTC	P0115	Engine Coolant Temp. Circuit Malfunction

CIRCUIT DESCRIPTION

A thermistor built into the engine coolant temp. sensor changes the resistance value according to the engine coolant temp.
The structure of the sensor and connection to the ECM is the same as in the intake air temp. circuit malfunction shown on page DI–28.
If the ECM detects the DTC P0115, it operates fail safe function in which the engine coolant temperature is assumed to be 80°C (176°F).

DTC No.	Detection Item	Trouble Area
P0115	Open or short in engine coolant temp. sensor circuit	• Open or short in engine coolant temp. sensor circuit • Engine coolant temp. sensor • ECM

HINT:
After confirming DTC P0115, use the OBD II scan tool or TOYOTA hand–held tester to confirm the engine coolant temp. from "CURRENT DATA".

Temp. Displayed	Malfunction
–40°C (–40°F)	Open circuit
140°C (284°F) or more	Short circuit

WIRING DIAGRAM

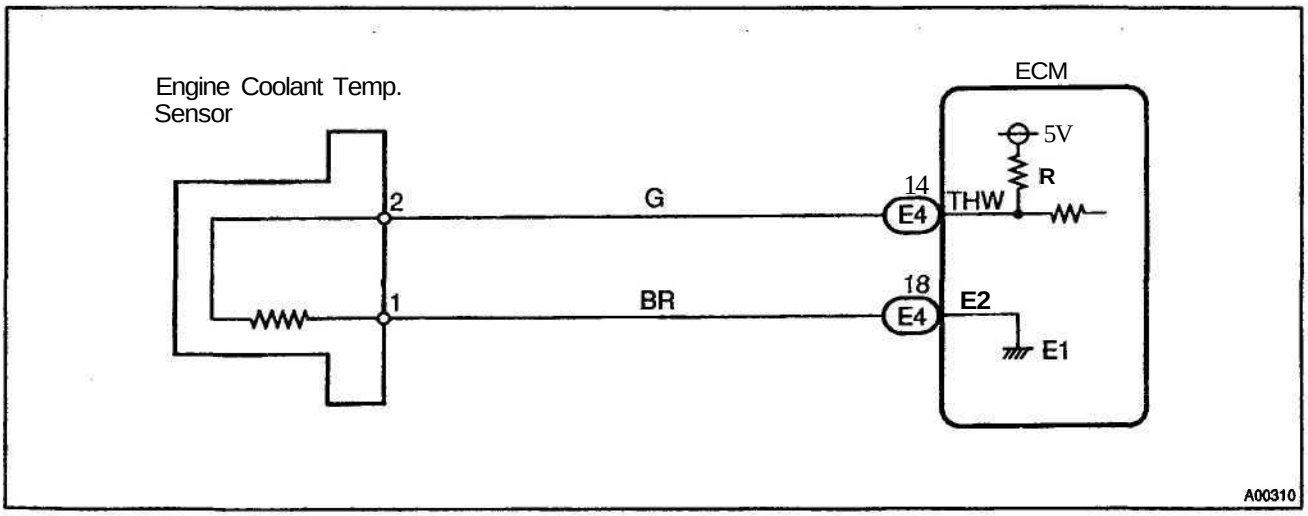

INSPECTION PROCEDURE

HINT:

- If DTC P0100 (Mass Air Flow Meter Circuit Malfunction), P0101 (Mass Air Flow Meter Circuit Range/Performance Problem), P0110 (Intake Air Temp. Circuit Malfunction), P0115 (Engine Coolant Temp. Circuit Malfunction), P0120 (Throttle/Pedal Position Sensor/Switch "A" Circuit Malfunction) are output simultaneously, E2 (sensor ground) may be open.
- Read freeze frame data using TOYOTA hand–held tester or OBD II scan tool. Because freeze frame records the engine conditions when the malfunction is detected, when troubleshooting it is useful for determining whether the vehicle was running or stopped, the engine warmed up or not, the air–fuel ratio lean or rich, etc. at the time of the malfunction.

1	**Connect OBD II scan tool or TOYOTA hand–held tester, and read value of engine coolant temperature.**

PREPARATION:

(a) Connect the OBD II scan tool or TOYOTA hand–held tester to the DLC3.
(b) Turn the ignition switch ON and push the OBD II scan tool or TOYOTA hand–held tester main switch ON.

CHECK:

Read temperature value on the OBD II scan tool or TOYOTA hand–held tester.

OK:

Same as actual engine coolant temperature

HINT:

- If there is open circuit, OBD II scan tool or TOYOTA hand–held tester indicates –40°C (–40°F).
- If there is open circuit, OBD II scan tool or TOYOTA hand–held tester indicates 140°C (284°F) or more.

NG → **–40°C (–40°F) ... Go to step 2.**
140°C (284°F) or more ... Go to step 4.

OK →

Check for intermittent problems (See page DI–3).

2	Check for open in harness or ECM.

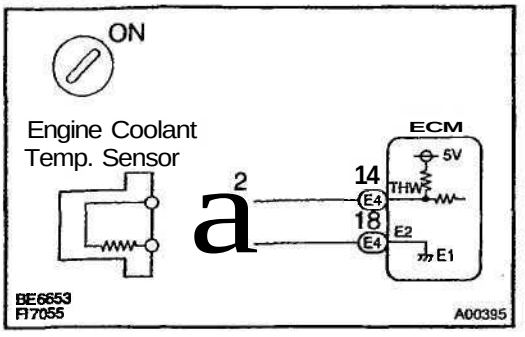

PREPARATION:

(a) Disconnect the engine coolant temp. sensor connector.
(b) Connect the sensor wire harness terminals together.
(c) Turn the ignition switch ON.

CHECK:

Read temperature value on the OBD II scan tool or TOYOTA hand–held tester.

OK:

Temperature value: 140°C (284°F) or more

OK	Confirm good connection at sensor. If OK, replace engine coolant temp. sensor.

NG

3	Check for open in harness or ECM.

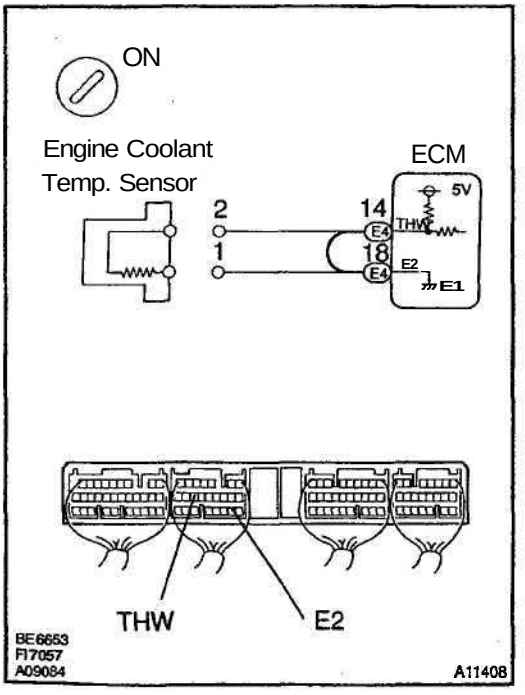

PREPARATION:

(a) Remove the ECM cover.
(b) Connect between terminals THW and E2 of the ECM connector.

HINT:

Engine coolant temp. sensor connector is disconnected. Before checking, do a visual and contact pressure check for the ECM connector (See page IN–30).

(c) Turn the ignition switch ON.

CHECK:

Read temperature value on the OBD II scan tool or TOYOTA hand–held tester.

OK:

Temperature value: 140°C (284°F) or more

OK	Open in harness between terminals E2 or THW, repair or replace harness.

NG

Confirm good connection at ECM. If OK, check and replace ECM (See page IN–30).

4	Check for short in harness and ECM.

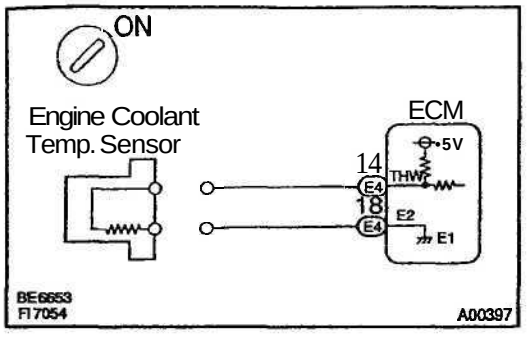

PREPARATION:
(a) Disconnect the engine coolant temp. sensor connector.
(b) Turn the ignition switch ON.

CHECK:
Read temperature value on the OBD II scan tool or TOYOTA hand–held tester.

OK:
Temperature value: - 40°C (–40°F)

OK	Replace engine coolant temp. sensor.

NG

5	Check for short in harness or ECM.

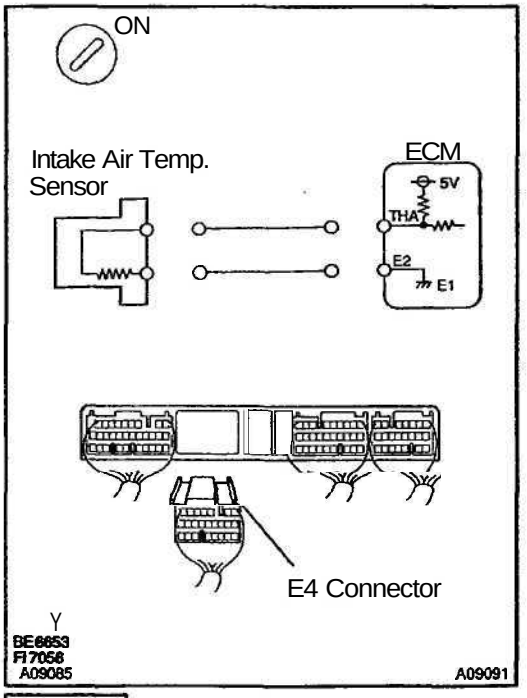

PREPARATION:
(a) Remove the ECM cover.
(b) Disconnect the E4 connector of the ECM.
HINT:
Engine coolant temp. sensor connector is disconnected.
(c) Turn the ignition switch ON.

CHECK:
Read temperature value on the OBD II scan tool or TOYOTA hand–held tester.

OK:
Temperature value: –40°C (–40°F)

OK	Repair or replace harness or connector.

NG

Check and replace ECM (See page IN–30).

DTC	P0116	Engine Coolant Temp. Circuit Range/ Performance Problem

CIRCUIT DESCRIPTION

Refer to DTC P0115 (Engine Coolant Temp. Circuit Malfunction) on page DI-33.

DTC No.	DTC Detecting Condition	Trouble Area
P0116	When the engine starts, the water temp. is -7°C (20°F) or less. And, 20 min. or more after the engine starts, the engine temp. sensor value is 20°C (68°F) or less (2 trip detection logic)	• Engine coolant temp. sensor • Cooling system
	When the engine starts, the water temp. is between -7°C (20°F) and 10°C (50°F) And, 5 min. or more after the engine starts, the engine coolant temp. sensor value is 20°C (68°F) or less (2 trip detection logic)	

INSPECTION PROCEDURE

HINT:

- If DTC P0115 (Engine Coolant Temp. Circuit Malfunction) and P0116 (Engine Coolant Temp. Circuit Range/Performance Problem) are output simultaneously, engine coolant temp. sensor circuit may be open. Perform troubleshooting of DTC P0115 first.
- Read freeze frame data using TOYOTA hand-held tester or OBD II scan tool. Because freeze frame records the engine conditions when the malfunction is detected, when troubleshooting it is useful for determining whether the vehicle was running or stopped, the engine warmed up or not, the air-fuel ratio lean or rich, etc. at the time of the malfunction.

1	Are there any other codes (besides DTC P0116) being output?

YES → Go to relevant DTC chart.

NO

2	Check thermostat (See page CO-8).

NG → Replace thermostat.

OK

Replace engine coolant temp. sensor.

DTC	P0120	Throttle Position Sensor/Switch "A" Circuit Malfunction

CIRCUIT DESCRIPTION

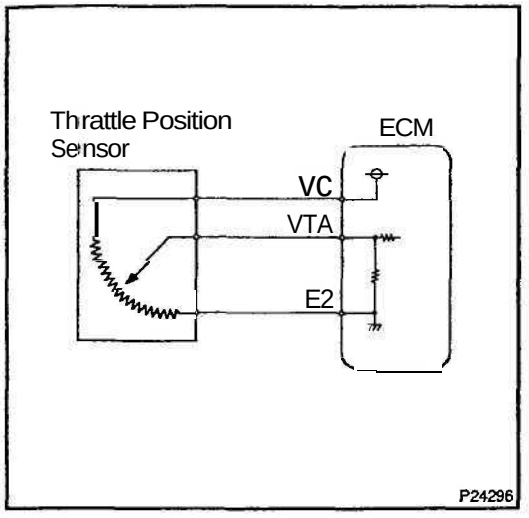

The throttle position sensor is mounted in the throttle body and detects the throttle valve opening angle. When the throttle valve is fully closed, a voltage of approximately 0.3 - 0.8 V is applied to terminal VTA of the ECM. The voltage applied to the terminals VTA of the ECM increases in proportion to the opening angle of the throttle valve and becomes approximately 3.2 – 4.9 V when the throttle valve is fully opened. The ECM judges the vehicle driving conditions from this signal input from terminal VTA, and uses it as one of the conditions for deciding the air-fuel ratio correction, power increase correction and fuel–cut control etc.

DTC No.	DTC Detecting Condition	Trouble Area
P0120	Condition (a) or (b) continues with more than 5 sec.: (a) VTA < 0.1 V (b) VTA > 4.9 V	• Open or short in throttle position sensor circuit • Throttle position sensor •ECM

HINT:
After confirming DTC P0120, use the OBD II scan tool or TOYOTA hand–held tester to confirm the throttle valve opening percentage.

Throttle valve opening position expressed as percentage		Trouble Area
Throttle valve fully closed	Throttle valve fully open	
0 %	0 %	VC line open VTA line open or short
Approx. 100 %	Approx. 100 %	E2 line open

WIRING DIAGRAM

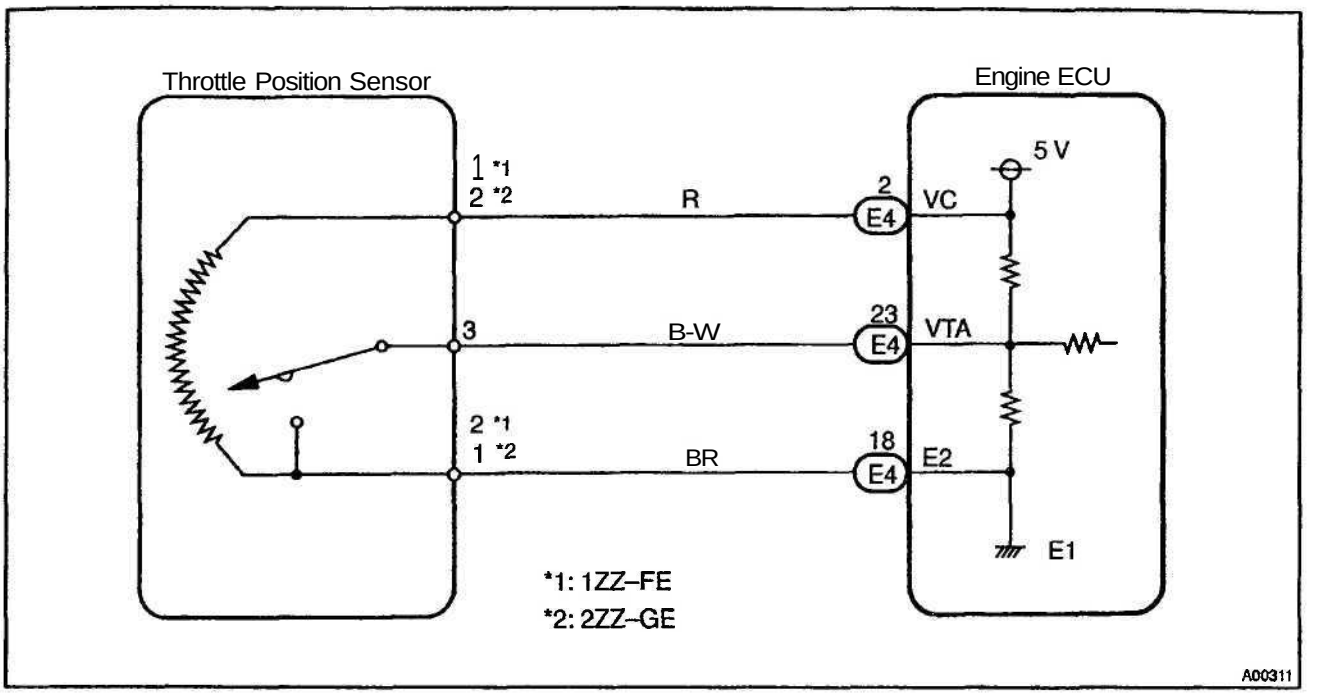

INSPECTION PROCEDURE

HINT:

- If DTC P0100 (Mass Air Flow Meter Circuit Malfunction), P0106 (Mass Air Flow Meter Circuit Range/ Performance Problem), P0110 (Intake Air Temp. Circuit Malfunction), P0115 (Engine Coolant Temp. Circuit Malfunction), P0120 (Throttle/Pedal Position Sensor/Switch "A" Circuit Malfunction) are output simultaneously, E2 (sensor ground) may be open.
- Read freeze frame data using TOYOTA hand–held tester or OBD II scan tool. Because freeze frame records the engine conditions when the malfunction is detected, when troubleshooting it is useful for determining whether the vehicle was running or stopped, the engine warmed up or not, the air-fuel ratio lean or rich, etc. at the time of the malfunction.

1	**Connect the OBD II scan tool or TOYOTA hand–held tester, read the throttle valve opening percentage.**

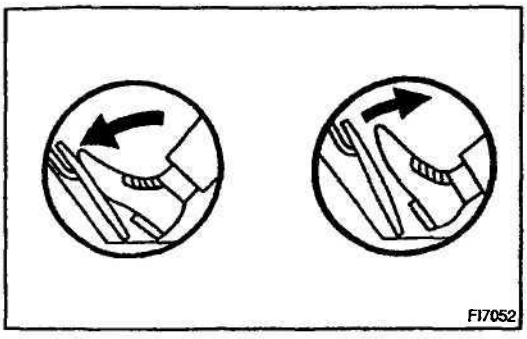

PREPARATION:

(a) Connect the OBD II scan tool or TOYOTA hand–held tester to DLC3.

(b) Turn the ignition switch ON and push the OBD II scan tool or TOYOTA hand–held tester main switch ON.

CHECK:

Read the throttle valve opening percentage.

OK:

Throttle valve	Throttle valve opening position expressed as percentage
Fully open	Approx. 70 %
Fully closed	Approx. 10 %

OK → **Check for intermittent problems (See page DI–3).**

NG

2	**Check voltage between terminal VC of throttle position sensor connector and body ground.**

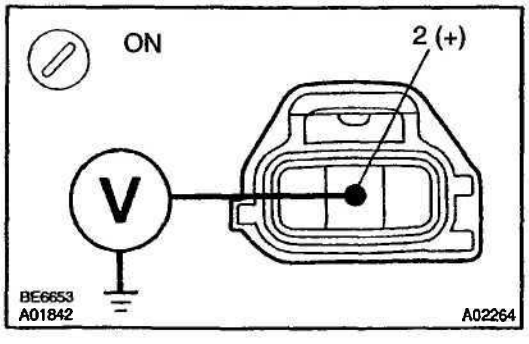

PREPARATION:

(a) Disconnect the throttle position sensor connector.

(b) Turn the ignition switch ON.

CHECK:

Measure voltage between terminal VC of the throttle position connector and body ground.

OK:

Voltage: 4.5 – 5.5 V

NG → **Go to step 5.**

OK

3	Check throttle position sensor (See page **SF–33**).

NG → Replace throttle position sensor.

OK

4	**Check voltage between terminals VTA and E2 of ECM connector.**

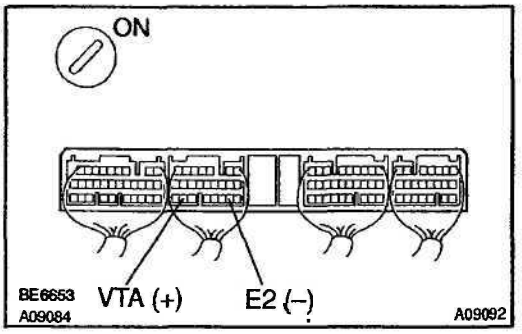

PREPARATION:

(a) Remove the ECM cover.

(b) Turn the ignition switch ON.

CHECK:

Measure voltage between terminals VTA and E2 of the ECM connector.

OK:

Throttle valve	Voltage
Fully closed	0.3 – 1.0 V
Fully open	3.2 – 4.9 V

NG → **Check for open and short in harness and connector between ECM and throttle position sensor (VTA or E2 line) (See page IN–30).**

OK

Check and replace ECM (See page IN–30).

5	Check voltage between terminals VC and E2 of ECM connector.

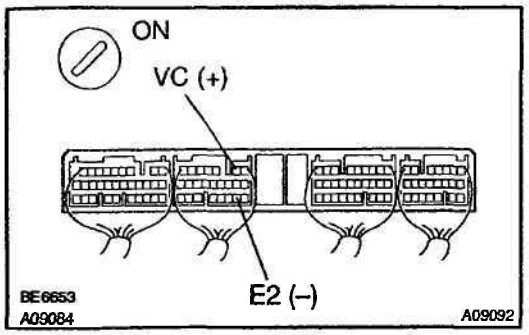

PREPARATION:

(a) Remove the ECM cover.

(b) Turn ignition switch ON.

CHECK:

Measure voltage between terminals VC and E2 of the ECM connector.

OK:

Voltage: 4.5 – 5.5 V

NG → **Check and replace ECM (See page IN–30).**

OK →

Check for open in harness and connector between ECM and sensor (VC line) (See page IN–30).

DTC	P0121	Throttle/Pedal Position Sensor/Switch "A" Circuit Range/Performance Problem

CIRCUIT DESCRIPTION

Refer to DTC P0120 (Throttle/Pedal Position Sensor/Switch "A" Circuit Malfunction) on page DI–38.

DTC No.	Detection Item	Trouble Area
P0121	After the vehicle speed has been exceeded 30 km/h (19 mph) even once, the output value of the throttle position sensor is out of the applicable range while the vehicle speed between 30 km/h (19 mph) and 0 km/h (0 mph). (2 trip detection logic)	• Throttle position sensor • ECM

INSPECTION PROCEDURE

HINT:
Read freeze frame data using TOYOTA hand–held tester or OBD II scan tool. Because freeze frame records the engine conditions when the malfunction is detected, when troubleshooting it is useful for determining whether the vehicle was running or stopped, the engine warmed up or not, the air-fuel ratio lean or rich, etc. at the time of the malfunction.

1	Are there any other codes (besides DTC P0121) being output?

YES → Go to relevant DTC chart.

NO →

Replace throttle position sensor.

DTC	P0125	Insufficient Temp. for Closed Loop Fuel Control

CIRCUIT DESCRIPTION

To obtain a high purification rate for the CO, HC and NOx components of the exhaust gas, a three-way catalytic converter is used, but for the most efficient use of the three-way catalytic converter, the air-fuel ratio must be precisely controlled so that it is always close to the stoichiometric air-fuel ratio.
The oxygen sensor has the characteristic whereby its output voltage changes suddenly in the vicinity of the stoichiometric air-fuel ratio. This is used to detect the oxygen concentration in the exhaust gas and provide feedback to the computer for control of the air-fuel ratio.
When the air-fuel ratio becomes LEAN, the oxygen concentration in the exhaust increases and the oxygen sensor informs the ECM of the LEAN condition (small electromotive force: < 0.45 V).
When the air-fuel ratio is RICHER than the stoichiometric air-fuel ratio the oxygen concentration in the exhaust gas in reduced and the oxygen sensor informs the ECM of the RICH condition (large electromotive force: > 0.45V).
The ECM judges by the electromotive force from the oxygen sensor whether the air-fuel ratio is RICH or LEAN and controls the injection time accordingly. However, if malfunction of the oxygen sensor causes output of abnormal electromotive force, the ECM is unable to perform accurate air-fuel ratio control.
The oxygen sensors include a heater which heats the zirconia element. The heater is controlled by the ECM. When the intake air volume is low (the temp. of the exhaust gas is low) current flows to the heater to heat the sensor for accurate oxygen concentration detection.

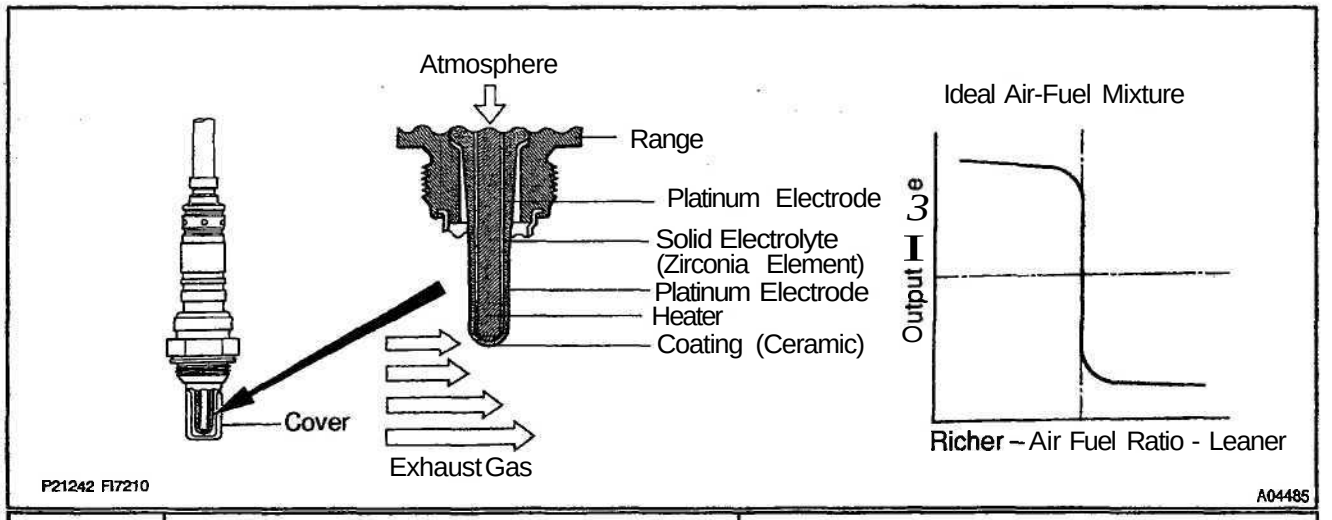

DTC No.	DTC Detecting Condition	Trouble Area
P0125	After the engine is warmed up, oxygen sensor (bank 1 sensor 1) output does not indicate RICH (≧ 0.45 V) even once when conditions (a), (b), and (c) continue for at least 1.5 min. (a) Engine speed: 1,500 rpm or more (b) Vehicle speed: 40 - 100 km/h (25 - 62 mph) (c) Throttle valve does not fully closed	• Fuel system • Air induction system • injector • Ignition system • Gas leakage on exhaust system • Open or short in heated oxygen sensor (bank 1 sensor 1) circuit • Heated oxygen sensor (bank 1 sensor 1) • ECM

HINT:

After confirming DTC **P0125,** use the OBD II scan tool or TOYOTA hand-held tester to confirm voltage output of oxygen sensor (bank 1 sensor 1) from "CURRENT DATA".

If voltage output of oxygen sensor (bank 1 sensor 1) is less than 0.1 V, oxygen sensor (bank 1 sensor 1) circuit may be open or short.

WIRING DIAGRAM

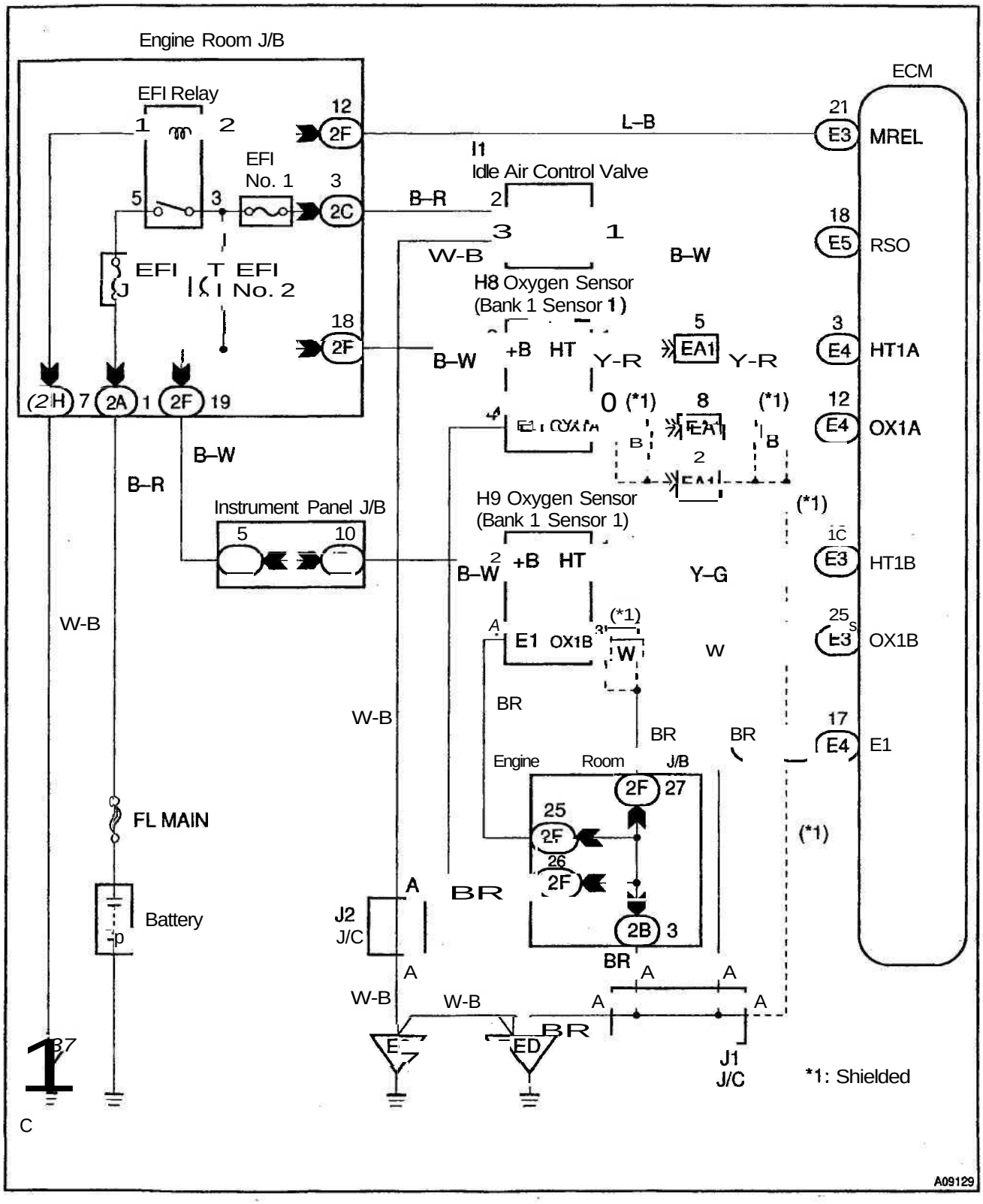

INSPECTION PROCEDURE

HINT:

- If the vehicle run out of fuel, the air-fuel ratio is LEAN and DTC P0125 will be recorded . The MIL then comes on.
- Read freeze frame data using TOYOTA hand–held tester or OBD II scan tool. Because freeze frame records the engine conditions when the malfunction is detected, when troubleshooting it is useful for determining whether the vehicle was running or stopped, the engine warmed up or not, the air-fuel ratio lean or rich, etc at the time of the malfunction.

1	Are there any other codes (besides DTC P0125) being output ?

YES → Go to relevant DTC chart.

NO

2	**Connect the OBD II scan tool or TOYOTA hand–held tester and read value for voltage output of oxygen sensor (bank 1 sensor 1).**

PREPARATION:

(a) Connect the OBD II scan tool or TOYOTA hand–held tester to the DLC3.

(b) Warm up engine to normal operating temp (above 75°C).

CHECK:

Read voltage output of the oxygen sensor (bank 1 sensor 1) when engine is suddenly raced.

HINT:

Perform quick racing to 4,000 rpm 3 times using accelerator pedal.

OK:

Both oxygen sensor (bank 1 sensor 1) output a RICH signal (0.45 V or more) at least once.

OK → **Go to step 10.**

NG

3	**Check for open and short in harness and connector between ECM and oxygen sensor (bank 1 sensor 1) (See page IN–30).**

NG → **Repair or replace harness or connector.**

OK

4	**Check whether misfire is occurred or not by monitoring DTC and data list.**

NG → **Perform troubleshooting for misfire (See page DI–64).**

OK

5	Check air induction system (See page **SF–1).**

NG → Repair or replace induction system.

OK

6	**Check fuel pressure (See page SF–6).**

NG → **Check and repair fuel pump, fuel pipe line and filter (See page SF–1).**

OK

7	Check injector injection (See page **SF–22).**

NG → Replace injector.

OK

8	Check gas leakade on exhaust system.

NG → Repair or replace.

OK

Replace oxygen sensor (bank 1 sensor 1).

9	Perform confirmation driving pattern (See page DM9).

Go

10	Is there DTC **P0125** being output again?

YES → Check and replace **ECM.**

NO

11	Did vehicle runs out of fuel in the past?

NO → Check for intermittent problems.

YES

DTC **P0125** is caused by running out of fuel.

DTC	P0130	Oxygen Sensor Circuit Malfunction (Bank 1 Sensor 1)

CIRCUIT DESCRIPTION

Refer to DTC P0125 (Insufficient Coolant Temp. for Closed Loop Fuel Control) on page DI–44.

DTC No.	DTC Detecting Condition	Trouble Area
P0130	Voltage output of oxygen sensor remains at 0.4 V or more, or 0.55 V or less, during idling after the engine is warmed up (2 trip detection logic)	• Open or short in heated oxygen sensor circuit • Heated oxygen sensor • Air induction system •EGR system • Fuel pressure •Injector • ECM

HINT:
Sensor 1 refers to the sensor closer to the engine body.
The oxygen sensor's output voltage and the short-term fuel trim value can be read using the OBD II scan tool or TOYOTA hand-held tester.

WIRING DIAGRAM

Refer to DTC P0125 (Insufficient Coolant Temp. for Closed Loop Fuel Control) on page DI–44 for the WIRING DIAGRAM.

CONFIRMATION DRIVING PATTERN

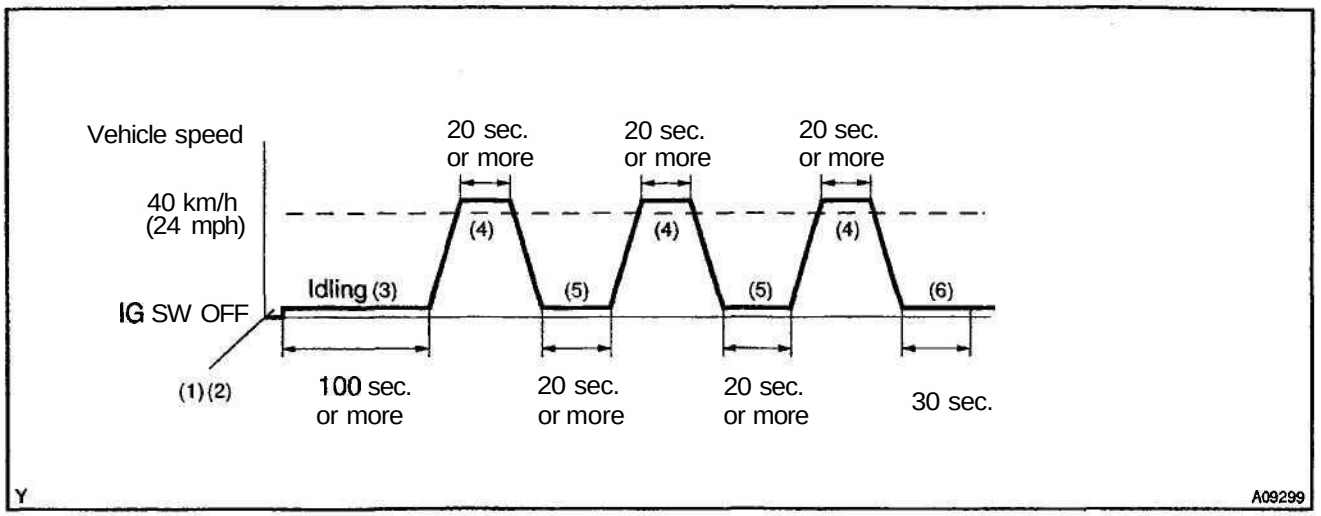

(1) Connect the TOYOTA hand–held tester to the DLC3.
(2) Switch the TOYOTA hand–held tester from normal mode to check mode (See page DI–3).
(3) Start the engine and let the engine idle for 100 sec. or more.
(4) Drive the vehicle at 40 km/h (24 mph) or more for 20 sec. or more.
(5) Let the engine idle for 20 sec. or more.
(6) Let the engine idle for 30 sec.

HINT:
If a malfunction exists, the MIL will light up during step (6).

NOTICE:
If the conditions in this test are not strictly followed, detection of the malfunction will not be possible. If you do not have a TOYOTA hand–held tester, turn the ignition switch OFF after performing steps (3) to (6), then perform steps (3) to (6) again.

INSPECTION PROCEDURE

HINT:
Read freeze frame data using TOYOTA hand–held tester or OBD II scan tool. Because freeze frame records the engine conditions when the malfunction is detected, when troubleshooting it is useful for determining whether the vehicle was running or stopped, the engine warmed up or not, the air–fuel ratio lean or rich, etc. at the time of the malfunction.

1	Are there any other codes (besides DTC P0130) being output?

YES → Go to relevant DTC chart.

NO

2	**Check the output voltage of oxygen sensor during idling.**

PREPARATION:

Warm up the oxygen sensor the engine at 2,500 rpm for approx. 90 sec.

CHECK:

Use the OBD II scan tool or TOYOTA hand–held tester read the output voltage of the oxygen sensor during idling.

OK:

Oxygen sensor output voltage:

Alternates repeatedly between less than 0.4 V and more than 0.55 V (See the Following table).

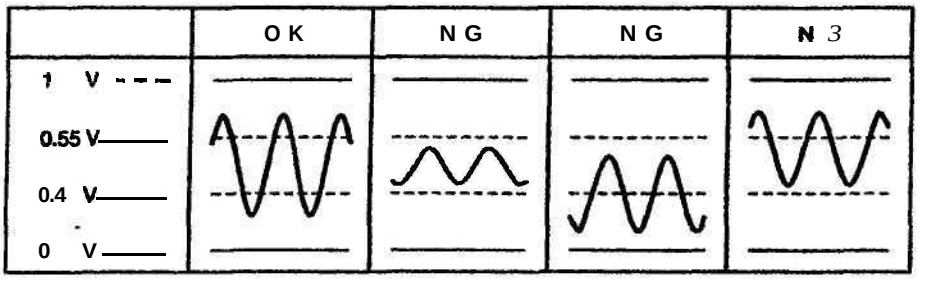

P18349

OK → **Perform confirmation driving pattern (See page DM9).**

NG

3	**Check for open and short in harness and connector between ECM and oxygen sensor (bank 1 sensor 1) (See page IN–20).**

NG → **Repair or replace harness or connector.**

OK

4	Check air induction system (See page **SF–1).**

NG → Repair or replace induction system.

OK

5	**Check fuel pressure (See page SF–6).**

NG → **Check and repair fuel pump, fuel pipe line and filter (See page SF–1).**

OK

6	Check injector injection (See page **SF–22).**

NG → Replace injector.

OK

Replace oxygen sensor (bank 1 sensor 1).

7	**Perform confirmation driving pattern (See page DI–49).**

Go

8	**Are there DTC P0130 being output again?**

YES → **Check for intermittent problems (See page DI–3).**

NO

Check and replace ECM.

DTC	P0133	Oxygen Sensor Circuit Slow Responce (Bank 1 Sensor 1)

CIRCUIT DESCRIPTION

Refer to DTC P0125 (Insufficient Coolant Temp. for Closed Loop Fuel Control) on page DI–44.

DTC No.	DTC Detecting Condition	Trouble Area
P0133	Response time for the oxygen sensor's voltage output to change from rich to lean, or from lean to rich, is 1 sec. or more during idling after the engine is warmed up (2 trip detection logic)	• Open or short in heated oxygen sensor circuit • Heated oxygen sensor • Air induction system • EGR system • Fuel pressure • Injector • ECM

HINT:
Sensor 1 refers to the sensor closer to the engine body.

INSPECTION PROCEDURE

HINT:
Read freeze frame data using TOYOTA hand–held tester or OBD II scantool. Because freeze frame records the engine conditions when the malfunction is detected, when troubleshooting it is useful for determining whether the vehicle was running or stopped, the engine warmed up or not, the air-fuel ratio lean or rich, etc. at the time of the malfunction.

1	Are there any other codes (besides DTC P0133) being output?

YES → Go to relevant DTC chart.

NO

2	**Check the output voltage of oxygen sensor during idling.**

PREPARATION:
Warm up the oxygen sensor the engine at 2,500 rpm for approx. 90 sec.
CHECK:
Use the OBD II scan tool or TOYOTA hand–held tester read the output voltage of the oxygen sensor during idling.
OK:
Oxygen sensor output voltage:
Alternates repeatedly between less than 0.4 V and more than 0.55 V (See the Following table).

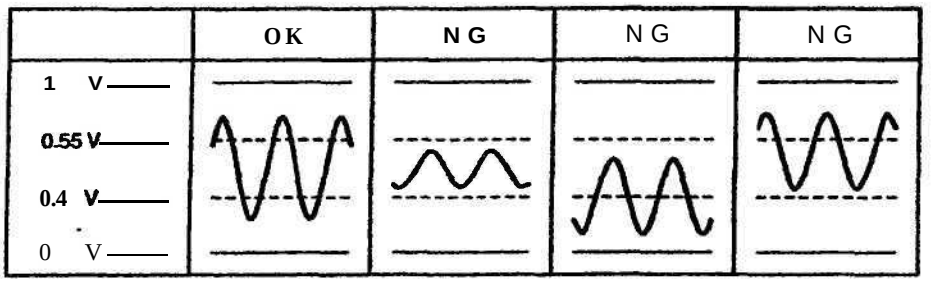

OK → **Perform confirmation driving pattern (See page DM9).**

NG

3	**Check for open and short in harness and connector between ECM and oxygen sensor (bank 1 sensor 1) (See page IN–20).**

NG → **Repair or replace harness or connector.**

OK

4	Check air induction system (See page **SF–1).**

NG → Repair or replace induction system.

OK

5	Check fuel pressure (See page **SF–6).**

NG → Check and repair fuel pump, fuel pipe line and filter **(See page SF–1).**

OK

6	Check injector injection (See page SF-22).

NG → Replace injector.

OK

Replace oxygen sensor (bank 1 sensor 1).

7	**Perform confirmation driving pattern (See page DI–49).**

Go

8	**Are there DTC P0133 being output again?**

YES → **Check for intermittent problems (See page DI–3).**

NO

Check and replace ECM.

DTC	P0135	Heated Oxygen Sensor Heater Circuit Malfunction (Bank1 Sensor1)

DTC	P0141	Heated Oxygen Sensor Heated Circuit Malfunction (Bank1 Sensor2)

CIRCUIT DESCRIPTION

Refer to DTC P0125 (Insufficient Coolant Temp. for Closed Loop Fuel Control) on page DI-44.

DTC No.	DTC Detecting Condition	Trouble Area
P0135 P0141	When the heater operates, heater current exceeds 2 A (2 trip detection logic)	• Open or short in heater circuit of heated oxygen sensor • Heated oxygen sensor heater • ECM
	Heater current of 0.2 A or less when the heater operates (2 trip detection logic)	

HINT:

- Bank 1 refers to the bank that includes cylinder No.1.
- Sensor 1 refers to the sensor closer to the engine body.
- Sensor 2 refers to the sensor farther away from the engine body.

WIRING DIAGRAM

Refer to DTC P0125 on page DI-44 for the WIRING DIAGRAM.

INSPECTION PROCEDURE

HINT:

Read freeze frame data using TOYOTA hand-held tester or OBD II scan tool. Because freeze frame records the engine conditions when the malfunction is detected, when troubleshooting it is useful for determining whether the vehicle was running or stopped, the engine warmed up or not, the air-fuel ratio lean or rich, etc. at the time of the malfunction.

1	Check voltage between terminals HT1, HT2 of ECM connectors and body ground.

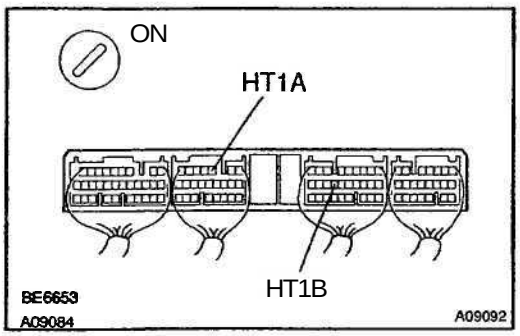

PREPARATION:

(a) Remove the ECM cover.
(b) Remove the 3 bolts from ECM.
(c) Turn the ignition switch ON.

CHECK:

Measure voltage between terminals HT1A, HT1B of ECM connectors and body ground.

HINT:

- Connect terminal HT1A to bank 1 sensor 1.
- Connect terminal HT1B to bank 1 sensor 2.

OK:

Voltage: 9 – 14 V

OK	Check and replace ECM (See page IN–30).

NG

2	Check resistance of heated oxygen sensor heater (See page SF–70).

NG	Replace heated oxygen sensor.

OK

Check and repair harness or connector between EFI main relay (Marking: EFI), heated oxygen sensor and ECM (See page IN–30).

DTC	P0136	Oxygen Sensor Circuit Malfunction (Bank 1 Sensor 2)

CIRCUIT DESCRIPTION

Refer to DTC P0125 (Insufficient Coolant Temp. for Closed Loop Fuel Control) on page DM4.

DTC No.	DTC Detecting Condition	Trouble Area
P0136	Voltage output of the heated oxygen sensor remains at 0.40 V or more, or 0.50 V or less when the vehicle is driven at 40 km/h (25 mph) or more after the engine is warmed up. (2 trip detection logic).	• Open or short in heated oxygen sensor circuit • Heated oxygen sensor

HINT:
Sensor 2 refers to the sensor farther away from the engine body.

WIRING DIAGRAM

Refer to DTC P0125 (Insufficient Coolant Temp. for Closed Loop Fuel Control) on page DI–44 for the WIRING DIAGRAM.

CONFIRMATION DRIVING PATTERN

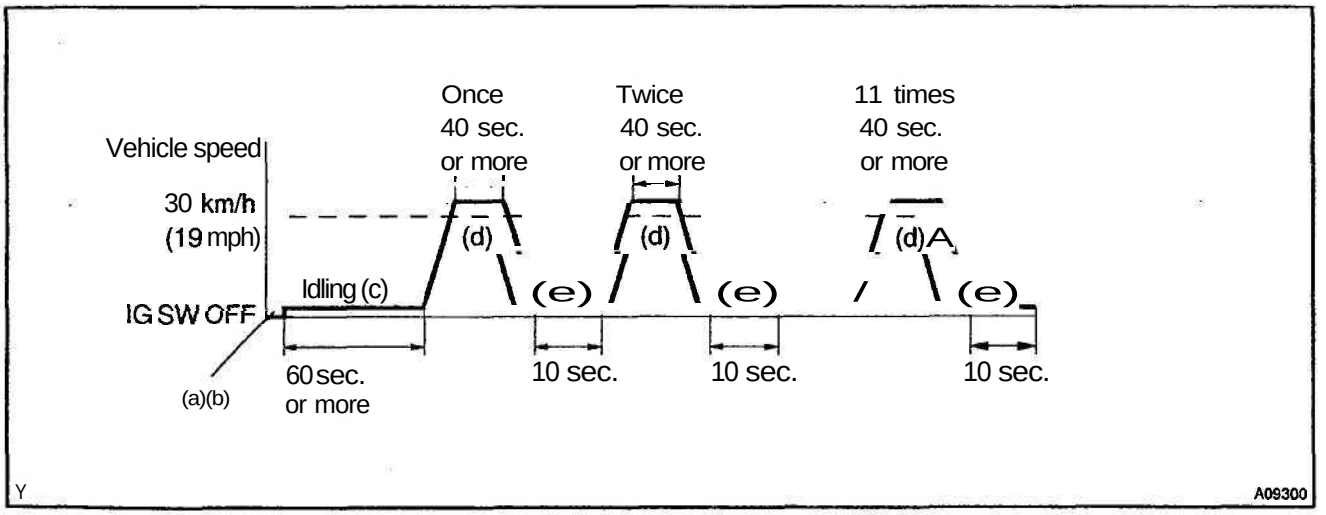

(a) Connect the hand–held tester to the DLC3.
(b) Switch the hand–held tester from the Normal Mode to the Check (Test) Mode (See page DI–3).
(c) Start the engine and let the engine idle for 60 seconds or more.
(d) Drive the vehicle at 30 km/h (18 mph) or more for 40 seconds or more.
(e) Let the engine idle for 10 seconds or more.
(f) Preform steps (d) to (e) 9 times.

HINT:
If a malfunction exists, the CHK ENG (MIL) will be indicated on the multi information display during step (f).

NOTICE:
If the conditions in this test are not strictly followed, detection of the malfunction will not be possible. If you do not have a hand–held tester, turn the ignition switch OFF after performing steps (c) to (f), then perform steps (c) to (f) again.

INSPECTION PROCEDURE

HINT:
Read freeze frame data using TOYOTA hand-held tester or OBD II scan tool. Because freeze frame records the engine conditions when the malfunction is detected, when troubleshooting it is useful for determining whether the vehicle was running or stopped, the engine warmed up or not, the air-fuel ratio lean or rich, etc. at the time of the malfunction.

1	Are there any other codes (besides DTC **P0136)** being output?

YES → Go to relevant DTC chart.

NO

2	**Check for open and short in harness and connector between ECM and oxygen sensor (See page IN–30).**

NG → **Repair or replace harness or connector.**

OK

3	**Check output voltage of oxygen sensor.**

PREPARATION:
(a) Connect the OBD II scan tool or TOYOTA hand–held tester to the DLC3.
(b) Warm up the engine to normal operating temp.
CHECK:
Read voltage output of oxygen sensor when engine suddenly raced.
HINT:
Perform quick racing to 4,000 rpm 3 min. using accelerator pedal.
OK:
Oxygen sensor output voltage: Alternates from 0.40 V or less to 0.50 V or more.

OK → **Check that each connector is properly connected.**

NG

Replace oxygen sensor.

DSCIX-02

DTC	P0171	System too Lean (Fuel Trim)

DTC	P0172	System too Rich (Fuel Trim)

CIRCUIT DESCRIPTION

Fuel trim refers to the feedback compensation value compared against the basic injection time. Fuel trim includes short-term fuel trim and long–term fuel trim.

Short–term fuel trim is the short-term fuel compensation used to maintain the air–fuel ratio at its ideal theoretical value. The signal from the oxygen sensor indicates whether the air-fuel ratio is RICH or LEAN compared to the ideal theoretical value, triggering a reduction in fuel volume if the air-fuel ratio is rich, and an increase in fuel volume if it is lean.

Long–term fuel trim is overall fuel compensation carried out long–term to compensate for continual deviation of the short-term fuel trim from the central value due to individual engine differences, wear over time and changes in the usage environment.

If both the short-term fuel trim and long–term fuel trim are LEAN or RICH beyond a certain value, it is detected as a malfunction and the MIL lights up.

DTC No.	DTC Detecting Condition	Trouble Area
P0171	When the air–fuel ratio feedback is stable after engine warming up, the fuel trim is considerably in error on the RICH side (2 trip detection logic)	• Air induction system • Injector blockage • Mass air flow meter • Engine coolant temp. sensor • Fuel pressure • Gas leakage on exhaust system • Open or short in A/F sensor (bank 1 sensor 1) circuit • A/F sensor (bank 1 sensor 1)
P0172	When the air–fuel ratio feedback is stable after engine wanning up, the fuel trim is considerably in error on the LEAN side. (2 trip detection logic)	• Injector leak, blockage • Mass air flow meter • Engine coolant temp. sensor • Ignition system • Fuel pressure • Gas leakage on exhaust system • Open or short in heated oxygen sensor (bank 1 sensor 1) circuit • Heated oxygen sensor (bank 1 sensor 1)

HINT:

- When the DTC P0171 is recorded, the actual air-fuel ratio is on the LEAN side. When DTC P0172 is recorded, the actual air-fuel ratio is on the RICH side.
- If the vehicle runs out of fuel, the air-fuel ratio is LEAN and DTC P0171 is recorded. The MIL then comes on.
- If the total of the short-term fuel trim value and long–term fuel trim value is within ± 38 %, the system is functioning normally.
- The oxygen sensor output voltage and the short–term fuel trim value can be read using the OBD II scan tool or TOYOTA hand–held tester.

INSPECTION PROCEDURE

HINT:
Read freeze frame data using TOYOTA hand–held tester or OBD II scan tool. Because freeze frame records the engine conditions when the malfunction is detected, when troubleshooting it is useful for determining whether the vehicle was running or stopped, the engine warmed up or not, the air-fuel ratio lean or rich, etc. at the time of the malfunction.

1	Check air induction system (See page **SF–1).**

NG → Repair or replace.

OK ↓

2	Check injector injection (See page **SF–22).**

NG → Replace injector.

OK ↓

3	**Check mass air flow meter and engine coolant temp. sensor (See page SF–63, SF–31).**

NG → **Repair or replace.**

OK ↓

4	Check for spark and ignition (See page **IG–1).**

NG → Repair or replace.

OK ↓

5	**Check fuel pressure (See page SF–6).**

NG → **Check and repair fuel pump, pressure regulator, fuel pipe line and filter.**

OK

6	Check gas leakade on exhaust system.

NG → Repair or replace.

OK

7	**Check the output voltage of oxygen sensor during idling.**

PREPARATION:

Warm up the oxygen sensor the engine at 2,500 rpm for approx. 90 sec.

CHECK:

Use the OBD II scan tool or TOYOTA hand–held tester read the output voltage of the oxygen sensor during idling.

OK:

Oxygen sensor output voltage:
Alternates repeatedly between less than 0.4 V and more than 0.55 V (See the following table).

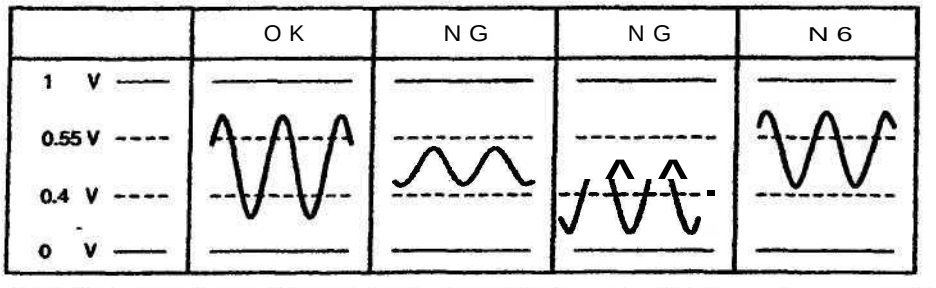

OK → **Go to step 9.**

NG

8	**Check for open and short in harness and connector between ECM and oxygen sensor (See page IN–20).**

NG → **Repair or replace harness or connector.**

OK

Replace oxygen sensor.

9	**Perform confirmation driving pattern (See page DI–49).**

GO

10	Is there DTC **P0171** or **P0172** being output again?

YES → Check and replace ECM.

NO

11	Did vehicle runs out of fuel in the past?

NO → Check for intermittent problems.

YES

DTC P0171 or P0172 is caused by running out of fuel.

DI389-03

DTC	P0300	Random/Multiple Cylinder Misfire Detected

DTC	P0301	Cylinder 1 Misfire Detected

DTC	P0302	Cylinder 2 Misfire Detected

DTC	P0303	Cylinder 3 Misfire Detected

DTC	P0304	Cylinder 4 Misfire Detected

CIRCUIT DESCRIPTION

Misfire: The ECM uses the crankshaft position sensor and camshaft position sensor to monitor changes in the crankshaft rotation for each cylinder.
The ECM counts the number of times the engine speed change rate indicates that misfire has occurred. And when the misfire rate equals or exceeds the count indicating that the engine condition has deteriorated, the MIL lights up.
If the misfire rate is high enough and the driving conditions will cause catalyst overheating, the MIL blinks when misfiring occurs.

DTC No.	DTC Detecting Condition	Trouble Area
P0300 P0301 P0302 P0303 P0304	Misfiring of random cylinders is detected during any particular 200 or 1,000 revolutions For any particular 200 revolutions for the engine, misfiring is detected which can cause catalyst overheating (This causes MIL to blink)	• Open or short in engine wire • Connector connection • Vacuum hose connection • Ignition system • Injector • Fuel pressure • Manifold absolute pressure sensor • Engine coolant temp. sensor • Compression pressure • Valve clearance • Valve timing • VVTL system (Locker arm) • ECM

HINT:
When the 2 or more codes for a misfiring cylinder are recorded repeatedly but no random misfire code is recorded, it indicates that the misfires were detected and recorded at different times.

WIRING DIAGRAM

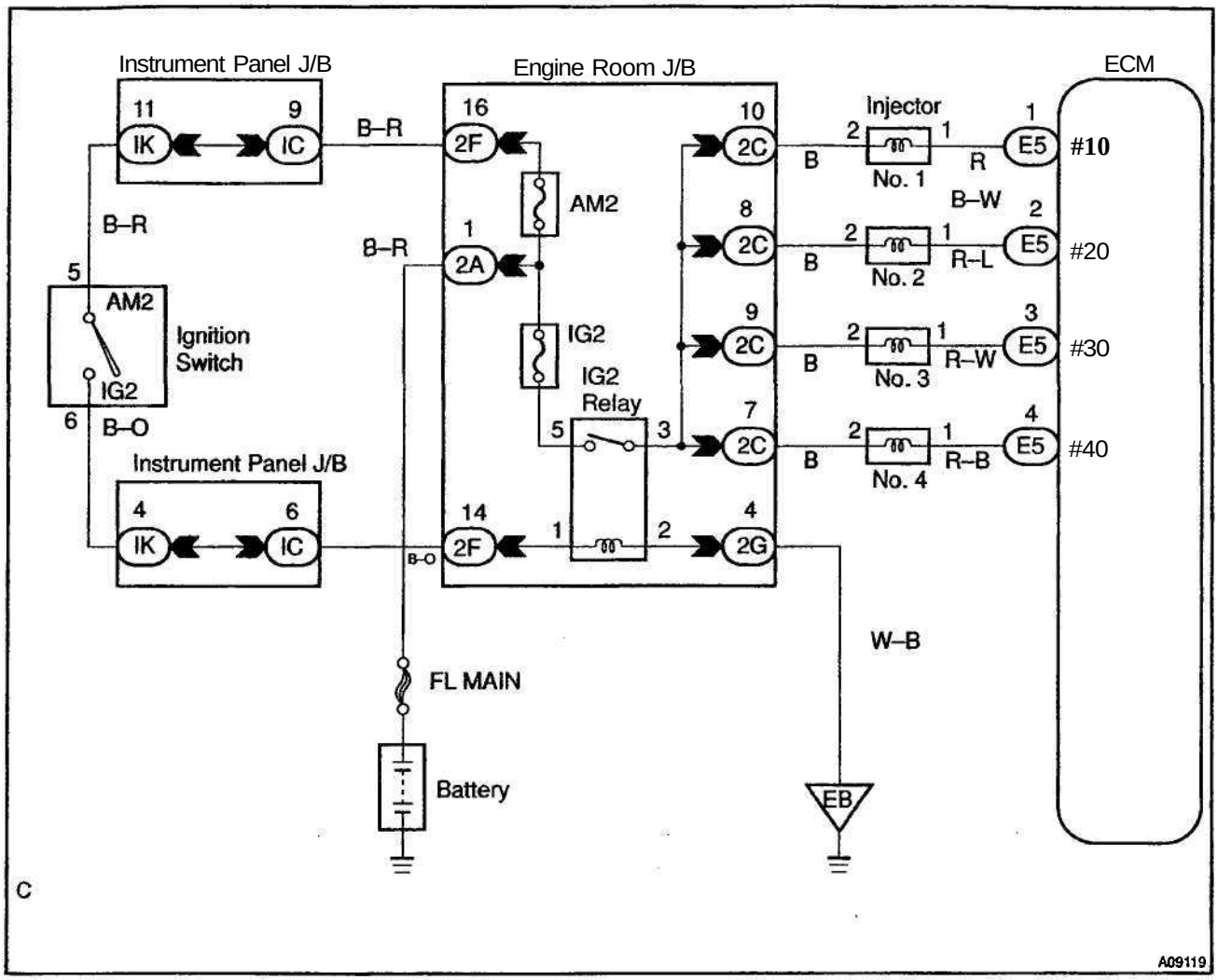

CONFIRMATION DRIVING PATTERN

(a) Connect the TOYOTA hand–held tester or OBD II scan tool.
(b) Record DTC and the freeze frame data.
(c) Use the TOYOTA hand–held tester to set to Check Mode (See page DI–3).
(d) Drive the vehicle several times with the engine speed, load and its surrounding range shown with ENGINE SPD, CALC LOAD in the freeze frame data or MISFIRE RPM, MISFIRE LOAD in the data list. If you have no TOYOTA hand–held tester, turn the ignition switch OFF after the symptom is simulated the first time. Then repeat the simulation process again.

HINT:
In order to memorize DTC of misfire, it is necessary to drive around MISFIRE RPM, MISFIRE LOAD in the data list for the following period of time.

Engine Speed	Time
Idling	3 minutes 30 seconds or more
1000 rpm	3 minutes or more
2000 rpm	1 minute 30 seconds or more
3000 rpm	1 minute or more

(e) Check whether there is misfire or not by monitoring DTC and the freeze frame data. After that, record them.
(f) Turn ignition switch OFF and wait at least 5 seconds.

INSPECTION PROCEDURE

HINT:

- If is the case that DTC besides misfire is memorized simultaneously, first perform the troubleshooting for them.
- Read freeze frame data using TOYOTA hand–held tester or OBD II scan tool. Because freeze frame data records the engine conditions when the malfunction is detected, when troubleshooting it is useful for determining whether the vehicle was running or stopped, the engine warmed up or not, the air-fuel ratio lean or rich, etc. at the time of the malfunction.
- When the vehicle is brought to the workshop and the misfire is not occurred, misfire can be confirmed by reproducing the condition or freeze frame data. Also, after finishing the repair, confirm that there is no misfire. (See the confirmation driving pattern)
- When either of SHORT FT #1, LONG FT #1, SHORT FT #2 or LONG FT #2 in the freeze frame data is besides the range of ±20%, there is a possibility that the air-fuel ratio is inclining either to "rich" (-20% or less) or "lean" (+20% or more).
- When COOLANT TEMP in the freeze frame data is less than 80°C (176°F), there is a possibility or misfire only during warming up.
- In the case that misfire cannot be reproduced, the reason may be because of the driving with lack or fuel, the use of improper fuel, a stain of ignition plug, and etc.

1	**Check wire harness, connector and vacuum hose in engine room.**

CHECK:

(a) Check the connection conditions of wire harness and connector.
(b) Check the disconnection, piping and break of vacuum hose.

NG → **Repair or replace, then confirm that there is no misfire (See the confirmation driving pattern).**

OK

2	Check spark plug and spark of misfiring cylinder.

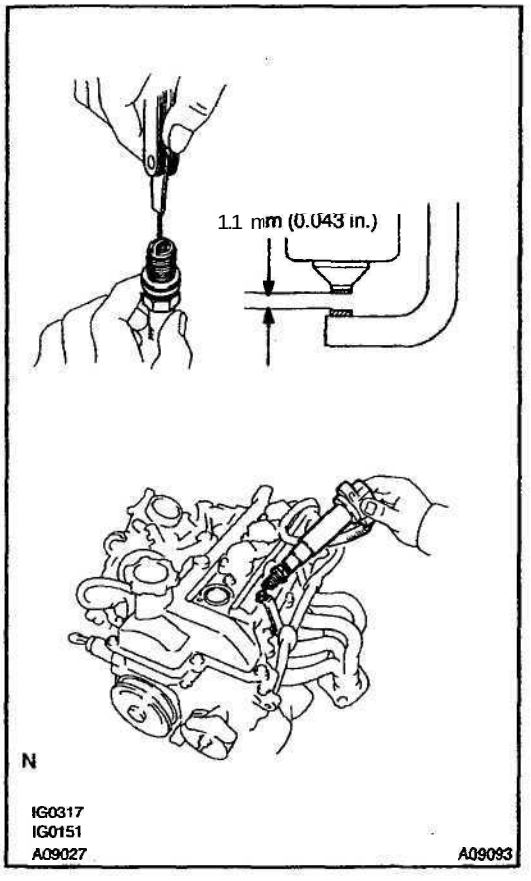

PREPARATION:
(a) Disconnect the high–tension cord.
(b) Remove the spark plug.

CHECK:
(a) Check for carbon deposits on electrode.
(b) Check electrode gap.

OK:

(b) No large carbon deposit present.
Not wet with gasoline or oil.
(c) Electrode gap: 1.1 mm (0.043 in.)

PREPARATION:
(a) Install the spark plug to the high–tension code.
(b) Disconnect the injector connector.
(c) Ground spark plug.

CHECK:
Check if spark occurs while engine is being cracked.

NOTICE:

To prevent excess fuel being injected from the injectors during this test, do'nt crank the engine for more than 5 – 10 seconds at a time.

OK:

Spark jumps across electrode gap.

NG	Replace or check ignition system (See page IG–1).

OK

3	Check voltage of ECM terminal for injector of failed cylinder.

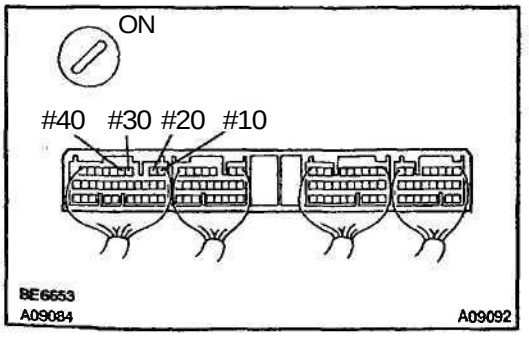

PREPARATION:
(a) Remove the ECM cover.
(b) Turn the ignition switch ON.

CHECK:
Measure voltage between applicable terminal of the ECM connector and body ground.

OK:

Voltage: 9 – 14 V

Reference: INSPECTION USING OSCILLOSCOPE
INJECTOR SIGNAL WAVEFORM
With the engine idling, measure between terminals **#10** - #40 and E01 of the ECM connector.

HINT:

The correct waveforms are shown.

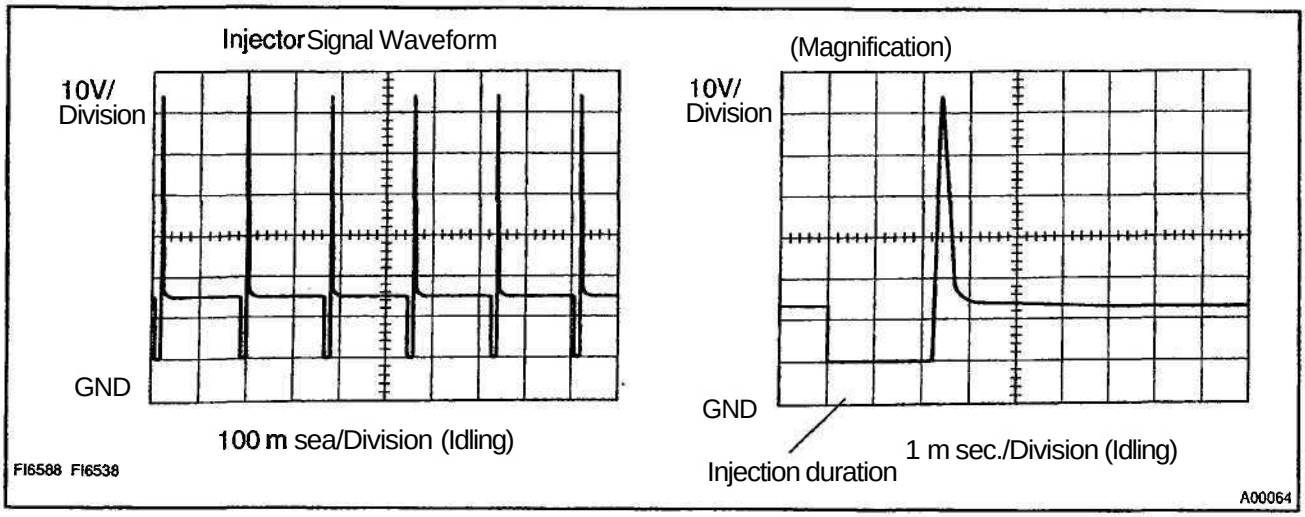

OK → Go to step 5.

NG

4	Check resistance of injector of misfiring cylinder (See page SF-18).

NG → Replace injector.

OK

Check for open and short in harness and connector between injector and ECM (See page IN–30).

5	Check fuel pressure (See page SF–6).

NG → Check and repair fuel pump, pressure regulator, fuel pipe line and filter.

OK

6	Check injector injection (See page **SF–22).**

NG → Replace injector.

OK

7	**Check mass air flow meter and engine coolant temp. sensor (See page SF–31, SF–63).**

NG → **Repair or replace.**

OK

Check compression pressure, valve clearance valve timing and locker arm (See page EM–3, EM–4, EM–22, EM–48).

DI38A-03

DTC	P0325	Knock Sensor 1 Circuit Malfunction

CIRCUIT DESCRIPTION

The knock sensor is fitted to the cylinder block to detect engine knocking. This sensor contains a piezoelectric element which generates a voltage when it becomes deformed, which occurs when the cylinder block vibrates due to knocking. If engine knocking occurs, ignition timing is retarded to suppress it.

DTC No.	DTC Detecting Condition	Trouble Area
P0325	No knock sensor 1 signal to ECM with engine speed, 2,000 rpm or more	• Open or short in knock sensor 1 circuit • Knock sensor 1 (looseness) • ECM

HINT:
If the ECM detects above diagnosis conditions, it operates the fail safe function in which the corrective retard angle value is set to the maximum value.

WIRING DIAGRAM

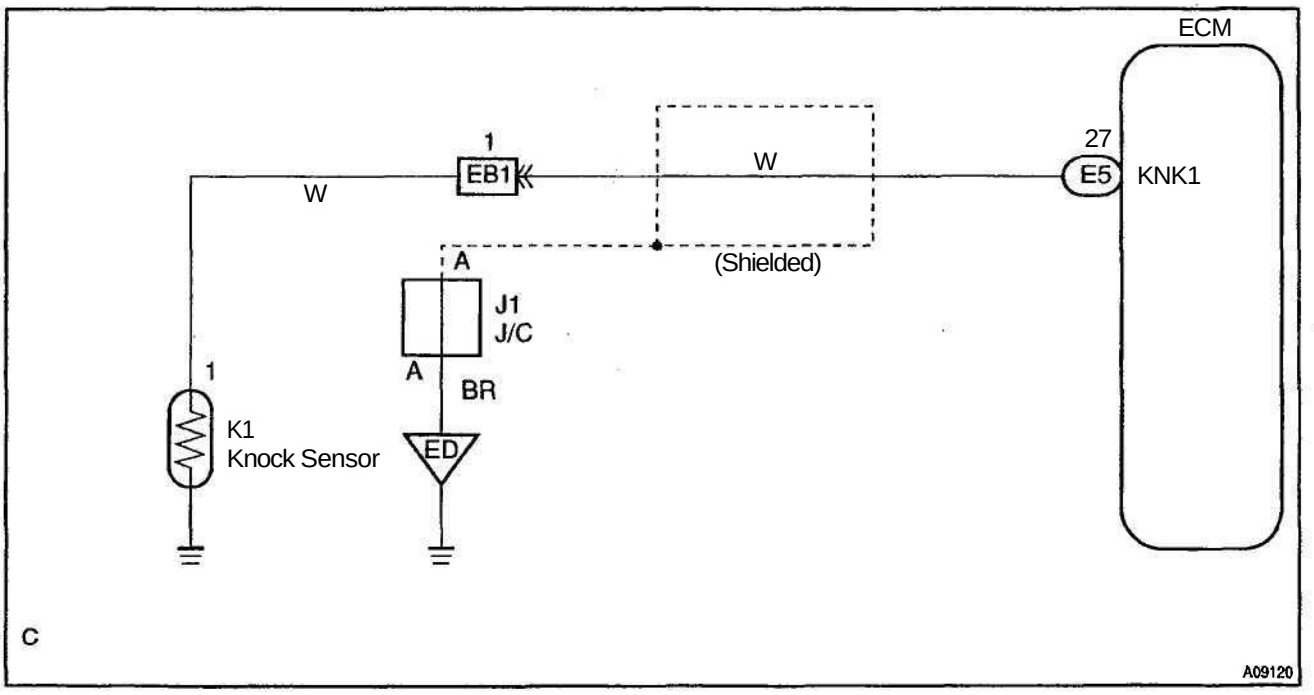

INSPECTION PROCEDURE

HINT:
Read freeze frame data using TOYOTA hand–held tester or OBD II scan tool. Because freeze frame records the engine conditions when the malfunction is detected, when troubleshooting it is useful for determining whether the vehicle was running or stopped, the engine warmed up or not, the air-fuel ratio lean or rich, etc. at the time of the malfunction.

1	Check continuity between terminal KNK of ECM connector and body ground.

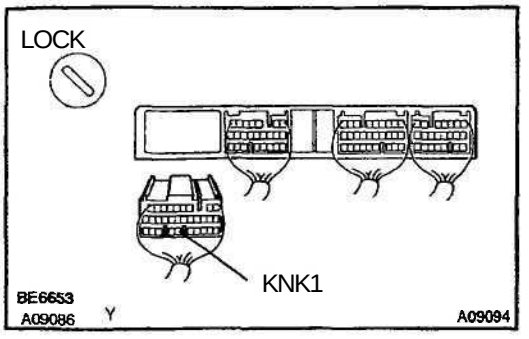

PREPARATION:

(a) Remove the ECM cover.

(b) Disconnect the E5 connector of the ECM.

CHECK:

Measure resistance between terminal KNK of the ECM connector and body ground.

OK:

Resistance: 1 MΩ or higher

OK	Go to step 3.

NG

2	Check knock sensor 1 (See page SF-68).

NG	Replace knock sensor 1.

OK

3	Check for open and short in harness and connector between ECM and knock sensor 1 (See page IN-30).

NG	Repair or replace harness or connector.

OK

4	Does malfunction disappear when a good knock sensor 1 is installed?

YES → Replace knock sensor **1.**

NO

Check and replace ECM (See page IN–30).

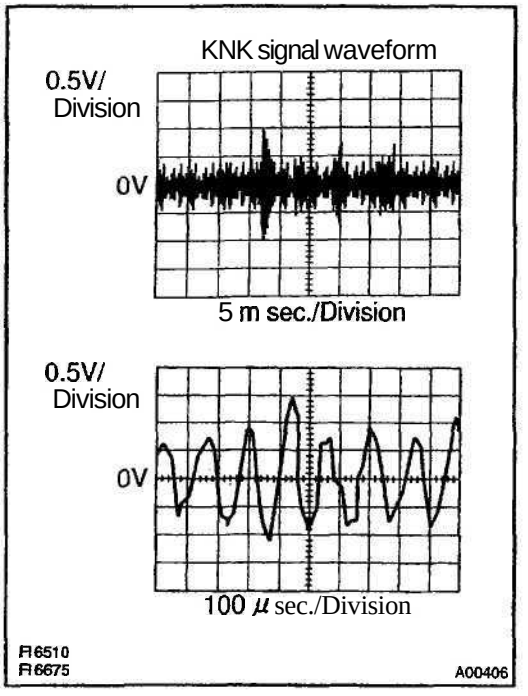

Reference: INSPECTION USING OSCILLOSCOPE

- With the engine racing (4,000 rpm) measure between terminal KNK of the ECM connector and body ground.

HINT:

The correct waveforms are as shown.

- Spread the time on the horizontal axis, and confirm that period of the wave is 80 μ sec.
  (Normal mode vibration frequency of knock sensor: 12.5 kHz (1ZZ–FE), 7.1 kHz (2ZZ–GE))

HINT:

If normal mode vibration frequency is not 7.6 kHz the sensor is malfunctioning.

DI3S8-02

DTC	P0335	Crankshaft Position Sensor "A" Circuit Malfunction

CIRCUIT DESCRIPTION

Crankshaft position sensor (NE signal) consist of a signal plate and pick up coil.
The NE signal plate has 34 teeth and is mounted on the crankshaft. The NE signal sensor generates 34 signals of every engine revolution. The ECM detects the standard crankshaft angle based on the G22 signals, and the actual crankshaft angle the engine speed by the NE signals.

DTC No.	DTC Detecting Condition	Trouble Area
P0335	No crankshaft position sensor signal to ECM during cranking. (2 trip detection logic)	• Open or short in crankshaft position sensor circuit. • Crankshaft position sensor • Signal plate (Timing belt guide) • Crankshaft timing pulley • ECM
	No crankshaft position sensor signal to ECM with engine speed 600 rpm or more (2 trip detection logic)	

WIRING DIAGRAM

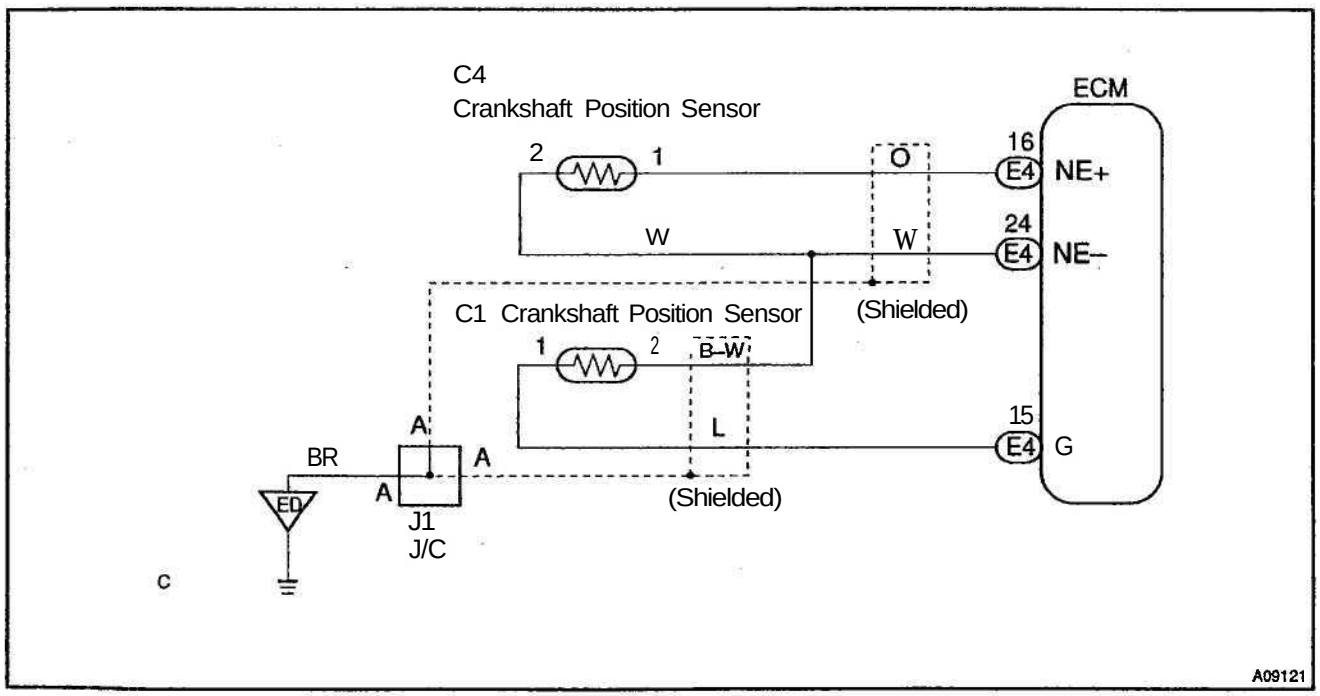

INSPECTION PROCEDURE

HINT:

- Perform troubleshooting of DTC 335 1st. If notrouble is found, troubleshoot the following mechanical system.
- Read freeze frame data using TOYOTA hand–held tester or OBD II scan tool. Because freeze frame records the engine conditions when the malfunction is detected, when troubleshooting it is useful for determining whether the vehicle was running or stopped, the engine warmed up or not, the air-fuel ratio lean or rich, etc. at the time of the malfunction.

1	**Check resistance of crankshaft position sensor (See page IG–1).**

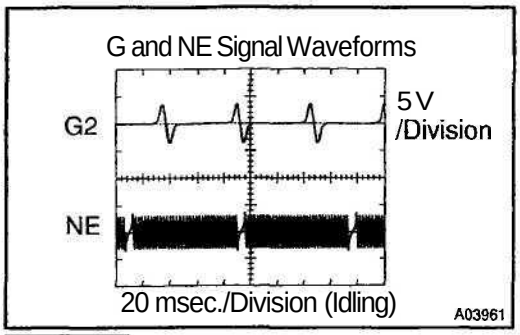

Reference: INSPECTION USING OSCILLOSCOPE

During cranking or idling, check between terminals G2 and NE-, NE and NE- of the ECM

HINT:

The correct waveforms are as shown.

NG → **Replace crankshaft position sensor.**

OK

2	**Check for open and short in harness and connector between ECM and crankshaft position sensor (See page IN–30).**

NG → **Repair or replace harness or connector.**

OK

3	**Inspect sensor installation and teeth of crankshaft timing pulley (See page IG–11, EM–15).**

NG → **Tighten the sensor. Replace crankshaft timing pulley.**

OK

Check and replace ECM (See page IN–30).

DI3D0-02

DTC	P0340	Camshaft Position Sensor Circuit Malfunction

CIRCUIT DESCRIPTION

Camshaft position sensor (G22 signal) consist of signal plate and pick up coil.
The G22 signal plate has one tooth on its outer circumference and is mounted on the exhaust camshaft.
When the camshafts rotate, the protrusion on the signal plate and the air gap on the pick up coil change, causing fluctuations in the magnetic field and generating an electromotive force in the pick up coil.
The NE signal plate has 34 teeth and is mounted on the crankshaft. The NE signal sensor generates 34 signals for every engine revolution. The ECM detects the standard crankshaft angle based on the G22 signals and the actual crankshaft angle and the engine speed by the NE signals.

DTC No.	DTC Detecting Condition	Trouble Area
P0340	No camshaft position sensor signal to ECM during cranking. (2 trip detection logic)	• Open or short in camshaft position sensor circuit • Camshaft position sensor • Camshaft timing pulley • ECM
	No camshaft position sensor signal to ECM with engine speed 600 rpm or more	

WIRING DIAGRAM

Refer to DTC P0335 (Crankshaft Position Sensor "A" Circuit Malfunction) on page DI–74 for the WIRING DIAGRAM.

INSPECTION PROCEDURE

HINT:
Read freeze frame data using TOYOTA hand–held tester or OBD II scan tool. Because freeze frame records the engine conditions when the malfunction is detected, when troubleshooting it is useful for determining whether the vehicle was running or stopped, the engine warmed up or not, the air-fuel ratio lean or rich, etc. at the time of the malfunction.

1	**Check resistance of camshaft position sensor (Signal generator) (See page IG–1).**

Reference: INSPECTION USING OSCILLOSCOPE
Refer to DTC P0335 (Crankshaft Position Sensor "A" Circuit Malfunction) on page DI-74 for the INSPECTION USING OSCILLOSCOPE.

NG → **Replace camshaft position sensor.**

OK

2	Check for open and short in harness and connector between ECM and camshaft position sensor (See page IN–30).

NG → Repair or replace harness or connector.

OK

3	Inspect sensor installation and tooth of camshaft timing pulley (See page EM–15).

NG → Tighten the sensor.
Replace camshaft timing pulley.

OK

Check and replace ECM (See page IN–30).

DI38G-03

DTC	P0420	Catalyst System Efficiency Below Threshold

CIRCUIT DESCRIPTION

The ECM compares the waveform of the oxygen sensor located before the catalyst with the waveform of the oxygen sensor located behind the catalyst to determine whether or not catalyst performance has deteriorated.
Air-fuel ratio feedback compensation keeps the waveform of the oxygen sensor before the catalyst repeatedly changing back and forth from rich to lean.
If the catalyst is functioning normally, the waveform of the oxygen sensor behind the catalyst switches back and forth between rich and lean much more slowly than the waveform of the oxygen sensor before the catalyst.
But when both waveforms change at a similar rate, it indicates that catalyst performance has deteriorated.

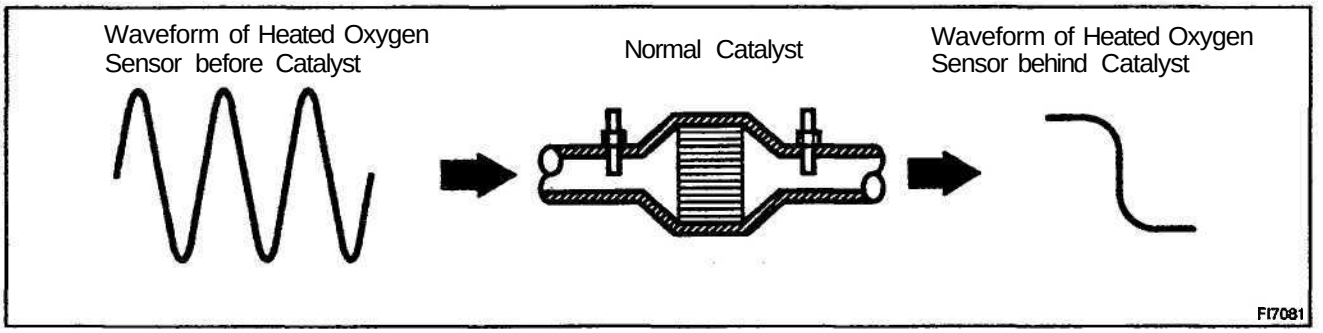

DTC No.	DTC Detecting Condition	Trouble Area
P0420	After the engine and the catalyst are warmed up, and while the vehicle is driven within the set vehicle and engine speed range, the waveforms of the oxygen sensors (bank 1 sensor 1 and bank 1 sensor 2) have the same amplitude (2 trip detection logic)	• Gas leakage on exhaust system • Open or short in heated oxygen sensor circuit • Heated oxygen sensor • Three-way catalytic converter

CONFIRMATION ENGINE RACING PATTERN

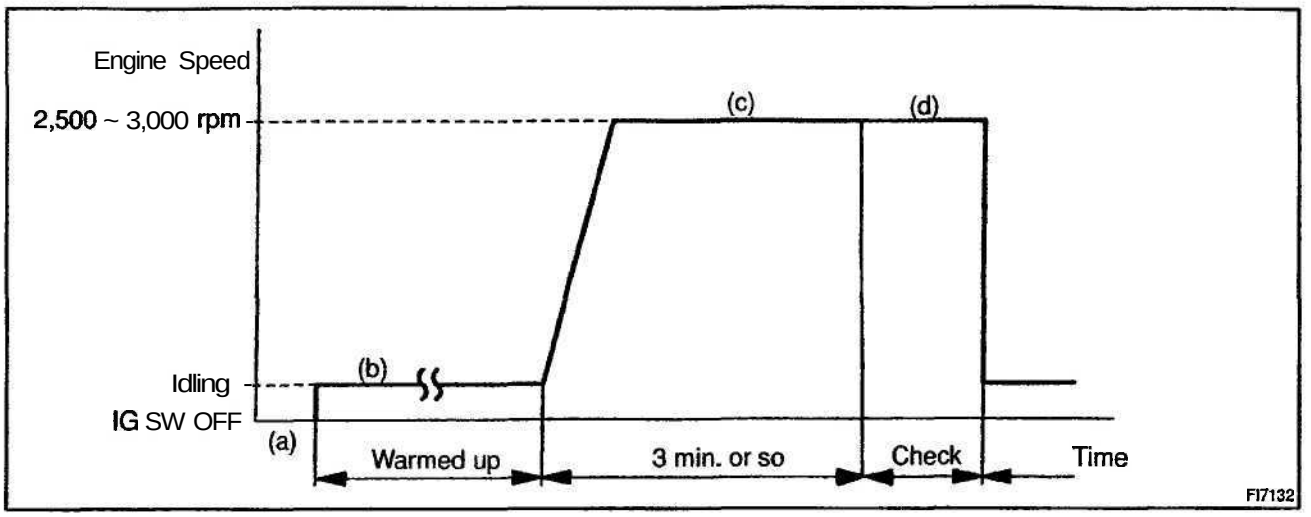

(a) Connect the TOYOTA hand–held tester to the DLC3, or connect the probe of the oscilloscope between terminals OX1, OX2 and E1 of the ECM connector.
(b) Start engine and warm it up with all accessories switched OFF until water temp. is stable.
(c) Race the engine at 2,500 - 3,000 rpm for about 3 min.
(d) After confirming that the waveforms of the oxygen sensor, bank 1 sensor 1 (OX1), oscillate around 0.5 V during feedback to the ECM, check the waveform of the oxygen sensor, bank 1 sensor 2 (OX2).

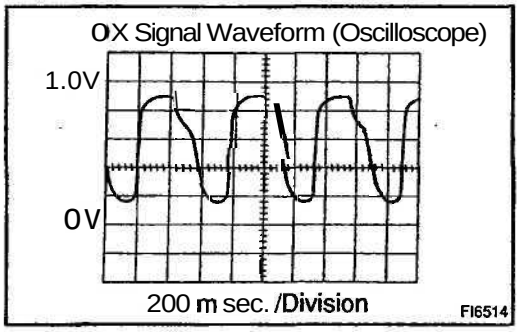

HINT:

- If there is a malfunction in the system, the waveform of the oxygen sensor, bank 1 sensor 2 (OX2), is almost the same as that of the oxygen sensor, bank 1 sensor 1 (OX1), on the left.
- There are some cases where, even though a malfunction exists, the MIL may either light up or not light up.

INSPECTION PROCEDURE

HINT:

Read freeze frame data using TOYOTA hand–held tester or OBD II scan tool. Because freeze frame records the engine conditions when the malfunction is detected, when troubleshooting it is useful for determining whether the vehicle was running or stopped, the engine warmed up or not, the air-fuel ratio lean or rich, etc. at the time of the malfunction.

1	Are there any other codes (besides DTC P0420) being output?

YES → Go to relevant DTC chart.

NO

2	Check gas leakade on exhaust system.

NG → Repair or replace.

OK

3	Check oxygen sensor (bank 1 sensor 1) (See page **DI–49**).

NG → Repair or replace.

OK

4	Check oxygen sensor (bank 1 sensor 2) (See page **DI–58**).

NG → Repair or replace.

OK

Replace three–way catalytic converter.

DTC	P0440	Evaporative Emission Control System Malfunction

CIRCUIT DESCRIPTION

The vapor pressure sensor, VSV for canister closed valve (CCV) and VSV for pressure switching valve are used to detect abnormalities in the evaporative emission control system.
The ECM decides whether there is an abnormality in the evaporative emission control system based on the vapor pressure sensor signal.
DTC P0440 or P0442 is recorded by the ECM when evaporative emissions leak from the components within the dotted line in Fig. 1 below, or when the vapor pressure sensor malfunctions.

Fig. 1

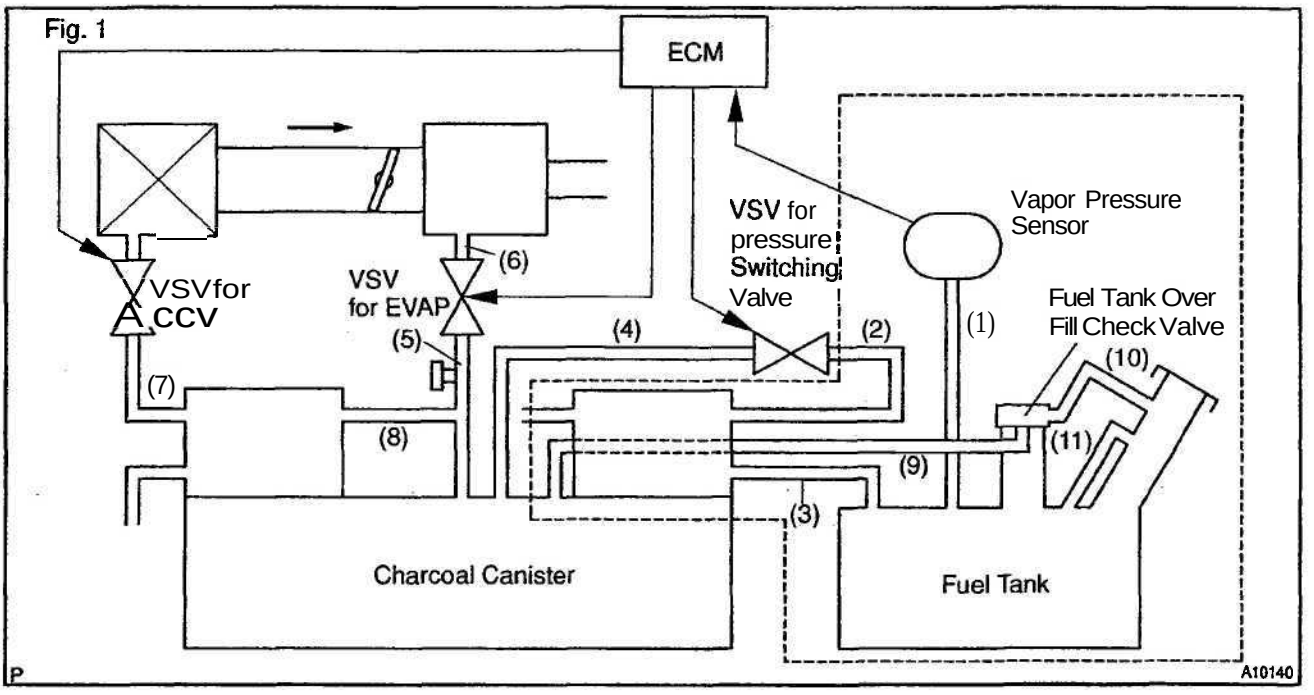

DTC No.	DTC Detecting Condition	Trouble Area
P0440	Fuel tank pressure is atmospheric pressure after vehicle is driven for 20 min. (2 trip detection logic)	• Hose or tube cracked, hole, damaged or loose seal ((3) in Fig-1) • Fuel tank cap incorrectly installed • Fuel tank cap cracked or damaged • Vacuum hose cracked, holed, blocked, damaged or disconnected ((1) or (2) in Fig. 1) • Fuel tank cracked, holed or damaged • Charcoal canister cracked, holed or damaged • Open or short in vapor pressure sensor circuit • Vapor pressure sensor • Fuel tank over fill check valve cracked or damaged • ECM

WIRING DIAGRAM

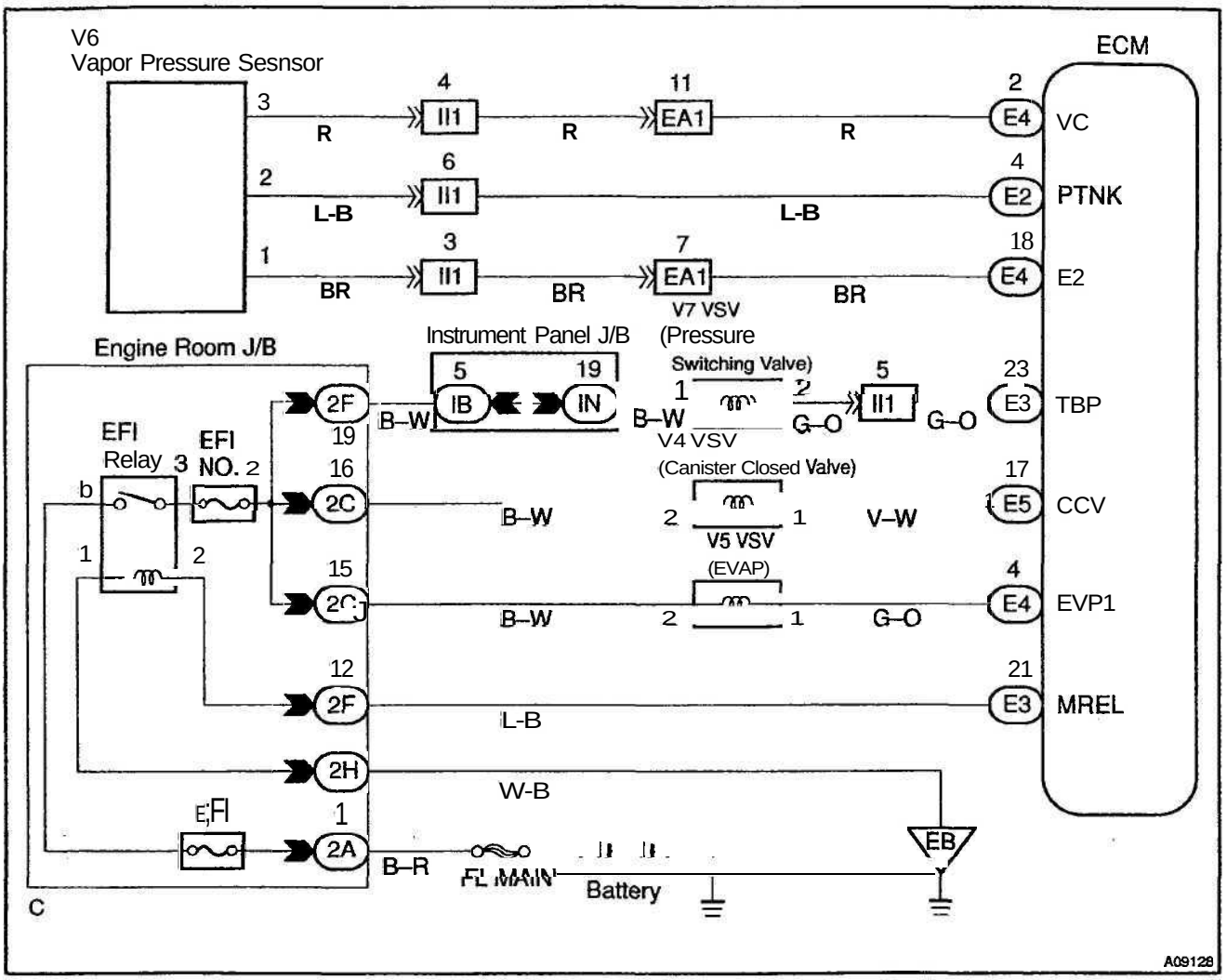

INSPECTION PROCEDURE

HINT:

- If DTC P0441, P0446, P0450 or P0451 is output after DTC P0440 or P0442, first troubleshoot DTC P0441, P0446, P0450 or P0451. If no malfunction is detected, troubleshoot DTC P0440 or P0442 next.
- Ask the customer whether, after the MIL came on, the customer found the fuel tank cap loose and tightened it. Also ask the customer whether the fuel tank cap was loose when refuelling. If the fuel tank cap was not loose, it was the cause of the DTC. If the fuel tank cap was not loose or if the customer was not sure if it was loose, troubleshoot according to the following procedure.
- Read freeze frame data using TOYOTA hand–held tester or OBD II scan tool. Because freeze frame records the engine conditions when the malfunction is detected. When troubleshooting, it is useful for determining whether the vehicle was running or stopped, the engine was warmed up or not, the air–fuel ratio was lean or rich, etc. at the time of the malfunction.
- When the ENGINE RUN TIME in the freeze frame data is less than 200 seconds, carefully check the VSV for EVAP, charcoal canister and vapor pressure sensor.

1	**Check whether hose close to fuel tank have been modified, and check whether there are signs of any accident near fuel tank or charcoal canister.**

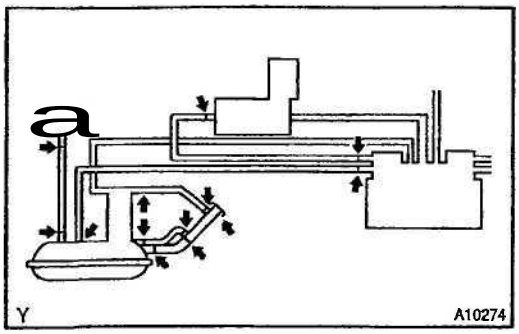

CHECK:
Check for cracks, deformation and loose connection of the following parts:

- Fuel tank
- Charcoal canister
- Fuel tank filler pipe
- Hoses and tubes around fuel tank and charcoal canister

NG → **Repair or replace.**

OK

2	Check that **fuel** tank cap is **TOYOTA** genuine parts.

NG → Replace to TOYOTA genuine parts.

OK

3	Check that fuel tank cap is correctly **installed.**

NG → Correctly install fuel tank cap.

OK

4	Check fuel tank cap (See page **EC–6).**

NG → Replace fuel tank cap.

OK

5	**Check filter neck for damage.**

PREPARATION:
Remove the fuel tank cap.
CHECK:
Visually inspect the filler neck for damage.

NG → **Replace filler pipe.**

OK →

6	**Check vacuum hoses between vapor pressure sensor and fuel tank, and charcoal canister and VSV for pressure switching valve and VSV for pressure switching valve and charcoal canister.**

CHECK:
(a) Check that the vacuum hose is connected correctly.
(b) Check the vacuum hose for looseness and disconnection.
(c) Check the vacuum hose for cracks, hole and damage.

NG → **Repair or replace.**

OK →

7	**Check hose and tube between fuel tank and charcoal canister.**

CHECK:
(a) Check for proper connection of the fuel tank and fuel evap pipe (See page EC–6), fuel evap pipe and fuel tube under the floor, fuel tube under the floor and charcoal canister.
(b) Check the hose and tube for cracks, hole and damage.

NG → **Repair or replace.**

OK →

8	Check charcoal canister for cracks, hole and damage (See page EC–6).

NG → Replace charcoal canister.

OK

9	Check voltage between terminals VC and E2 of ECM connector.

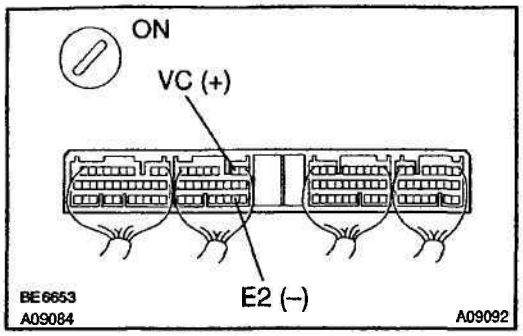

CHECK:

(a) Remove the ECM cover.

(b) Turn the ignition switch ON.

CHECK:

Measure the voltage between terminals VC and E2 of the ECM connector.

OK:

Voltage: 4.5 - 5.5 V

NG	Check and replace ECM (See page IN–30).

OK

10	Check voltage between terminals PTNK and E2 of ECM connectors.

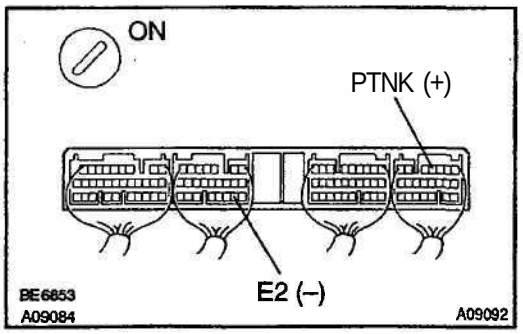

PREPARATION:

(a) Remove the ECM cover.

(b) Remove the fuel tank cap.

(c) Turn the ignition switch ON.

CHECK:

Measure the voltage between terminals PTNK and E2 of the ECM connectors.

OK:

Voltage: 3.3 V

OK	Go to step 12.

NG

11	Check for open and short in harness and connector between vapor pressure sensor and ECM (See page IN–30).

NG → Repair or replace harness or connector.

OK →

Replace vapor pressure sensor.

12	Check fuel tank and fuel tank over fill check valve for cracks and damage.

NG → Replace fuel tank or fuel tank over fill check valve.

OK →

It is likely that vehicle user did not properly close fuel tank cap. Please explain to customer how to properly install fuel tank cap.

DTC	P0441	Evaporative Emission Control System Incorrect Purge Flow

DTC	P0446	Evaporative Emission Control System Vent Control Malfunction

CIRCUIT DESCRIPTION

The vapor pressure sensor, VSV for canister closed valve (CCV), VSV for pressure switching valve are used to detect abnormalities in the evaporative emission control system.

The ECM decides whether there is an abnormality in the evaporative emission control system based on the vapor pressure sensor signal.

DTCs P0441 and P0446 are recorded by the ECM when evaporative emissions leak from the components within the dotted line in Fig. 1 below, or when there is a malfunction in either the VSV for EVAP, the VSV for pressure switching valve, or in the vapor pressure sensor itself.

Fig. 1

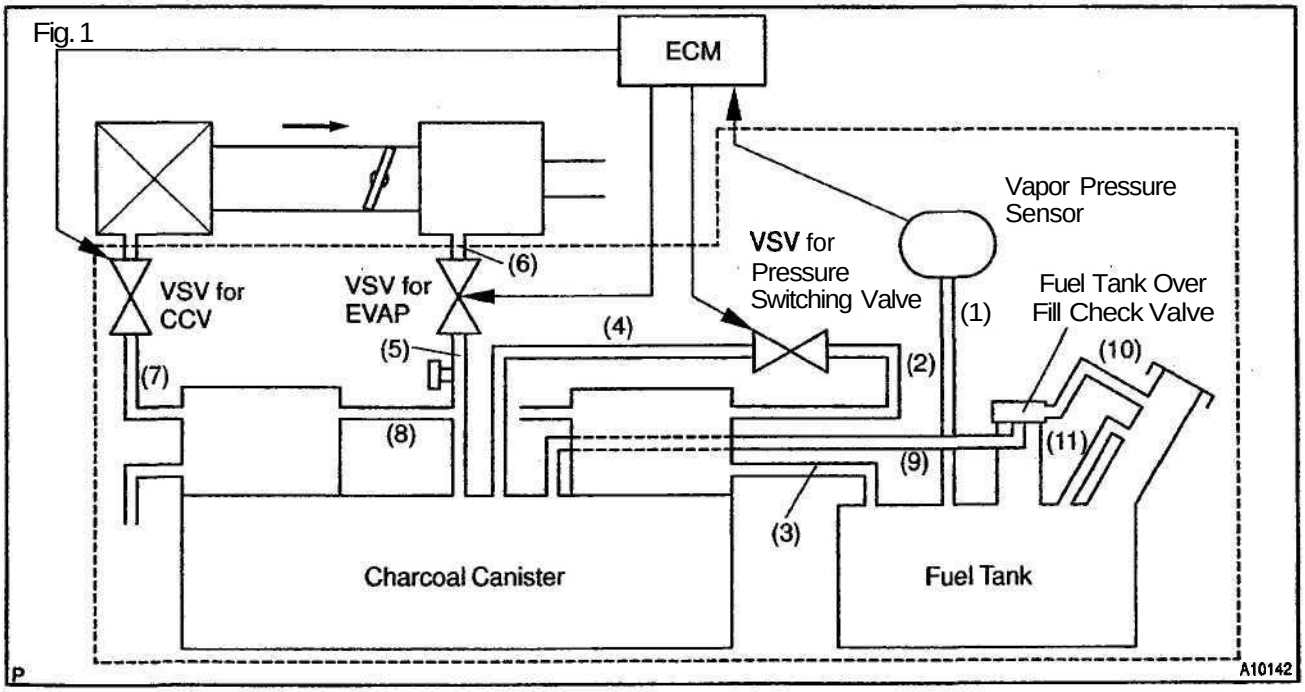

DTC No.	DTC Detecting Condition	Trouble Area
P0441	Pressure in charcoal canister does not drop during purge control (2 trip detection logic)	• Open or short in vapor pressure sensor circuit • Vapor pressure sensor • Open or short in VSV circuit for EVAP • VSV for EVAP • Open or short in VSV circuit for vapor pressure sensor • VSV for vapor pressure sensor • Charcoal canister cracked, hole or damaged • Fuel tank over fill check valve cracked or damaged • ECM
	During purge cut-off, pressure in charcoal canister is very low compared with atmospheric pressure (2 trip detection logic)	
P0446	When VSV for pressure switching valve is turned OFF, pressure in fuel tank is maintained at atmospheric pressure (2 trip detection logic)	
	When VSV for pressure switching valve is OFF, ECM judges that there is no continuity between vapor pressure sensor and fuel tank (2 trip detection logic)	
	When VSV for CCV is ON, pressure in charcoal canister and fuel tank is maintained at atmospheric pressure (2 trip detection logic)	

WIRING DIAGRAM

Refer to DTC P0440 on page DI-81.

INSPECTION PROCEDURE

HINT:

- If DTC P0441, P0446, P0450 or P0451 is output after DTC P0440,first troubleshoot DTC P0441, P0446, P0450 or P0451. If no malfunction is detected, troubleshoot DTC P0440 next.
- Read freeze frame data using TOYOTA hand-held tester or OBD II scan tool. Because freeze frame records the engine conditions when the malfunction is detected. When troubleshooting, it is useful for determining whether the vehicle was running or stopped, the engine was warmed up or not, the air-fuel ratio was lean or rich, etc. at the time of the malfunction.
- When the ENGINE RUN TIME in the freeze frame data is less than 200 seconds, carefully check the VSV for EVAP, charcoal canister and vapor pressure sensor.

TOYOTA hand-held tester:

1	Check whether hose close to fuel tank have been modified, and check whether there are signs of any accident near fuel tank or charcoal canister (See page DI-81).

NG → Repair or replace.

OK

2	Check that fuel tank cap is TOYOTA genuine parts.

NG → Replace to TOYOTA genuine parts.

OK

3	Check that fuel tank cap is correctly installed.

NG → Correctly install fuel tank cap.

OK

4	Check fuel tank cap (See page **EC–6).**

NG → Replace fuel tank cap.

OK

5	Check filler neck for damage.

NG → Replace filler pipe.

OK

6	**Check vacuum hoses between vapor pressure sensor and fuel tank, and charcoal canister and VSV for pressure switching valve and VSV for pressure switching valve and charcoal canister.**

NG → **Repair or connect VSV or sensor connector.**

OK

7	Check hose and tube between fuel tank and charcoal canister.

NG → Repair or replace.

OK

8	Check VSV connector for EVAP, VSV connector for CCV, VSV connector for pressure switching valve and vapor pressure sensor connector for looseness and disconnection.

NG → Repair or connect VSV or sensor connector.

OK

9	Check vacuum hoses ((8), (9), (10) and (11) in Fig. 1 in circuit description).

CHECK:

(a) Check that the vacuum hose is connected correctly.
(b) Check the vacuum hose for looseness and disconnection.
(c) Check the vacuum hose for cracks, hole, damage and blockage.

NG → Repair or replace.

OK

10	Check voltage between terminals VC and E2 of ECM connector (See page DI–81).

NG → Check and replace ECM (See page IN–30).

OK

11	Check voltage between terminals PTNK and E2 of ECM connectors (See page DI–81).

OK → Go to step 13.

NG

12	**Check for open and short in harness and connector between vapor pressure sensor and ECM (See page IN–30).**

NG → **Repair or replace harness or connector.**

OK

Replace vapor pressure sensor.

13	**Check purge flow.**

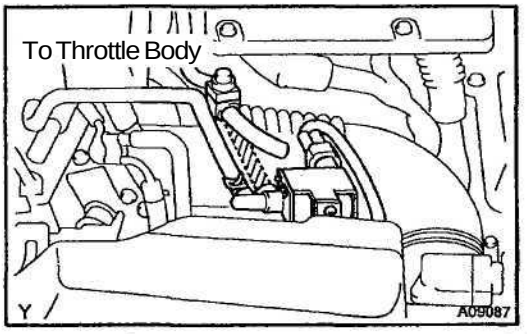

PREPARATION:

(a) Connect the TOYOTA hand–held tester to the DLC3.
(b) Select the ACTIVE TEST mode on the TOYOTA hand–held tester.
(c) Disconnect the vacuum hose from the VSV for the EVAP from the charcoal canister.
(d) Start the engine.

CHECK:

When the VSV for the EVAP is operated by the TOYOTA hand–held tester, check whether the disconnected hose applies suction to your finger.

OK:

VSV is ON:
Disconnected hose applies suction to your finger.
VSV is OFF:
Disconnected hose applies no suction to your finger.

OK → **Go to step 16.**

NG

14	**Check vacuum hose between intake manifold and VSV for EVAP, and VSV for EVAP and charcoal canister.**

CHECK:

(a) Check that the vacuum hose is connected correctly.
(b) Check the vacuum hose for looseness and disconnection.
(c) Check the vacuum hose for cracks, hole, damage and blockage.

NG → **Repair or replace.**

OK

15	Check operation of VSV for EVAP (See page **SF–57).**

OK → Go to step **16.**

NG

Replace VSV and charcoal canister,and then clean the vacuum hose between throttle body and VSV for EVAP, and VSV for EVAP and charcoal canister.

16	**Check for open and short in harness and connector between EFI main relay (Marking: EFI) and VSV for EVAP, and VSV for EVAP and ECM (See page IN–30).**

NG → **Repair or replace harness or connector.**

OK

Check and replace ECM (See page IN–30).

17	Check VSV for CCV.

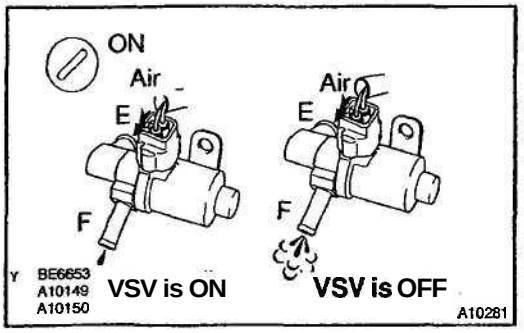

PREPARATION:
(a) Connect the TOYOTA hand–held tester to the DLC3.
(b) Diconnect the vacuum hose for the VSV for the CCV from the charcoal canister.
(c) Turn the ignition switch ON and push the TOYOTA hand–held tester main switch ON.
(d) Select the ACTIVE TEST mode on the TOYOTA hand–held tester.

CHECK:
Check the VSV operation when it is operated by the TOYOTA hand–held tester.

OK:
VSV is ON:
Air does not flow from port E to port F.
VSV is OFF:
Air from port E flows out through port F.

OK	Go to step 21.

NG

18	Check vacuum hose between VSV for CCV and charcoal canister.

CHECK:
(a) Check that the vacuum hose is connected correctly.
(b) Check the vacuum hose for looseness and disconnection.
(c) Check the vacuum hose for cracks, hole damage and blockage.

NG	Repair or replace.

OK

19	Check operation of VSV for CCV.

OK	Go to step 20.

NG

Replace VSV and charcoal canister, and then clean vacuum hose between charcoal canister and VSV for CCV.

20	Check for open and short in harness and connector between EFI main relay (Marking: EFI) and VSV for CCV, and VSV for CCV and ECM (See page IN–30).

NG → Repair or replace harness or connector.

OK →

Check and replace ECM (See page IN–30).

21	Check VSV for pressure switching valve.

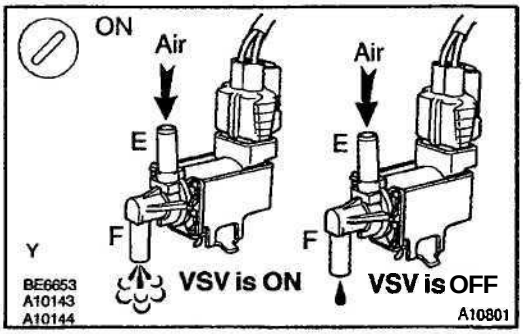

PREPARATION:

(a) Connect the TOYOTA hand–held tester to the DLC3.
(b) Turn the ignition switch ON and push the TOYOTA hand–held tester main switch ON.
(c) Select the ACTIVE TEST mode on the TOYOTA hand–held tester.

CHECK:

Check the VSV operation when it is operated by the TOYOTA hand–held tester.

OK:

VSV is ON:
Air from port E flows out through port F.
VSV is OFF:
Air does not flow from port E to port F.

OK → Go to step 24.

NG →

22	Check operation of VSV for pressure switching valve (See page SF–61).

OK → Go to step 23.

NG

Replace VSV and charcoal canister, and then clean vacuum hose between charcoal canister and VSV for pressure switching valve, and VSV for pressure switching valve and fuel tank.

23	**Check for open and short in harness and connector between EFI main relay (Marking: EFI) and VSV for pressure switching valve, and VSV for pressure switching valve and ECM (See page IN–30).**

NG → **Repair or replace harness or connector.**

OK

Check and replace ECM (See page IN–30).

24	**Check fuel tank.**

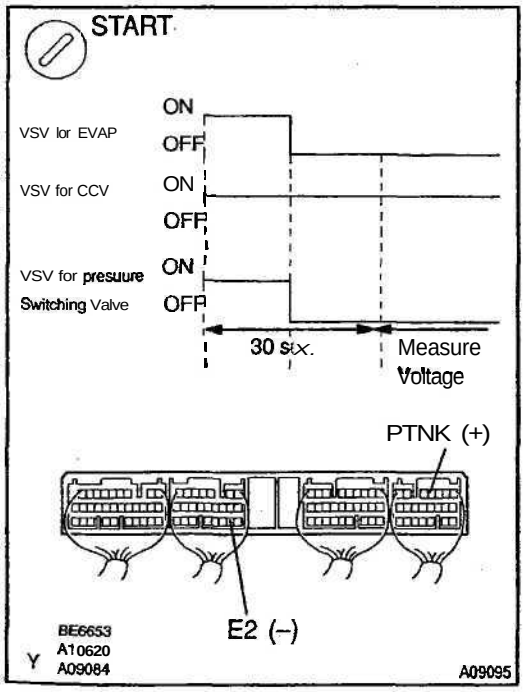

PREPARATION:

(a) Remove the ECM cover.
(b) Connect the TOYOTA hand–held tester to the DLC3.
(c) Select the ACTIVE TEST mode on the TOYOTA hand–held tester.
(d) Start the engine.
(e) The VSV for the CCV is ON by the TOYOTA hand–held tester.
(f) The VSV for the EVAP is OFF, and the VSV for the pressure switching valve is ON by the TOYOTA hand–held tester and remains on for 30 sec.

CHECK:

Measure the voltage between terminals PTNK and E2 of the ECM connectors after switching the VSV for the EVAP from OFF to ON, and the VSV for the pressure switching valve from ON to OFF.

OK:

Voltage: 2.5 V or less

NG → **Replace fuel tank.**

OK

25	Check charcoal canister.

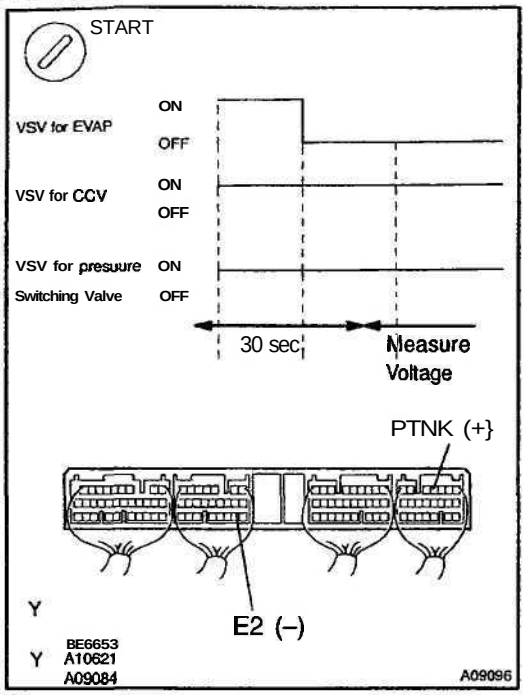

PREPARATION:

(a) Remove the ECM cover.
(b) Connect the TOYOTA hand–held tester to the DLC3.
(c) Select the ACTIVE TEST mode on the TOYOTA hand–held tester.
(d) Start the engine.
(e) The VSV for the CCV and the VSV for the pressure switching valve are ON by the TOYOTA hand–held tester.
(f) The VSV for the EVAP is OFF by the TOYOTA hand–held tester and remains on for 30 sec.

CHECK:

Measure the voltage between terminals PTNK and E2 of the ECM connectors after switching the VSV for the EVAP from OFF to ON.

OK:

Voltage: 2.5 V or less

NG → **Replace charcoal canister.**

OK

26	Remove chacoal canister and check it (See page **EC–6).**

NG → Replace charcoal canister.

OK

27	**Check fuel tank over fill check valve (See page EC–6).**

NG → **Replace fuel tank over fill check valve or fuel tank.**

OK

Check and replace ECM (See page IN–30).

OBD II scan tool (excluding TOYOTA hand-held tester):

1	**Check whether hose close to fuel tank have been modified, and check whether there are signs of any accident near fuel tank or charcoal canister.**

NG → **Repair or replace.**

OK

2	Check that fuel tank cap is TOYOTA genuine parts.

NG → Replace to TOYOTA genuine parts.

OK

3	Check that fuel tank cap is correctly installed.

NG → Correctly install fuel tank cap.

OK

4	Check fuel tank cap (See page **EC–6).**

NG → Replace fuel tank cap.

OK

5	Check filler neck for damage.

NG → Replace filler pipe.

OK

6	Check VSV connector for EVAP, VSV connector for CCV, VSV connector for pressure switching valve and vapor pressure sensor connector for looseness and disconnection.

NG → Repair or connect VSV or sensor connector.

OK

7	Check vacuum hoses ((8), (9) , (10) and (11) in Fig. 1 in circuit description).

CHECK:

(a) Check that the vacuum hose is connected correctly.
(b) Check the vacuum hose for looseness and disconnection.
(c) Check the vacuum hose for cracks, hole damage and blockage.

NG → Repair or replace.

OK

8	Check voltage between terminals VC and E2 of ECM connector (See page DI–81).

NG → Check and replace ECM (See page IN–30).

OK

9	Check voltage between terminals PTNK and E2 of ECM connectors (See page DI–81).

OK → Go to step 11.

NG

10	**Check for open and short in harness and connector between vapor pressure sensor and ECM (See page IN–30).**

NG → **Repair or replace harness or connector.**

OK

Replace vapor pressure sensor.

11	**Check VSV for EVAP.**

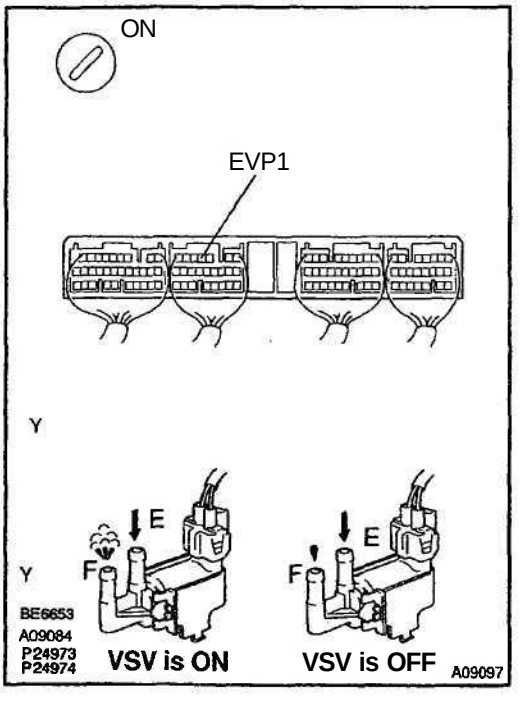

PREPARATION:

(a) Remove the ECM cover.

(b) Turn the ignition switch ON.

CHECK:

Check VSV function.

(1) Connect between terminal EVP1 of the ECM connector and body ground (VSV ON).

(2) Disconnect between terminal EVP1 of the ECM connector and body ground (VSV OFF).

OK:

(1) VSV is ON:
Air from port E fows out through port F.
(2) VSV is OFF:
Air does not flow from port E to port F.

OK → **Go to step 14.**

NG

12	Check operation of VSV for EVAP (See page **SF–57).**

NG → Go to step 13.

NG

Replace VSV and clean vacuum hoses between throttle body and VSV for EVAP, and VSV for EVAP and charcoal canister, and then check charcoal canister.

13	**Check for open and short in harness and connector between EFI main relay (Marking: EFI) and VSV for EVAP, and VSV for EVAP and ECM (See page IN–30)**

NG → **Repair or replace harness or connector.**

OK

Check and replace ECM (See page IN–30).

14	Check VSV for CCV.

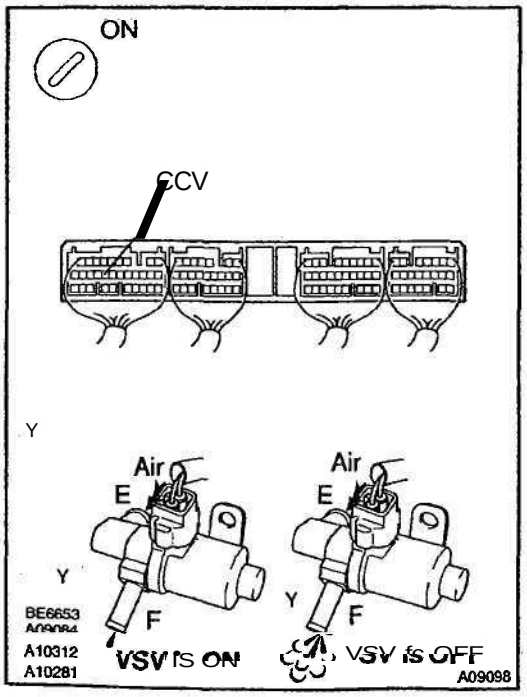

PREPARATION:
(a) Remove the ECM cover.
(b) Turn the ignition switch ON.

CHECK:
Check the VSV function.
(1) Connect between terminal CCV of the ECM connector and body ground (VSV ON).
(2) Disconnect between terminal CCV of the ECM connector and body ground (VSV OFF).

OK:
VSV is ON:
Air does not flow from port E to port F.
VSV is OFF:
Air from port E flows out through port F.

OK → Go to step **17.**

NG

15	Check operation of VSV for CCV (See page **SF-59**).

OK → Go to step 16.

NG

Replace VSV and charcoal canister, and then clean vacuum hoses between charcoal canister and VSV for CCV.

16	**Check for open and short in harness and connector between EFI main relay (Marking: EFI) and VSV for CCV, and VSV for CCV and ECM (See page IN-30).**

NG → Repair or replace harness or connector.

OK

Check and replace ECM (See page IN-30).

17	Check VSV for pressure switching valve.

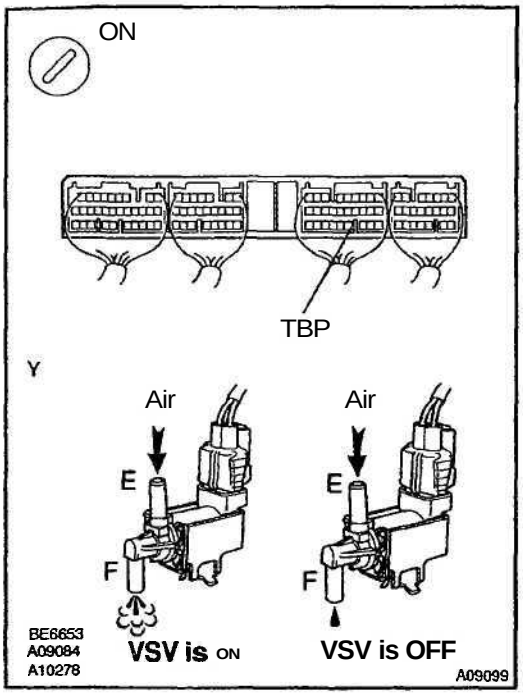

PREPARATION:

(a) Remove the ECM cover.

(b) Turn the ignition switch ON.

CHECK:

Check the VSV function.

(1) Connect between terminal TBP of the ECM connector and body ground (VSV ON).

(2) Disconnect between terminal TBP of the ECM connector and body ground (VSV OFF).

OK:

(1) VSV is ON:
Air from port E flows out through port F.
(2) VSV is OFF:
Air does not flow from port E to port F.

OK	Go to step 20.

NG

18	Check operation of VSV for pressure switching valve (See page SF–61).

OK	Go to step 19.

NG

Replace VSV and charcoal canister, and then clean vacuum hoses between charcoal canister and VSV for pressure switching valve, and VSV for pressure switching valve and fuel tank.

19	Check for open and short in harness and connector between EFI main relay (Marking: EFI) and VSV for pressure switching valve, and VSV for pressure switching valve and ECM (See page IN–30).

NG → Repair or replace harness or connector.

OK ↓

Check and replace ECM (See page IN–30).

20	Check fuel tank over fill check valve (See page EC–6).

NG → Replace fuel tank over fill check valve or fuel tank.

OK ↓

Check and replace charcoal canister (See page EC–6).

DTC	P0450	Evaporative Emission Control System Pressure Sensor Malfunction

DTC	P0451	Evaporative Emission Control System Pressure Sensor Range/Performance

CIRCUIT DESCRIPTION

The vapor pressure sensor, VSV for canister closed valve (CCV) and VSV for pressure switching valve are used to detect abnormalities in the evaporative emission control system.
The ECM decides whether there is an abnormality in the evaporative emission control system based on the vapor pressure sensor signal.
DTC P0450 or P0451 is recorded by the ECM when the vapor pressure sensor malfunction.

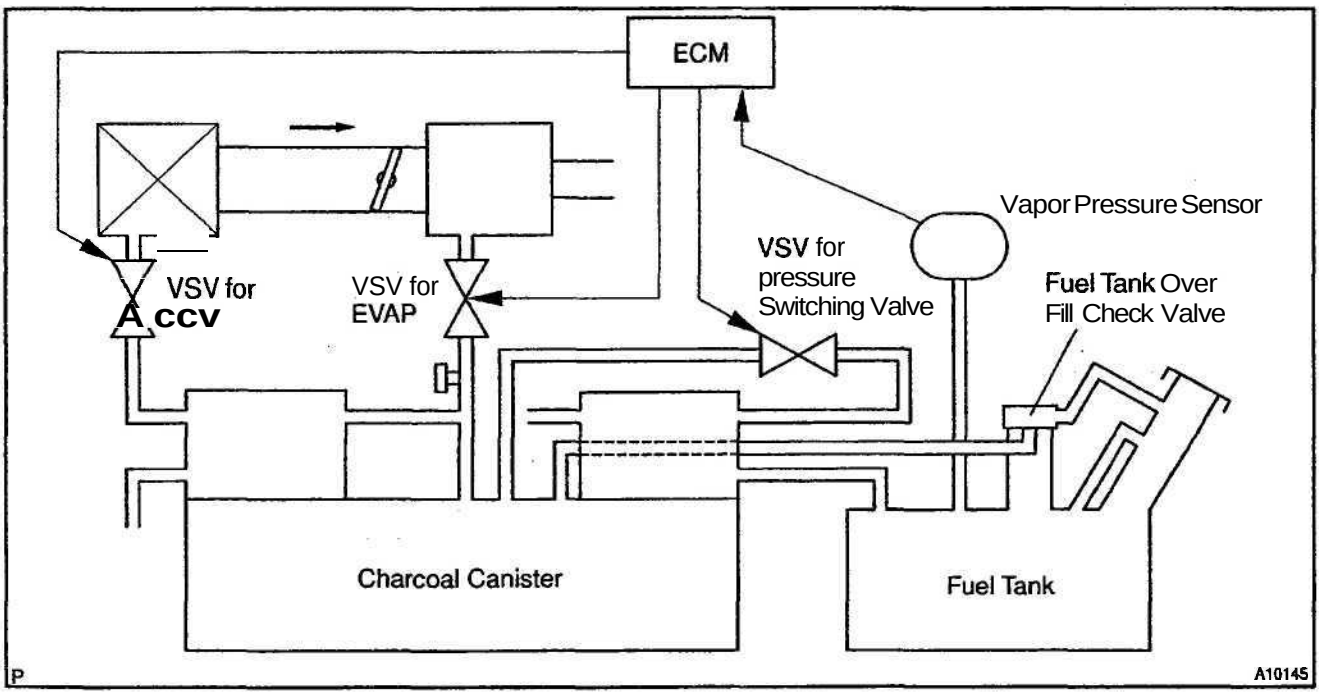

DTC No.	DTC Detecting Condition	Trouble Area
P0450	10 seconds or less after engine starting condition (a) or (b) continues for 7 seconds or more: (2 trip detection logic) (a) Vapor pressure sensor value < –4.0 kPa (–30 mmHg, –1 .2 in.Hg) (b) Vapor pressure sensor value £ 2.0 kPa (15 mmHg, 0.6 in.Hg)	• Open or short in vapor pressure sensor circuit • Vapor pressure sensor • ECM
P0451	Vapor pressure sensor output extremely changes under conditions of (a) or (b): (2 trip detection logic) (a) Vehicle speed: 0 km/h (0mph), Engine speed: Idling and VSV for pressure switching valve is OFF (b) High vaver pressure senser	

WIRING DIAGRAM

Refer to DTC P0440 on page DI–81.

INSPECTION PROCEDURE

HINT:

- If DTC P0441, P0446, P0450 or P0451 is output after DTC P0440, first trouble shoot DTC P0441, P0446 P0450 or P0451. If no malfunction is detected, troubleshoot DTC P0440 next.
- Read freeze frame data using TOYOTA hand–held tester or OBD II scan tool. Because freeze frame records the engine conditions when the malfunction is detected. When troubleshooting, it is useful for determining whether the vehicle was running or stopped, the engine was warmed up or not, the air-fuel ratio was lean or rich, etc. at the time of the malfunction.
- When the ENGINE RUN TIME in the freeze frame data is less than 200 seconds, carefully check the VSV for EVAP, charcoal canister and vapor pressure sensor.

1	Check voltage between terminals VC and E2 of ECM connector (See page DI–81).

NG → Check and replace ECM (See page IN–30).

OK

2	Check voltage between terminals PTNK and E2 of ECM connectors (See page DI–81).

OK → Check and replace ECM (See page IN–30).

NG

3	Check for open and short in harness and connector between vapor pressure sensor and ECM (See page IN–30).

NG → Repair or replace harness or connector.

OK

Replace vapor pressure sensor.

DI38H-02

DTC	P0500	Vehicle Speed Sensor Malfunction

CIRCUIT DESCRIPTION

The No.1 vehicle speed sensor outputs a 4-pulse signal for every revolution of the rotor shaft, which is rotated by the transmission output shaft via the driven gear. After this signal is converted into a more precise rectangular waveform by the waveform shaping circuit inside the combination meter, it is then transmitted to the ECM. The ECM determines the vehicle speed based on the frequency of these pluse signals.

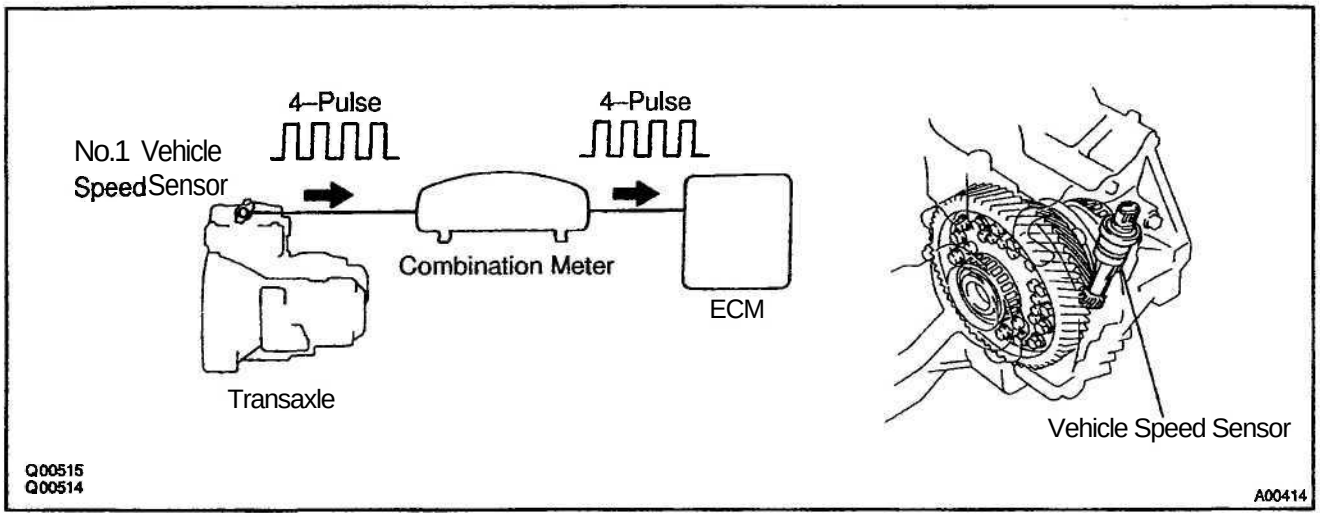

DTC No.	DTC Detecting Condition	Trouble Area
P0500	During vehicle is being driven, no vehicle speed sensor signal to ECM (2 trip detection logic)	• Combination meter • Open or short in vehicle speed sensor circuit • Vehicle speed sensor • ECM

WIRING DIAGRAM

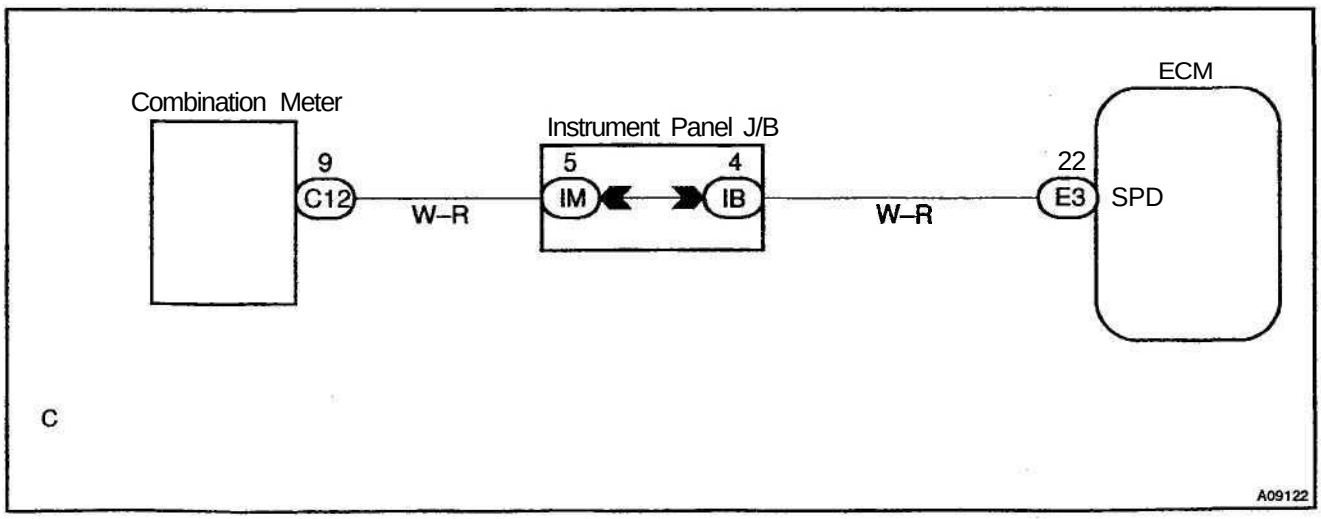

INSPECTION PROCEDURE

HINT:
Read freeze frame data using TOYOTA hand–held tester or OBD II scan tool. Because freeze frame records the engine conditions when the malfunction is detected, when troubleshooting it is useful for determining whether the vehicle was running or stopped, the engine warmed up or not, the air-fuel ratio lean or rich, etc. at the time of the malfunction.

1	**Check operation of speedometer.**

CHECK:
Drive the vehicle and check if the operation of the speedmeter in the combination meter is normal.
HINT:
The vehicle speed sensor is operating normally if the speedometer display is normal.

NG → **Check speedometer circuit. See combination meter troubleshooting (See page BE-2).**

OK

2	Check voltage between terminal SPD of ECM connector and body ground.

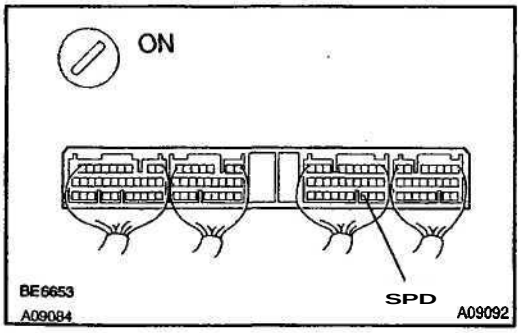

PREPARATION:
(a) Remove the ECM cover.
(b) Shift the shift lever to neutral.
(c) Jack up one of the front wheels.
(d) Turn the ignition switch ON.

CHECK:
Measure voltage between terminal SPD of ECM connector and body ground when the wheel is turned slowly.

OK:
Voltage is generated intermittently.

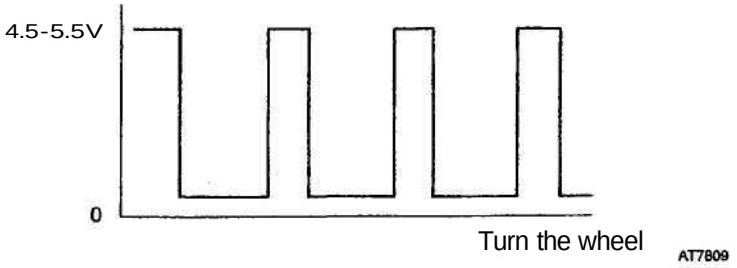

NG → Check and repair harness and connector between combination meter and ECM.

OK

Check and replace ECM (See page IN-30).

D3S1-04

DTC	P0505	Idle Control System Malfunction

CIRCUIT DESCRIPTION

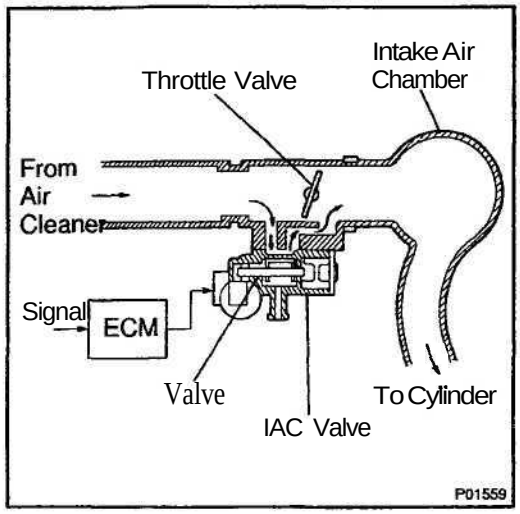

The rotary solenoid type IAC valve is located on the throttle body and intake air bypassing the throttle valve is directed to the IAC valve through a passage.
In this way the intake air volume bypassing the throttle valve is regulated, controlling the engine speed.
The ECM operates only the IAC valve to perform idle-up and provide feedback for the target idling speed.

DTC No.	DTC Detecting Condition	Trouble Area
P0505	Idle speed continues to vary greatly from the target speed (2 trip detection logic)	• IAC valve is stuck or closed • Open or short in IAC valve circuit • Open or short in A/C switch circuit • Air induction system • ECM

WIRING DIAGRAM

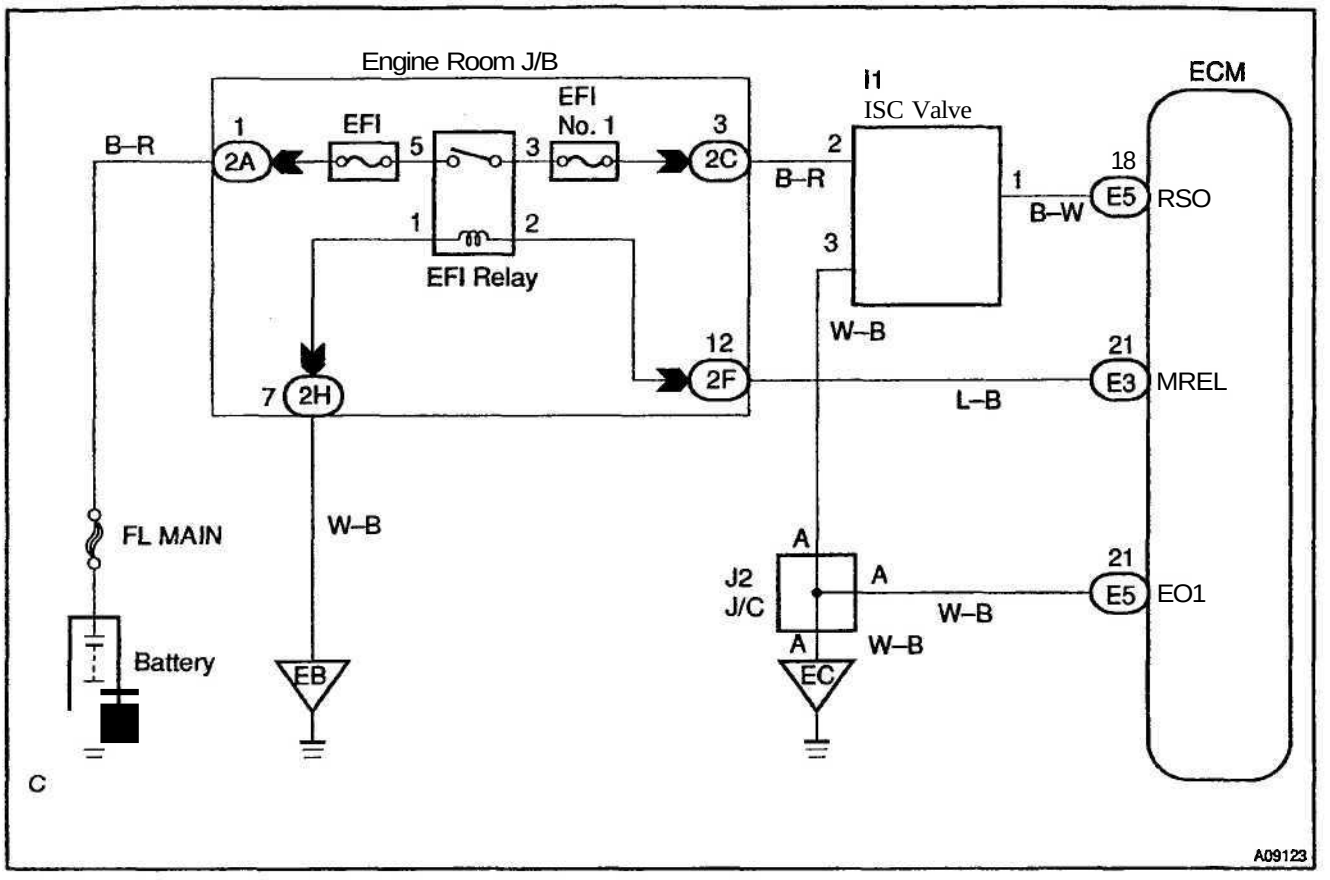

INSPECTION PROCEDURE

HINT:

Read freeze frame data using TOYOTA hand–held tester or OBD II scan tool. Because freeze frame records the engine conditions when the malfunction is detected, when troubleshooting it is useful for determining whether the vehicle was running or stopped, the engine warmed up or not, the air–fuel ratio lean or rich, etc. at the time of the malfunction.

1	**Check engine idle speed.**

PREPARATION:

(a) Warm up engine to normal operating temperature.
(b) Switch off all accessories.
(c) Switch off airconditioning.
(d) Shift transmission into "N" or neutral position.
(e) Connect the OBD II scan tool or TOYOTA hand–held tester to DLC3 on the vehicle.
(f) Using SST, connect terminals TE1 and E1 of the DLC1.

CHECK:

Check the difference of engine speed between the ones less than 5 sec. and more than 5 sec. after connecting terminals TE1 and E1 of the DLC1.

OK:

Difference of engine speed: More than 100 rpm.

OK → **Go to step 6.**

NG

2	**Check voltage between terminals RSO, RSC of ECM connector and body ground.**

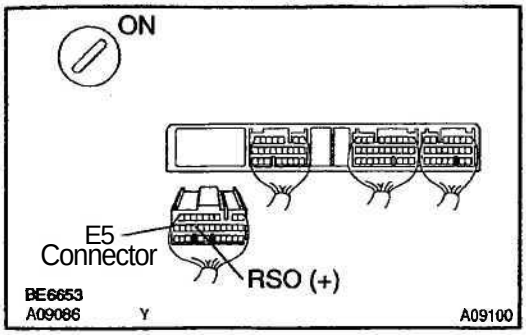

PREPARATION:
(a) Remove the ECM cover.
(b) Disconnect the E5 connector of ECM.
(c) Turn the ignition switch ON.

CHECK:
Measure voltage between terminals RSO of the ECM connector and body ground,

OK:
Voltage: 9 – 14 V

OK → **Go to step 4.**

NG

3	**Check IAC valve (See page SF–40).**

NG → **Replace IAC valve.**

OK

Check for open and short in harness and connector between engine room J/B No.2 and IAC valve and ECM (See page IN–30).

4	Check operation of the IAC valve (See page **SF–40).**

NG → Repair or replace IAC valve.

OK

5	Check the blockage of IAC valve and the passage to bypass the throttle valve.

NG → Repair or replace iAC **valve.**

OK →

Check and replace ECM (See page IN–30).

6	Check for **A/C** signal circuit (See page **AC–68).**

NG → Repair or replace.

OK →

Check air induction system (See page SF–1).

DI3HD-05

DTC	P1300	Igniter Circuit Malfunction (No.1)

DTC	P1305	Igniter Circuit Malfunction (No.2)

DTC	P1310	Igniter Circuit Malfunction (No.3)

DTC	P1315	Igniter Circuit Malfunction (No.4)

CIRCUIT DESCRIPTION

A DIS (Direct Ignition System) has been adopted. The DIS improves the ignition timing accuracy, reduces high–voltage loss, and enhances the the overall reliability of the ignition system by eliminating the distributor. The DIS is a 1–cylinder ignition system which ignites one cylinder with one ignition coil. In the 1–cylinder ignition system, the one spark plug is connected to the end of the secondary winding. High voltage generated in the secondary winding is applied directly to the spark plug. The spark of the spark plug pass from the center elecrtode to the ground electrode.

The ECM determines ignition timing and outputs the ignition signals (IGT) for each cylinder. Based on IGT signals, the power transistors in the igniter cuts off the current to the primary coil in the ignition coil is supplied to the spark plug that are connected to the end of the secondary coil. At the same time, the igniter also sends an ignition confirmation signal (IGF) as a fail–safe measure to the ECM.

DTC No.	DTC Detecting Condition	Trouble Area
P1300 P1305 P1310 P1315	No IGF signal to ECM while engine is running	• Ignition system • Open or short in IGF1 and IGT1 - 4 circuit from ignition coil with igniter • No.1 ~ No.4 ignition coil with igniter • ECM

WIRING DIAGRAM

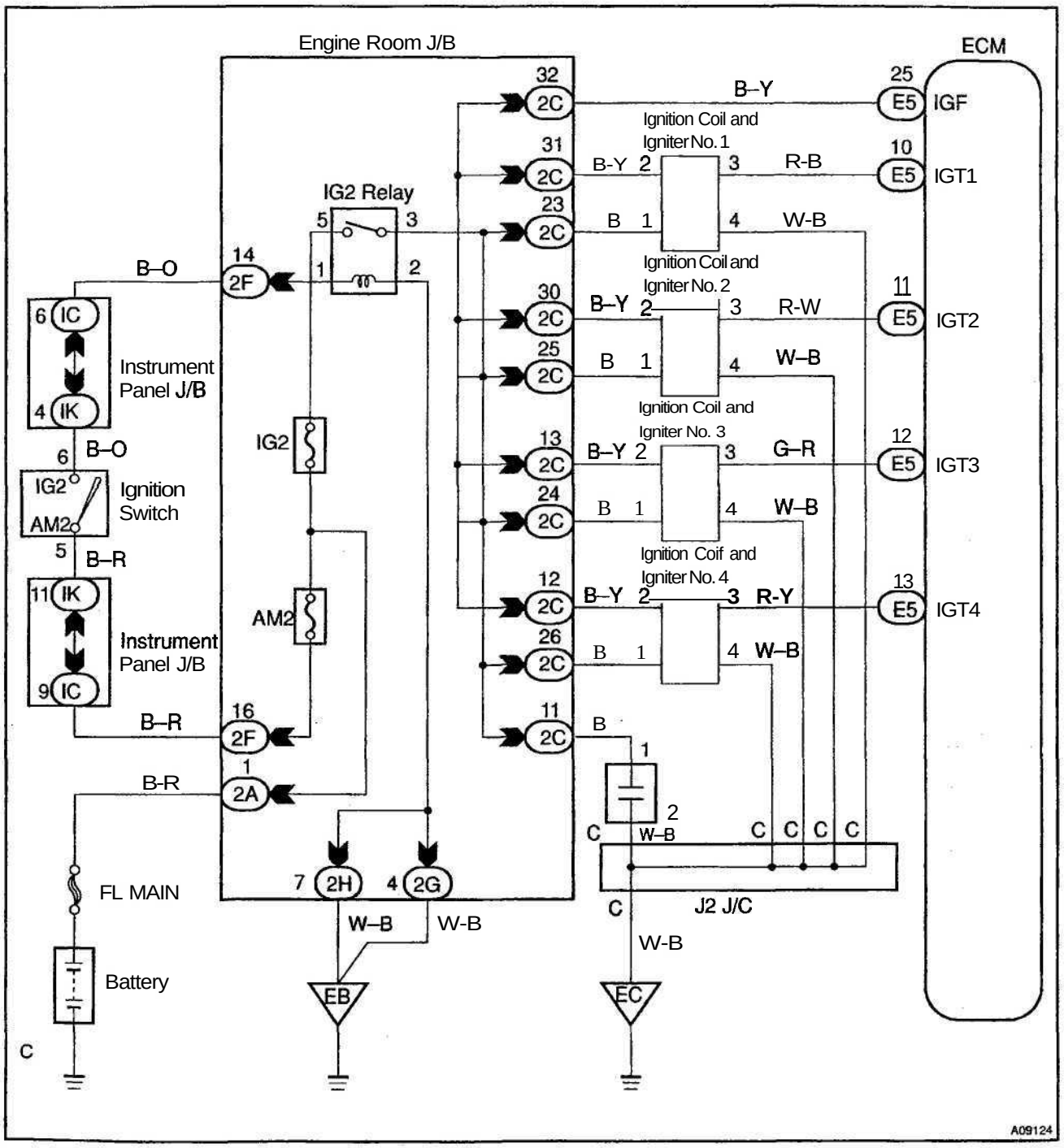

INSPECTION PROCEDURE

HINT:

- If DTC P1300 is displayed, check No.1 ignition coil with igniter circuit.
- If DTC P1305 is displayed, check No.2 ignition coil with igniter circuit.
- If DTC P1310 is displayed, check No.3 ignition coil with igniter circuit.
- If DTC P1315 is displayed, check No.4 ignition coil with igniter circuit.
- Read freeze frame data using TOYOTA hand–held tester or OBD II scan tool. Because freeze frame records the engine conditions when the malfunction is detected, when troubleshooting it is useful for determining whether the vehicle was running or stopped, the engine warmed up or not, the air-fuel ratio lean or rich, etc. at the time of the malfunction.

1	Check spark plug and spark (See page **DI–64**).

NG → Go to step 4.

OK

2	**Check for open and short in harness and connector in IGF and IGT signal circuit between ECM and ignition coil with igniter (See page IN–30).**

NG → **Repair or replace harness or connector.**

OK

3	**Disconnect ignition coil with igniter connector and check voltage between terminals IGF of ECM connector and body ground.**

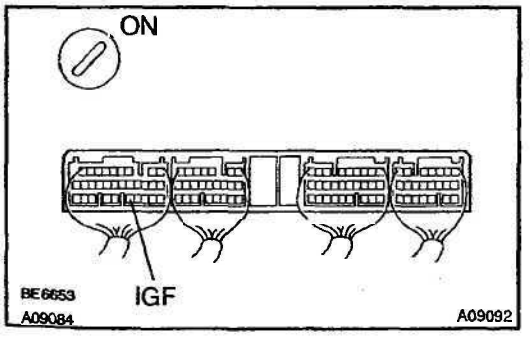

PREPARATION:

(a) Remove the ECM cover.
(b) Disconnect the ignition coil with igniter connector.
(c) Turn the ignition switch ON.

CHECK:

Measure voltage between terminals IGF of the ECM connector and body ground.

OK:

Voltage: 4.5 - 5.5 V

OK → **Replace ignition coil with igniter.**

NG

Check and replace ECM (See page IN–30).

4	Check for open and short in harness and connector in IGT signal circuit between ECM and ignition coil with igniter (See page IN–30).

NG → Repair or replace harness or connector.

OK

5	Check voltage between terminals IGT1 ~ 4 of ECM connector and body ground.

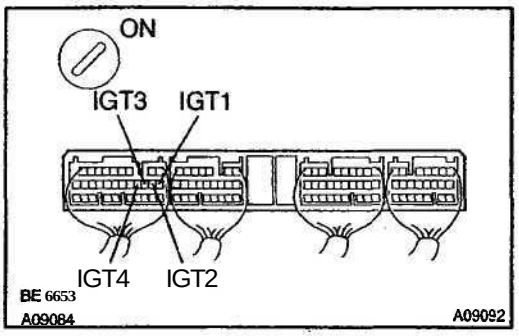

PREPARATION:
Remove the ECM cover.
CHECK:
Measure voltage between terminals IGT1 - 4 of the ECM connector and body ground when engine is cranked.
OK:
Voltage: More than 0.1 V and less than 4.5 V

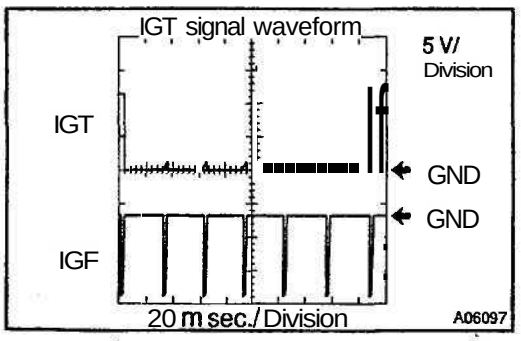

Reference: INSPECTION USING OSCILLOSCOPE
During cranking or idling, check waveform between terminals IGT1 - 4 and E1 of the ECM connector.
HINT:
Correct waveform appears as sohwn, with rectangle waves.

NG → Check and replace ECM (See page IN–30).

OK

6	Disconnect ignition coil with igniter connector and check voltage between terminals IGT1 - 4 of ECM connector and body ground.

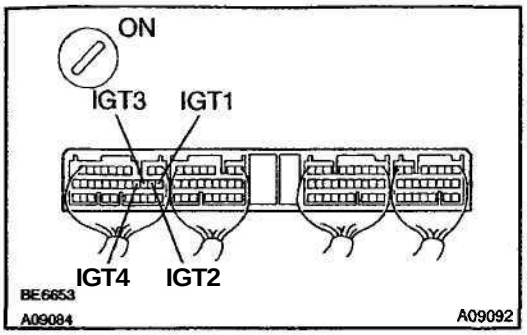

PREPARATION:
(a) Remove the ECM cover.
(b) Disconnect the ignition coil with igniter connector.

CHECK:
Measure voltage between terminals IGT1 - 4 of the ECM connector and body ground when engine is cranked.

OK:
Voltage: More than 0.1 V and less than 4.5 V

NG	Check and replace ECM (See page IN-30).

OK

7	Check ignition coil with igniter power source circuit.

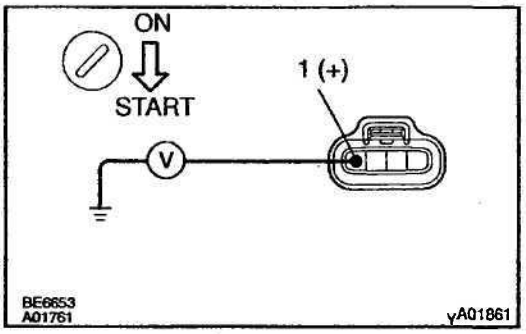

PREPARATION:
Disconnect the ignition coil with igniter connector.

CHECK:
Measure voltage between terminal 1 of ignition coil with igniter connector and body ground, when ignition switch is turned to "ON" and "START" position.

OK:
Voltage: 9 – 14 V

NG	Repair ignition coil with igniter power source circuit.

OK

8	Check for open and short in harness and connector between ignition switch and ignition coil with igniter (See page IN-30).

NG	Repair or replace harness or connector.

OK

9	Check EFI main relay (Marking: EFI) (See page SF-52).

NG → Replace EFI main relay (marking: EFI).

OK →

Replace ignition coil with igniter.

DTC	P1335	Crankshaft Position Sensor Circuit Malfunction (During engine running)

CIRCUIT DESCRIPTION

Refer to DTC P0335 (Crankshaft Position "A" Circuit Malfunction) on page DI-74.

DTC No.	DTC Detecting Condition	Trouble Area
P1335	If conditions (a) through (c) are met: (a) NE a 1,000 rpm (b) NE signal is not detected for over 50 m sec. (c) Not during cranking	• Open or short in crankshaft position sensor circuit • Crankshaft position sensor • Signal plate • ECM

WIRING DIAGRAM

Refer to DTC P0335 on page DI-74.

INSPECTION PROCEDURE

Refer to DTC P0335 on page DI-74.

DTC	P1346	VVT Sensor (Camshaft Position Sensor) Circuit Range/Performance Problem

CIRCUIT DESCRIPTION

VVT sensor (VV1 or W2 signal) consist of a signal plate and pickup coil.
The W1 or W2 signal plate has 1 tooth on its outer circumference and is mounted on the intake camshafts. When the camshafts rotate, the protrusion on the signal plate and the air gap on the pickup coil change, causing fluctuations in the magnetic field and generating an electromotive force in the pickup coil.
The actual camshaft angle is detected by the WT sensor and it provides feedback to the ECM to control the intake valve timing in response to during condition.

DTC No.	Detection Item	Trouble Area
P1346	Deviation in crankshaft position sensor signal and WT sensor (bank 1) signal (2 trip detection logic)	• Mechanical system malfunction (Skipping teeth of timing belt, belt stretched) • ECM

WIRING DIAGRAM

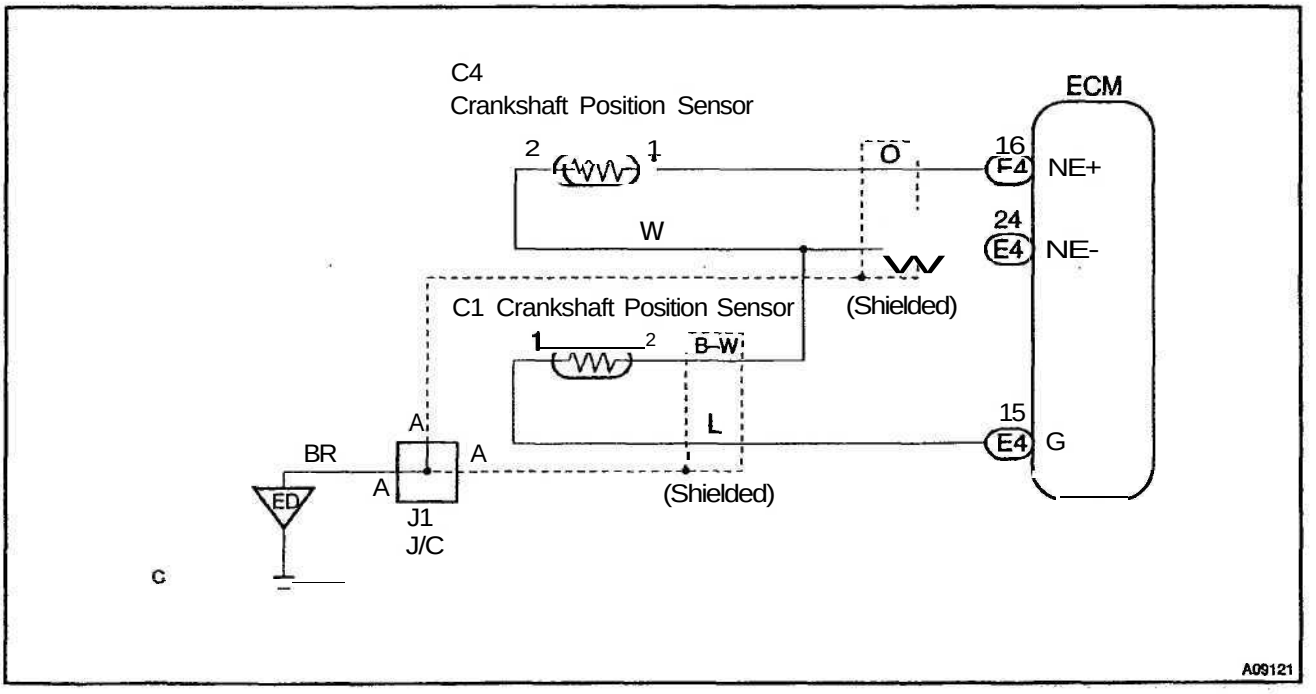

INSPECTION PROCEDURE

HINT:

Read freeze frame data using TOYOTA hand–held tester or OBD II scan tool. Because freeze frame records the engine conditions when the malfunction is detected, when troubleshooting it is useful for determining whether the vehicle was running or stopped, the engine warmed up or not, the air-fuel ratio lean or rich, etc. at the time of the malfunction.

1	**Check valve timing (Check for loose and jumping teeth of timing belt) (See page EM–18).**

NG → **Adjust valve timing (Repair or replace timing belt).**

OK

Check and replace ECM (See page IN–30).

DTC	P1349	VVT System Malfunction

CIRCUIT DESCRIPTION

WT system controls the intake valve timing to proper timing in response to driving condition.
ECM controls OCV (Oil Control Valve) to make the intake valve timing properly, and, oil pressure controlled with OCV is supplied to the WT controller, and then, WT controller changes relative position between the camshaft and the crankshaft.

DTC No.	DTC Detecting Condition	Trouble Area
P1349	Condition (a) or (b) continues for after the engine is warmed up and engine speed at 400 - 4,000 rpm : (a) Valve timing does not change from of current valve timing (b) Current valve timing is fixed.	• Valve timing • Oil control valve • WT controller assembly • ECM

WIRING DIAGRAM

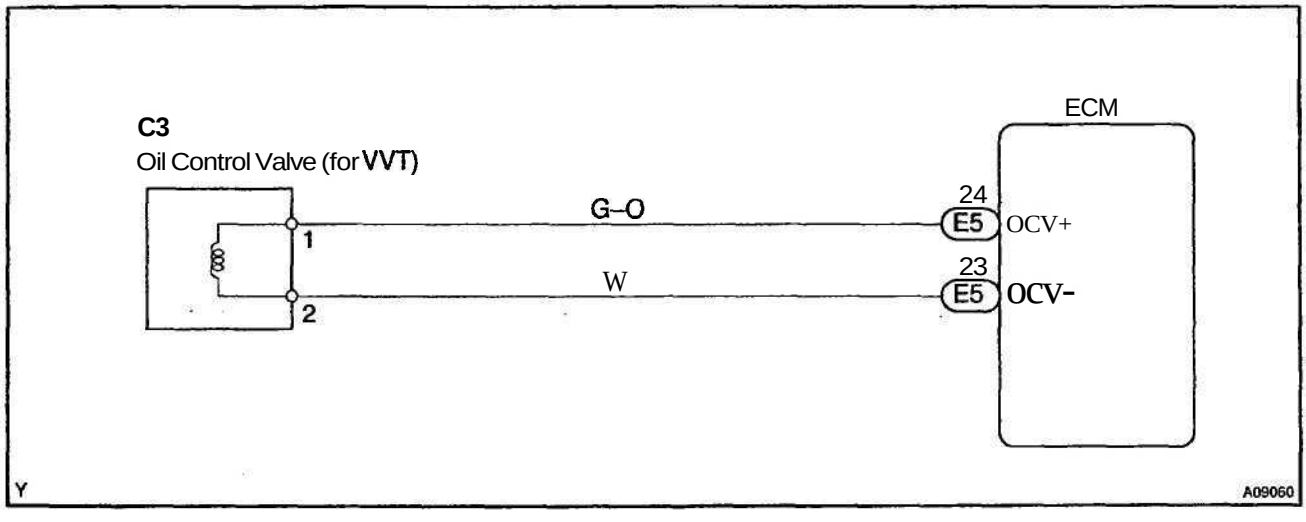

INSPECTIONPROCEDURE

HINT:

- If DTC P1349 is displayed, check left bank VVT system circuit.
- Read freeze frame data using TOYOTA hand–held tester or OBD II scan tool. Because freeze frame records the engine conditions when the malfunction is detected, when troubleshooting it is useful for determining whether the vehicle was running or stopped, the engine warmed up or not, the air–fuel ratio lean or rich, etc. at the time of the malfunction.

TOYOTA hand–heldtester

1	Check valve timing (See page EM–18).

NG → Repair valve timing.

OK

2	**Check operation of OCV.**

PREPARATION:

(a) Start the engine and warmed it up.

(b) Connect the TOYOTA hand–held tester and select VVT from ACTIVE TEST menu.

CHECK:

Check the engine speed when operate the OCV by the TOYOTA hand–held tester.

OK:

OCV is OFF:
Normal engine speed
OCV is ON:
Rough idle or engine stall

OK → **VVT system is OK.***

*: DTC P1349 is also output after the foreign object is caught in some part of the system in the engine oil and the system returns to normal in a short time. As ECM controls so that foreign objects are ejected, there is no problem about WT. There is also no problem since the oil filter should get the foreign object in the engine oil.

NG

3	**Check voltage between terminals OCV+ and OCV- of ECM connector.**

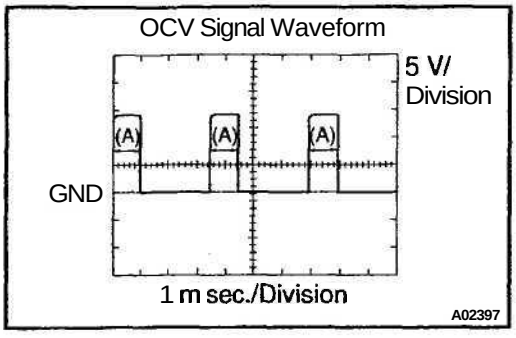

Reference: INSPECTION USING OSCILLOSCOPE
Turn the ignition switch ON, check waveform between terminals OCV+ and OCV- of the ECM connector.
HINT:
- The correct waveform is as shown.
- The waveform frequency (A) is lengthened as the engine speed becomes higher.

NG → **Check and replace ECM (See page IN–30).**

OK ↓

4	**Check VVT controller assembly (See page EM–48).**

NG → **Replace VVT controller assembly, and then go to step 5.**

OK ↓

5	Check oil control valve (See page **SF–50).**

NG → Replace oil control valve, and then go to step 6.

OK ↓

6	Check blockage of oil control valve, oil check valve and oil pipe **No.1.**

NG → Repair or replace.

OK ↓

7	**Check whether or not DTC P1349 is stored.**

PREPARATION:

(a) Clear the DTC (See page DI-3).
(b) Perform simulation test.

CHECK:

Check whether or not DTC P1349/P1354 is stored (See page DI-3).

OK:

DTC P1349 is not stored

OK → **VVT system is OK.***

*: DTC P1349 is also output after the foreign object is caught in some part of the system in the engine oil and the system returns to normal in a short time. As ECM controls so that foreign objects are ejected, there is no problem about VVT. There is also no problem since the oil filter should get the foreign object in the engine oil.

NG

Replace ECM.

OBD II scan tool (excluding TOYOTA hand-held tester)

1	Check valve timing (See page **EM-18).**

NG → Repair valve timing.

OK

2	Check operation of OCV.

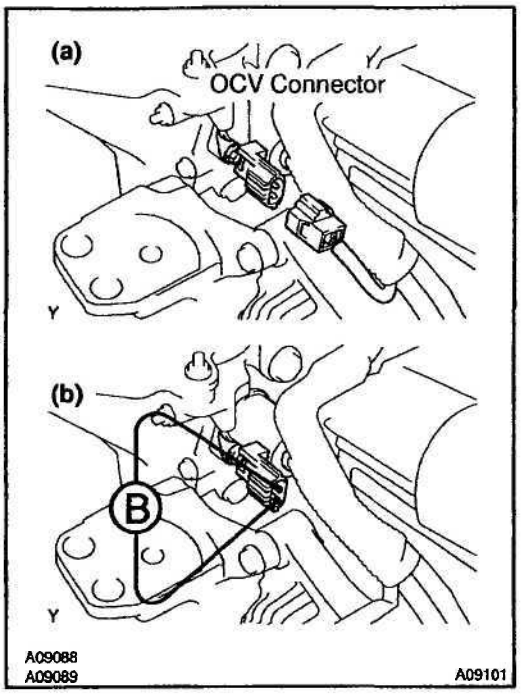

PREPARATION:
Start the engine.

CHECK:
(a) Check the engine speed when disconnect the OCV connector.
(b) Check the engine speed when apply battery positive voltage between terminals of OCV.

RESULT:

Result	Check (a)	Check (b)
1	Normal engine speed	Rough idle or engine stall
2	Except 1	

2	Go to step 4.

1

3	Check voltage between terminals OCV+ and OCV- of ECM connector.

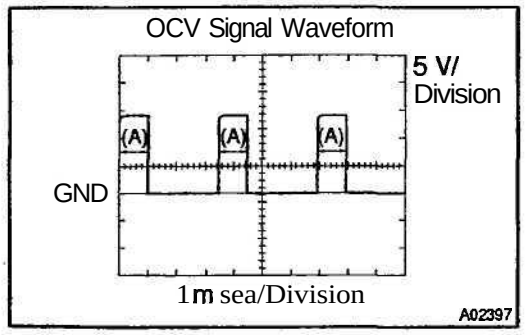

Reference: INSPECTION USING OSCILLOSCOPE
Turn the ignition switch ON, check waveform between terminals OCV+ and OCV- of the ECM connector.
HINT:
- The correct waveform is as shown.
- The waveform frequency (A) is lengthened as the engine speed becomes higher.

OK	VVT system is OK.*

*: DTC P1349 is also output after the foreign object is caught in some part of the system in the engine oil and the system returns to normal in a short time. As ECM controls so that foreign objects are ejected, there is no problem about WT. There is also no problem since the oil filter should get the foreign object in the engine oil.

NG

	Check and replace ECM (See page IN–30).

4	Check VVT controller assembly (See page EM–48).

NG → Replace VVT controller assembly, and then go to step 5.

OK

5	Check oil control valve (See page SF–50).

NG → Replace oil control valve, and then go to step 6.

OK

6	Check blockage of oil control valve, oil check valve and oil pipe No.1.

NG → Repair or replace.

OK

7	Check whether or not DTC P1349 is stored.

PREPARATION:

(a) Clear the DTC (See page DI–3).

(b) Perform simulation test.

CHECK:

Check whether or not DTC P1349/P1354 is stored (See page DI–3).

OK:

DTC P1349 is not stored

OK → VVT system is OK.*

*: DTC P1349 is also output after the foreign object is caught in some part of the system in the engine oil and the system returns to normal in a short time. As ECM controls so that foreign objects are ejected, there is no problem about VVT. There is also no problem since the oil filter should get the foreign object in the engine oil.

NG

Replace ECM.

DI38M-04

DTC	P1520	Stop Light Switch Signal Malfunction (Only for A/T)

CIRCUIT DESCRIPTION

This signal is used to detect when the brakes have been applied. The STP signal voltage is the same as the voltage supplied to the stop lights.
The STP signal is used mainly to control the fuel cut–off engine speed. (The fuel cut–off engine speed is reduced slightly when the vehicle is braking.)

DTC No.	DTC Detecting Condition	Trouble Area
P1520	The stop light switch does not turn off even once the vehicle is driven (2 trip detection logic)	• Short in stop light switch signal circuit • Stop light switch •ECM

WIRING DIAGRAM

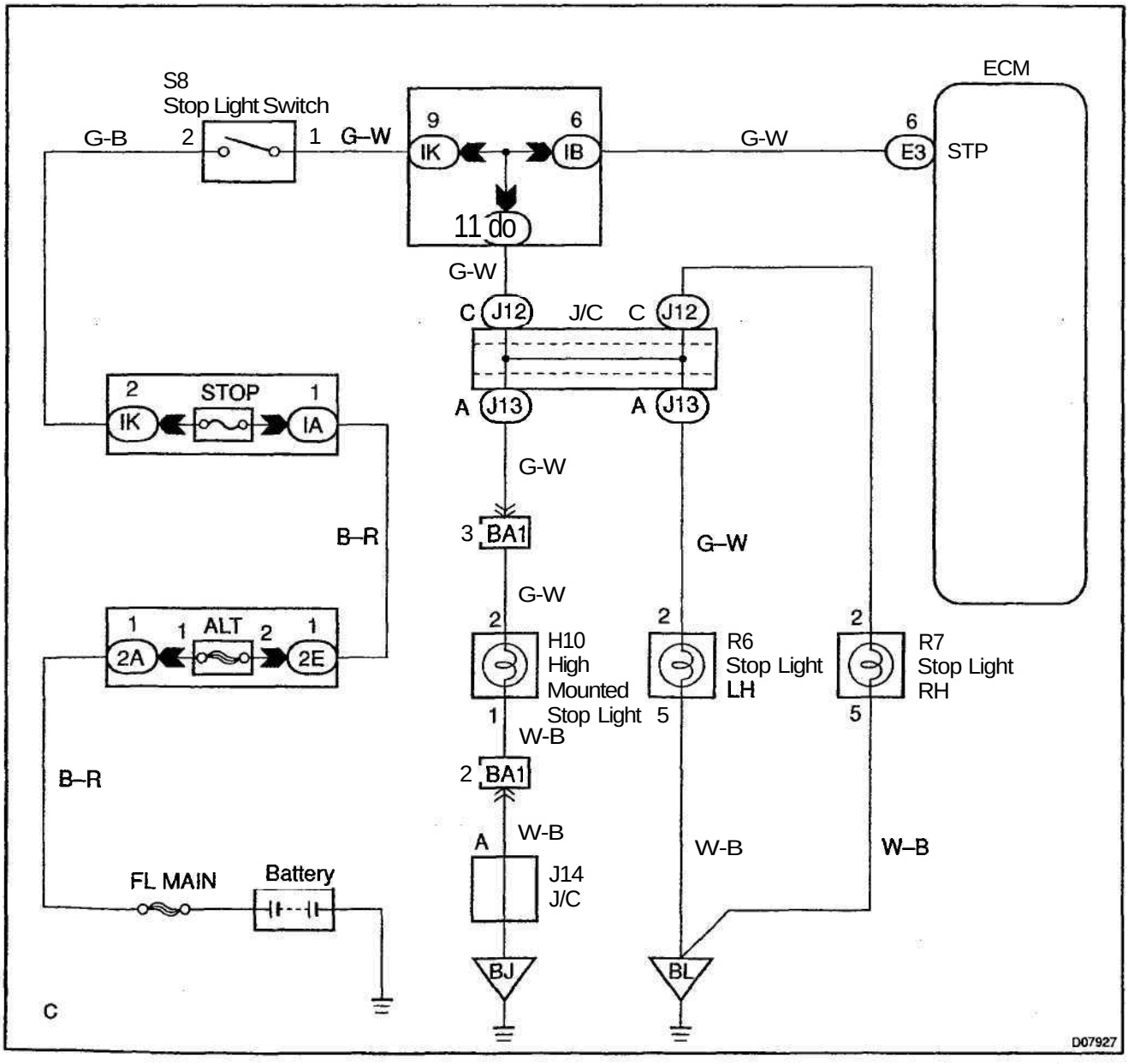

INSPECTION PROCEDURE

HINT:
Read freeze frame data using TOYOTA hand-held tester or OBD II scan tool. Because freeze frame records the engine conditions when the malfunction is detected, when troubleshooting it is useful for determining whether the vehicle was running or stopped, the engine warmed up or not, the air-fuel ratio lean or rich, etc. at the time of the malfunction.

1	**Check operation of stop light.**

PREPARATION:
Check if the stop lights go on and off normally when the brake pedal is operated and released.

NG → **Check and repair stop light circuit (See page BE-33).**

OK ↓

2	**Check STP signal.**

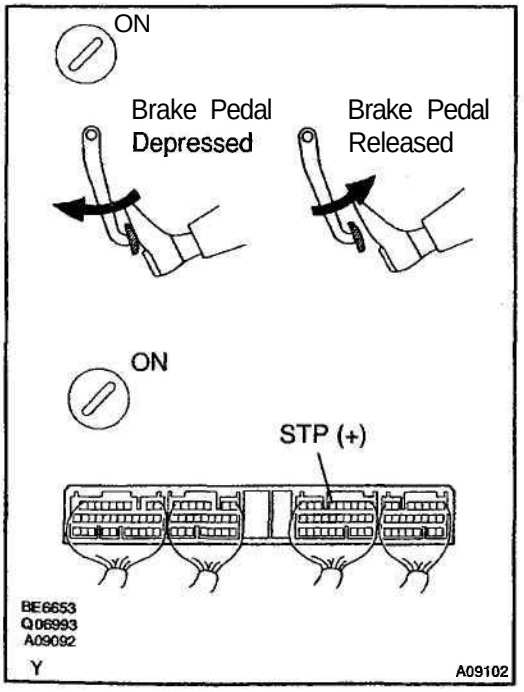

When using TOYOTA hand-held tester:
PREPARATION:
(a) Connect the to the DLC3.
(b) Turn the ignition switch ON and TOYOTA hand-held tester main switch ON.
CHECK:
Read the STP signal on the TOYOTA hand-held tester.
OK:
Brake pedal is depressed: STP ... ON
Brake pedal is released: STP ... OFF

When not using TOYOTA hand-held tester:
PREPARATION:
Turn the ignition switch ON.
CHECK:
Check voltage between terminal STP of ECM and body ground.
OK:

Brake pedal	Voltage
Depressed	7.5-14V
Released	Below 1.5 V

OK → **Check for intermittent problems (See page DI-3).**

NG ↓

3	Check harness and connector between ECM and stop light switch (See page IN–30).

NG → Repair or replace harness or connector.

OK →

Check and replace ECM (See page IN–30).

D13BN-03

DTC	P1600	ECM BATT Malfunction

CIRCUIT DESCRIPTION

Battery positive voltage is supplied to terminal BATT of the ECM even when the ignition switch is OFF for use by the DTC memory and air-fuel ratio adaptive control value memory, etc.

DTC No.	DTC Detecting Condition	Trouble Area
P1600	Open in back up power source circuit	• Open in back up power source circuit • ECM

HINT:
If DTC P1600 appear, the ECM does not store another DTC.

WIRING DIAGRAM

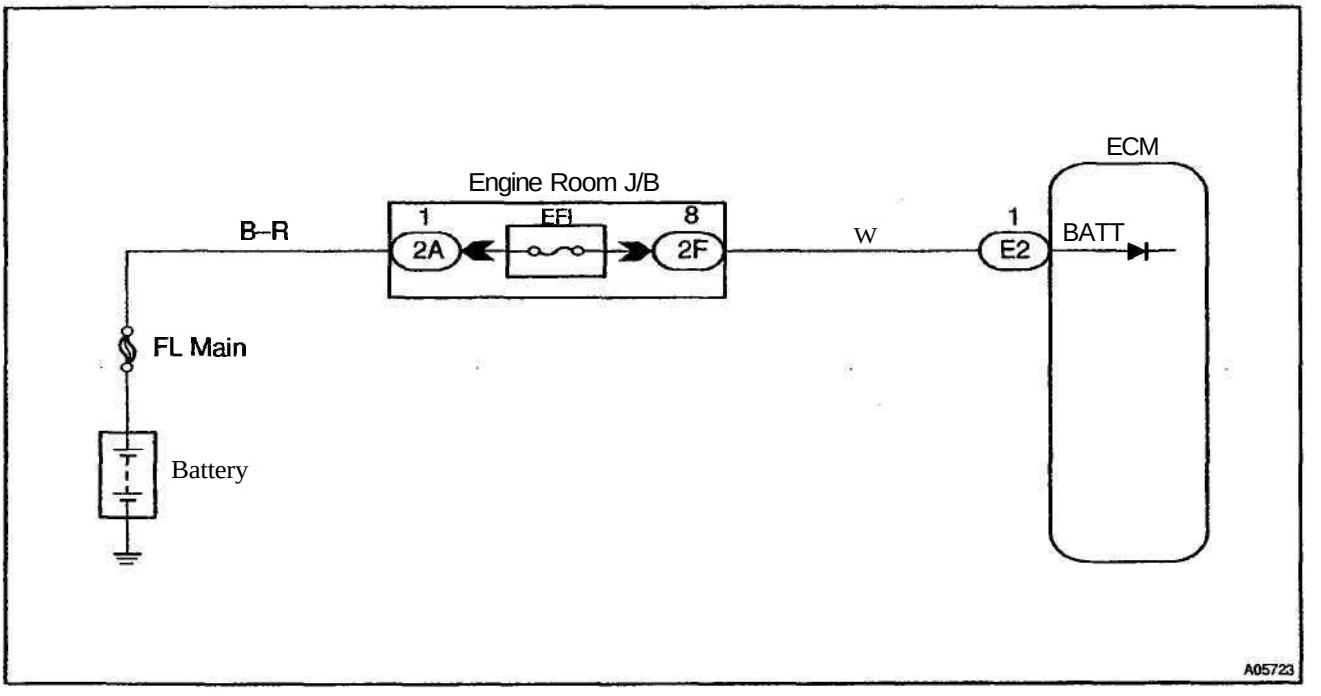

INSPECTION PROCEDURE

HINT:
Read freeze frame data using TOYOTA hand–held tester or OBD II scan tool. Because freeze frame records the engine conditions when the malfunction is detected, when troubleshooting it is useful for determining whether the vehicle was running or stopped, the engine warmed up or not, the air-fuel ratio lean or rich, etc. at the time of the malfunction.

1	Check voltage between terminal BATT of ECM connector and body ground.

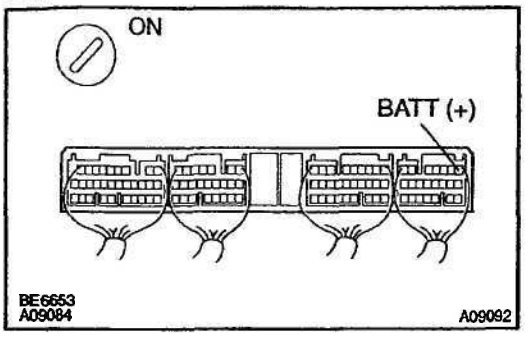

PREPARATION:
Remove the ECM cover.
CHECK:
Measure voltage between terminal BATT of the ECM connector and body ground.
OK:
Voltage 9 – 14 V

OK	Check and replace ECM (See page IN-30).

NG

2	Check EFI fuse.

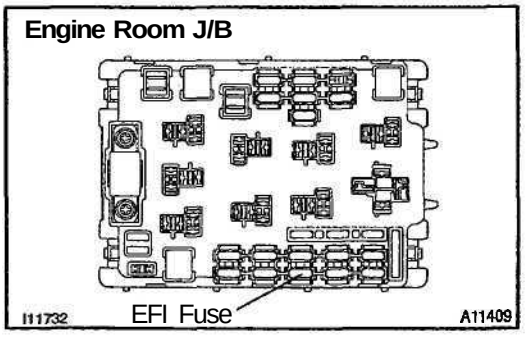

PREPARATION:
Remove the EFI fuse from the engine room J/B.
CHECK:
Check continuity of EFI fuse.
OK:
Continuity

NG	Check for short in all the harness and components connected to EFI fuse.

OK

Check and repair harness or connector between battery and EFI fuse and ECM (See page IN-30).

DTC	P1645	Body ECU Malfunction

CIRCUIT DESCRIPTION

ECM receives the operating condition (ON/OFF) of A/C from A/C ECU and it also receives the electrical load information from the body ECU.
ECM uses these information to control the engine (idle up, etc.).

DTC No.	DTC Detecting Condition	Trouble Area
P1645	Condition (a) or (b) continues for 3.0 sec. (a) No communication from body ECU (b) No communication from A/C ECU	• Body ECU • A/C ECU • Communication bus

INSPECTION PROCEDURE

HINT:
Read freeze frame data using TOYOTA hand-held tester or OBD II scan tool. Because freeze frame records the engine conditions when the malfunction is detected, when troubleshooting it is useful for determining whether the vehicle was running or stopped, the engine warmed up or not, the air-fuel ratio lean or rich, etc. at the time of the malfunction.
Perform troubleshooting the Multiplex Communication System (See page DI-600).

DTC	P1656	OCV Circuit Malfunction

CIRCUIT DESCRIPTION

Refer to DTC P1349 (VVT System Malfunction) on page DI–123.

DTC No.	DTC Detecting Condition	Trouble Area
P1656 P1663	Open or short in oil control valve circuit	•Open or short in oil control valve circuit • Oil control valve • ECM

WIRING DIAGRAM

Refer to DTC P1349 (VVT System Malfunction) on page DI–123 for the WIRING DIAGRAM.

INSPECTION PROCEDURE

HINT:

Read freeze frame data using TOYOTA hand–held tester or OBD II scan tool. Because freeze frame records the engine conditions when the malfunction is detected, when troubleshooting it is useful for determining whether the vehicle was running or stopped, the engine wanned up or not, the air-fuel ratio lean or rich, etc. at the time of the malfunction.

TOYOTA hand-held tester

1	**Check OCV circuit.**

PREPARATION:

(a) Start the engine and warmed it up.

(b) Connect the TOYOTA hand–held tester and select VVT from ACTIVE TEST menu.

CHECK:

Check the engine speed when operate the OCV by the TOYOTA hand–held tester.

OK:

WT system is OFF (OCV is OFF):
Normal engine speed
WT system is ON (OCV is ON):
Rough idle or engine stalled

OK → **Check for intermittent problems (See page DI–3).**

NG

2	Check operation of OCV.

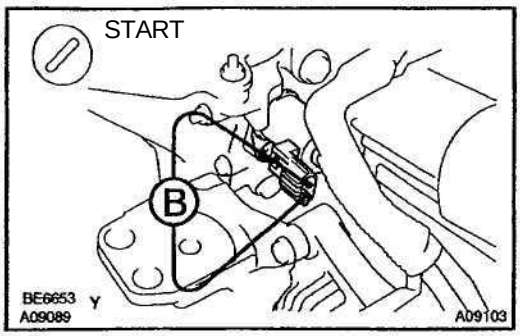

PREPARATION:

(a) Start the engine and warmed it up.
(b) Disconnect the OCV connector.
(c) Apply battery positive voltage between terminals of the OCV.

CHECK:

Check the engine speed.

OK:

Rough idle or engine stalled.

NG → **Replace OCV.**

OK

3	Check voltage between terminals OCV+ and OCV- of ECM connector (See page DM23).

NG → **Check and replace ECM (See page IN–30).**

OK

4	Check for open and short in harness and connector between OCV and ECM (See page IN–30).

NG → **Repair or replace.**

OK

Check for intermitent problems (See page DI–3).

OBD II scan tool (excluding TOYOTA hand-held tester)

1	Check operation of OCV.

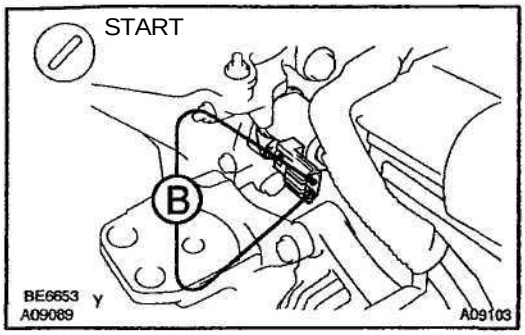

PREPARATION:
(a) Start the engine and warmed it up.
(b) Disconnect the OCV connector.
(c) Apply battery positive voltage between terminals of the OCV.

CHECK:
Check the engine speed.

OK:
Rough idle or engine stalled

NG → Replace OCV.

OK

2	Check voltage between terminals OCV+ and OCV- of ECM connector (See page DM23).

NG → Check and replace ECM (See page IN–30).

OK

3	Check for open and short in harness and connector between OCV and ECM (See page IN–30).

NG → Repair or replace.

OK

Check for intermitent problems (See page DI–3).

DI6OU–01

DTC	P1690	OCV for VVTL Circuit Malfunction

CIRCUIT DESCRIPTION

When the engine speed reaches 6,000b rpm, the VVTL system switches the locker arm from low speed to high speed. The ECM control the OCV to apply hydraulic pressure to the piston in the locker arm and switch the locker arm by locking the slipper for high speed.

DTC No.	DTC Detecting Condition	Trouble Area
P1690	Open or short in oil control valve for VVTL circuit	• Open or short in oil control valve circuit • Oil control valve (for VVTL) •ECM

WIRING DIAGRAM

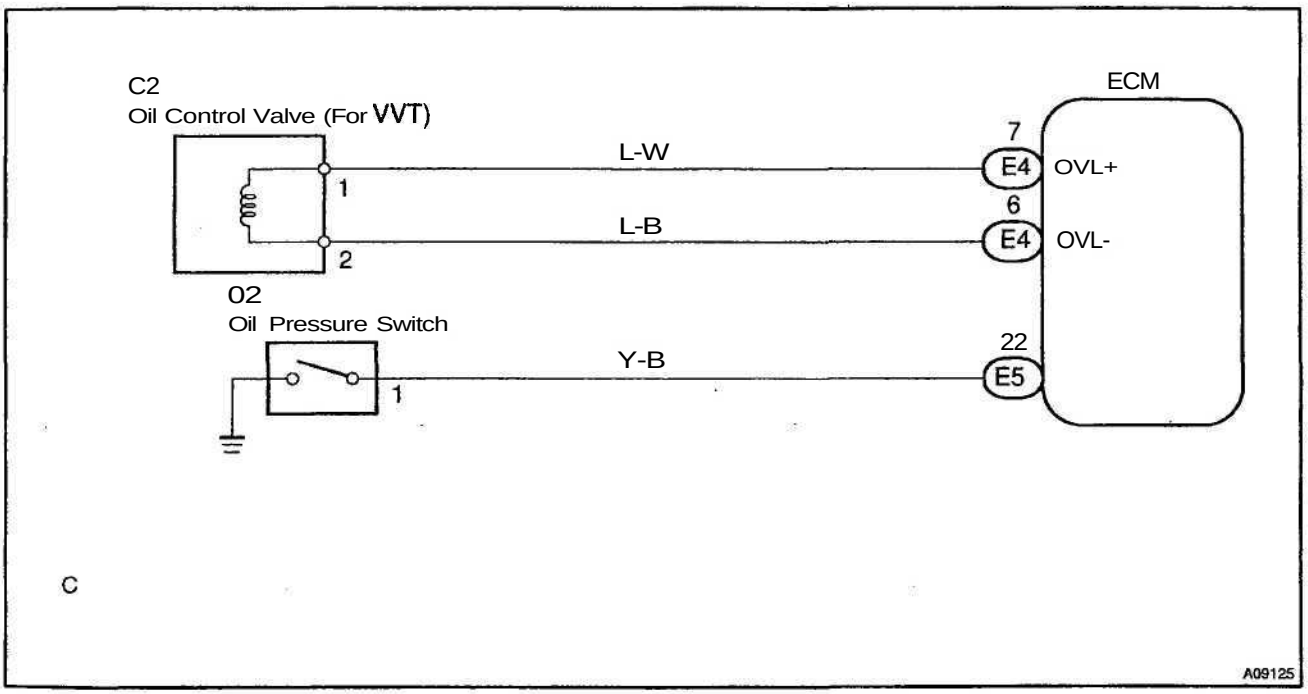

INSPECTION PROCEDURE

HINT:

Read freeze frame data using TOYOTA hand–held tester or OBD II scan tool. Because freeze frame records the engine conditions when the malfunction is detected, when troubleshooting it is useful for determining whether the vehicle was running or stopped, the engine warmed up or not, the air-fuel ratio lean or rich, etc. at the time of the malfunction.

TOYOTA hand-held tester

1	**Check OCV for VVTL circuit.**

PREPARATION:

(a) Start the engine and warmed it up.
(b) Connect the TOYOTA hand–held tester and select VVTL from ACTIVE TEST menu.
(c) Maintain engine speed at 1,500 - 2,500 rpm.

CHECK:

Check the engine speed when operate the OCV by the TOYOTA hand–held tester.

OK:

VVTL system is OFF (OCV is OFF):
Normal engine speed
VVTL system is ON (OCV is ON):
Rough engine speed or engine stalled

OK → **Check for intermittent problems** (See **page DI–3**).

NG

2	**Check operation of OCV for VVTL.**

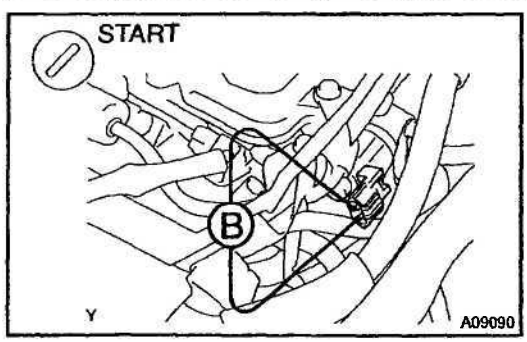

PREPARATION:

(a) Start the engine and warmed it up.
(b) Disconnect the OCV for VVTL connector.
(c) Maintain engine speed at 1,500 - 2,500 rpm.
(d) Apply battery positive voltage between terminals of the OCV.

CHECK:

Check the engine speed.

OK:

Engine stalled.

NG → **Replace OCV for VVTL.**

OK

3	Check for open and short in harness and connector between OCV for VVTL and ECM (See page IN–30).

NG → Repair or replace.

OK →

Check and replace ECM (See page IN–30).

OBD II scan tool (excluding TOYOTA hand-held tester)

1	Check operation of OCV for VVTL.

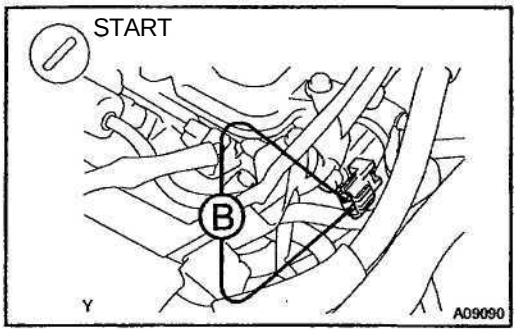

PREPARATION:

(a) Start the engine and warmed it up.
(b) Disconnect the OCV connector.
(c) Maintain engine speed at 1,500 - 2,500 rpm.
(d) Apply battery positive voltage between terminals of the OCV.

CHECK:

Check the engine speed.

OK:

Rough engine speed or engine stalled

NG → Replace OCV for VVTL.

OK →

2	Check voltage between terminals OVL+ and OVL- of ECM connector (See page DI–20).

NG → Check and replace ECM (See page IN–30).

OK →

3	Check for open and short in harness and connector between OCV for VVTL and ECM (See page IN-30).

NG → Repair or replace.

OK →

Check and replace ECM (See page IN-30).

D6OV-01

DTC	P1692	OCV for VVTL Open Malfanction

DTC	P1693	OCV for VVTL Close Malfanction

CIRCUIT DESCRIPTION

Refer to DTC P1690 (OCV for VVTL Circuit Malfanction) on page DI–139.

DTC No.	DTC Detecting Condition	Trouble Area
P1692	In the condition that the engine speed is 6,000 rpm or less and the oil pressure switch on for 5 sec. or more.	• Open or short in oil control valve circuit • Oil control valve (for VVTL) • ECM
P1693	In the condition that the water temperature is 60 °C or more, the engine speed is 6,000 rpm or more, and the oil pressure switch OFF for 1 sec. or more.	

WIRING DIAGRAM

Refer to DTC P1690 (OCV for VVTL Circuit Malfanction) on page DI-139.

INSPECTION PROCEDURE

1	Check oil pressure switch for WTL (See page LU–1).

NG → Reprace oil pressure switch.

OK

2	**Check for open and short in harness and connector between oil pressure switch for VVTL and ECM (See page IN–30).**

NG → **Repair or replace.**

OK

3	Check oil pressure for VVTL (See page LU–1).

OK → Check and replace ECM (See page IN–30).

NG

4	Check OCV for VVTL (See page **SF–50**) and oil filter.

NG → Repiar or replace OCV or filter.

OK

5	Check for open and short in harness and connector between OCV for VVTL and ECM (See page **IN–30**).

NG → **Repair or replace.**

OK

Check and replace ECM (See page **IN–30**).

DTC	P1780	Park/Neutral Position Switch Malfunction (Only for A/T)

CIRCUIT DESCRIPTION

The park/neutral position switch goes on when the shift lever is in the N or P shift position. When it goes on terminal NSW of the ECM is grounded to body ground via the starter relay thus the terminal NSW voltage becomes 0V. When the shift lever is in the D, 2, L, or R position, the park/neutral position switch goes off, so the voltage of ECM. Terminal NSW becomes battery positive voltage, the voltage of the ECM internal power source.
If the shift lever is moved from the N position to the D position, this signal is used for air-fuel ratio correction and for idle speed control (estimated control), etc.

DTC No.	DTC Detecting Condition	Trouble Area
P1780	2 or more switches are ON simultaneously for "N", "2", "L"and "R" position (2 trip detection logic)	• Short in park/neutral position switch circuit • Park/neutral position switch • ECM
	When driving under conditions (a) and (b) for 30 sec. or more the park/neutral position switch is ON (N position): (2 trip detection logic) (a) Vehicle speed: 80 km/h (50 mph) or more (b) Engine speed: 2,000 ~ 5,000 rpm	

HINT:
After confirming DTC P1780, use the TOYOTA hand-held tester to confirm the PNP switch signal from "CURRENT DATA".

WIRING DIAGRAM

Refer to DTC P1780 on page U240E:DI-202, U341E:DI-261 for the WIRING DIAGRAM.

INSPECTION PROCEDURE

HINT:
Read freeze frame data using TOYOTA hand-held tester or OBD II scan tool. Because freeze frame records the engine conditions when the malfunction is detected, when troubleshooting it is useful for determining whether the vehicle was running or stopped, the engine warmed up or not, the air-fuel ratio lean or rich, etc. at the time of the malfunction.
Refer to DTC P1780 on U240E:DI-202, U341E:DI-261 for the INSPECTION PROCEDURE.

ECM Power Source Circuit

CIRCUIT DESCRIPTION

When the ignition switch is turned ON, battery positive voltage is applied to the coil, closing the contacts of the EFI main relay (Making: EFI) and supplying power to the terminal +B of the ECM.

WIRING DIAGRAM

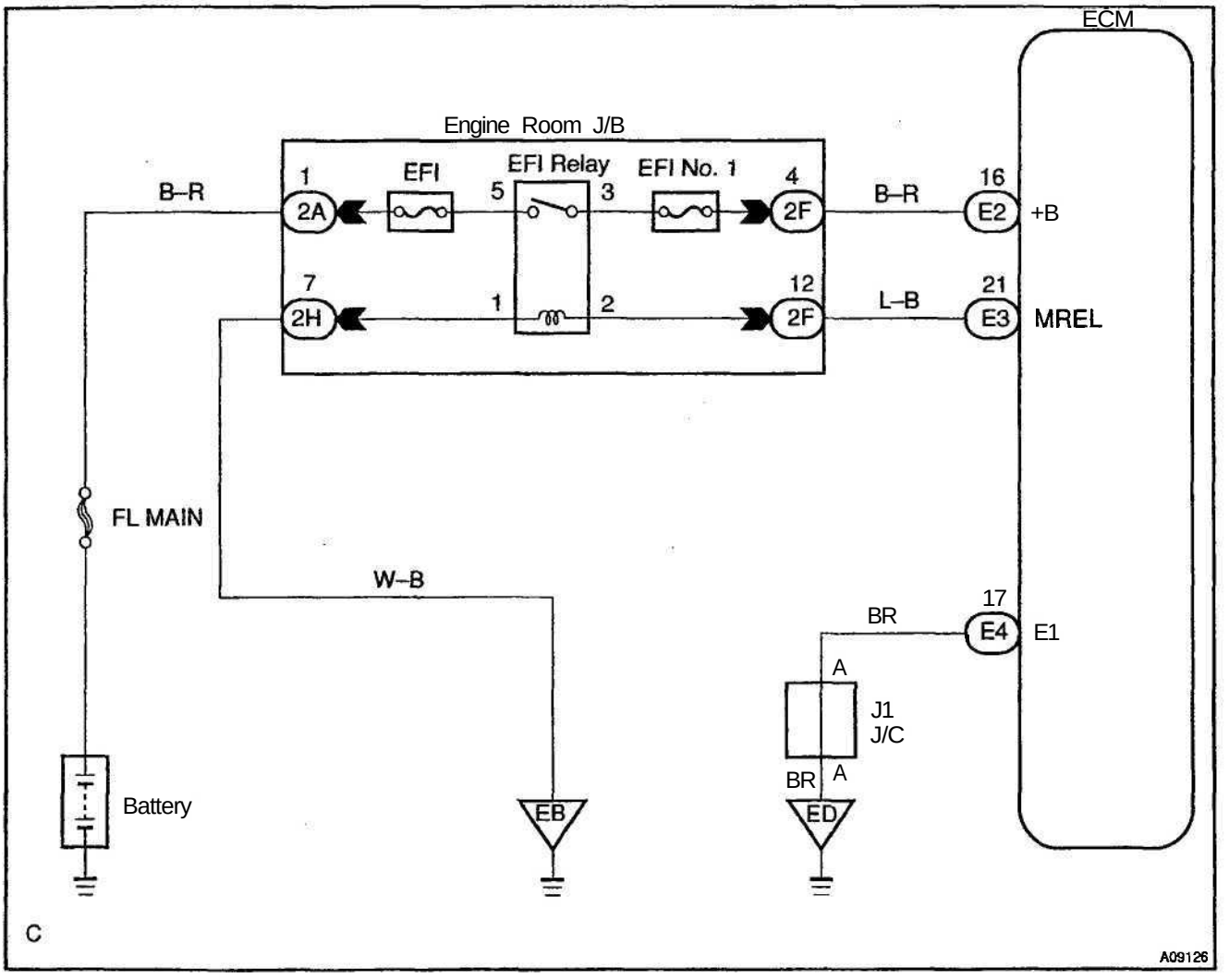

INSPECTION PROCEDURE

1	Check voltage between terminals + B and E1 of ECM connector.

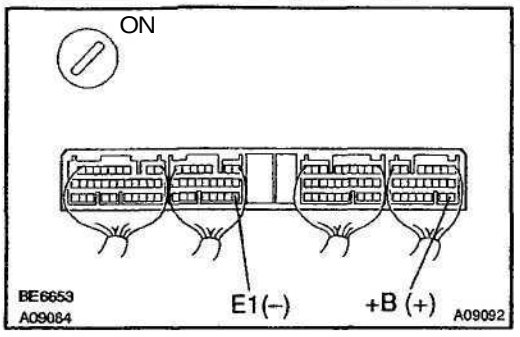

PREPARATION:

(a) Remove the ECM cover.

(b) Turn the ignition switch ON.

CHECK:

Measure voltage between terminals + B and E1 of the ECM connector.

OK:

Voltage: 9 – 14 V

OK	Proceed to next circuit inspection shown on Problem symptoms table (See page DI–22).

NG

2	Check for open in harness and connector between terminal E1 of ECM and body ground (See page IN–30).

NG	Repair or replace harness or connector.

OK

3	Check EFI main relay (Marking: EFI) (See page SF-52).

NG	Replace EFI main relay.

OK

4	Check EFI fuse (See page DM33).

NG	Check for short in all the harness and components connected to EFI fuse.

OK

5	**Check for open in harness and connector between EFI main relay (Marking: EFI) and battery, EFI main relay (Marking: EFI) and ECM (See page IN–30).**

NG → **Repair or replace harness or connector.**

OK

6	**Check EFI No. 1 fuse.**

Engine Room J/B

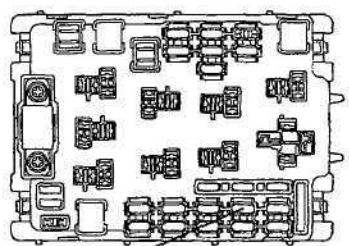

PREPARATION:
Remove IGN fuse from engine room J/B.
CHECK:
Check continuity of EFI No. 1 fuse.
OK:
Continuity

NG → **Check for short in all the harness and components connected to EFI No. 1 fuse.**

OK

7	Check ignition switch (See page **BE–14**).

NG → Replace ignition switch.

OK

Check for open in harness and connector between IG switch and EFI main relay and body ground (See page IN–30).

D0380-04

Fuel Pump Control Circuit

CIRCUIT DESCRIPTION

In the diagram below, when the engine is cranked, current flows from terminal ST of the ignition switch to the starter relay coil and also current flows to terminal STA of ECM (STA signal).
When the STA signal and NE signal are input to the ECM, Tr is turned ON, current flows to coil of the circuit opening relay, the relay switches on, power is supplied to the fuel pump and the fuel pump operates.
While the NE signal is generated (engine running), the ECM keeps Tr ON (circuit opening relay ON) and the fuel pump also keeps operating.

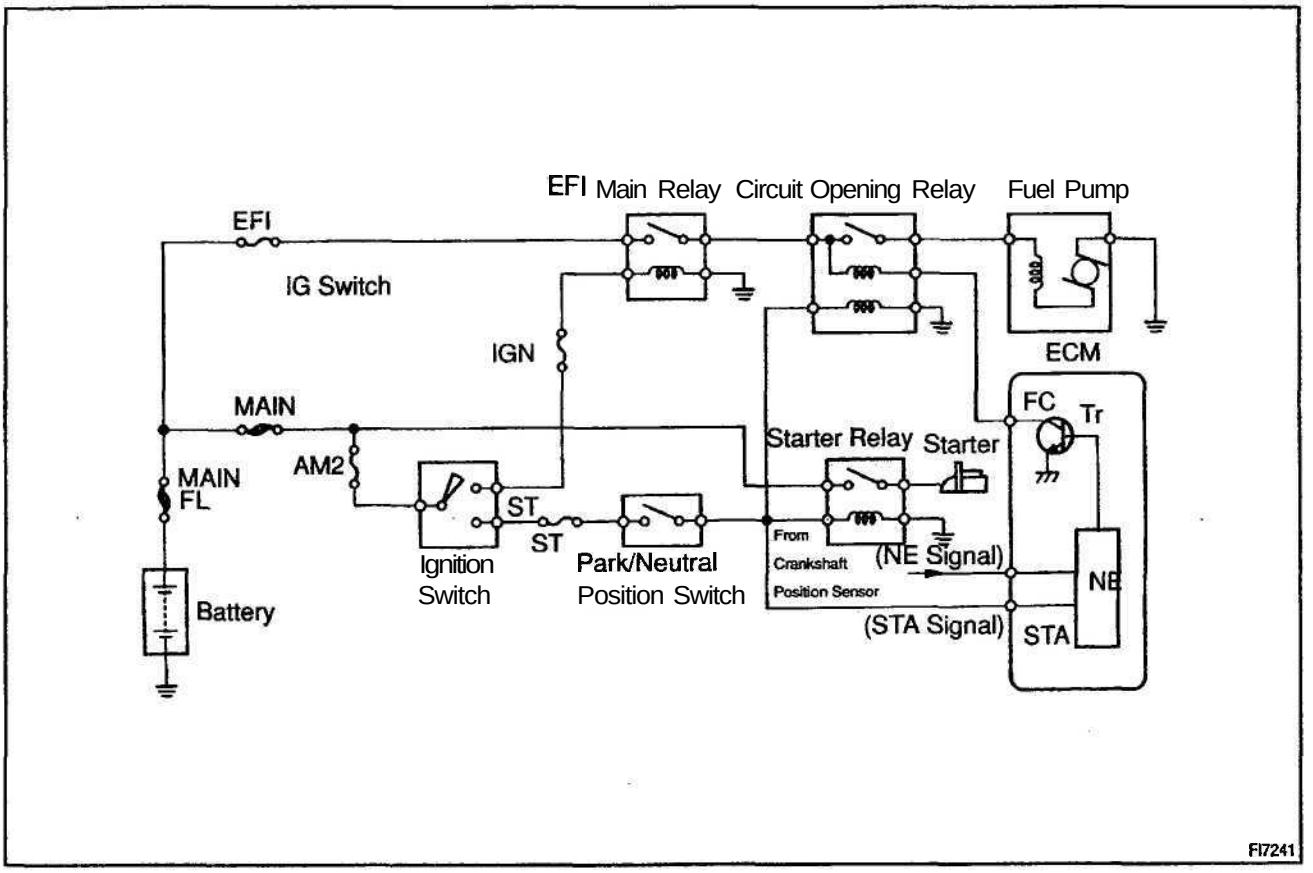

WIRING DIAGRAM

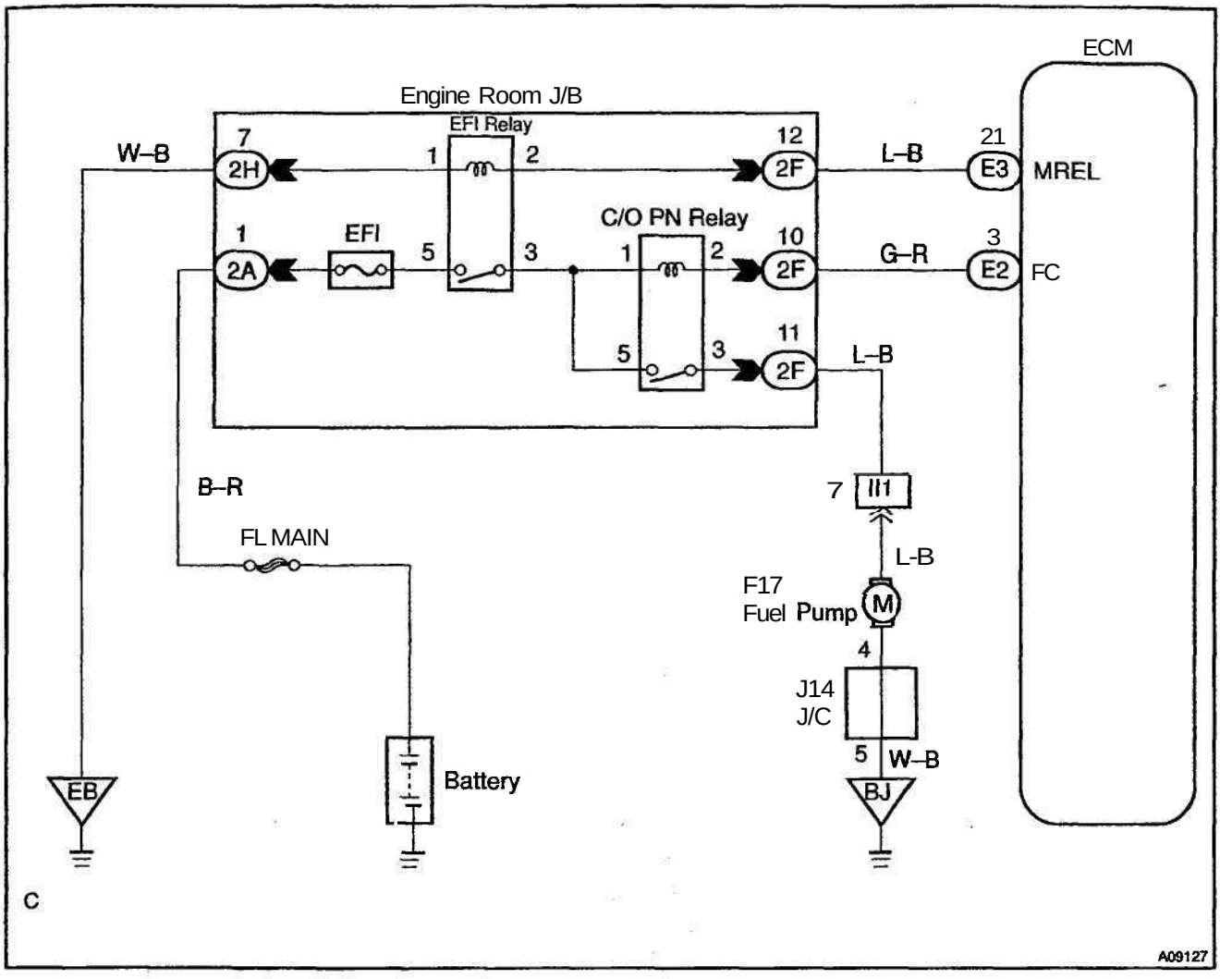

INSPECTION PROCEDURE

TOYOTA hand–held tester:

1	Connect the TOYOTA hand–held tester and check operation of fuel pump (See page DI–3).

OK → Proceed to next circuit inspection shown on problem symptoms table (See page DI–22).

NG

2	Check for ECM power source circuit (See page DI–146).

NG → Repair or replace.

OK

3	Check circuit opening relay (Marking: CIR OPN) (See page SF–53).

NG → Replace circuit opening relay.

OK

4	Check voltage between terminal FC of ECM and body ground.

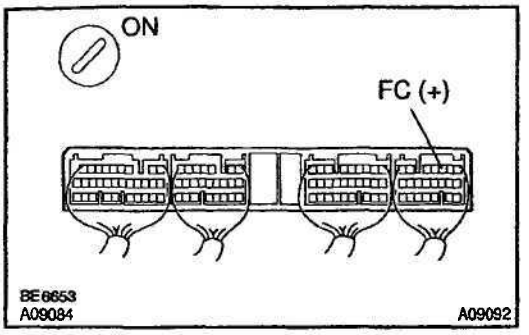

PREPARATION:

(a) Remove the ECM cover.

(b) Turn the ignition switch ON.

CHECK:

Measure voltage between terminal FC of the ECM and body ground.

OK:

Voltage 9 – 14 V

NG → **Check for open in harness and connector between EFI main relay and circuit opening relay and ECM (See page IN–30).**

OK

5	Check fuel pump (See page **SF–6).**

NG → **Repair or replace fuel pump.**

OK

6	Check for open in harness and connector between circuit opening relay (Marking: **CIR** OPN) and fuel pump and body ground (See page **IN–30).**

NG → Repair or replace harness or connector.

OK

Check and replace ECM (See page IN–30).

OBD II scan tool (excluding TOYOTA hand-held tester):

1	**Check operation of fuel pump.**

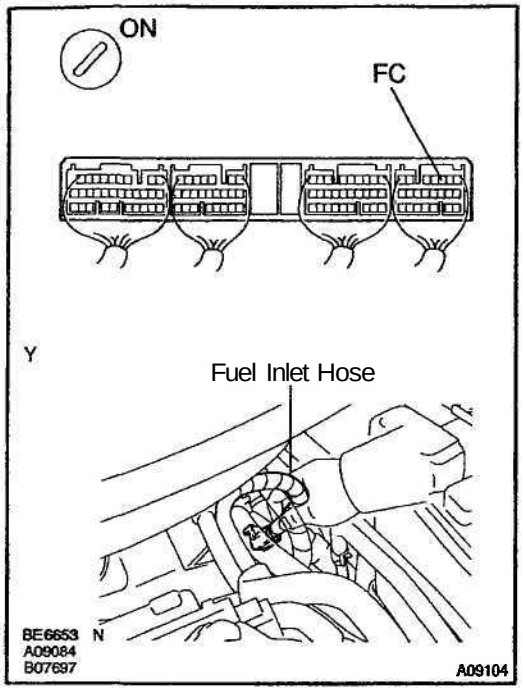

PREPARATION:

(a) Remove the ECM cover.
(b) Turn the ignition switch ON.

CHECK:

(a) Connect between terminal FC of the ECM connector and body ground.
(b) Check for fuel pressure in the fuel inlet hose when it is pinched off.

OK:

There is pressure in fuel inlet hose.

HINT:

At this time, you will hear a fuel return flowing noise.

OK	**Proceed to next circuit inspection shown on problem symptoms table (See page DI–22).**

NG

2	Check for ECM power source circuit (See page DM46).

NG	Repair or replace.

OK

3	Check circuit opening relay (Marking: CIR OPN) (See page **SF–53).**

NG	Replace circuit opening **relay.**

OK

4	Check voltage between terminal FC of ECM and body ground (See page DI-149, step 4).

NG → Check for open in harness and connector between EFI main relay and circuit opening relay and ECM (See page IN–30).

OK ↓

5	Check fuel pump (See page SF–6).

NG → Repair or replace fuel pump.

OK ↓

6	Check for open in harness and connector between circuit opening relay (Marking: CIR OPN) and fuel pump and body ground (See page IN–30).

NG → Repair or replace harness or connector.

OK ↓

Check and replace ECM (See page IN–30).

AUTOMATIC TRANSAXLE (U240E)

DI4YY-02

HOW TO PROCEED WITH TROUBLESHOOTING

Items inside [ ] are titles of pages in this manual, with the page number indicated in the bottom portion. See the indicated pages for detailed explanations.

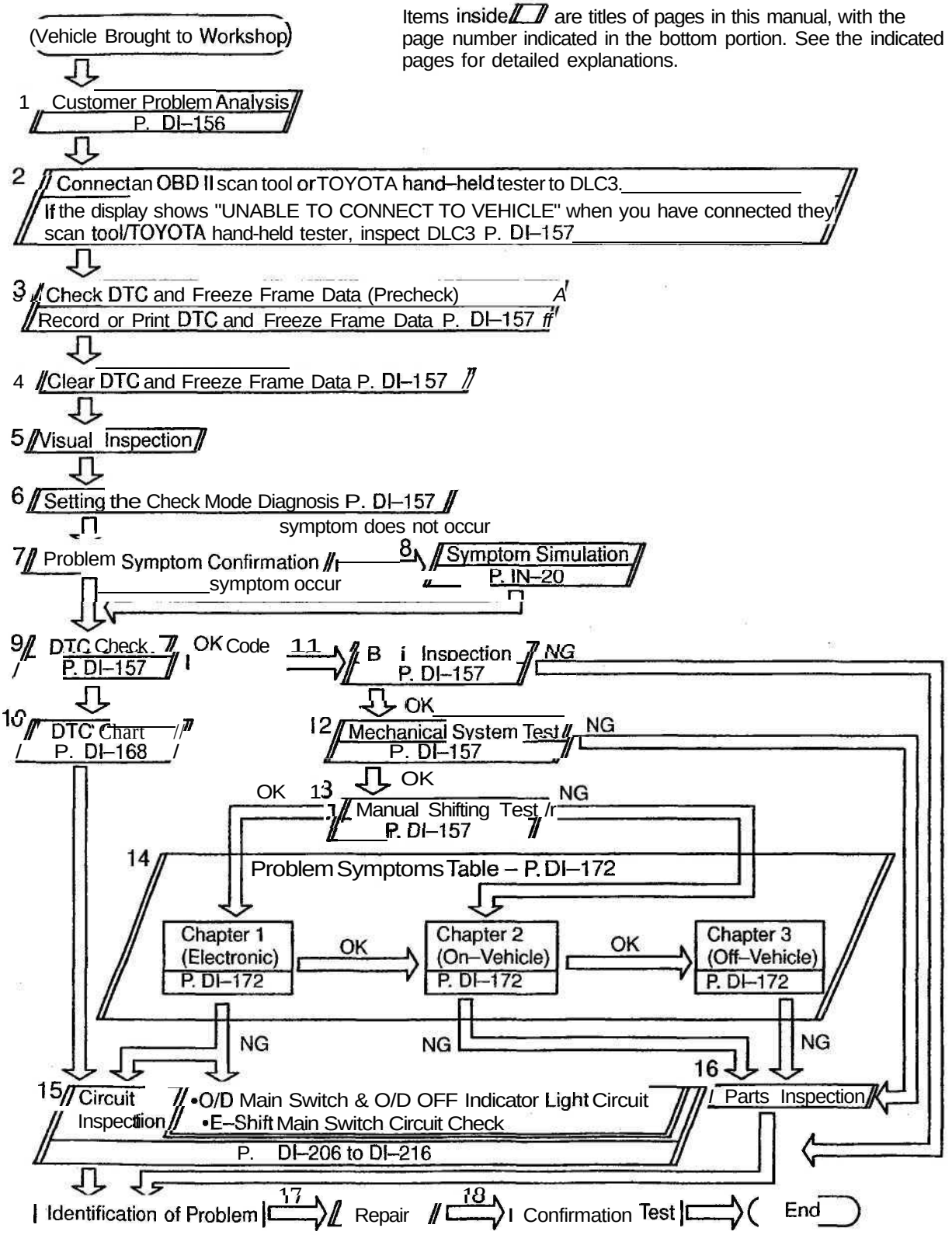

DI4YZ-01

CUSTOMER PROBLEM ANALYSIS CHECK

Automatic Transaxle System Check Sheet	Inspector's Name :

Customer's Name		Registration No.	
		Registration Year	/ /
		Frame No.	
Date Vehicle Brought In	/ /	Odometer Reading	km mile

Date Problem Occurred	/ /
How Often Does Problem Occur?	☐ Continuous ☐ Intermittent (times a day)

Symptoms	☐ Vehicle does not move (☐ Any position ☐ Particular position)
	☐ No up-shift (☐ 1st → 2nd ☐ 2nd → 3rd ☐ 3rd → O/D)
	☐ No down-shift (☐ O/D → 3rd ☐ 3rd → 2nd ☐ 2nd → 1st)
	☐ Lock-up malfunction
	☐ Shift point too high or too low
	☐ Harsh engagement (☐ N → D ☐ Lock-up ☐ Any drive position)
	☐ Slip or shudder
	☐ No kick-down
	D Others ( )

Check Item	Malfunction Indicator Lamp	☐ Normal ☐ Remains ON

DTC Check	1st Time	☐ Normal code ☐ Malfunction code (DTC)
	2nd Time	☐ Normal code ☐ Malfunction code (DTC)

DI6KW-01

PRE–CHECK

1. DIAGNOSIS SYSTEM

(a) Description

- When troubleshooting OBD II vehicles, the only difference from the usual troubleshooting procedure is that you connect to the vehicle an OBD II scan tool complying with SAE J1987 or TOYOTA hand–held tester, and read off various data output from the vehicle's ECM.

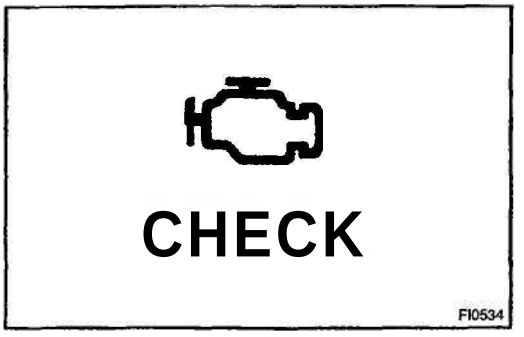

- OBD II regulations require that the vehicle's on-board computer lights up the Malfunction Indicator Lamp (MIL) on the instrument panel when the computer detects a malfunction in the computer itself or in drive system components which affect vehicle emissions. In addition to the MIL lighting up when a malfunction is detected, the applicable DTCs prescribed by SAE J2012 are recorded in the ECM memory (See page DI–14).

If the malfunction only occurs in 3 trips, the MIL goes off but the DTCs remain recorded in the ECM memory.

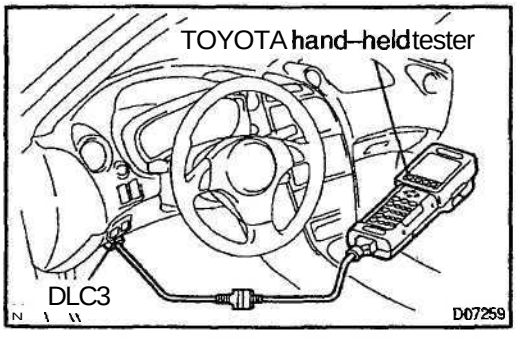

- To check the DTCs, connect an OBD II scan tool or TOYOTA hand–held tester to DLC3 on the vehicle. The OBD II scan tool or TOYOTA hand–held tester also enables you to erase the DTCs and check freeze frame data and various forms of engine data (For instruction book).
- DTCs include SAE controlled codes and Manufacturer controlled codes.
  SAE controlled codes must be set as prescribed by the SAE, while Manufacturer controlled codes can be set freely by the manufacturer within the prescribed limits (See DTC chart on page DI–168).

- The diagnosis system operates in normal mode during normal vehicle use, and also has a check mode for technicians to simulate malfunction symptoms and perform troubleshooting. Most DTCs use 2-trip detection logic (*) to prevent erroneous detection. By switching the ECM to check mode when troubleshooting, the technician can cause the MIL to light up and for a malfunction that is only detected once or momentarily.
  (TOYOTA hand–held tester) (See page DI–157)
- *2–trip detection logic:
  When a logic malfunction is first detected, the malfunction is temporarily stored in the ECM memory.

If the same malfunction is detected again during the 2nd test drive, this 2nd detection causes the MIL to light up .

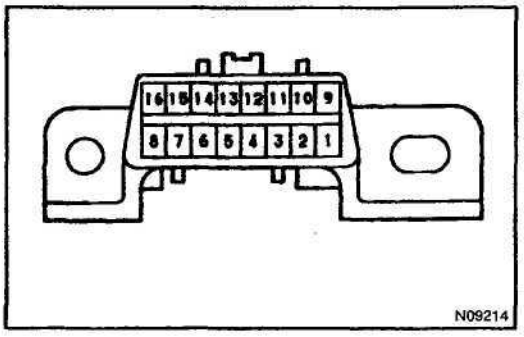

(b) Inspect the DLC3.
The vehicle's ECM uses ISO 9141–2 for communication. The terminal arrangement of DLC3 complies with SAE J1962 and matches the ISO 9141-2 format.

Tester connection	Condition	Specified condition
7 (Bus e Line) - 5 (Signal ground)	During communication	Pulse generation
4 (Chassis Ground) - Body	Always	1 fl or less
5 (Signal Ground) - Body	Always	1 Ω or less
16 (B+) – Body	Always	9-14V

HINT:
If your display shows "UNABLE TO CONNECT TO VEHICLE" when you have connected the cable of OBD II scan tool or TOYOTA hand–held tester to DLC3, turned the ignition switch ON and operated the scan tool, there is a problem on the vehicle side or tool side.

- If communication is normal when the tool is connected to another vehicle, inspect DLC3 on the original vehicle.
- If communication is still not possible when the tool is connected connected to another vehicle, the problem is probably in the tool itself, so consult the Service Department listed in the tool's instruction manual.

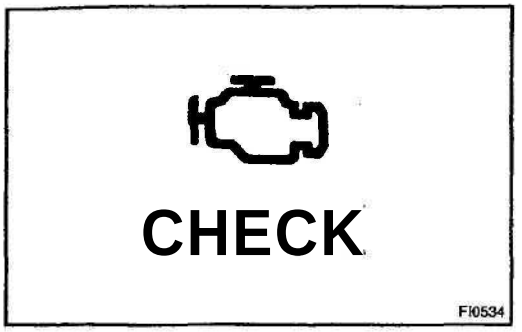

2. INSPECT DIAGNOSIS (NORMAL MODE)

(a) Check the MIL.

(1) The MIL comes on when the ignition switch is turned ON and the engine is not running.

HINT:

If the MIL does not light up, troubleshoot the combination meter (See page BE-2).

(2) When the engine is started, the MIL should go off. If the lamp remains on, the diagnosis system has detected a malfunction or abnormality in the system.

(b) Check the DTC.

NOTICE:

TOYOTA hand–held tester only: When the diagnostic system is switched from normal mode to check mode, it erases all DTCs and freeze frame data recorded in normal mode. So before switching modes, always check the DTCs and freeze frame data, and note them down.

(1) Prepare an OBD II scan tool (complying with SAE J1978) or TOYOTA hand-held tester.

(2) Connect the OBD II scan tool or TOYOTA hand-held tester to DLC3 at the lower of the instrument panel.

(3) Turn the ignition switch ON and turn the OBD II scan tool or TOYOTA hand–held tester switch ON.

(4) Use the OBD II scan tool or TOYOTA hand-held tester to check the DTCs and freeze frame data and note them down (For operating instructions, see the OBD II scan tool's instruction book).

(5) See page DI–168 to confirm the details of the DTCs.

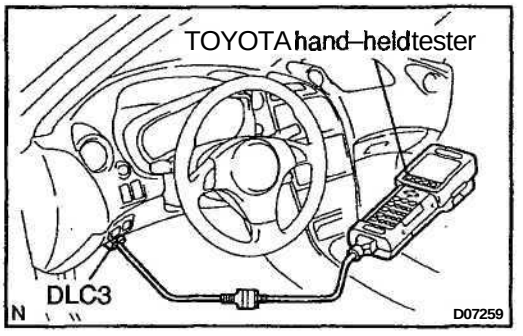

NOTICE:

When simulating symptoms with an OBD II scan tool (excluding TOYOTA hand–held tester) to check the DTCs, use normal mode. For codes on the DTCs chart subject to "2–trip detection logic", turn the ignition switch OFF after the symptoms have been simulated the 1st time. Then repeat the simulation process again. When the program has DTCs are recorded in the ECM.

3. INSPECT DIAGNOSIS (CHECK MODE)

HINT:

TOYOTA hand-held tester only: Compared to the normal mode, the check mode has high sensing ability to detect malfunctions. Furthermore, the same diagnostic items which are detected in Normal mode can also be detected in Check mode.

(a) Check the DTC.

(1) Check the initial conditions.

- Battery positive voltage 11 V or more.
- Throttle valve fully closed.
- Transaxle in P position.
- Air conditioning switched off.

(2) Turn the ignition switch OFF.

(3) Prepare a TOYOTA hand–held tester.

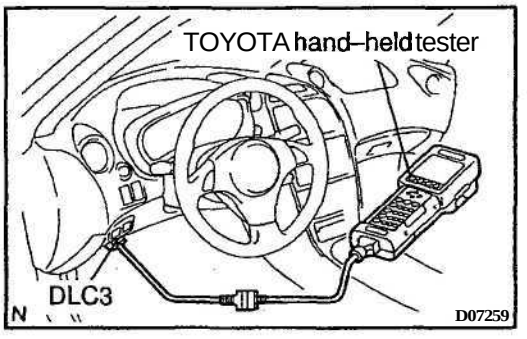

(4) Connect the TOYOTA hand–held tester to DLC3 at the lower of the instrument panel.

(5) Turn the ignition switch ON and switch the TOYOTA hand–held tester ON.

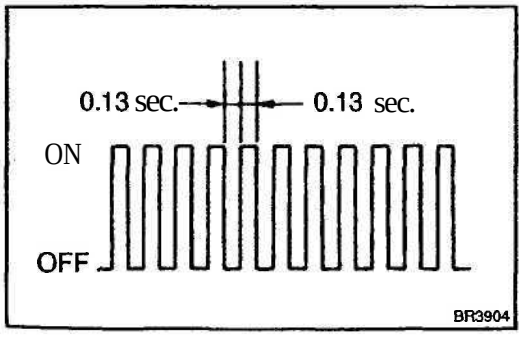

(6) Switch the TOYOTA hand–held tester from Normal mode to Check mode (Check that the MIL flashes).

(7) Start the engine (MIL goes out after the engine starts).

(8) Simulate the conditions of the malfunction described by the customer.

NOTICE:

Leave the ignition switch ON until you have checked the DTCs, etc.

(9) After simulating the malfunction conditions, use the TOYOTA hand-held tester diagnosis selector to check the DTCs and freeze frame data, etc.

HINT:

Take care not to turn the ignition switch OFF, as turning it off the diagnosis system from Check mode to Normal mode, so all DTCs, etc. are erased.

(10) After checking the DTC, inspect the applicable circuit.

(b) Clear the DTC.
The following operation will erase the DTC and freeze frame data. Operating an OBD II scan tool (complying with SAE J1978) or TOYOTA hand–held tester to erase the codes.
(See the OBD II scan tool's instruction book for operating instructions.)

NOTICE:
If the TOYOTA hand–held tester switches the ECM from Normal mode to Check mode or vice–versa, of if the ignition switch is turned from ON to ACC or OFF during chick mode, the DTCs and freeze frame data will be erased.

4. PROBLEM SYMPTOM CONFIRMATION

Taking into consideration the results of the customer problem analysis, try to reproduce the symptoms of the trouble. If the problem is that the transaxle does not up–shift, down–shift, or the shift point is too high or too low, conduct the following road test to confirm the automatic shift schedule and simulate the problem symptoms.

5. ROAD TEST

NOTICE:

Perform the test at normal operating ATF temperature 50 - 80 °C (122 – 176 °F).

(a) D position test
Shift into the D position and fully depress the accelerator pedal and check the following points.
(1) Check up–shift operation.
Check to see that 1 → 2, 2 → 3 and 3 → O/D up–shift takes place, and that the shift points conform to the automatic shift schedule (See page SS–41).

HINT:

- O/D Gear Up–shift Prohibition Control (1. Coolant temp. is 60 °C (140 °F) or less. 2. If there is a 10 km/h (6 mph) difference between the set cruise control speed and vehicle speed.)
- O/D Gear Lock–up Prohibition Control (1. Brake pedal is depressed. 2. Coolant temp. is 60 °C (140 °F) or less.)

(2) Check for shift shock and slip.
Check for shock and slip at the 1 → 2, 2 → 3 and 3 → O/D up–shifts.
(3) Check for abnormal noises and vibration.
Drive in the D position lock-up or O/D gear and check for abnormal noises and vibration.

HINT:

The check for the cause of abnormal noises and vibration must be done very thoroughly as it could also be due to loss of balance in the differential torque converter clutch, etc.

(4) Check kick–down operation.
While running in the D position, 2nd, 3rd and O/D gears, check to see that the possible kick–down vehicle speed limits for 2 → 1, 3 → 2 and O/D → 3 kick–downs conform to those indicated on the automatic shift schedule (See page SS–41).
(5) Check abnormal shock and slip at kick–down.
(6) Check the lock–up mechanism.
- Drive in D position, O/D gear, at a steady speed (lock-up ON) of about 60 km/h (37 mph),
- Lightly depress the accelerator pedal and check that the engine speed does not change abruptly.

If there is a big jump in engine speed, there is no lock–up.

(b) M position test

Shift to the M position, depress the accelerator pedal and check the following points.

Shift operations.

Pressing the transmission shift switch to "UP" or " Down" makes the transmission up–shifted or down-shifted respectively.

Without pressing the switch, it is not automatically shifted to neither up or down.

When a vehicle is stopped, it is automatically down–shifted to 1st gear.

HINT:

Manual shift prohibition control (1. When the ATF temperature is low. 2. When down-shifting causes engine overrun. 3. When down–shifting is required continuously, down–shifting to 1st gear may not be performed. 4. When the ATF temp. is high, up–shifting to O/D is not performed.

(c) 2 position test

Shift into the 2 position and fully depress the accelerator pedal and check the following points.

(1) Check up–shift operation.

Check to see that the 1 → 2 up–shift takes place and that the shift point conforms to the automatic shift schedule (See page SS–41).

HINT:

There is no O/D up–shift and lock-up in the 2 position.

(2) Check engine braking.

While running in the 2 position and 2nd gear, release the accelerator pedal and check the engine braking effect.

(3) Check for abnormal noises during acceleration and deceleration, and for shock at up–shift and down-shift.

(d) L position test

Shift into the L position and fully depress the accelerator pedal and check the following points.

(1) Check no up–shift.

While running in the L position, check that there is no up–shift to 2nd gear.

(2) Check engine braking.

While running in the L position, release the accelerator pedal and check the engine braking effect.

(3) Check for abnormal noises during acceleration and deceleration.

(e) R position test

Shift into the R position and fully depress the accelerator pedal and check for slipping.

CAUTION:

Before conducting this test ensure that the test area is free from people and obstruction.

(f) P position test

Stop the vehicle on a grade (more than 5°) and after shifting into the P position, release the parking brake. Then, check to see that the parking lock pawl holds the vehicle in place.

6. BASIC INSPECTION

(a) Check the fluid level.

HINT:

- Drive the vehicle so that the engine and transaxle are at normal operating temperature.
  Fluid temp.: 70 - 80 °C (158 - 176 °F)
- « Only use the COOL range on the dipstick as a rough reference when the fluid is replaced or the engine does not run.

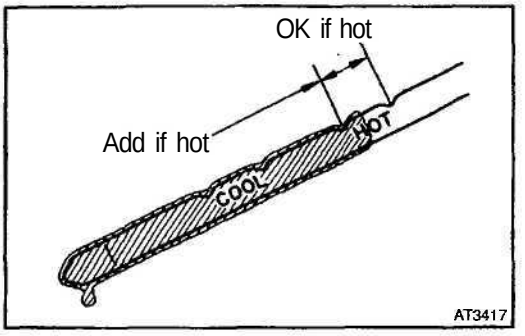

(1) Park the vehicle on a level surface and set the parking brake.
(2) With the engine idling and the brake pedal depressed, shift the shift lever into all positions from P to L position and return to P position.
(3) Pull out the dipstick and wipe it clean.
(4) Push it back fully into the pipe.
(5) Pull it out and check that the fluid level is in the HOT range.

If the level is at the low side, add new fluid.

Fluid type: ATF Type T–IV
Capacity: 4.1 liters (4.3 US qts, 3.6 Imp. qts)

NOTICE:
Do not overfill.

(b) Check the fluid condition.

If the fluid smells burnt or is black, replace it.

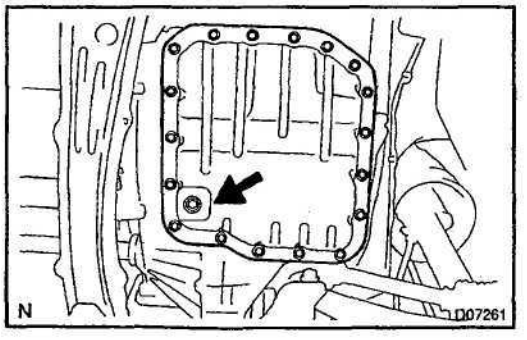

(c) Replace the ATF.
(1) Remove the drain plug and drain the fluid.
(2) Reinstall the drain plug securely.

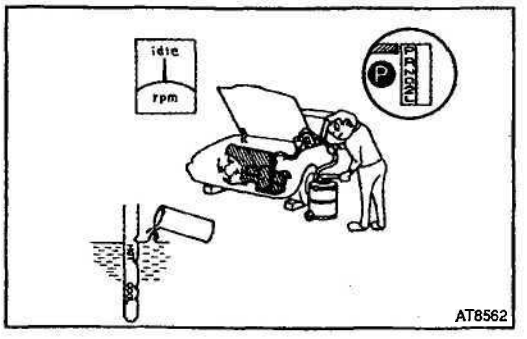

(3) With the engine OFF add new fluid through the oil filler pipe.
Fluid type: ATF Type T–IV
Capacity: 4.1 liters (4.3 US qts, 3.6 Imp. qts)
(4) Start the engine and shift the shift lever into all positions from P to L position and then shift into P position.

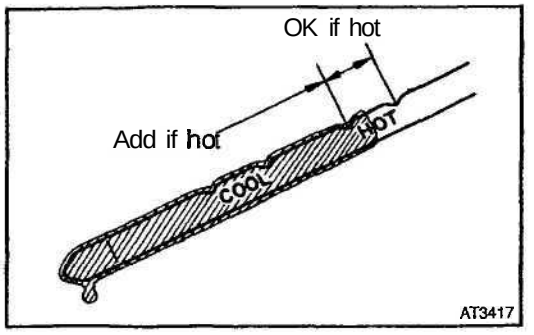

(5) With the engine idling, check the fluid level. Add fluid up to the COOL level on the dipstick.
(6) Check the fluid level at the normal operating temperature, 70 - 80 °C (158 - 176 °F), and add as necessary.

NOTICE:
Do not overfill.

(d) Check the fluid leaks.
Check for leaks in the transaxle.

If there are leaks, it is necessary to repair or replace O-rings, gaskets, oil seals, plugs or other parts.

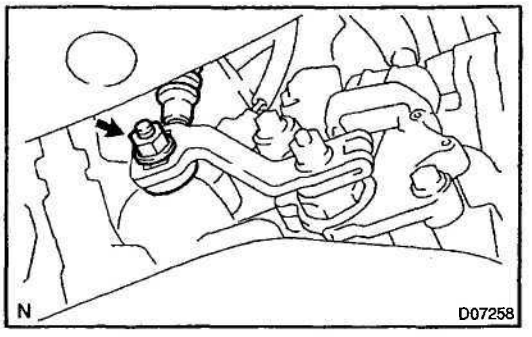

(e) Inspect and adjust the shift lever position.
When shifting the shift lever from the N position to other positions, check that the lever can be shifted smoothly and accurately to each position and that the position indicator is not aligned with the correct position.

If the indicator is not aligned with the correct position, carry out the following adjustment procedures.

(1) Loosen the nut on the shift lever.
(2) Push the control shaft fully downward.

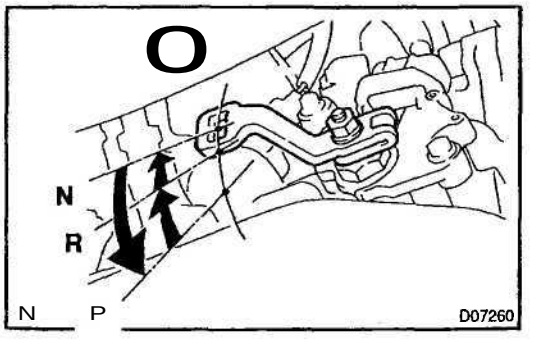

(3) Return the control shaft lever 2 notches to N position.
(4) Set the shift lever to N position.
(5) While holding the shift lever lightly toward the R position side, tighten the shift lever nut.

Torque: 13 N·m (130 kgf·cm, 9 ft·lbf)

(6) Start the engine and make sure that the vehicle moves forward when shifting the lever from the N to D position and reverses when shifting it to the R position.

(f) Inspect and adjust the park/neutral position.
Check that the engine can be started with the shift lever only in the N or P position, but not in other positions.

If it is not as stated above, carry out the following adjustment procedures.

(1) Loosen the park/neutral position switch bolt and set the shift lever to the N position.
(2) Align the groove and neutral basic line.

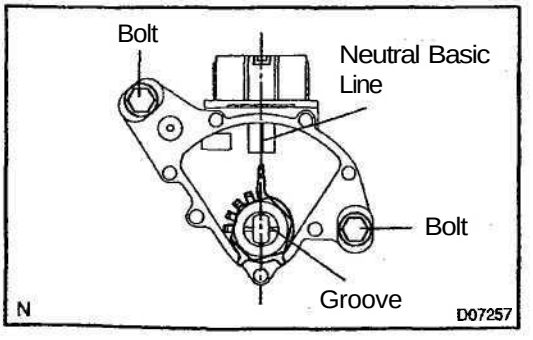

(3) Hold in position and tighten the bolt.
Torque: 5.4 N·m (55 kgf·cm, 48 in·lbf)
For continuity inspection of the park/neutral position switch, see page DI–202.

(g) Check the idle speed.
Idle speed: 650 ± 50 rpm
(In N position and air conditioner OFF)

7. MECHANICAL SYSTEM TESTS

(a) Measure the stall speed.
The object of this test is to check the overall performance of the transaxle and engine by measuring the stall speeds in the D and R positions.

NOTICE:

- **Do the test at normal operating fluid temperature 50 - 80 °C (122 – 176 °F).**
- **Do not continuously run this test longer than 10 seconds.**
- **To ensure safety, conduct this test in a wide, clear level area which provides good traction.**
- **The stall test should always be carried out in pairs. One technician should observe the conditions of wheels or wheel stoppers outside the vehicle while the other is doing the test.**

(1) Chock the 4 wheels.
(2) Connect an OBD II scan tool or TOYOTA hand–held tester to DLC3.
(3) Fully apply the parking brake.
(4) Keep your left foot pressed firmly on the brake pedal.
(5) Start the engine.
(6) Shift into the D position. Press all the way down on the accelerator pedal with your right foot. Quickly read the stall speed at this time.
Stall speed: 2,370 ± 150 rpm

Evaluation:

Problem	Possible cause
(a) Stall speed low in D and R positions	• Engine output may be insufficient • Stator one–way clutch is operating properly HINT: If more than 600 rpm below the specified value, the torque converter clutch could be faulty.
(b) Stall speed high in D position	• Line pressure too low • Forward clutch slipping • No.2 one–way clutch not operating properly •O/D clutch slipping
(c) Stall speed high in R position	• Line pressure too low • Direct clutch slipping • 1st & reverse brake slipping •O/D clutch slipping
(d) Stall speed high in D and R positions	• Line pressure too low • Improper fluid level • O/D one–way clutch not operating properly

(b) Measure the time lag.
When the shift lever is shifted while the engine is idling, there will be a certain time lapse or lag before the shock can be felt. This is used for checking the condition of the O/D direct clutch, forward clutch, and 1st & reverse brake.

NOTICE:

- **Do the test at normal operating fluid temperature 50 - 80 °C (122 – 176 °F).**
- **Be sure to allow 1 minute interval between tests.**
- **Take 3 measurements and take the average value.**

(1) Connect an OBD II scan tool or TOYOTA hand–held tester to DLC3.

(2) Fully apply the parking brake.
(3) Start the engine and check idle speed.

Idle speed: 650 ± 50 rpm (In N position and air conditioner OFF)

(4) Shift the shift lever from N to D position. Using a stop watch, measure the time from when the lever is shifted until the shock is felt.

Time lag: N → D Less than 1.2 seconds

(5) In the same manner, measure the time lag for N → R.

Time lag: N → R Less than 1.5 seconds

Evaluation (If N → D time or N → R time lag is longer than specified):

Problem	Possible cause
N → D time lag is longer	• Line pressure too low • Forward clutch worn • O/D one–way clutch not operating
N → R time lag is longer	• Line pressure too low • Direct clutch worn • 1st & reverse brake worn • O/D one–way clutch not operating properly

8. HYDRAULIC TEST

Measure the line pressure.

NOTICE:

- **Do the test at normal operation fluid temperature 50 - 80 °C (122 – 176 °F)**
- **The line pressure test should always be carried out in pairs. One technician should observe the conditions of wheels or wheel stoppers outside the vehicle while the other is doing the test.**
- **Be careful to prevent SST's hose from interfering with the exhaust pipe.**

(1) Warm up the ATF.
(2) Remove the test plug on the transaxle case front left side and connect SST.
(See page AX–30 for the location to connect SST)

SST 09992–00095 (09992–00231, 09992–00271)

(3) Fully apply the parking brake and chock the 4 wheels.
(4) Connect an OBD II scan tool or TOYOTA hand–held tester to DLC3.
(5) Start the engine and check idling speed.
(6) Keep your left foot pressed firmly on the brake pedal and shift into D position.
(7) Measure the line pressure when the engine is idling.
(8) Depress the accelerator pedal all the way down. Quickly read the highest line pressure when engine speed reaches stall speed.
(9) In the same manner, do the test in R position.

Specified line pressure:

Condition	D position kPa (kgf/cm², psi)	R position kPa (kgf/cm², psi)
Idling	372 – 412 (3.8 – 4.2, 54 – 59)	672 - 742 (6.9 - 7.6, 97 - 107)
Stall	931 - 1,031 (9.5 – 10.5, 134 – 149)	1,768 – 1,968 (18.0 – 20.1, 255 – 284)

Evaluation:

Problem	Possible cause
If the measured values at all position are higher	• Throttle valve defective • Regulator valve defective
If the measured values at all position are lower	• Throttle valve defective • Regulator valve defective • Oil pump defective • O/D direct clutch defective
If pressure is low in the D position only	• D position circuit fluid leakage • Forward clutch defective
If pressure is low in the R position only	• R position circuit fluid leakage • Direct clutch defective • 1st & reverse brake defective

9. MANUAL SHIFTING TEST

HINT:

With this test, it can be determined whether the trouble is within the electrical circuit or is a mechanical problem in the transaxle.

(a) Disconnect the solenoid wire.

(b) Inspect the manual driving operation.

Check that the shift and gear positions correspond with the table below.

While driving, shift through the L, 2 and D positions. Check that the gear change corresponds to the shift position.

Shift Position	Gear Position
D	O/D
2	O/D
L	1st
R	Reverse
P	Pawl Lock

HINT:

If the L, 2 and D position gear positions are difficult to positions are difficult to distinguish, do the following read test.

If any abnormality is found in the above test, the problem is in the transaxle itself.

(c) Connect the solenoid wire.

(d) Cancel out DTC (See page DI-157).

D14ZD-02

DIAGNOSTIC TROUBLE CODE CHART

If a DTC is displayed during the DTC check, check the circuit listed for that code in the table below and proceed to the page given.

* : –...MIL does not light /●...MIL light up

DTC No. (See Page)	Detection Item	Trouble Area	MIL*	Memory
P0500 (DM75)	Vehicle Speed Sensor Malfunction	• Open or short in vehicle speed sensor circuit • Vehicle speed sensor • Combination meter • ECM • Automatic transaxle assembly	–	O
P0710 (DM79)	Transmission Fluid Temperature Sensor Malfunction	• Open or short in ATF temperature sensor circuit • ATF temperature sensor • ECM	–	O
P0750 (DM81)	Shift Solenoid A Malfunction (Shift Solenoid Valve SL1)	• Shift solenoid valve SL1 is stuck open or closed • Valve body is blocked up or stuck	–	O
P0753 (DM83)	Shift Solenoid A Electrical Malfunction (Shift Solenoid Valve SL1)	• Open or short in shift solenoid valve SL1 circuit • Shift solenoid valve SL1 • ECM	–	O
P0755 (DM81)	Shift Solenoid B Malfunction (Shift Solenoid Valve SL2)	• Shift solenoid valve SL2 is stuck open or closed • Valve body is blocked up or stuck	–	O
P0758 (DM83)	Shin Solenoid B Electrical Malfunction (Shift Solenoid Valve SL2)	• Open or short in shift solenoid valve SL2 circuit • Shift solenoid valve SL2 • ECM	–	O
P0765 (DM81)	Shift Solenoid D Malfunction (Shift Solenoid Valve S4)	• Shift solenoid valve S4 is stuck open or closed • Valve body is blocked up or stuck	–	O
P0768 (DM83)	Shift Solenoid D Electrical Malfunction (Shift Solenoid Valve S4)	• Open or short in shift solenoid valve S4 circuit • Shift solenoid valve S4 • ECM	–	O
P0770 (DM89)	Shift Solenoid E Malfunction (Shift Solenoid Valve DSL)	• Shift solenoid valve DSL is stuck open or closed • Valve body is blocked up or stuck • Lock–up clutch	–	O
P0773 (DM91)	Shift Solenoid E Electrical Malfunction (Shift Solenoid Valve DSL)	• Open or short in shift solenoid valve DSL circuit • Shift solenoid valve DSL • ECM	–	O
P1520 (DM94)	Stop Light Switch Circuit	• Open or short in stop light switch circuit • Stop light switch • ECM	–	O
P1725 (DM95)	NT Revolution Sensor Circuit Malfunction (Input Turbine Speed Sensor)	• Open or short in input turbine speed sensor circuit • Input turbine speed sensor • ECM	–	O
P1730 (DM97)	NC Revolution Sensor Circuit Malfunction (Counter Gear Speed Sensor)	• Open or short in counter gear speed sensor circuit • Counter gear speed sensor • ECM	–	O
P1760 (DM99)	Linear Solenoid for Accumulator Pressure Control Circuit Malfunction (Shift Solenoid Valve SLT)	• Open or short in shift solenoid valve SLT circuit • Shift solenoid valve SLT • ECM	–	O
P1780 (DI–202)	Park/Neutral Position Switch Malfunction	• Short in park/neutral position switch circuit • Park/neutral position switch • ECM	–	O

DI9OX-01

PARTS LOCATION

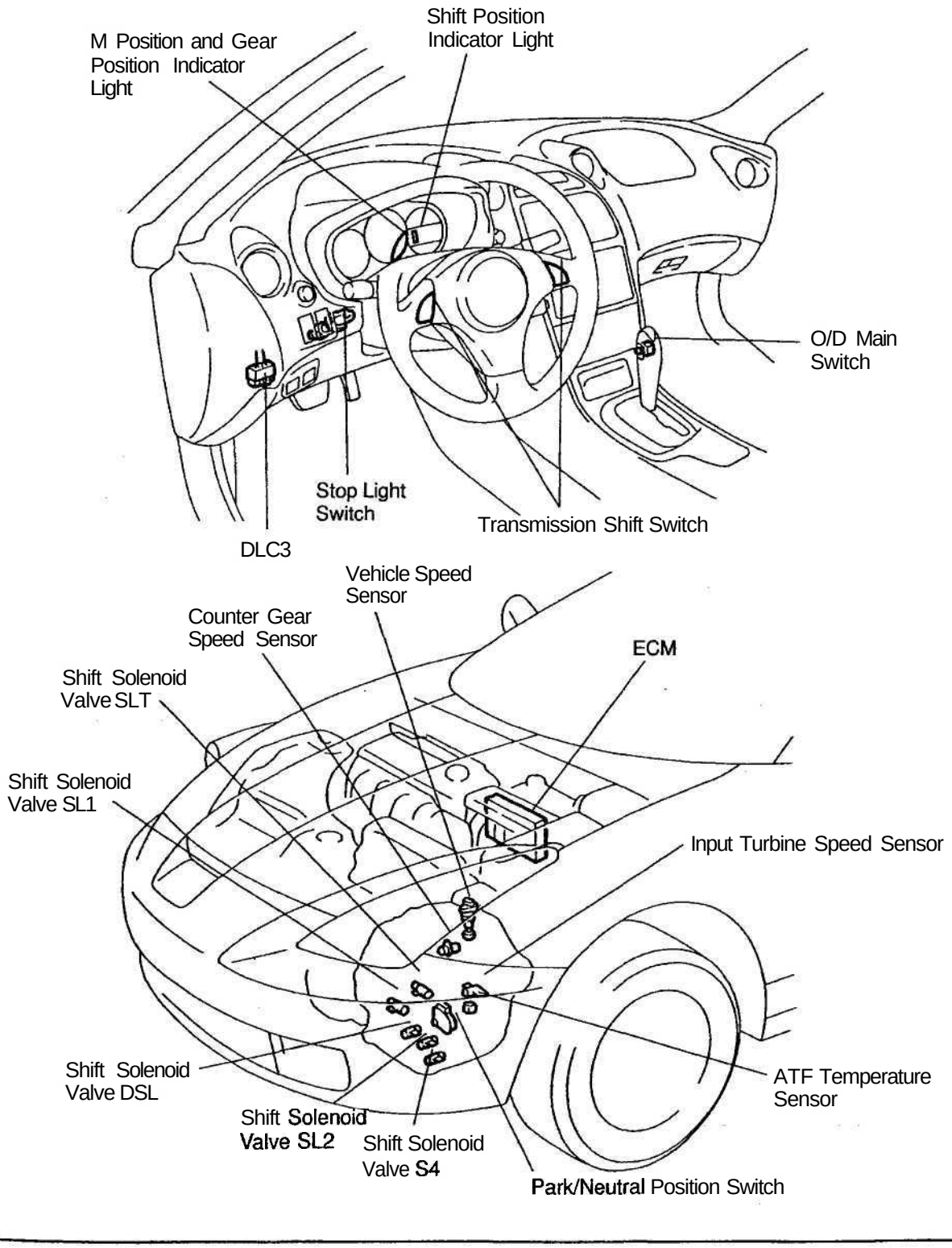

DI4ZO-03

TERMINALS OF ECM

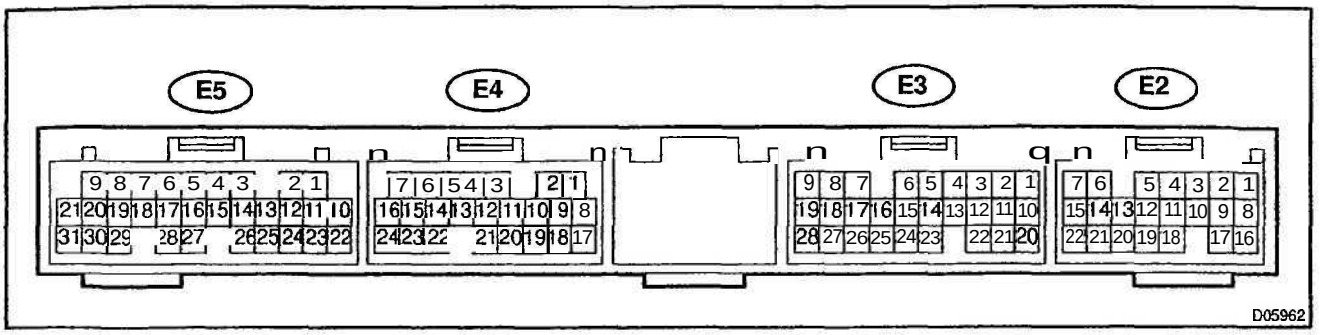

Symbols (Terminals No.)	Wiring Color	Condition	STD Voltage (V)
SL1+ (E5-7) ↔ SL1- (E5-9)	G ↔ V	IG ON	10-14
		1 st or 2nd gear	10-14
		3rd or O/D gear	Below 1
SL2+ (E5-8) ↔ SL2- (E5-20)	BR-Y ↔ O	IG ON	Below 1
		1st or 2nd gear	10-14
		3rd or O/D gear	Below 1
DSL (E5-19) ↔ Body ground	G-W ↔ Body ground	IG ON	Below 1
		Vehicle driving under lock-up position	10-14
NC+ (E5-14) ↔ NO (E5-26)	P-B ↔ G-W	Engine is running	Pulse signal is output Below 1 ↔ 4 - 5
NT+ (E5-16) ↔ NT- (E5-15)	W-L ↔ B	Engine is running	Pulse signal is output Below 1 ↔ 4 - 5
SLT+ (E5-6) ↔ SLT- (E5-5)	Y-R ↔ Y-G	IG ON	10-14
OD1 (E3-1) ↔ E1 (E4-17)	B ↔ BR	IG ON	5 - 6
ODLP (E3-19) ↔ E1 (E4-17)	BR-Y ↔ BR	O/D main switch ON	10-14
		O/D main switch OFF	Below 1
L (E4-9) ↔ E1 (E4-17)	Y-B ↔ BR	IG ON and Shift lever L position	10-14
		IG ON and Shift lever other than L position	Below 1
2 (E4-19) ↔ E1 (E4-17)	L-Y ↔ BR	IG ON and Shift lever 2 position	10-14
		IG ON and Shift lever other than 2 position	Below 1
R (E3-2) ↔ E1 (E4-17)	R-B ↔ BR	IG ON and Shift lever R position	10-14
		IG ON and Shift lever other than R position	Below 1
D (E3-24) ↔ E1 (E4-17)	L-W ↔ BR	IG ON and Shift lever D position	10-14
		IG ON and Shift lever other than D position	Below 1
N (E4-8) ↔ E1 (E4-17)	P-L ↔ BR	IG ON and Shift lever P or N position	10-14
		IG ON and Shift lever other than P or N position	Below 1
THO (E4-13) ↔ E2 (E4-18)	GR-L ↔ BR	IG ON and ATF temperature 110 °C (230 °F)	Below 1
S4 (E5-29) ↔ E1 (E4-17)	Y ↔ BR	IG ON	Below 1
		IG ON and O/D gear	10-14
P (E4-20) ↔ E1 (E4-17)	P ↔ BR	IG ON and Shift lever P position	10-14
		IG ON and Shift lever other P position	Below 1
SFTU (E2-9) ↔ E1 (E4-17)	L ↔ BR	IG ON and "UP" transmission shift switch pressed	Below 1
		IG ON and "UP" transmission shift switch repressed	10-14

SFTD (E2-17) ↔ E1 (E4-17)	P ↔ BR	IG ON and "Down" transmission shift switch pressed	Below 1
		IG ON and "Down" transmission shift switch repressed	10-14
SPD (E3-22) ↔ E1 (E4-17)	W-R ↔ BR	IG ON and Vehicle stationary	Below 1
		IG ON and Turn one front wheel slowly	Pulse signal is output Below 1 ↔ 4 - 6
ODMS (E2-5) ↔ E1 (E4-17)	BR-Y ↔ BR	IG ON	Below 1
		IG ON and Press continuously O/D main switch	10-14

DI501-02

PROBLEM SYMPTOMS TABLE

If a normal code is displayed during the diagnostic trouble code check but the trouble still occurs, check the circuits for each symptom in the order given in the charts on the following pages and proceed to the page given for troubleshooting.

The Matrix Chart is divided into 3 chapters.

Chapter 1: Electronic circuit matrix chart

Chapter 2: On–vehicle repair matrix chart

Chapter 3: Off-vehicle repair matrix chart

If the instruction "Proceed to next circuit inspection shown on matrix chart" is given in the flow chart for each circuit, proceed to the circuit with the next highest number in the table to continue the check.

If the trouble still occurs even though there are no abnormalities in any of the other circuits, then check and replace the ECM.

Chapter 1: Electronic circuit matrix chart

Symptom	Suspect Area	See page
No up–shift (A particular gear, from 1st to 3rd gear, is not up–shifted)	ECM	IN–30
No up–shift (3rd → O/D)	1. O/D main switch circuit 2. O/D cancel signal circuit 3. ECM	DI–206 DI–209 IN–30
No down–shift (O/D → 3rd)	ECM	IN–30
No down–shift (A particular gear, from 3rd to 1st gear, is not down–shifted)	ECM	IN–30
No lock–up or No lock–up off	ECM	IN–30
Shift point too high or too low	ECM	IN–30
Up–shift to 2nd while in L position	ECM	IN–30
Up–shift to 3rd while in 2 position	ECM	IN–30
Up–shift to O/D from 3rd while O/D main switch is OFF	1. O/D main switch circuit 2. ECM	DI–206 IN–30
Up–shift to O/D from 3rd white engine is cold	ECM	IN–30
Harsh engagement (N → D)	ECM	IN–30
Harsh engagement (Lock–up)	ECM	IN–30
Harsh engagement (Any driving position)	ECM	IN–30
Poor acceleration	ECM	IN-30
Engine stalls when starting off or stopping	ECM	IN–30
No E–shift system	1. Transmission shift main switch circuit 2. Transmission shift switch circuit 3. ECM	DI–216 DI–212 IN-30

Chapter 2: On-vehicle repair
(★: U240E automatic transaxle repair manual Pub. No. RM740U)

Symptom	Suspect Area	See page
Vehicle does not move in any forward position and reverse position	1. Manual valve 2. Primary regulator valve 3. Off-vehicle repair matrix chart	★ ★ –
Vehicle does not move in R position	Off-vehicle repair matrix chart	–
No up-shift (1st → 2nd)	1. 1–2 shift valve 2. Off-vehicle repair matrix chart	★ –
No up-shift (2nd → 3rd)	1. 2–3 shift valve 2. Off-vehicle repair matrix chart	★ –
No up-shift (3rd → O/D)	1. 3–4 shift valve 2. Off-vehicle repair matrix chart	★ –
No down-shift (O/D → 3rd)	3–4 shift valve	★
No down-shift (3rd → 2nd)	2–3 shift valve	★
No down-shift (2nd → 1st)	1–2 shift valve	★
No lock-up or No lock-up off	1. Lock-up relay valve 2. Off-vehicle repair matrix chart	★ –
Harsh engagement (N → D)	1. C_1 accumulator 2. Off-vehicle repair matrix chart	★ –
Harsh engagement (N → R)	1. C_2 accumulator 2. Off-vehicle repair matrix chart	★
Harsh engagement (Lock-up)	1. Lock-up relay valve 2. Off-vehicle repair matrix chart	★ –
Harsh engagement (2nd → 3rd)	C_2 accumulator	★
Harsh engagement (3rd → O/D)	B_0 accumulator	★
Harsh engagement (O/D → 3rd)	1. C_0 accumulator 2. B_0 accumulator	★ ★
Slip or shudder (Forward and reverse)	1. Oil strainer 2. Off-vehicle repair matrix chart	★ –
No engine braking (1st: L position)	Off-vehicle repair matrix chart	–
No engine braking (2nd: 2 position)	Off-vehicle repair matrix chart	–
No kick-down	1. 1–2 shift valve 2. 2-3 shift valve 3. 3–4 shift valve	★ ★ ★

Chapter 3: Off-vehicle repair
(A: U240E automatic transaxle repair manual Pub. No. RM740U)

Symptom	Suspect Area	See page
Vehicle does not move in any forward position and reverse position	1. Front and rear planetary gear 2. U/D planetary gear 3. U/D one-way clutch (F_2) 4. Forward clutch (C_1) 5. U/D brake (B_3)	★ ★ ★ ★
Vehicle does not move in R position	1. Front and rear planetary gear unit 2. U/D planetary gear unit 3. Direct clutch (C_2) 4. U/D brake (C_3) 5. 1st & reverse brake (B_2)	★ *if* ★ ★
No up-shift (1st → 2nd)	1. No. 1 one-way clutch (F_1) 2. 2nd brake (B_1)	★
No up-shift (2nd → 3rd)	Direct clutch (C_2)	★
No up-shift (3rd → O/D)	U/D clutch (C_3)	★
No lock-up or No lock-up off	Torque converter clutch	AX-36
Harsh engagement (N → D)	1. Forward clutch (C_1) 2. U/D one-way clutch (F_2) 3. No. 1 one-way clutch (F_1)	★ *if* ★
Harsh engagement (N → R)	1. Direct clutch (C_2) 2. 1st & reverse brake (B_2)	★
Harsh engagement (Lock-up)	Torque converter clutch	AX-36
Slip or shudder (Forward position: After warm-up)	1. Torque converter clutch 2. Forward clutch (C_1) 3. Direct clutch (C_2) 4. U/D brake (C_3) 5. No. 1 one-way clutch *(Ft)* 6. U/D one-way clutch (F_2)	AX-36 *if* *if* *if* *if* *if*
Slip or shudder (R position)	1. Direct clutch (C_2) 2. 1st & reverse brake (B_2)	★
Slip or shudder (1st)	No. 1 one-way clutch (F_1)	★
Slip or shudder (2nd)	1. U/D one-way clutch (F_2) 2. 2nd brake (B_1)	*if* *if*
Slip or shudder (3rd)	Direct clutch (C_2)	*if*
Slip or shudder (O/D)	U/D clutch (C_3)	*if*
No engine braking (1 st - 3rd: D position)	U/D brake (B_3)	*if*
No engine braking (1 st: L position)	1 st & reverse brake (B_2)	*if*
No engine braking (2nd: 2 position)	2nd brake (B_1)	*if*
Poor acceleration (All position)	1. Torque converter clutch 2. U/D planetary gear	AX-36 ★
Poor acceleration (O/D)	1. U/D clutch (C_3) 2. U/D planetary gear	*if* *if*
Large shift shock or engine stalls when starting off or stopping	Torque converter clutch	AX-36

D167U-04

CIRCUIT INSPECTION

DTC	P0500	Vehicle Speed Sensor Malfunction

CIRCUIT DESCRIPTION

The vehicle speed sensor outputs a 4-pulse signal for every revolution of the transaxle output shaft. After this signal is converted into a more precise rectangular wave form by the wave form shaping circuit inside the combination meter, it is then transmitted to the ECM.

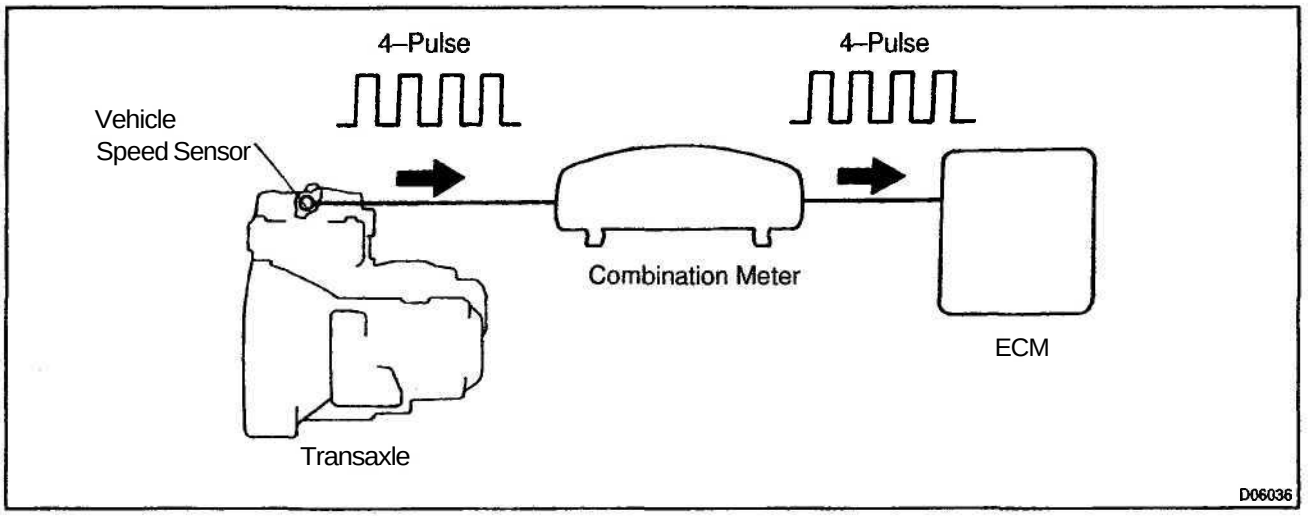

DTC No.	DTC Detecting Condition	Trouble Area
P0500	When all of the following conditions continues for 1 sec. or more: 1. After the ignition switch is turned on, 0.5 second or more elapses. 2. Counter gear rpm is equal to or greater then vehicle speed. 3. Vehicle speed sensor signal can not be input to the ECM. 4. The condition that engine coolant temp. is 20 "C or more (no error in engine coolant temp. sensor circuit is detected) and the park/neutral position switch is set to P or N continues for 2 for. or more, or the condition that engine coolant temp. is less than 20 °C (an error in engine coolant temp. sensor circuit is detected) and the park/neutral position switch is set to P or N continues for 30 sec. or more.	• Combination meter • Open or short in vehicle speed sensor circuit • Vehicle speed sensor • ECM • Automatic transaxle (clutch, brake or gear etc,)
	Clutch or brake slips or gear is broken	

WIRING DIAGRAM

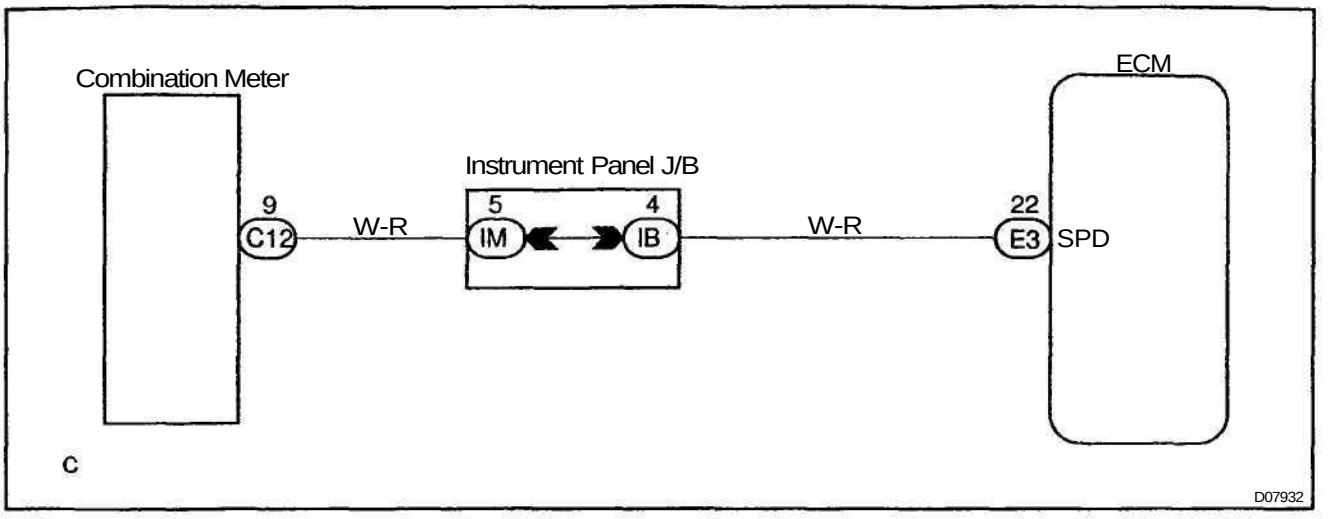

INSPECTION PROCEDURE

1	**Check operation of speedometer.**

HINT:
Read freeze frame data using TOYOTA hand-held tester or OBD II scan tool. Because freeze frame records the engine conditions when the malfunction is detected. When troubleshooting it is useful for determining whether the vehicle was running or stopped, the engine was warmed up or not, the air-fuel ratio was lean or rich, etc. at the time of the malfunction.

CHECK:

Drive the vehicle and check if the operation of the speedometer in the combination meter is normal.
HINT:
The vehicle speed sensor is operating normally if the speedometer display is normal.

NG → **Check speedometer (See page BE-2).**

OK

2	Check for short in harness and connector between terminal SPD of ECM connector and body ground.

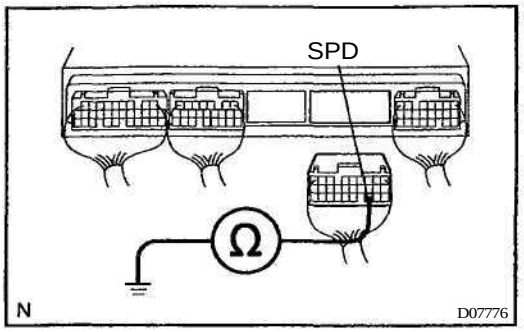

PREPARATION:
Disconnect the connector of the ECM.
CHECK:
Check continuity between terminal SPD of the ECM connector and body ground.
OK:
No continuity (1M Ω or higher)

NG → **Repair or replace harness or connector.**

OK

3	Check voltage between terminal SPD of ECM connector and body ground.

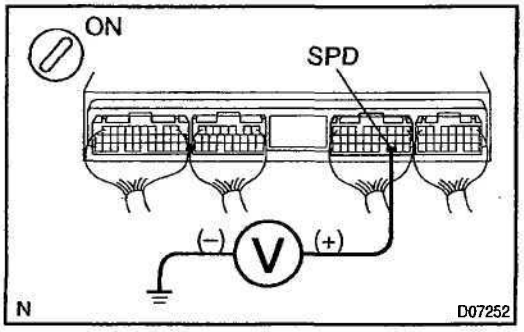

PREPARATION:
Turn ignition switch ON.
CHECK:
Measure voltage between terminal SPD of ECM connector and body ground.
OK:
Voltage: 9 – 14 V

NG → **Check for open in harness and connector between J/B No. 1 and ECM (See page IN–30).**

OK

4	Check for open in harness and connector between J/B No. 1 and combination meter (See page IN–30).

NG → **Repair or replace harness or connector.**

OK

5	Check **ECM** (See page **IN–20**).

NG → Replace ECM.

OK

Check and repair transaxle (clutch, brake or gear etc.).

DTC	P0710	Transmission Fluid Temperature Sensor Malfunction (ATF Temperature Sensor)

CIRCUIT DESCRIPTION

The ATF temperature sensor converts fluid temperature into a resistance value which is input into the ECM.

DTC No.	DTC Detecting Condition	Trouble Area
P0710	Either (a) or (b) is detected for 0.5 sec. or more. (1–trip detection logic) (a) Temp. sensor resistance is less than 79 Ω. (b) After the engine has been operating for 15 minutes or more, the resistance at the temp. sensor is more than 156 kΩ.	• Open or short in ATF temp. sensor • ATF temp. sensor • ECM

WIRING DIAGRAM

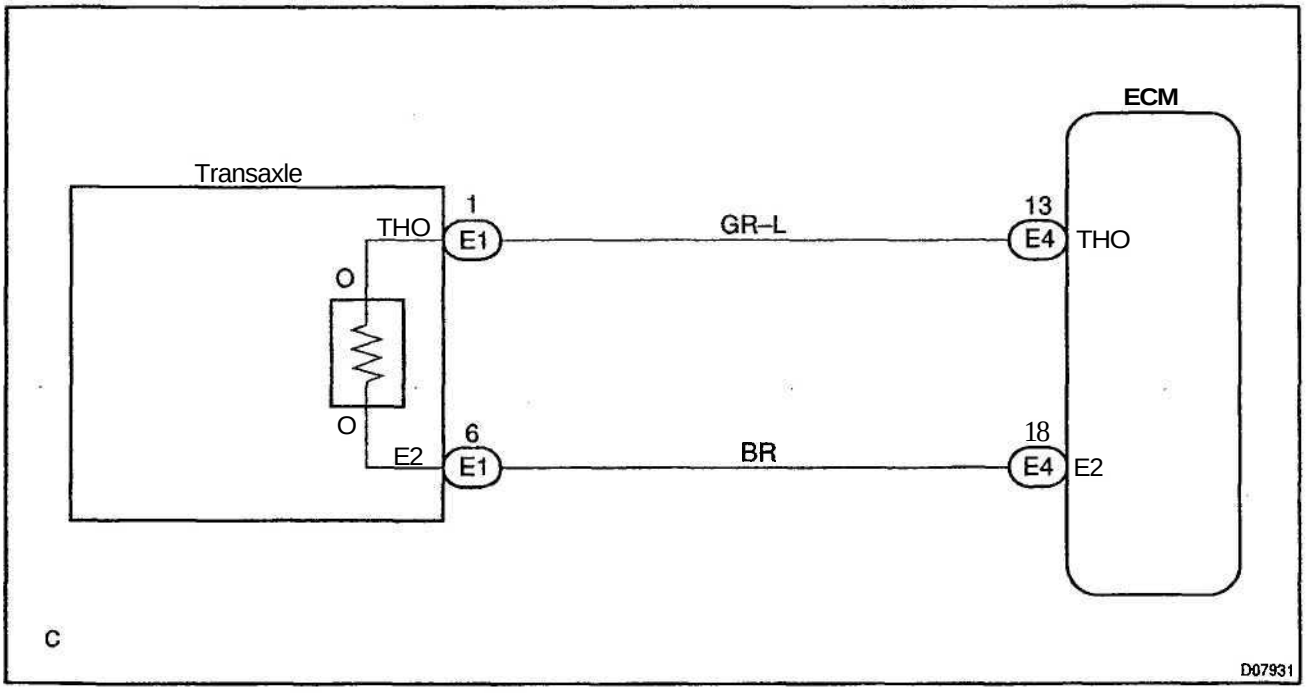

INSPECTION PROCEDURE

1	Check ATF temperature sensor.

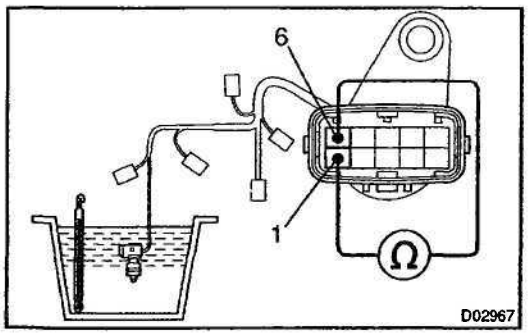

PREPARATION:

(a) Disconnect the solenoid wire connector.
(b) Remove the oil pan.
(c) Disconnect all solenoid valve connectors.
(d) Remove the transmission wire harness.

CHECK:

Measure resistance between terminals 1 and 6 of solenoid connector at 25 °C (77 °F) and 110 °C (230 °F).

OK:

Resistance (Approx.):
25 °C (77 °F): 3.5 kΩ
110 °C (230 °F): 231 - 263 Ω

NG → **Replace the ATF temperature sensor (transmission wire).**

OK

2	Check harness and connector between ATF temperature sensor and ECM (See page IN–30).

NG → **Repair or replace the harness or connector.**

OK

Check and replace the ECM (See page IN–30).

DTC	P0750	Shift Solenoid A Malfunction (Shift Solenoid Valve SL1)

DTC	P0755	Shift Solenoid B Malfunction (Shift Solenoid Valve SL2)

DTC	P0765	Shift Solenoid D Malfunction (Shift Solenoid Valve S4)

SYSTEM DESCRIPTION

The ECM uses signals from the vehicle speed sensor to detect the actual gear position (1 st, 2nd, 3rd or O/D gear).

Then the ECM compares the actual gear with the shift schedule in the ECM memory to detect mechanical trouble of the shift solenoid valves and valve body.

DTC No.	DTC Detecting Condition	Trouble Area
P0750 P0755 P0765	During normal driving, the gear required by the ECM does not match the actual gear (2-trip detection logic)	• Shift solenoid valve SL1/SL2/S4 is stuck open or closed • Valve body is blocked up or stuck

HINT:

Check the shift solenoid valve SL1 when DTC P0750 is output, check the shift solenoid valve SL2 when DTC P0755 is output and check shift solenoid S4 when DTC P0765 is output.

INSPECTION PROCEDURE

1	**Check shift solenoid valve SL1, SL2 or S4 operation.**

Shift solenoid valve SL1 and SL2

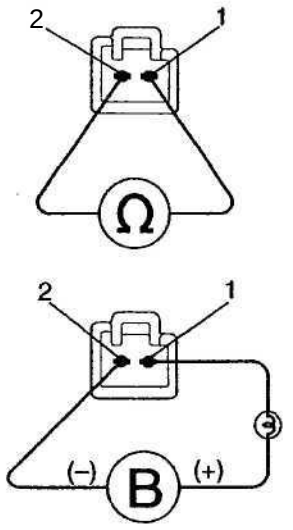

Shift solenoid valve S4

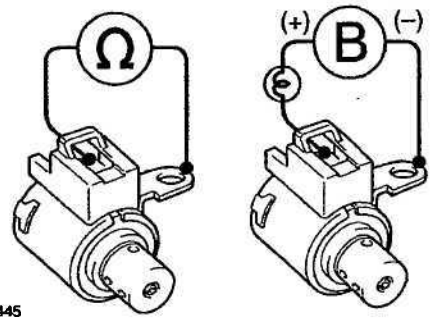

D03445
D03446
D03424 D03423
D03724

PREPARATION:

(a) Jack up the vehicle.
(b) Remove the oil pan.
(c) Remove the shift solenoid valve SL1, SL2 or S4.

CHECK:

Check Solenoid Resistance:

(a) Shift solenoid valve SL1 or SL2:
Measure resistance between terminals 1 and 2 of solenoid connector.

(b) Shift solenoid valve S4:
Measure resistance between terminal 1 of solenoid connector and solenoid body.

Check Solenoid Operation:

(a) Shift solenoid valve SL1 or SL2:
Connect the positive (+) lead with an 23–W bulb to terminal 1 and the negative (–) lead to terminal 2 of solenoid connector, then check the movement of the valve.

(b) Shift solenoid valve S4:
Connect the positive (+) lead with an 23–W bulb to terminal 1 of solenoid connector and the negative (–) lead to the solenoid valve body, then check the movement of the valve.

OK:

(a) Resistance: 5.1 - 5.5 Ω
(b) The shift solenoid valve makes operation noise.

NG	**Replace the shift solenoid valve SL1, SL2 or S4.**

OK

Check the valve body (See page DI–172).

DTC	P0753	Shift Solenoid A Electrical Malfunction (Shift Solenoid Valve SL1)

DTC	P0758	Shift Solenoid B Electrical Malfunction (Shift Solenoid Valve SL2)

DTC	P0768	Shift Solenoid D Electrical Malfunction (Shift Solenoid Valve S4)

CIRCUIT DESCRIPTION

Shifting from 1 st to O/D is performed in combination with ON and OFF of the shift solenoid valves SL1 and SL2 controlled by ECM. If an open or short circuit occurs in either of the shift solenoid valves, the ECM controls the remaining normal shift solenoid valve to allow the vehicle to be operated smoothly (Fail safe function).

DTC No.	DTC Detecting Condition	Trouble Area
P0753 P0758	The ECM checks for an open or short circuit in the shift solenoid valves SL1 and SL2. (a) When the solenoid is energized, the duty ratio exceed 75 %. (b) When the solenoid is not energized, the duty ratio is less than 3 %.	• Open or short in shift solenoid valve SL1/SL2/S4 circuit • Shift solenoid valve SL1/SL2/S4 •ECM
P0768	The ECM checks for an open or short circuit in the shift solenoid valve S4 circuit when it changes. The ECM records DTC P0768 if condition (a) or (b) is detected. (a) When the solenoid is energized, the solenoid resistance is 8 Ω or less and is counted. (b) When the solenoid is not energized, the solenoid resistance is 100 kΩ or more and is counted.	

HINT:

Check the shift solenoid valve SL1 when DTC P0753 is output, check the shift solenoid valve SL2 when DTC P0758 is output and check the shift solenoid valve S4 when DTC P0768 is output.

Fail safe function:

If either of the shift solenoid valve circuits develops an open or short, the ECM turns the other shift solenoid ON and OFF to shift to the gear positions shown in the table below. The ECM also turns the shift solenoid valve DSL OFF at the same time. If both solenoids are malfunction, hydraulic control cannot be performed electronically and must be done manually.

Manual shifting as shown in the following table must be done (In the case of a short circuit, the ECM stops sending current to the short circuited solenoid).

NORMAL				SHIFT SOLENOID SL1 MALFUNCTIONING								SHIFT SOLENOID SL2 MALFUNCTIONING			
				Driving at 3rd or O/D				Driving at 1 st or 2nd							
Solenoid Valve			Gear	Solenoid Valve			Gear	Solenoid Valve			Gear	Solenoid Valve			Gear
SL1	SL2	S4		SL1	SL2	S4		SL1	SL2	S4		SL1	SL2	S4	
ON	ON	OFF	1st	X	ON ↓ OFF	OFF	3rd	X	ON	OFF	2nd	ON ↓ OFF	X	OFF	3rd
OFF	ON	OFF	2nd	X	ON ↓ OFF	OFF	3rd	X	ON	OFF	2nd	OFF	X	OFF	3rd
	OFF	OFF	3rd	X	OFF	OFF	3rd	X	T ON	T ON	3rd		X	OFF	3rd
	OFF	ON	O/D	X	OFF	ON	O/D	X	T ON	ON	3rd		X	ON	O/D

SHIFT SOLENOID S4 MALFUNCTIONING				SHIFT SOLENOID SL1 ANC SL2 MALFUNCTIONING				SHIFT SOLENOID SL1 AND S4 MALFUNCTIONING							
								Driving at 3rd or O/D				Driving at 1 st or 2nd			
Solenoid Valve			Gear	Solenoid Valve			Gear	Solenoid Valve			Gear	Solenoid Valve			Gear
SL1	SL2	S4		SL1	SL2	S4		SL1	SL2	S4		SL1	SL2	S4	
ON	ON	X	1st	X	X	OFF	3rd	X	ON ↓ OFF	X	3rd	X	ON	X	2nd
OFF	ON	X	2nd	X	X	OFF	3rd	X	ON ↓ OFF	X	3rd	X	ON	X	2nd
	OFF	X	3rd	X	X	OFF	3rd	X	OFF	X	3rd	X	T ON	X	2nd
	OFF	X	3rd	X	X	ON	O/D	X	OFF	X	3rd	X	OFF ↓ ON	X	2nd

SHIFT SOLENOID SL2 AND S4 MALFUNCTIONING				SHIFT SOLENOID SL1 , SL2 AND S4 MALFUNCTIONING			
Solenoid Valve			Gear	Solenoid Valve			Gear
SL1	SL2	S4		SL1	SL2	S4	
ON ↓ OFF	X	X	3rd	X	X	X	3rd
OFF	X	X	3rd	X	X	X	3rd
	X	X	3rd	X	X	X	3rd
	X	X	3rd	X	X	X	3rd

WIRING DIAGRAM

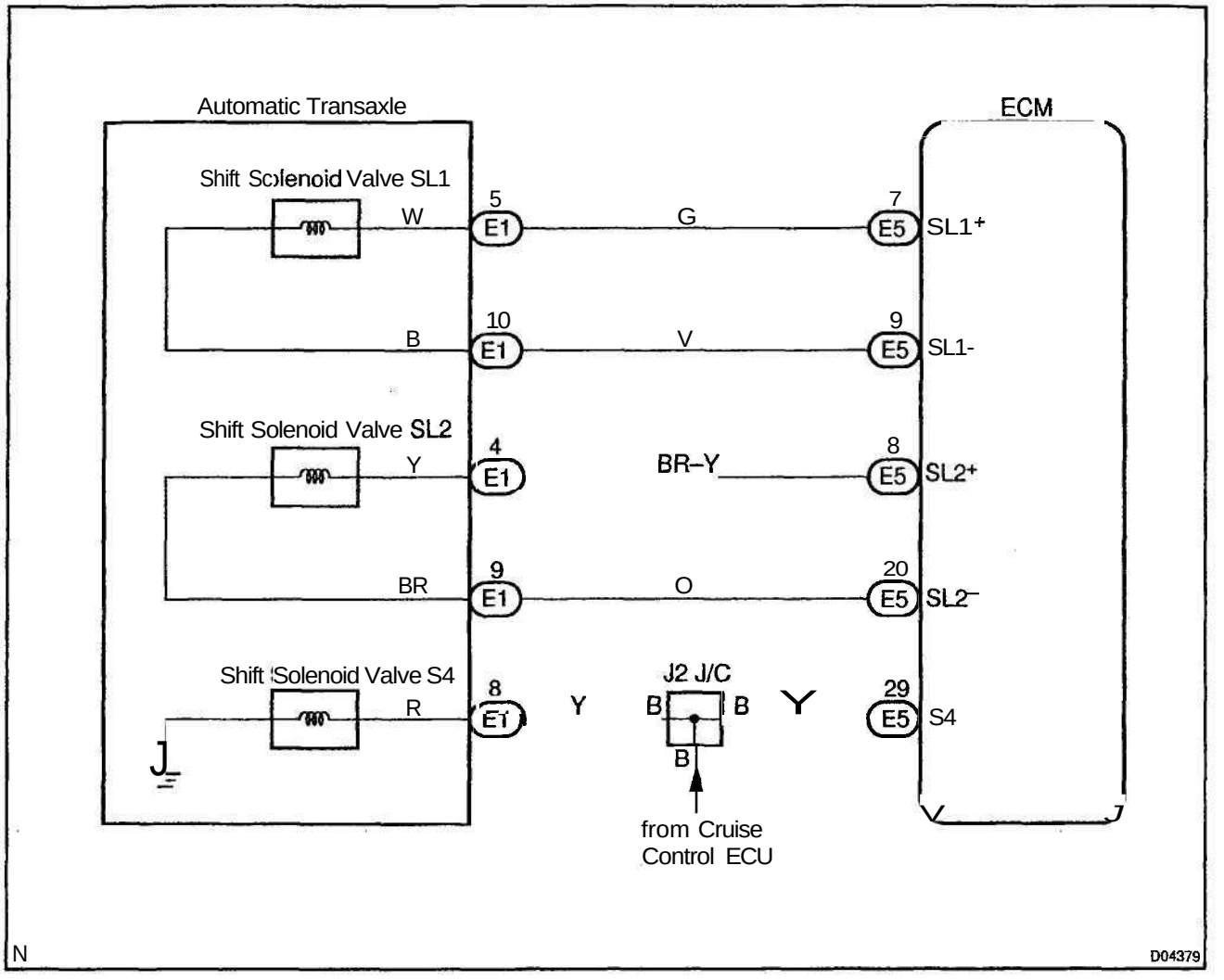

INSPECTION PROCEDURE

1	**Measure resistance between terminals of ECM.**

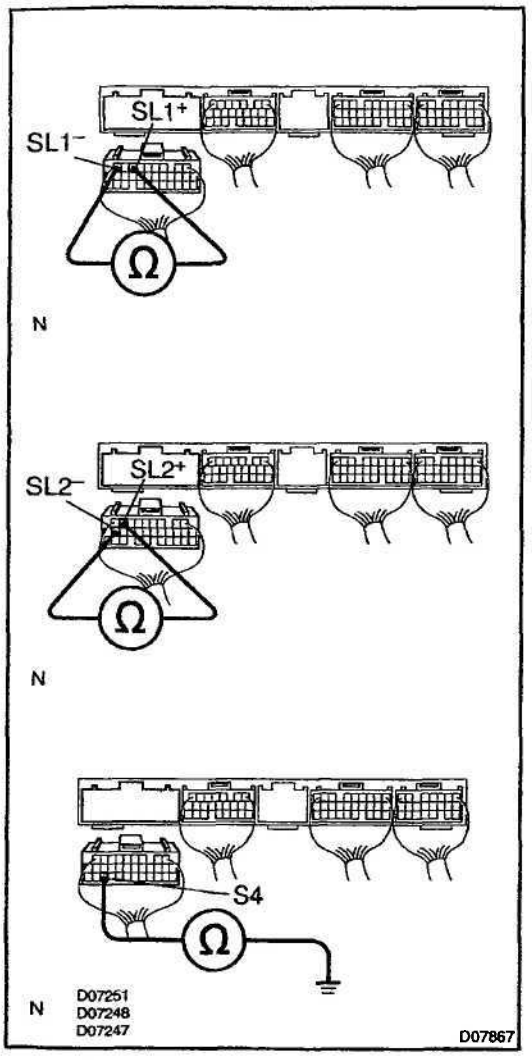

PREPARATION:

Disconnect the connector from ECM.

CHECK:

(a) Measure resistance between terminals **SL1+** and **SL1−** of ECM connector.

(b) Measure resistance between terminals **SL2+** and **SL2−** of ECM connector.

(c) Measure resistance between terminal **S4** of ECM connector and body ground.

OK:

Resistance:

(a) SL1+ - SL1-: 5.3 ± 0.2 Ω

(b) SL2+ - SL2−: 5.3 ± 0.2 Ω

(c) S4 - Body ground: 13 ± 2 Ω

OK	**Check and replace the ECM.**

NG

2	**Measure harness and connector between ECM and automatic transaxle solenoid connector.**

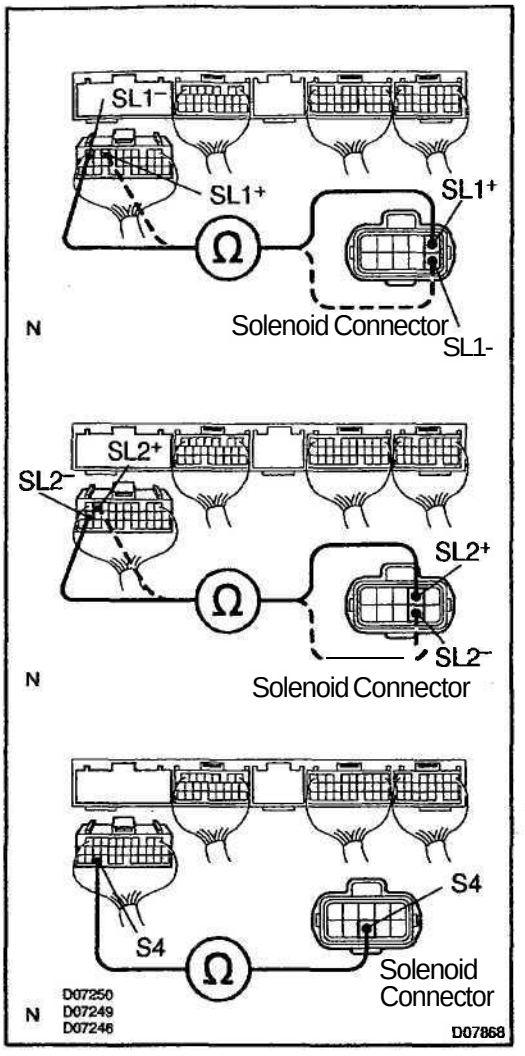

PREPARATION:

(a) Disconnect the solenoid connector from the automatic transaxle.

(b) Disconnect the connector from the ECM.

CHECK:

(a) Measure the harness and connector between terminal SL1+ or SL1− of ECM and terminal SL1+ or SL1− of solenoid connector.

(b) Measure the harness and connector between terminal SL2+ or SL2− of ECM and terminal SL2+ or SL2− of solenoid connector.

(c) Measure the harness and connector between terminal S4 of ECM and terminal S4 of solenoid connector.

OK:

Resistance: 0 Ω

NG	**Repair or replace the harness or connector.**

OK

3	Check shift solenoid valve SL1, SL2 or S4 (See page DM81).

NG → Replace the solenoid valve.

OK →

Repair or replace the solenoid wire, harness and connector between ECM and automatic transaxle solenoid connector.

DTC	P0770	Shift Solenoid E Malfunction (Shift Solenoid Valve DSL)

SYSTEM DESCRIPTION

The ECM uses the signals from the throttle position sensor, air-flow meter and crankshaft position sensor to monitor the engagement condition of the lock–up clutch.
Then the ECM compares the engagement condition of the lock–up clutch with the lock–up schedule in the ECM memory to detect mechanical trouble of the shift solenoid valve DSL, valve body and torque converter clutch.

DTC No.	DTC Detecting Condition	Trouble Area
P0770	Lock–up does not occur when driving in the lock–up range (normal driving at 80 km/h [50 mph]), or lock–up remains ON in the lock–up OFF range. (2–trip detection logic)	• Shift solenoid valve DSL is stuck open or closed • Valve body blocked up or stuck • Lock–up clutch

INSPECTION PROCEDURE

1	Check solenoid valve DSL operation.

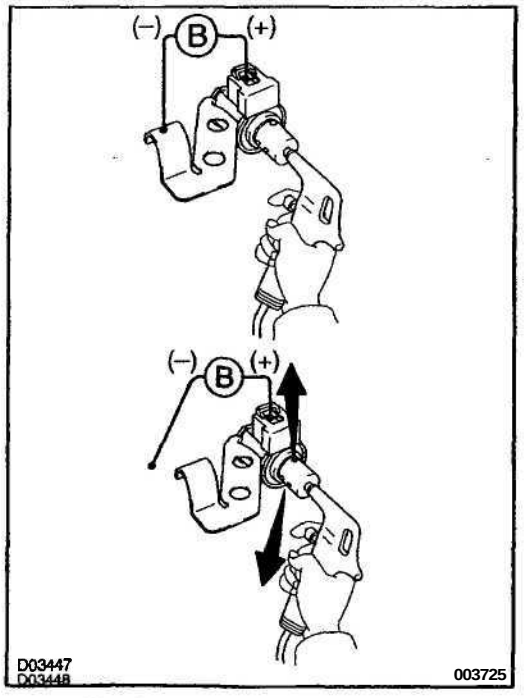

PREPARATION:
(a) Remove the oil pan.
(b) Remove the shift solenoid valve DSL.

CHECK:
(a) Applying 490 kPa (5 kgf/cm², 71 psi) of compressed air, check that the solenoid valve does not leak air.
(b) When battery positive voltage is supplied to the shift solenoid valve, check that the solenoid valve opens.

OK:

(a) Solenoid valve does not leak air.
(b) Solenoid valve opens.

NG → **Replace the solenoid valve DSL.**

OK

2	Check valve body (See page DM72).

NG → Repair or replace the valve body.

OK

Replace the torque converter clutch (See page AX–30).

DTC	P0773	Shift Solenoid E Electrical Malfunction (Shift Solenoid Valve DSL)

CIRCUIT DESCRIPTION

The shift solenoid valve DSL is turned ON and OFF by signals from the ECM to control the hydraulic pressure acting on the lock–up relay valve, which then controls operation of the lock–up clutch.

DTC No.	DTC Detecting Condition	Trouble Area
P0773	Either (a) or (b) are detected for 1 time. (2–trip detection logic) (a) Solenoid resistance is 8 Ω or less short circuit when solenoid is energized. (b) Solenoid resistance is 100 kΩ or more open circuit when solenoid is not energized.	• Open or short in shift solenoid valve DSL circuit • Shift solenoid valve DSL • ECM

Fail safe function:
If the ECM detects a malfunction, it turns the shift solenoid valve DSL OFF.

WIRING DIAGRAM

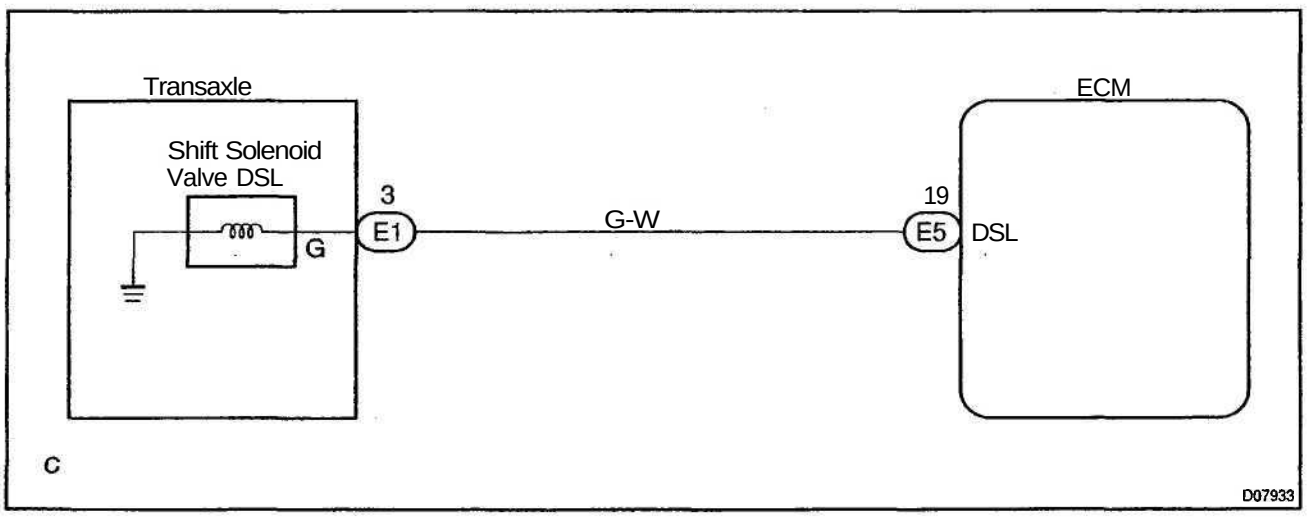

INSPECTION PROCEDURE

1	**Check harness and connector between ECM and automatic transaxle solenoid connector.**

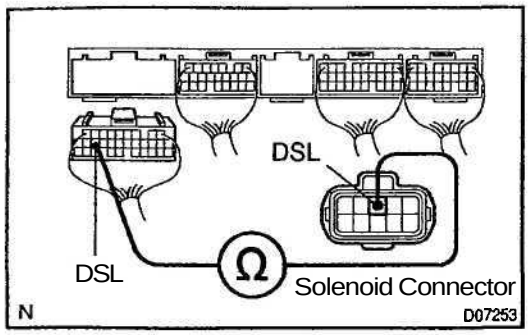

PREPARATION:

(a) Disconnect the solenoid connector from the transaxle.

(b) Disconnect the connector from the ECM.

CHECK:

Measure the harness and connector between terminal DSL of ECM and terminal DSL of solenoid connector.

OK:

There is continuity.

NG → **Repair or replace the harness or connector.**

OK

2	Check shift solenoid valve DSL.

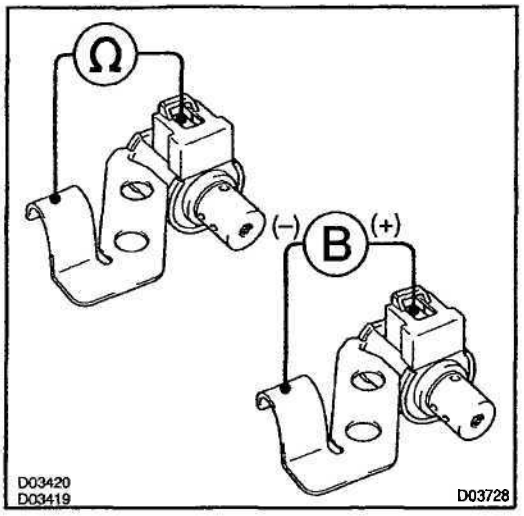

PREPARATION:

(a) Jack up the vehicle.
(b) Remove the oil pan.
(c) Disconnect the shift solenoid valve DSL connector.
(d) Remove the shift solenoid valve DSL.

CHECK:

(a) Measure resistance between terminal DSL of shift solenoid valve and solenoid body.
(b) Connect positive (+) lead to terminal of solenoid connector, negative (-) lead to solenoid body.

OK:

(a) Resistance: 11 – 15 Ω
(b) The shift solenoid valve DSL makes operation noise.

NG → **Replace the shift solenoid valve DSL.**

OK

Check and replace or repair the solenoid wire.

DI4Z1-03

DTC	P1520	Stop Light Switch Signal Malfunction

CIRCUIT DESCRIPTION

The purpose of this circuit is to prevent the engine from stalling, while driving in lock-up condition, when brakes are suddenly applied.
When the brake pedal is operated, this switch sends a signals to ECM. Then the ECM cancels operation of the lock-up clutch while braking is in progress.

DTC No.	DTC Detecting Condition	Trouble Area
P1520	No stop light switch signal to ECM during driving. (2-trip detection logic)	• Open or short in stop light switch circuit • Stop light switch •ECM

WIRING DIAGRAM

See page DI-130.

INSPECTION PROCEDURE

See page DI-130.

DTC	P1725	NT Revolution Sensor Circuit Malfunction (Input Turbine Speed Sensor)

CIRCUIT DESCRIPTION

This sensor detects the rotation speed of the input turbine. By comparing the input turbine speed signal (NT) and the counter gear speed sensor signal (NC), the ECM detects the shift timing of the gears and appropriately controls the engine torque and hydraulic pressure in response to various conditions, thus performing smooth gear shifting.

DTC No.	DTC Detecting Condition	Trouble Area
P1725	The ECM detects conditions (a), (b), (c), (d) and (e) continuity for 5 seconds or more. (1-trip detection logic) (a) Gear change not being performed (b) Gear position: 2nd, 3rd or O/D gear (c) Solenoid valves and park/neutral position switch are normal (d) T/M input shaft rpm: 300 rpm or less (e) T/M output shaft rpm: 1,000 rpm or less (a) Gear change not being performed (b) Gear position: 2nd, 3rd or O/D gear (c) Solenoid valves and park/neutral position switch are normal (d) T/M input shaft rpm: 300 rpm or less (e) T/M output shaft rpm: 1,000 rpm or less	• Open or short in input turbine (NT) speed sensor circuit • Input turbine (NT) speed sensor • ECM

WIRING DIAGRAM

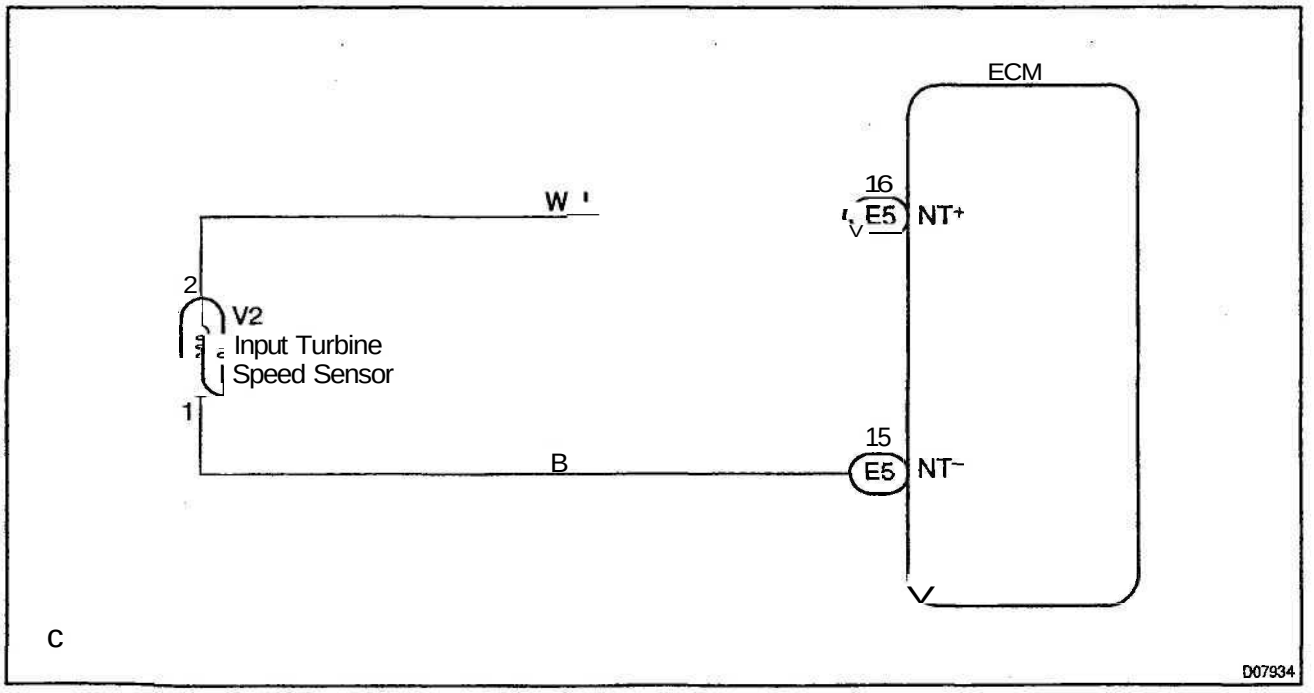

INSPECTION PROCEDURE

1	Check resistance between terminals NT+ and NT~ of ECM.

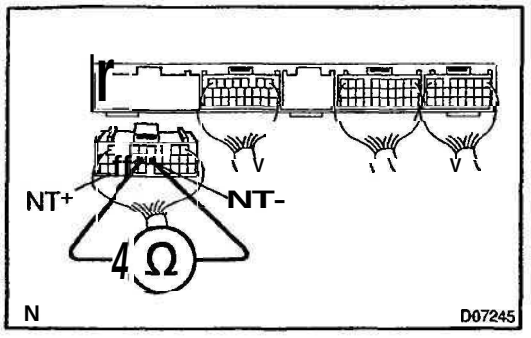

PREPARATION:
Disconnect the connector from ECM.
CHECK:
Check resistance between terminals NT+ and NT~ of ECM.
OK:
Resistance: 620 ± 60 Ω

OK	Check and replace the ECM (See page IN-30).

NG

2	Check NT revolution speed sensor.

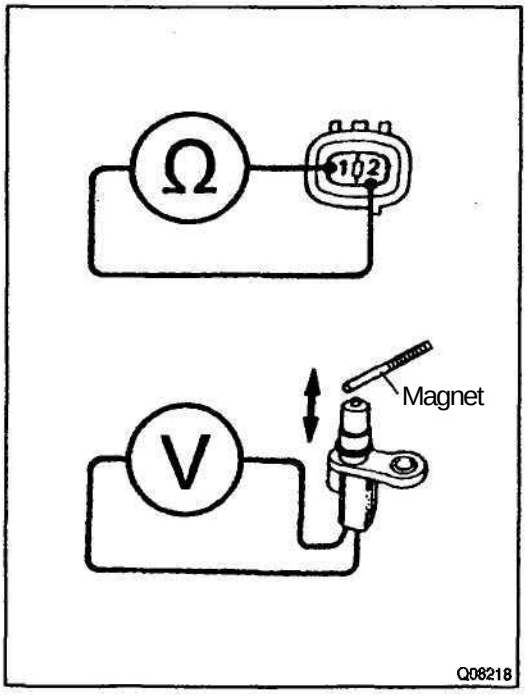

PREPARATION:
Remove the NT revolution speed sensor from transaxle.
CHECK:
(a) Measure resistance between terminals 1 and 2 of speed sensor.
(b) Check voltage between terminals 1 and 2 of the speed sensor when a magnet is put close to the front end of the speed sensor then taken away quickly.
OK:
(a) Resistance: 620 ± 60 Ω at 20 °C (68 °F)
(b) Voltage is generated intermittently.
HINT:
The voltage generated is extremely low.

NG	Replace the NT revolution speed sensor.

OK

Check and repair the harness and connector between ECM and NT revolution speed sensor (See page IN-30).

DTC	P1730	NC Revolution Sensor Circuit Malfunction (Counter Gear Speed Sensor)

CIRCUIT DESCRIPTION

This sensor detects the rotation speed of the counter gear. By comparing the counter gear speed signal (NC) and the input turbine speed sensor signal (NT), the ECM detects the shift timing of the gears and appropriately controls the engine torque and hydraulic pressure in response to various conditions, thus performing smooth gear shifting.

DTC No.	DTC Detecting Condition	Trouble Area
P1730	The ECM detects conditions (a), (b), (c) and (d) continuity for 5 secs or more. (1-trip detection logic) (a) IG SW: ON (b) Park/neutral position switch: Except P, N position (c) T/M input shaft rpm: 300 rpm or less (d) T/M output shaft rpm: 1,000 rpm or more	• Open or short in NC revolution sensor circuit • NC revolution speed sensor • ECM

WIRING DIAGRAM

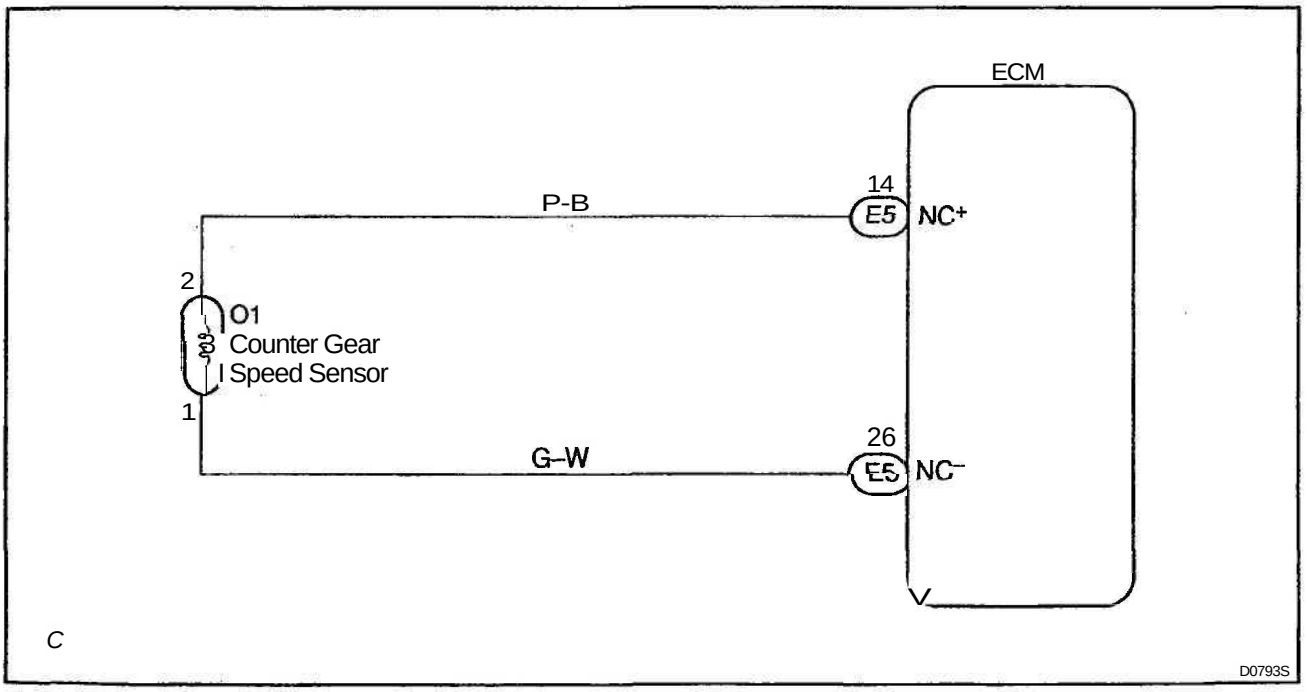

INSPECTION PROCEDURE

1	Check resistance between terminals NC+ and NC− of ECM.

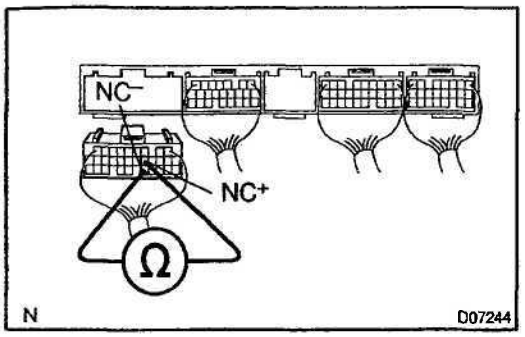

PREPARATION:
Disconnect the connector from ECM.
CHECK:
Check resistance between terminals NC+ and NC− of ECM.
OK:
Resistance: 620 ± 60 Ω

OK	Check and replace the ECM (See page IN–30).

NG

2	Check NC revolution speed sensor.

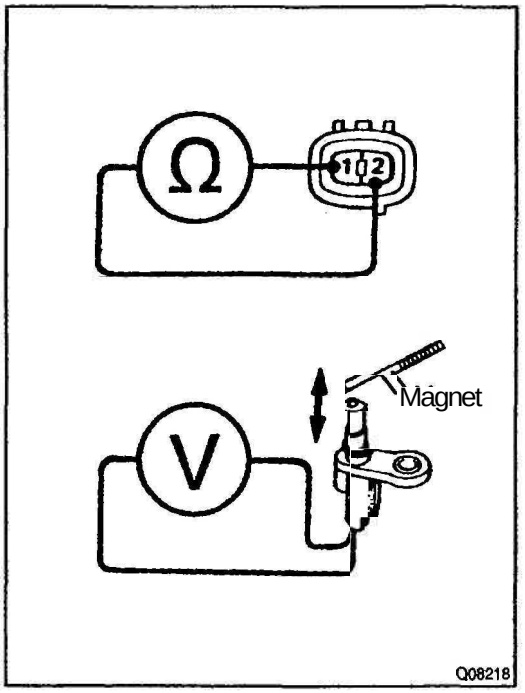

PREPARATION:
Remove the NC revolution speed sensor from transaxle.
CHECK:
(a) Measure resistance between terminals 1 and 2 of speed sensor.
(b) Check voltage between terminals 1 and 2 of the speed sensor when a magnet is put close to the front end of the speed sensor then taken away quickly.
OK:
(a) Resistance: 620 ± 60 Ω at 20 °C (68 °F)
(b) Voltage is generated intermittently.
HINT:
The voltage generated is extremely low.

NG	Replace the NC revolution speed sensor.

OK

Check and repair the harness and connector between ECM and NC revolution speed sensor (See page IN–30).

DTC	P1760	Linear Solenoid for Line Pressure Control Circuit Malfunction (Solenoid Valve SLT)

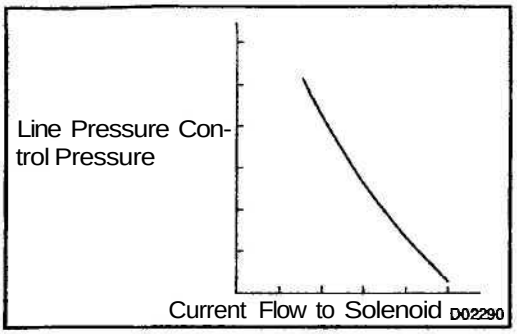

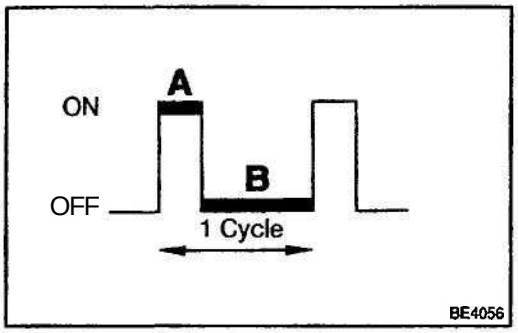

CIRCUIT DESCRIPTION

The throttle pressure that is applied to the primary regulator valve (which modulates line pressure) causes the solenoid valve SLT, under electronic control, to precisely and minutely modulate and generate line pressure according to the accelerator pedal effort, or engine power output detected.
This reduces the function of line pressure and provides smooth shifting characteristics.
Upon receiving the throttle valve opening angle signal, ECM controls the line pressure by sending a predetermined (*) duty ratio to the solenoid valve, modulating the line pressure, generating throttle pressure.
(*) Duty Ratio
The duty ratio is the ratio of the period of continuity in one cycle. For example, if "A" is the period of continuity in one cycle, and "B" is the period of non–continuity, then

$$\text{Duty Ratio} = \frac{A}{A+B} \times 100\ (\%)$$

DTC No.	DTC Detecting Condition	Trouble Area
P1760	(a) or (b) condition below is detected 1 second or more. (a) SLT−terminal: 0V (b) SLT−terminal: 12V	• Open or short in shift solenoid valve SLT circuit • Shift solenoid valve SLT • ECM

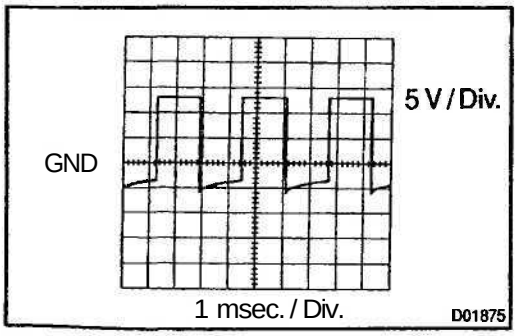

Reference:
Wave form between terminals SLT+ and SLT− during engine idling.

WIRING DIAGRAM

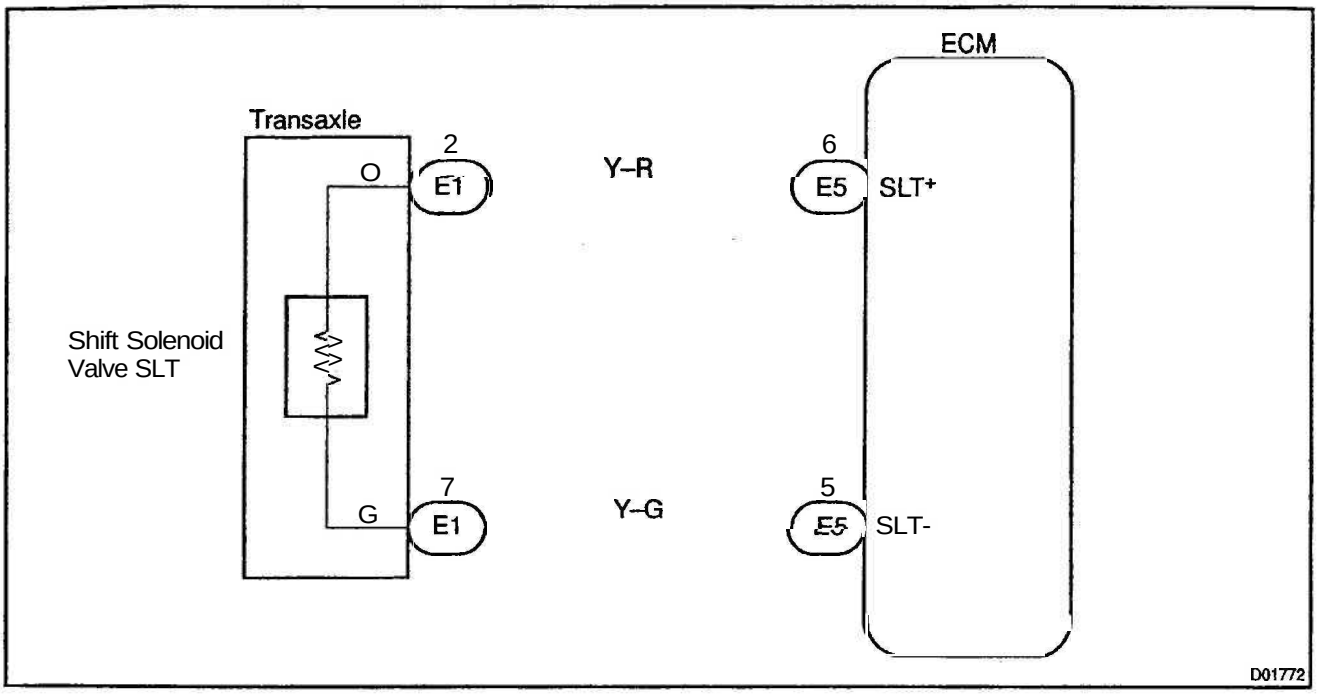

INSPECTION PROCEDURE

1	Check shift solenoid valve SLT.

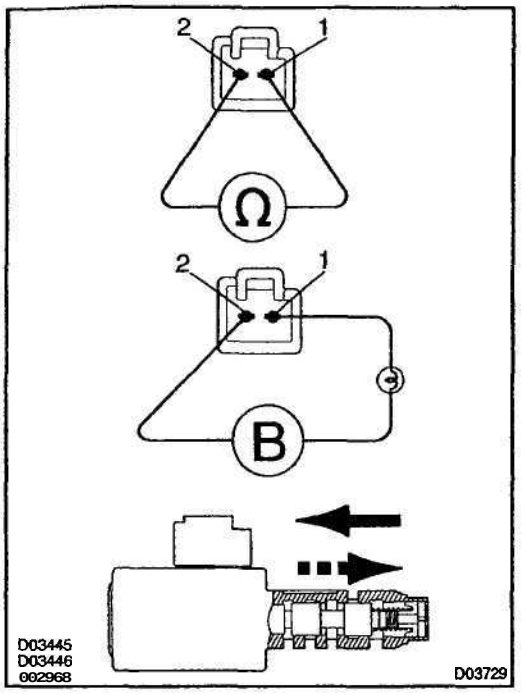

PREPARATION;

(a) Jack up the vehicle.
(b) Remove the oil pan.
(c) Disconnect the solenoid connector.

Check solenoid resistance:

CHECK:

Measure resistance between terminals 1 and 2 of solenoid connector.

OK:

Resistance: 5.0 - 5.6 Ω

Check solenoid operation:

CHECK:

Connect positive (+) lead with an 8 - 10W bulb to terminal 1 of solenoid connector and negative (–) lead to terminal 2, then check the movement of the valve.

OK:

When battery positive voltage is applied.	Valve moves in direction in illustration at right.
When battery positive voltage is cut off.	Valve moves in direction in illustration at left.

NG → Replace shift solenoid valve SLT.

OK ↓

2	**Check harness and connector between shift solenoid valve SLT and ECM (See page IN–30).**

NG → **Repair or replace harness or connector.**

OK ↓

Replace ECM.

D14ZS-03

DTC	P1780	Park/Neutral Position Switch Malfunction

CIRCUIT DESCRIPTION

The park/neutral position switch detects the shift lever position and sends signals to the ECM.
The ECM receives signals (R, R, N, D 2 and L) from the park/neutral position switch.

DTC No.	DTC Detection Condition	Trouble Area
P1780	When more than one of the following conditions continue for 500 sec. or more. (a) P, N position input signal is ON. (b) P position input signal is ON. (c) N position input signal is ON. (d) L position input signal is ON. (e) 2 position input signal is ON. (f) 3 position input signal is ON. (g) 4 position input signal is ON. (h) D position input signal is ON. (i) R position input signal is ON.	• Short in park/neutral position switch circuit • Park/neutral position switch • ECM
	When any of following conditions for 500 msec. or more in the M position. (a) P. N position input signal is ON. (b) P position input signal is ON. (c) N position input signal is ON. (d) L position input signal is ON.	

WIRING DIAGRAM

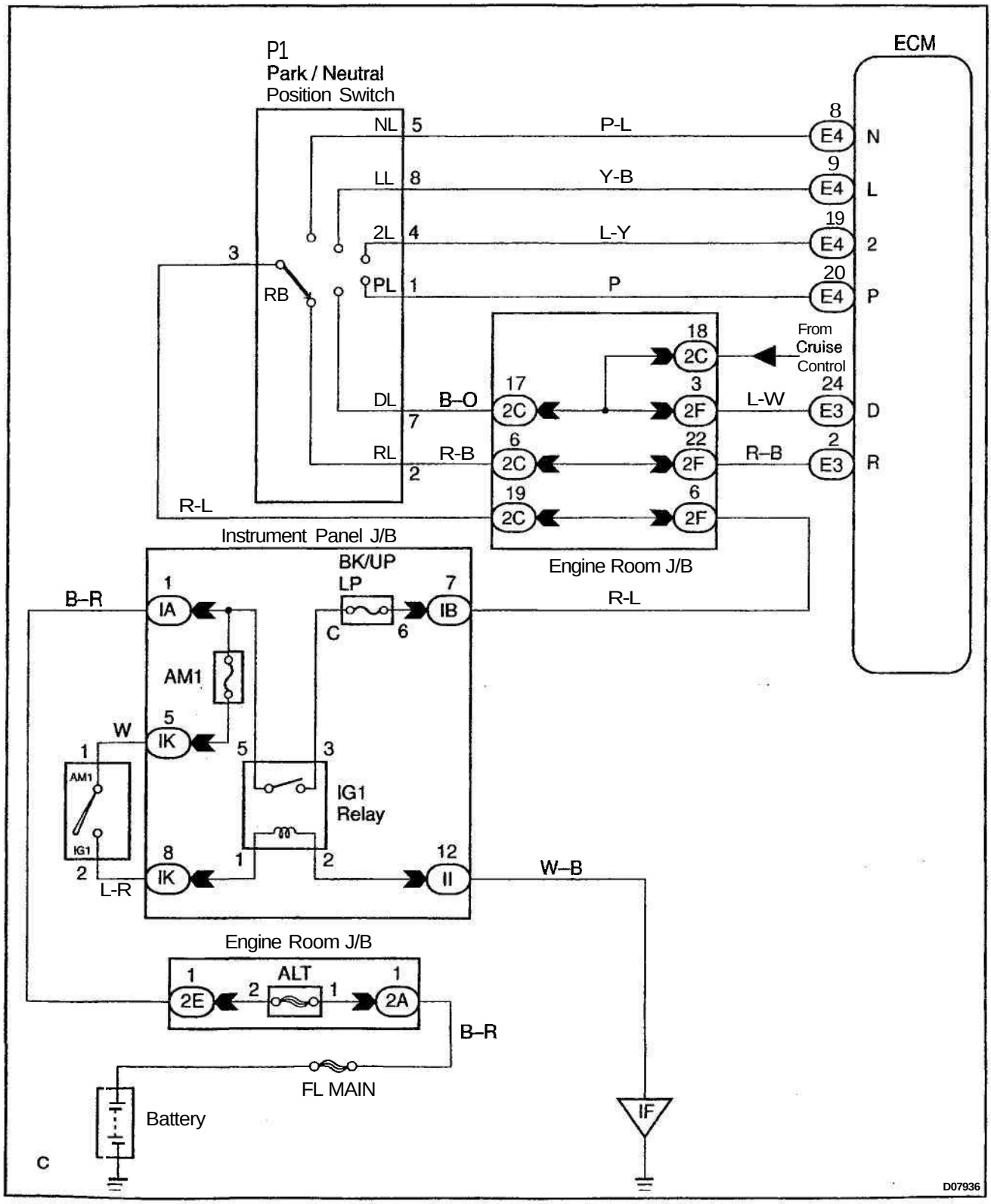

INSPECTION PROCEDURE

1	**Read PNP, REVERSE, 2ND and LOW signals.**

When using TOYOTA hand–held tester:

PREPARATION:

(a) Remove the DLC3 cover.
(b) Connect a TOYOTA hand–held tester to the DLC3.
(c) Turn the ignition switch ON and TOYOTA hand–held tester main switch ON.

CHECK:

Shift lever into the P, R, N, D, 2 and L positions, and read the NSW, REVERSE, 2ND DRIVE and LOW signals on the TOYOTA hand-held tester.

OK:

Shift position	Signal
2	2ND OFF→ON
L	LOW OFF → ON
D	DRIVE OFF → ON
R	REVERSE OFF → ON
P, N	NSW OFF → ON

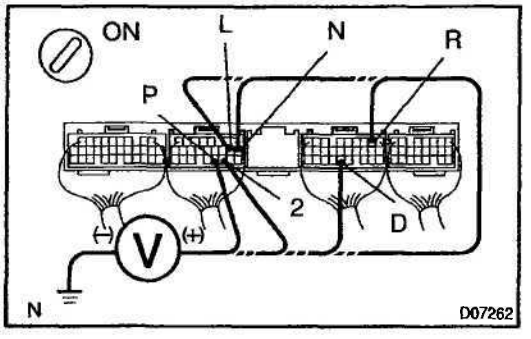

When not using TOYOTA hand–held tester:

PREPARATION:

Turn the ignition switch ON.

CHECK:

Measure voltage between terminals P. R. N. D. 2 and L of ECM and body ground when the shift lever is shifted to the following positions.

OK:

Position	P–Body ground	R-Body ground	N–Body ground	D–Body ground	2–Body ground	L-Body ground
P	9-14V	0V	0V	0V	0V	0V
R	0V	9-14V	0V	0V	0V	0V
N	0V	0V	9-14V	0V	0V	0V
D	0V	0V	0V	9-14V	0V	0V
2	0V	0V	0V	0V	9-14V	0V
L	0V	0V	0V	0V	0V	9-14V

HINT:

*: The voltage will drop slightly due to lighting up of the back up light.

OK	**Check and replace the ECM (See page IN–30).**

NG

2	Check park/neutral position switch.

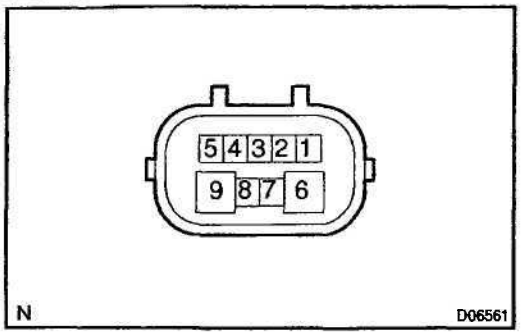

PREPARATION:

(a) Jack up the vehicle.

(b) Remove the park/neutral position switch.

CHECK:

Check continuity between each terminal shown below when the shift lever is moved to each position.

Shift position	Terminal No. to continuity	
P	6-9	1-3
R	2-3	-
N	6-9	3-5
D	3-7	-
2	3-4	-
L	3-8	-

OK:

There is continuity.

NG	Replace the park/neutral position switch.

OK

Repair or replace harness and connector between battery and park/neutral position switch, park/neutral position switch and ECM (See page IN–30).

O/D Main Switch & O/D OFF Indicator Light Circuit

CIRCUIT DESCRIPTION

The O/D main switch is a momentary type switch. When pressing the O/D main switch, the O/D OFF indicator light lights up and ECM prohibits shifting to O/D, and when pressing it again, the O/D OFF indicator light goes off and ECM allows shifting to O/D. Turning the IG switch OFF will reset the O/D OFF indicator light.

WIRING DIAGRAM

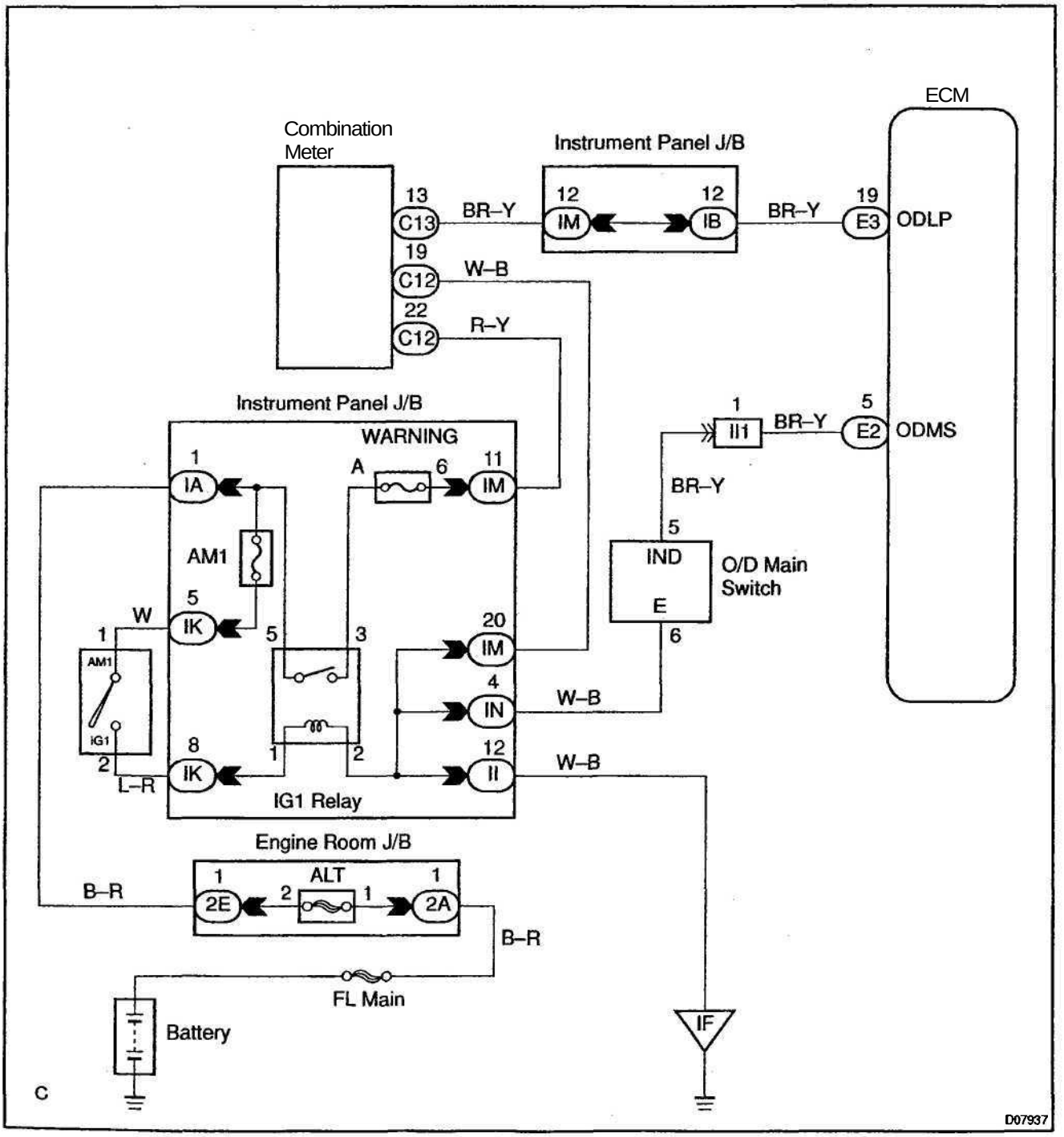

INSPECTION PROCEDURE

1	**Check operation of O/D main switch**

PREPARATION:
Turn the ignition switch ON.
CHECK:
(a) Check O/D OFF indicator light when O/D main switch is pushed in to ON.
(b) Check O/D OFF indicator light when O/D main switch is pushed again.
OK:
(a) O/D OFF indicator light lights up.
(b) O/D OFF indicator light goes off.

OK → **Proceed to next inspection shown on problem symptoms tables (See page DI–172).**

NG

2	Check and replace the **combination** meter (See page BE-2).

NG → Replace the combination meter.

OK

3	**Check O/D main switch.**

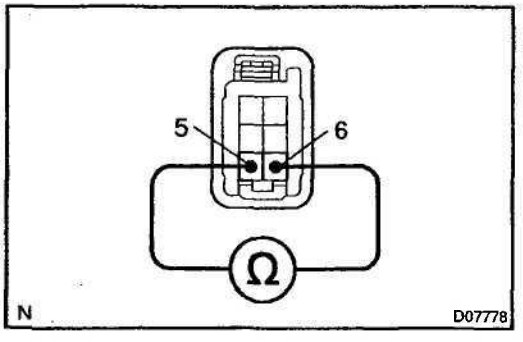

PREPARATION:
Disconnect the O/D main switch connector.
CHECK:
Check continuity between terminals 5 and 6 of O/D main switch connector.
OK:

O/D main switch condition	Specified condition
Press continuously O/D main switch	Continuity
Release O/D main switch	No continuity

NG → **Replace and repair O/D main switch.**

OK

4	Check voltage between terminal ODMS of ECM and body ground.

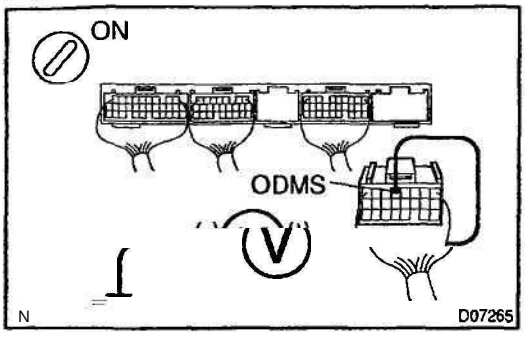

PREPARATION:
Turn the ignition switch ON.
CHECK:
Check voltage between terminal ODMS of ECM and body ground when O/D main switch is ON and OFF.
OK:

O/D main switch	Specified voltage
Press continuously O/D main switch	Below 1.0 V
Release O/D main switch	10-14V

OK → Check and replace the ECM (See page IN–20).

NG

5	**Check voltage between terminal ODLP of ECM and body ground.**

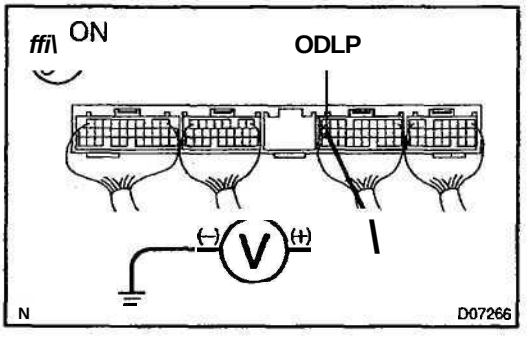

PREPARATION:
(a) Disconnect the connector of ECM.
(b) Turn the ignition switch ON.
CHECK:
Check voltage between terminal ODLP of ECM and body ground.
OK:
Voltage: 7.5 – 14 V

OK → Check and replace the ECM (See page IN–20).

NG

Check and replace harness and connector between combination meter and ECM, O/D main switch and ECM, O/D main switch and body ground (See page IN–20).

DI4ZR-03

O/D Cancel Signal Circuit

CIRCUIT DESCRIPTION

While driving uphill with cruise control activated, in order to minimize gear shifting and provide smooth cruising overdrive may be prohibited temporarily under some condition.

The cruise control ECU sends O/D cut signals to the ECM as necessary and the ECM cancels overdrive shifting until these signals are discontinued.

WIRING DIAGRAM

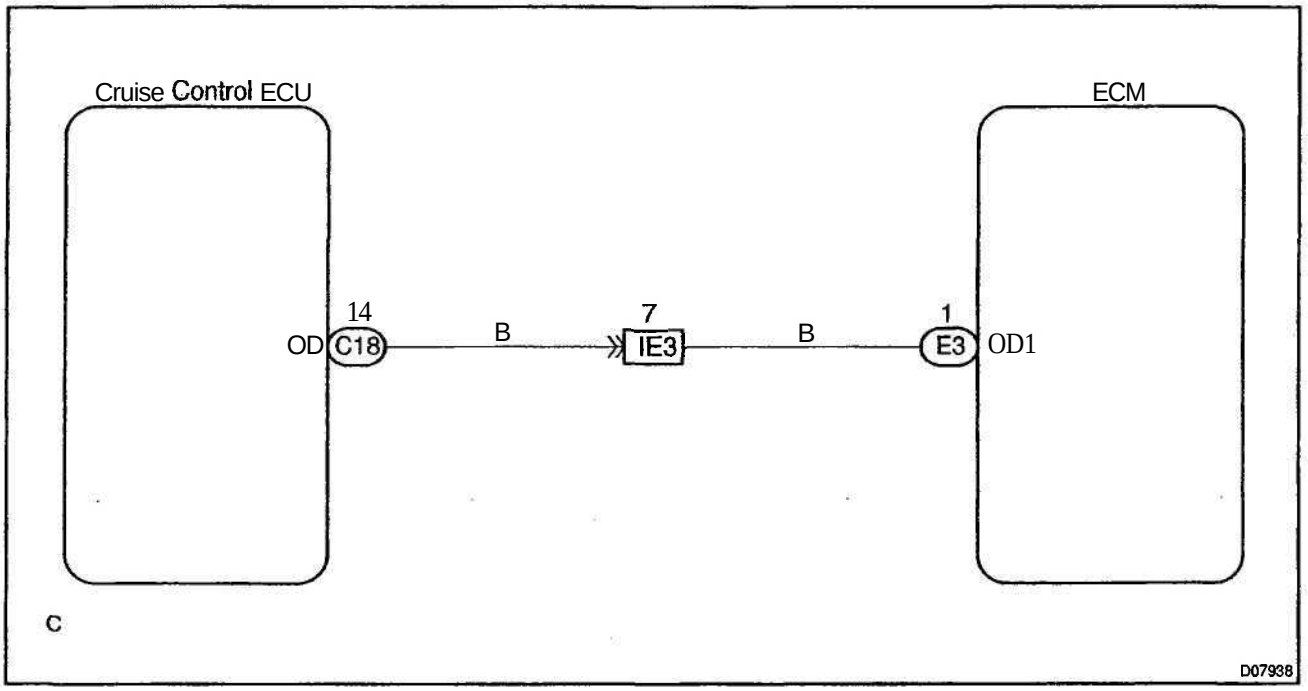

INSPECTION PROCEDURE

1	**Check voltage between terminal O01 of ECM and body ground.**

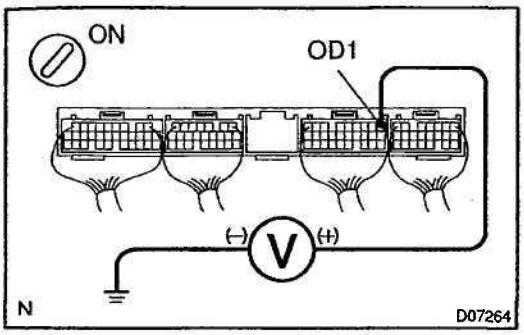

PREPARATION:
Turn the ignition switch ON.
CHECK:
Measure voltage between terminal OD1 of ECM and body ground.
OK:
Voltage: 10 – 14 V

OK	**Proceed to next circuit inspection shown on matrix chart (See page DM72).**

NG

2	**Check voltage between terminal OD of cruise control ECU harness side connector and body ground.**

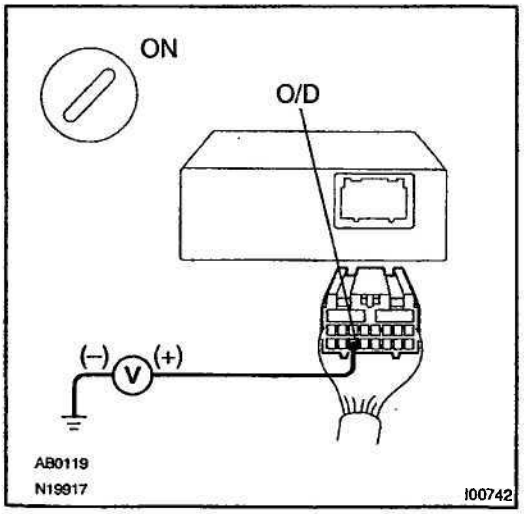

PREPARATION:
(a) Disconnect the cruise control ECU connector.
(b) Turn the ignition switch ON.
CHECK:
Measure voltage between terminal OD of cruise control ECU harness side connector and body ground.
OK:
Voltage: 10 – 14 V

OK	**Check and replace the cruise control ECU.**

NG

3	Check harness and connector between cruise control ECU and ECM (See page IN-30).

NG → Repair or replace the harness or connector.

OK →

Check and replace the ECM (See page IN-30).

DI25Z-03

Transmission Shift Switch Circuit

CIRCUIT DESCRIPTION

When shifting the shift lever in M position, using the transmission shift switch, it is possible to shift in 2 - 4 positions.
Pressing "Up switch" once shifts up 1 position, "Down switch" once shifts down 1 position respectively.

WIRING DIAGRAM

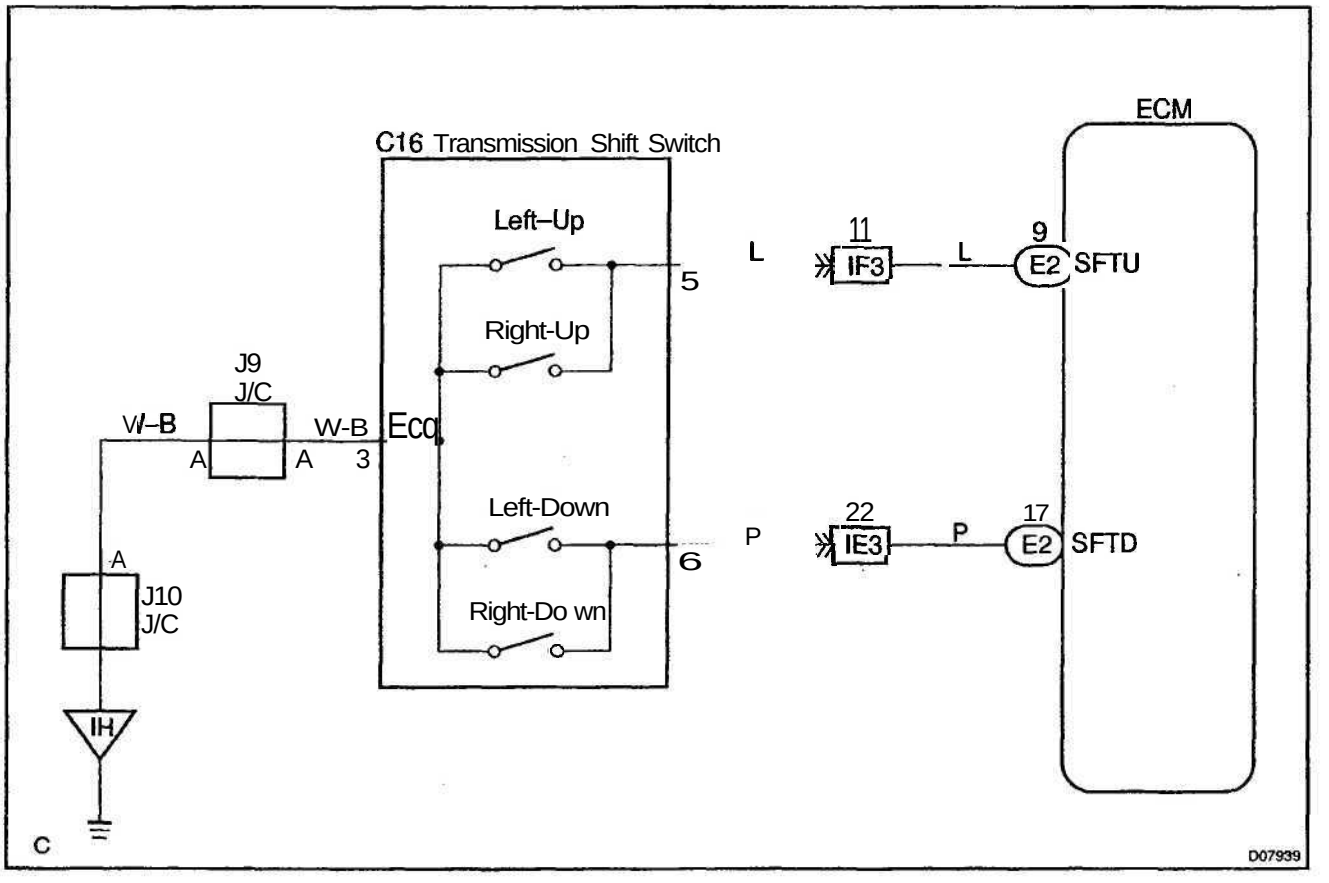

INSPECTION PROCEDURE

1	Check the shift lock control unit assembly (See page AX–16).

NG → Replace the shift lock control unit assembly.

OK

2	Check operation of transmission shift switch.

PREPARATION:

(a) Turn the ignition switch ON.

(b) Shift the shift lever into the M position.

CHECK:

Check the odo trip display panel when the transmission shift switch is pressed.

OK:

Switch condition	Odo trip display panel
"Up" switch press	Shift up
"Down" switch press	Shift down

NG → Go to step 5 .

OK

3	Check voltage between each of terminals SFTU and SFTD of ECM and body ground.

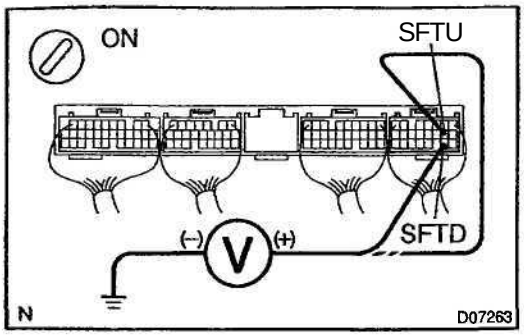

PREPARATION:

(a) Turn ignition switch ON.

(b) Remove the ECM with connectors still connected.

CHECK:

Check voltage between each terminals of SFTU and SFTD of ECM and body ground.

OK:

Switch condition	Tester connection	Specified condition
"Up" switch held pressing	SFTU — Body ground	10-14V
"Up" switch released		Below 1.5 V
"Down" switch held pressing	SFTD - Body ground	10-14V
"Down" switch released		Below 1.5 V

OK → Proceed to next circuit inspection shown in problem symptoms table (See page DM72).

NG

4	Check harness and connector between battery and ECM, ECM and odo trip display panel (See page IN-30).

NG → Repair or replace harness or connector.

OK

Check and replace ECM (See page IN-30).

5	Check transmission shift switch.

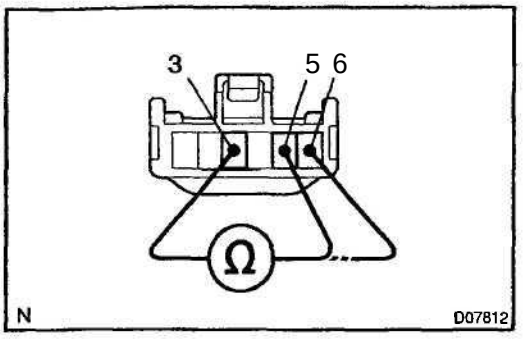

PREPARATION:

(a) Remove the steering wheel pad.

(b) Disconnect the transmission shift switch connector.

CHECK:

Check continuity between each terminal of transmission shift switch connector.

OK:

Switch condition	Tester connection	Specified value
"Up" switch pressed	3-5	No continuity
"Up" switch released		Continuity
"Down" switch pressed	3–6	No continuity
"Down" switch released		Continuity

NG → **Replace the steering wheel.**

OK →

Check and replace combination meter (See combination meter troubleshooting section on page BE–2).

DI6MF-01

E–Shift Main Switch Circuit

CIRCUIT DESCRIPTION

When the shift lever is shifted from the D to M position (the E–shift main switch is pressed), "M" on the combination meter lights up. When the "M" on the combination meter turns off. When the "M" on the combination meter is flashing, the system may be defective or the ATF temperature may be excessively high or low.

WIRING DIAGRAM

See page DI–594.

INSPECTION PROCEDURE

"M" position indicator light flashes.

When the ATF temperature is too high or low, the M position indicator light flashes. If this happens, shift the shift lever to the D position and shift it back to the M position after the ATF temperature increase or decrease. If the M position indicator light is still flashing, check if DTC P0710 is displayed or not and inspect the transmission shift main switch circuit.

"M" position indicator light does not light up.

1	**Check operation of M indicator light.**

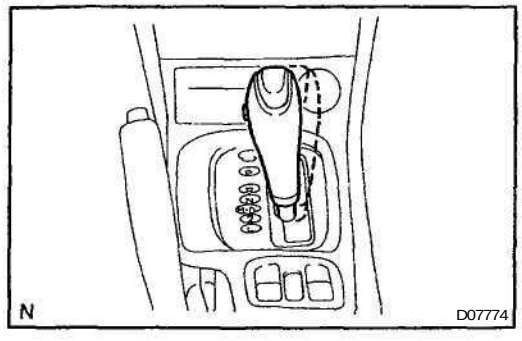

CHECK:

Check if the M indicator light normally when the shift lever is set to D position and M position.

OK:

Shift Lever Position	Specified Condition
M	"M" indicator light comes on
Except M	"M" indicator light goes off

NG → **Check and repair the M indicator light (See page BE–2).**

OK

2	**Check E–shift main switch.**

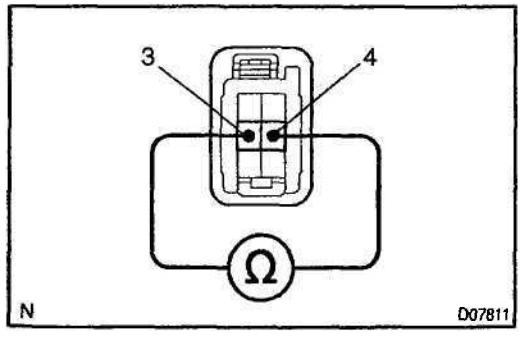

CHECK:

Check continuity between each terminal of the E-shift shift main switch.

OK:

Shift Lever Position	Tester connection	Specified value
M	3 - 4	Continuity
Except M	3 - 4	No continuity

If the continuity is not as specified, replace the switch.

AUTOMATIC TRANSAXLE (U341E)

HOW TO PROCEED WITH TROUBLESHOOTING

DI4YY-03

Items inside [ ] are titles of pages in this manual, with the page number indicated in the bottom portion. See the indicated pages for detailed explanations.

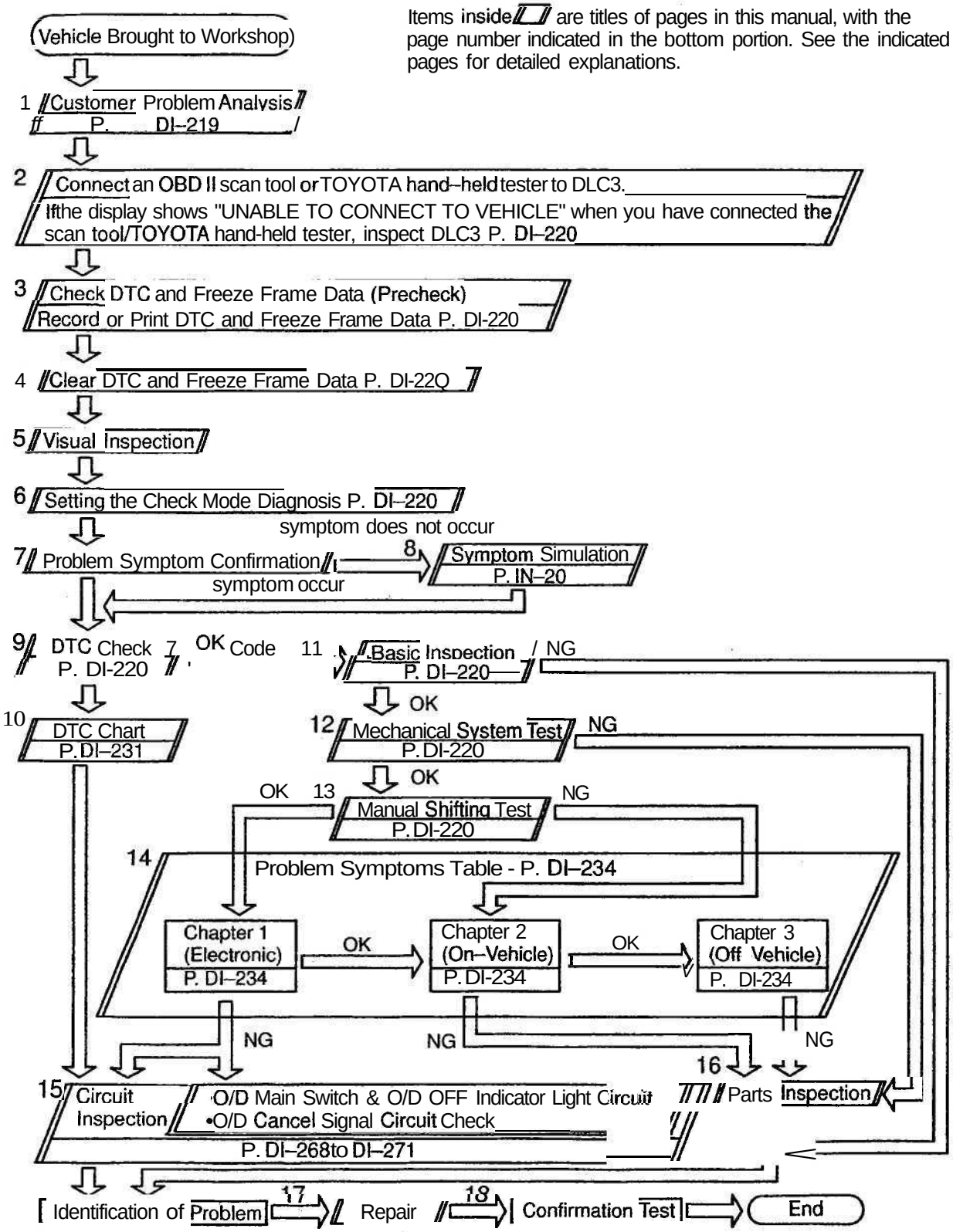

DI4YZ-01

CUSTOMER PROBLEM ANALYSIS CHECK

Automatic Transaxle System Check Sheet	Inspector's Name :

Customer's Name		Registration No.	
		Registration Year	/ /
		Frame No.	
Date Vehicle Brought In	/ /	Odometer Reading	km mile

Date Problem Occurred	/ /
How Often Does Problem Occur?	G Continuous G Intermittent (times a day)

Symptoms	G Vehicle does not move (G Any position G Particular position)
	☐ No up–shift (G 1 st → 2nd G 2nd → 3rd G 3rd → O/D)
	G No down–shift (☐ O/D → 3rd ☐ 3rd → 2nd ☐ 2nd → 1st)
	G Lock–up malfunction
	G Shift point too high or too low
	G Harsh engagement (G N → D G Lock–up G Any drive position)
	G Slip or shudder
	G No kick–down
	☐ Others ( )

Check Item	Malfunction Indicator Lamp	G Normal Q Remains ON

DTC Check	1st Time	G Normal code Q Malfunction code (DTC)
	2nd Time	G Normal code G Malfunction code (DTC)

DI502-03

PRE–CHECK

1. DIAGNOSIS SYSTEM

(a) Description

- When troubleshooting OBD II vehicles, the only difference from the usual troubleshooting procedure is that you connect to the vehicle an OBD II scan tool complying with SAE J1987 or TOYOTA hand–held tester, and read off various data output from the vehicle's ECM.

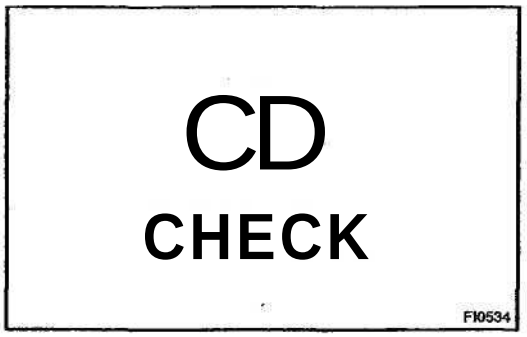

- OBD II regulations require that the vehicle's on-board computer lights up the Malfunction Indicator Lamp (MIL) on the instrument panel when the computer detects a malfunction in the computer itself or in drive system components which affect vehicle emissions. In addition to the MIL lighting up when a malfunction is detected, the applicable DTCs prescribed by SAE J2012 are recorded in the ECM memory (See page DI–14).

If the malfunction only occurs in 3 trips, the MIL goes off but the DTCs remain recorded in the ECM memory.

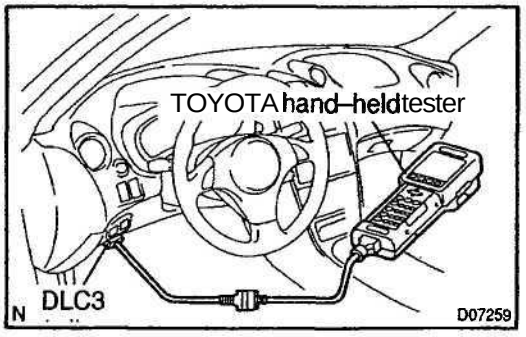

- To check the DTCs, connect an OBD II scan tool or TOYOTA hand–held tester to DLC3 on the vehicle. The OBD II scan tool or TOYOTA hand–held tester also enables you to erase the DTCs and check freeze frame data and various forms of engine data (For instruction book).
- DTCs include SAE controlled codes and Manufacturer controlled codes.
  SAE controlled codes must be set as prescribed by the SAE, while Manufacturer controlled codes can be set freely by the manufacturer within the prescribed limits (See DTC chart on page DI–231).

- The diagnosis system operates in normal mode during normal vehicle use, and also has a check mode for technicians to simulate malfunction symptoms and perform troubleshooting. Most DTCs use 2-trip detection logic (*) to prevent erroneous detection. By switching the ECM to check mode when troubleshooting, the technician can cause the MIL to light up and for a malfunction that is only detected once or momentarily.
  (TOYOTA hand–held tester) (See page DI–220)
- *2-trip detection logic:
  When a logic malfunction is first detected, the malfunction is temporarily stored in the ECM memory.

If the same malfunction is detected again during the 2nd test drive, this 2nd detection causes the MIL to light up .

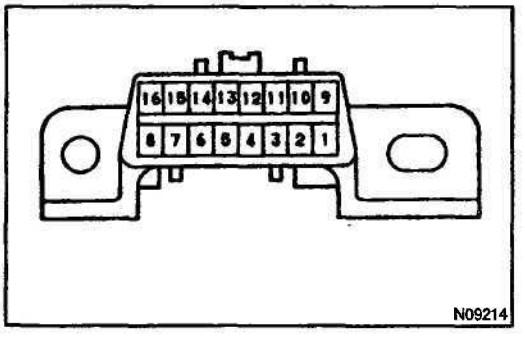

(b) Inspect the DLC3.
The vehicle's ECM uses ISO 9141-2 for communication. The terminal arrangement of DLC3 complies with SAE J1962 and matches the ISO 9141-2 format.

Tester connection	Condition	Specified condition
7 (Bus © Line) - 5 (Signal ground)	During communication	Pulse generation
4 (Chassis Ground) - Body	Always	1 a or less
5 (Signal Ground) - Body	Always	1 Ω *or* less
16 (B+) – Body	Always	9-14V

HINT:
If your display shows "UNABLE TO CONNECT TO VEHICLE" when you have connected the cable of OBD II scan tool or TOYOTA hand–held tester to DLC3, turned the ignition switch ON and operated the scan tool, there is a problem on the vehicle side or tool side.

- If communication is normal when the tool is connected to another vehicle, inspect DLC3 on the original vehicle.
- If communication is still not possible when the tool is connected connected to another vehicle, the problem is probably in the tool itself, so consult the Service Department listed in the tool's instruction manual.

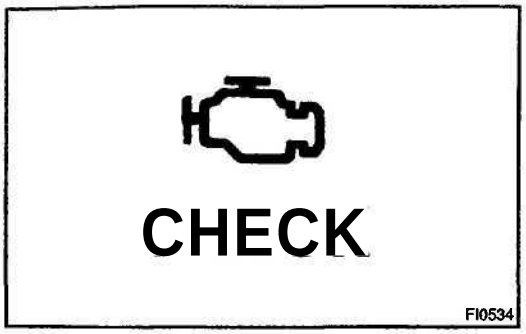

2. INSPECT DIAGNOSIS (NORMAL MODE)

(a) Check the MIL.

(1) The MIL comes on when the ignition switch is turned ON and the engine is not running.

HINT:

If the MIL does not light up, troubleshoot the combination meter (See page BE–2).

(2) When the engine is started, the MIL should go off. If the lamp remains on, the diagnosis system has detected a malfunction or abnormality in the system.

(b) Check the DTC.

NOTICE:

TOYOTA hand–held tester only: When the diagnostic system is switched from normal mode to check mode, it erases all DTCs and freeze frame data recorded in normal mode. So before switching modes, always check the DTCs and freeze frame data, and note them down.

(1) Prepare an OBD II scan tool (complying with SAE J1978) or TOYOTA hand–held tester.

(2) Connect the OBD II scan tool or TOYOTA hand–held tester to DLC3 at the lower of the instrument panel.

(3) Turn the ignition switch ON and turn the OBD II scan tool or TOYOTA hand–held tester switch ON.

(4) Use the OBD II scan tool or TOYOTA hand–held tester to check the DTCs and freeze frame data and note them down (For operating instructions, see the OBD II scan tool's instruction book).

(5) See page DI–231 to confirm the details of the DTCs.

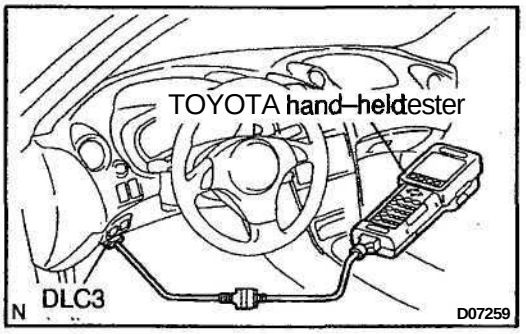

NOTICE:

When simulating symptoms with an OBD II scan tool (excluding TOYOTA hand–held tester) to check the DTCs, use normal mode. For codes on the DTCs chart subject to "2–trip detection logic", turn the ignition switch OFF after the symptoms have been simulated the 1st time. Then repeat the simulation process again. When the program has DTCs are recorded in the ECM.

3. INSPECT DIAGNOSIS (CHECK MODE)

HINT:

TOYOTA hand-held tester only: Compared to the normal mode, the check mode has high sensing ability to detect malfunctions. Furthermore, the same diagnostic items which are detected in Normal mode can also be detected in Check mode.

(a) Check the DTC.

(1) Check the initial conditions.
- Battery positive voltage 11 V or more.
- Throttle valve fully closed.
- Transaxle in P position.
- Air conditioning switched off.

(2) Turn the ignition switch OFF.

(3) Prepare a TOYOTA hand-held tester.

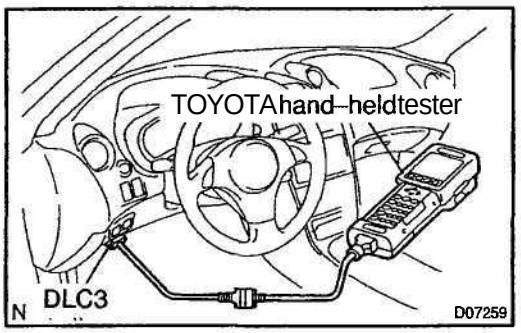

(4) Connect the TOYOTA hand-held tester to DLC3 at the lower of the instrument panel.

(5) Turn the ignition switch ON and switch the TOYOTA hand-held tester ON.

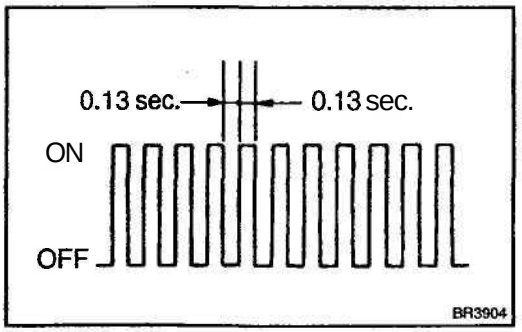

(6) Switch the TOYOTA hand-held tester from Normal mode to Check mode (Check that the MIL flashes).

(7) Start the engine (MIL goes out after the engine starts).

(8) Simulate the conditions of the malfunction described by the customer.

NOTICE:

Leave the ignition switch ON until you have checked the DTCs, etc.

(9) After simulating the malfunction conditions, use the TOYOTA hand-held tester diagnosis selector to check the DTCs and freeze frame data, etc.

HINT:

Take care not to turn the ignition switch OFF, as turning it off the diagnosis system from Check mode to Normal mode, so all DTCs, etc. are erased.

(10) After checking the DTC, inspect the applicable circuit.

(b) Clear the DTC.
The following operation will erase the DTC and freeze frame data. Operating an OBD II scan tool (complying with SAE J1978) or TOYOTA hand–held tester to erase the codes.
(See the OBD II scan tool's instruction book for operating instructions.)

NOTICE:
If the TOYOTA hand–held tester switches the ECM from Normal mode to Check mode or vice–versa, of if the ignition switch is turned from ON to ACC or OFF during chick mode, the DTCs and freeze frame data will be erased.

4. PROBLEM SYMPTOM CONFIRMATION

Taking into consideration the results of the customer problem analysis, try to reproduce the symptoms of the trouble. If the problem is that the transaxle does not up–shift, down–shift, or the shift point is too high or too low, conduct the following road test to confirm the automatic shift schedule and simulate the problem symptoms.

5. ROAD TEST

NOTICE:
Perform the test at normal operating ATF temperature 50 - 80 °C (122 – 176 °F).

(a) D position test
Shift into the D position and fully depress the accelerator pedal and check the following points.
(1) Check up–shift operation.
Check to see that 1 → 2, 2 → 3 and 3 → O/D up–shift takes place, and that the shift points conform to the automatic shift schedule (See page SS–43).

HINT:
- O/D Gear Up–shift Prohibition Control (1. Coolant temp. is 60 °C (140 °F) or less. 2. If there is a 10 km/h (6 mph) difference between the set cruise control speed and vehicle speed.)
- O/D Gear Lock–up Prohibition Control (1. Brake pedal is depressed. 2. Coolant temp. is 60 °C (140 °F) or less.)

(2) Check for shift shock and slip.
Check for shock and slip at the 1 → 2, 2 → 3 and 3 → O/D up–shifts.
(3) Check for abnormal noises and vibration.
Drive in the D position lock-up or O/D gear and check for abnormal noises and vibration.

HINT:
The check for the cause of abnormal noises and vibration must be done very thoroughly as it could also be due to loss of balance in the differential torque converter clutch, etc.

(4) Check kick–down operation.
While running in the D position, 2nd, 3rd and O/D gears, check to see that the possible kick–down vehicle speed limits for 2 → 1, 3 → 2 and O/D → 3 kick–downs conform to those indicated on the automatic shift schedule (See page SS–43).
(5) Check abnormal shock and slip at kick–down.
(6) Check the lock–up mechanism.
- Drive in D position, O/D gear, at a steady speed (lock–up ON) of about 60 km/h (37 mph).
- Lightly depress the accelerator pedal and check that the engine speed does not change abruptly.

If there is a big jump in engine speed, there is no lock–up.

(b) 2 position test

Shift into the 2 position and fully depress the accelerator pedal and check the following points.

(1) Check up–shift operation.

Check to see that the 1 → 2 up–shift takes place and that the shift point conforms to the automatic shift schedule (See page SS–43).

HINT:

There is no O/D up–shift and lock-up in the 2 position.

(2) Check engine braking.

While running in the 2 position and 2nd gear, release the accelerator pedal and check the engine braking effect.

(3) Check for abnormal noises during acceleration and deceleration, and for shock at up–shift and down–shift.

(c) L position test

Shift into the L position and fully depress the accelerator pedal and check the following points.

(1) Check no up–shift.

While running in the L position, check that there is no up–shift to 2nd gear.

(2) Check engine braking.

While running in the L position, release the accelerator pedal and check the engine braking effect.

(3) Check for abnormal noises during acceleration and deceleration.

(d) R position test

Shift into the R position and fully depress the accelerator pedal and check for slipping.

CAUTION:

Before conducting this test ensure that the test area is free from people and obstruction.

(e) P position test

Stop the vehicle on a grade (more than 5°) and after shifting into the P position, release the parking brake. Then, check to see that the parking lock pawl holds the vehicle in place.

6. BASIC INSPECTION

(a) Check the fluid level.

HINT:

- Drive the vehicle so that the engine and transaxle are at normal operating temperature.
  Fluid temp.: 70 – 80 °C (158 – 176 °F)
- Only use the COOL range on the dipstick as a rough reference when the fluid is replaced or the engine does not run.

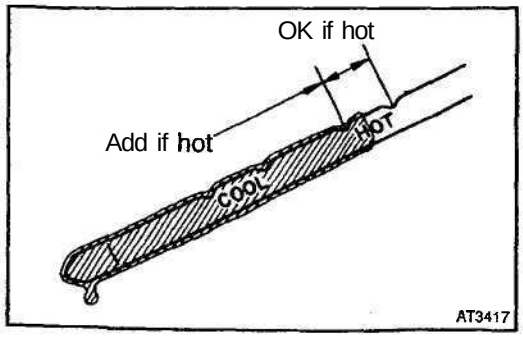

0) Park the vehicle on a level surface and set the parking brake.

(2) With the engine idling and the brake pedal depressed, shift the shift lever into all positions from P to L position and return to P position.

(3) Pull out the dipstick and wipe it clean.

(4) Push it back fully into the pipe.

(5) Pull it out and check that the fluid level is in the HOT range.

If the level is at the low side, add new fluid.

Capacity: 2.9 liters (3.1 US qts, 2.6 Imp. qts)

NOTICE:

Do not overfill.

(b) Check the fluid condition.

If the fluid smells burnt or is black, replace it.

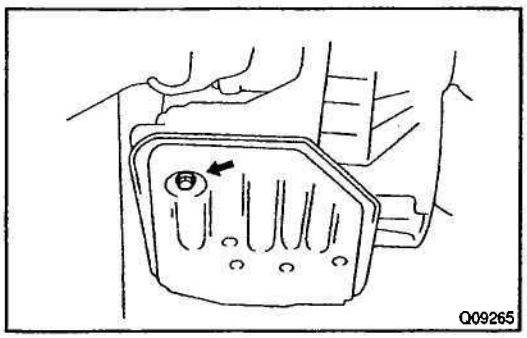

(c) Replace the ATF.

(1) Remove the drain plug and drain the fluid.

(2) Reinstall the drain plug securely.

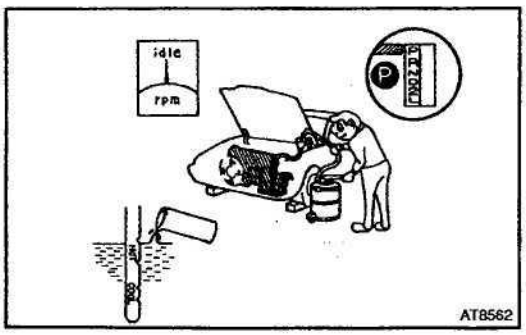

(3) With the engine OFF add new fluid through the oil filler pipe.

Fluid type: ATF Type T–IV

Capacity: 2.9 liters (3.1 US qts, 2.6 Imp. qts)

(4) Start the engine and shift the shift lever into all positions from P to L position and then shift into P position.

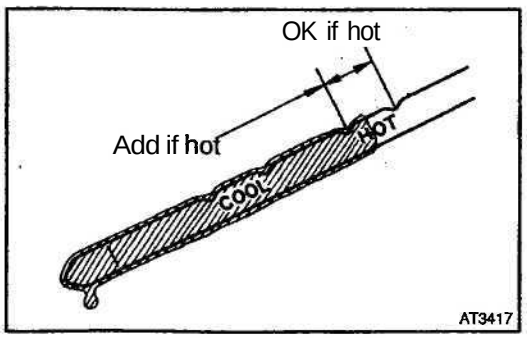

(5) With the engine idling, check the fluid level. Add fluid up to the COOL level on the dipstick.

(6) Check the fluid level at the normal operating temperature, 70 - 80 °C (158 - 176 °F), and add as necessary.

NOTICE:

Do not overfill.

(d) Check the fluid leaks.

Check for leaks in the transaxle.

If there are leaks, it is necessary to repair or replace O–rings, gaskets, oil seals, plugs or other parts.

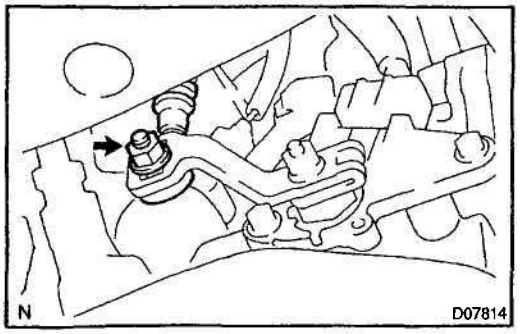

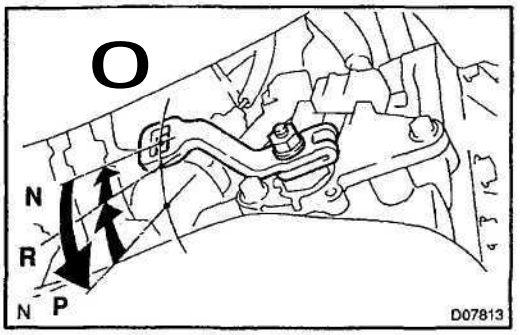

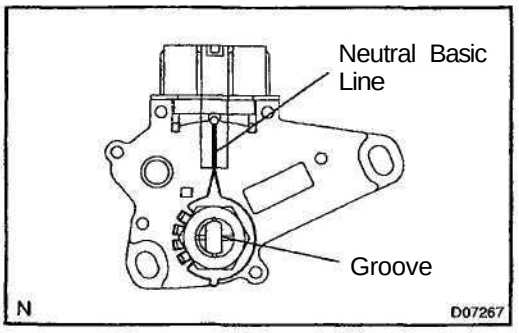

(e) Inspect and adjust the shift lever position.

When shifting the shift lever from the N position to other positions, check that the lever can be shifted smoothly and accurately to each position and that the position indicator is not aligned with the correct position.

If the indicator is not aligned with the correct position, carry out the following adjustment procedures.

(1) Loosen the nut on the shift lever.

(2) Push the control shaft fully downward.

(3) Return the control shaft lever 2 notches to N position.

(4) Set the shift lever to N position.

(5) While holding the shift lever lightly toward the R position side, tighten the shift lever nut.

Torque: 13 N·m (130 kgf·cm, 9 ft·lbf)

(6) Start the engine and make sure that the vehicle moves forward when shifting the lever from the N to D position and reverses when shifting it to the R position.

(f) Inspect and adjust the park/neutral position.

Check that the engine can be started with the shift lever only in the N or P position, but not in other positions.

If it is not as stated above, carry out the following adjustment procedures.

(1) Loosen the park/neutral position switch bolt and set the shift lever to the N position.

(2) Align the groove and neutral basic line.

(3) Hold in position and tighten the bolt.

Torque: 5.4 N·m (55 kgf·cm, 48 in·lbf)

For continuity inspection of the park/neutral position switch, see page DI–261.

(g) Check the idle speed.

Idle speed: 750 ± 50 rpm

(In N position and air conditioner OFF)

7. MECHANICAL SYSTEM TESTS

(a) Measure the stall speed.

The object of this test is to check the overall performance of the transaxle and engine by measuring the stall speeds in the D and R positions.

NOTICE:

- **Do the test at normal operating fluid temperature 50 - 80 °C (122 – 176 °F).**
- **Do not continuously run this test longer than 10 seconds.**
- **To ensure safety, conduct this test in a wide, clear level area which provides good traction.**
- **The stall test should always be carried out in pairs. One technician should observe the conditions of wheels or wheel stoppers outside the vehicle while the other is doing the test.**

(1) Chock the 4 wheels.

(2) Connect an OBD II scan tool or TOYOTA hand–held tester to DLC3.

(3) Fully apply the parking brake.

(4) Keep your left foot pressed firmly on the brake pedal.

(5) Start the engine.

(6) Shift into the D position. Press all the way down on the accelerator pedal with your right foot. Quickly read the stall speed at this time.

Stall speed: 2,350 - 2,800 rpm

(7) Do the same test in R position.

Stall speed: 2,350 - 2,800 rpm

Evaluation:

Problem	Possible cause
(a) Stall speed low in D and R positions	• Engine output may be insufficient • Stator one–way clutch is operating properly HINT: If more than 600 rpm below the specified value, the torque converter clutch could be faulty.
(b) Stall speed high in D position	• Line pressure too tow • Forward clutch slipping • No.2 one–way clutch not operating properly
(c) Stall speed high in R position	• Line pressure too low • Reverse clutch slipping • 1st & reverse brake slipping
(d) Stall speed high in D and R positions	• Line pressure too low • Improper fluid level

(b) Measure the time lag.

When the shift lever is shifted while the engine is idling, there will be a certain time lapse or lag before the shock can be felt. This is used for checking the condition of the No. 2 one–way clutch, reverse clutch, forward clutch, and 1 st & reverse brake.

NOTICE:

- **Do the test at normal operating fluid temperature 50 - 80 °C (122 – 176 °F).**
- **Be sure to allow 1 minute interval between tests.**
- **Take 3 measurements and take the average value.**

(1) Connect an OBD II scan tool or TOYOTA hand–held tester to DLC3.

(2) Fully apply the parking brake.

(3) Start the engine and check idle speed.

Idle speed: 750 ± 50 rpm (In N position and air conditioner OFF)

(4) Shift the shift lever from N to D position. Using a stop watch, measure the time from when the lever is shifted until the shock is felt.

Time lag: N → D Less than 1.2 seconds

(5) In the same manner, measure the time lag for N → R.

Time lag: N → R Less than 1.5 seconds

Evaluation (If N → D time or N → R time lag is longer than specified):

Problem	Possible cause
N → D time lag is longer	• Line pressure too tow • Forward clutch worn • No. 2 one–way clutch not operating
N → R time lag is longer	• Line pressure too tow • Reverse clutch worn • 1 st & reverse brake worn

8. HYDRAULIC TEST

Measure the line pressure.

NOTICE:

- **Do the test at normal operation fluid temperature 50 - 80 °C (122 – 176 °F)**
- **The line pressure test should always be carried out in pairs. One technician should observe the conditions of wheels or wheel stoppers outside the vehicle while the other is doing the test.**
- **Be careful to prevent SSTs hose from interfering with the exhaust pipe.**

(1) Warm up the ATF.

(2) Remove the test plug on the transaxle case front left side and connect SST.
(See page AX–30 for the location to connect SST)

SST 09992–00095 (09992–00231, 09992–00271)

(3) Fully apply the parking brake and chock the 4 wheels.

(4) Connect an OBD II scan tool or TOYOTA hand–held tester to DLC3.

(5) Start the engine and check idling speed.

(6) Keep your left foot pressed firmly on the brake pedal and shift into D position.

(7) Measure the line pressure when the engine is idling.

(8) Depress the accelerator pedal all the way down. Quickly read the highest line pressure when engine speed reaches stall speed.

(9) In the same manner, do the test in R position.

Specified line pressure:

Condition	D position kPa (kgf/cm², psi)	R position kPa (kgf/cm², psi)
Idling	372 - 412 (3.8 - 4.2, 54 - 60)	588 - 686 (6.0 - 7.0, 85 – 100)
Stall	1,157 – 1,265 (11.8 – 12.9, 168-183)	1,589– 1,765(16.2 – 18.0, 230 - 256)

If the measured pressure is not up to specified value, recheck the throttle cable adjustment and retest.

Evaluation:

Problem	Possible cause
If the measured values at all position are higher	• Shift solenoid valve SLT • Regulator valve defective
If the measured values at all position are lower	• Shift solenoid valve SLT • Regulator valve defective • Oil pump defective
If pressure is low in the 0 position only	• D position circuit fluid leakage • Forward clutch defective
If pressure is low in the R position only	• R position circuit fluid leakage • Reverse clutch defective • 1 st & reverse brake defective

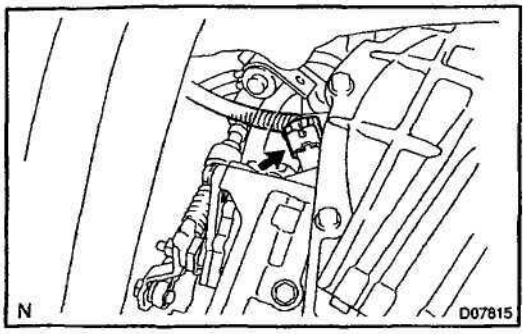

9. MANUAL SHIFTING TEST

HINT:

With this test, it can be determined whether the trouble is within the electrical circuit or is a mechanical problem in the transaxle.

(a) Disconnect the solenoid wire.

(b) Inspect the manual driving operation.

Check that the shift and gear positions correspond with the table below.

While driving, shift through the L, 2 and D positions. Check that the gear change corresponds to the shift position.

Shift Position	Gear Position
D	3rd
2	3rd
L	3rd
R	Reverse
P	Pawl Lock

HINT:

If the L, 2 and D position gear positions are difficult to positions are difficult to distinguish, do the following read test.

If any abnormality is found in the above test, the problem is in the transaxle itself.

(c) Connect the solenoid wire.

(d) Cancel out DTC (See page DI–220).

01420-03

DIAGNOSTIC TROUBLE CODE CHART

If a DTC is displayed during the DTC check, check the circuit listed for that code in the table below and proceed to the page given.

* : –...MIL does not light /●...MIL light up

DTC No. (See Page)	Detection Item	Trouble Area	MIL *	Memory
P0500 (DI-238)	Vehicle Speed Sensor Malfunction	• Open or short in vehicle speed sensor circuit • Vehicle speed sensor • Combination meter •ECM • Automatic transaxle assembly	–	O
P0710 (DI-242)	Transmission Fluid Temperature Sensor Malfunction (ATF Temperature Sensor)	• Open or short in ATF temperature sensor circuit • ATF temperature sensor •ECM	–	O
P0750 (DI-244)	Shift Solenoid A Malfunction (Shift Solenoid Valve No. 1)	• Shift solenoid valve No. 1 is stuck open or closed • Valve body is blocked up or stuck	–	O
P0753 (DI-246)	Shift Solenoid A Electrical Malfunction (Shift Solenoid Valve No. 1)	• Open or short in shift solenoid valve No. 1 circuit • Shift solenoid valve No. 1 •ECM	–	O
P0755 (DI-244)	Shift Solenoid B Malfunction (Shift Solenoid Valve No. 2)	• Shift solenoid valve No. 2 is stuck open or closed • Valve body is blocked up or stuck	–	O
P0758 (DI-246)	Shift Solenoid B Electrical Malfunction (Shift Solenoid Valve No. 2	• Open or short in shift solenoid valve No. 2 circuit • Shift solenoid valve No. 2 •ECM	–	O
P0770 (DI-250)	Shift Solenoid E Malfunction (Shift Solenoid Valve SL)	• Shift solenoid valve SL is stuck open or closed • Valve body is blocked up or stuck • Lock-up clutch	–	O
P0773 (DI-252)	Shift Solenoid E Electrical Malfunction (Shift Solenoid Valve SL)	• Open or short in shift solenoid valve SL circuit • Shift solenoid valve SL • ECM	–	O
P1520 (DI-255)	Stop Light Switch Circuit	• Open or short in stop light switch circuit • Stop light switch •ECM	–	O
P1725 (DI-256)	NT Revolution Sensor Circuit Malfunction (Input Turbine Speed Sensor)	• Open or short in input turbine speed sensor circuit • Input turbine speed sensor •ECM	–	O
P1760 (DI-258)	Linear Solenoid for Accumulator Pressure Control Circuit Malfunction (Shift Solenoid Valve SLT)	• Open or short in shift solenoid valve SLT circuit • Shift solenoid valve SLT •ECM	–	O
P1780 (DI-261)	Park/Neutral Position Switch Malfunction	• Short in park/neutral position switch circuit • Park/neutral position switch •ECM	–	O
P1790 (DI-265)	ST Solenoid Valve Circuit Malfunction	• Open or short in shift solenoid valve ST circuit • Shift solenoid valve ST •ECM	–	O

DIGN4–01

PARTS LOCATION

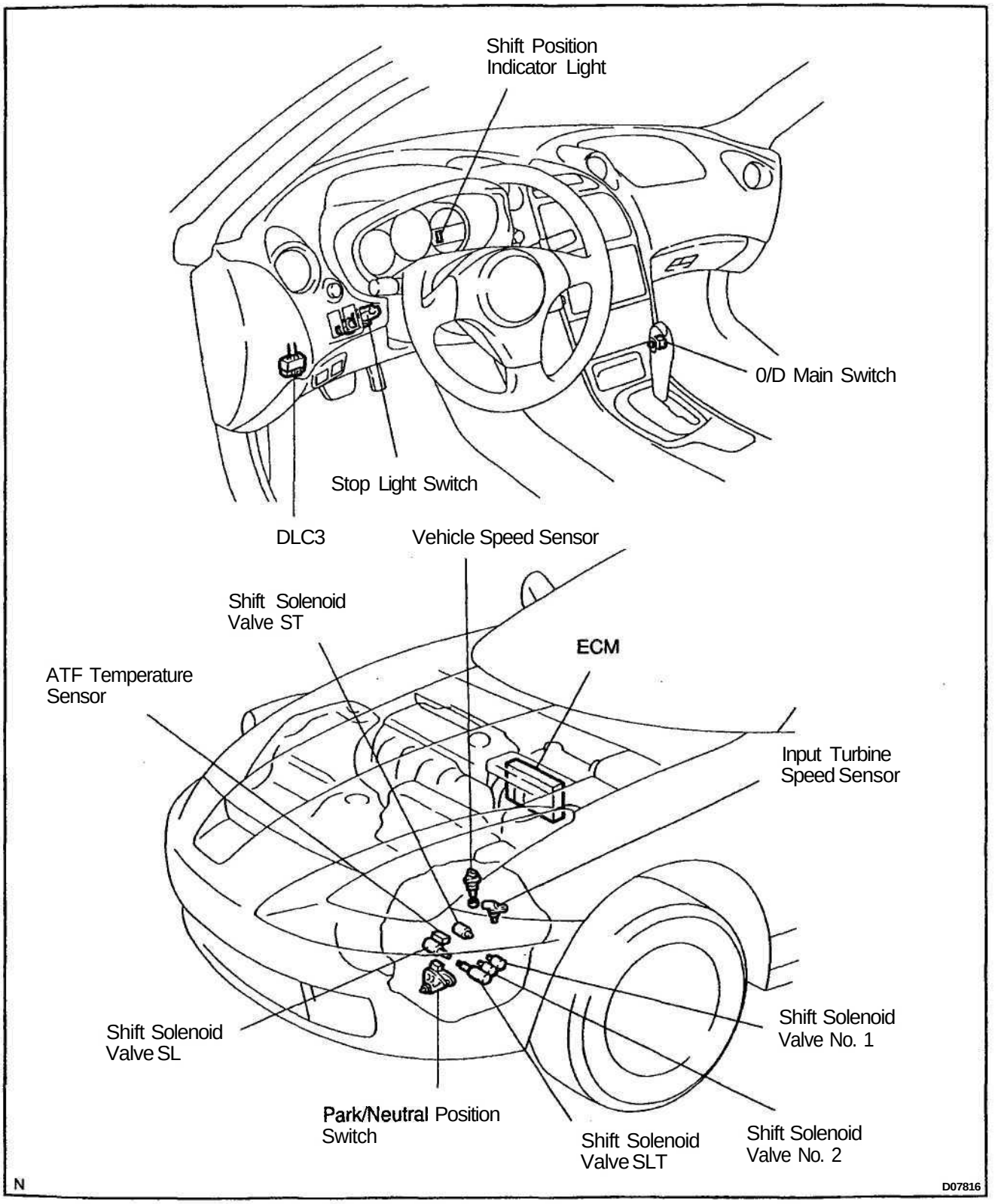

DIAZO-04

TERMINALS OF ECM

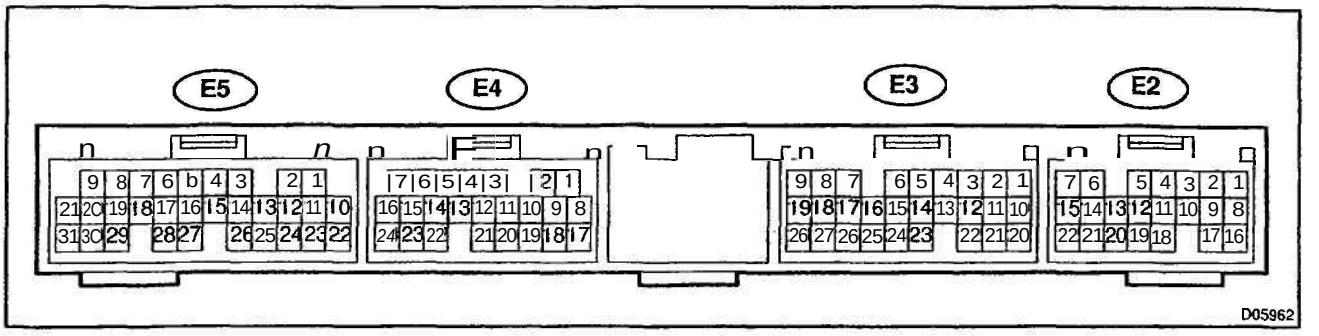

Symbols (Terminals No.)	Wiring Color	Condition	STD Voltage (V)
S1 (E5-8) ↔ E1 (E4-17)	BR-Y ↔ BR	IG ON	10-14
		1 st or 2nd gear	10-14
		3rd or O/D gear	Below 1
S2 (E5-20) ↔ E1 (E4-17)	Y ↔ BR	IG ON	Below 1
		1st or 2nd gear	10-14
		3rd or O/D gear	Below 1
SL (E5-19) ↔ E1 (E4 - 17)	P-L ↔ BR	IG ON	Below 1
		Vehicle driving under lock-up position	10 - 14
SLT+ (E5-6) ↔ SLT- (E5-5)	Y-R ↔ Y-G	IG ON	10-14
OD1 (E3-1) ↔ E1 (E4-17)	B ↔ BR	IGON	5-6
ODLP (E3-10) ↔ E1 (E4-17)	BR-Y ↔ BR	O/D main switch ON	10-14
		O/D main switch OFF	Below 1
L (E4-9) ↔ E1 (E4-17)	Y-B ↔ BR	IG ON and Shift lever L position	10-14
		IG ON and Shift lever other than L position	Below 1
2 (E4-19) ↔ E1 (E4-17)	L-Y ↔ BR	IG ON and Shift lever 2 position	10-14
		IG ON and Shift lever other than 2 position	Below 1
R (E3-2) ↔ E1 (E4-17)	B-O ↔ BR	IG ON and Shift lever R position	10-14
		IG ON and Shift lever other than R position	Below 1
D (E3-24) ↔ E1 (E4-17)	L-W ↔ BR	IG ON and Shift lever D position	10-14
		IG ON and Shift lever other than D position	Below 1
N (E4-8) ↔ E1 (E4-17)	P-L ↔ BR	IG ON and Shift lever N position	10-14
		IG ON and Shift lever other than N position	Below 1
THO (E4-13) ↔ E2 (E4-18)	GR-L ↔ BR	IG ON and ATF temperature 110 °C (230 °F)	Below 1
ST (E5-29) ↔ E1 (E4-17)	BR-W ↔ BR	IG ON	Below 1
		IG ON and R gear	10-14
P (E4-20) ↔ E1 (E4-17)	R ↔ BR	IG ON and Shift lever P position	10-14
		IG ON and Shift fever other than P position	Below 1
SPD (E3-22) ↔ E1 (E4-17)	W-R ↔ BR	IG ON and rotate driving wheel slowly	Pulse generation
ODMS (E5-5) ↔ E1 (E4-17)	BR-Y ↔ BR	IG ON	Below 1
		IG ON and Press continuously O/D main switch	10-14

DI67T-03

PROBLEM SYMPTOMS TABLE

If a normal code is displayed during the DTC check but the trouble still occurs, check the circuits for each symptom in the order given in the charts on the following pages and proceed to the page given for trouble-shooting.

The Matrix Chart is divided into 3 chapters.

Chapter 1: Electronic circuit matrix chart
Chapter 2: On–vehicle repair matrix chart
Chapter 3: Off-vehicle repair matrix chart

If the instruction "Proceed to next circuit inspection shown on matrix chart" is given in the flow chart for each circuit, proceed to the circuit with the next highest number in the table to continue the check.

If the trouble still occurs even though there are no abnormalities in any of the other circuits, then check and replace the ECM.

Chapter 1: Electronic Circuit Matrix Chart

Symptom	Suspect Area	See page
No up–shift (A particular gear, from 1st to 3rd gear, is not up–shifted)	ECM	–
No up–shift (3rd → O/D)	1. O/D main switch and O/D OFF indicator light circuit 2. O/D cancel signal circuit 3. ECM	DI–268 DI–271 –
No down–shift (A particular gear, from 1 st to 3rd gear, is not down–shifted)	ECM	–
No down–shift (O/D → 3rd)	1. O/D main switch and O/D OFF indicator light circuit 2. ECM	DI–268 –
No lock–up	ECM	–
No lock–up OFF	ECM	–
Shift point too high or too low	ECM	–
Up–shift to O/D from 3rd while O/D main switch is OFF	ECM	–
Up–shift to O/D from 3rd while engine is cold	ECM	–
No kick–down	ECM	–
Engine stalls when starting off or stopping	ECM	–

Chapter 2: On-vehicle Repair
(★: U341E AUTOMATIC TRANSAXLE Repair Manual Pub. No. RM735U)

Symptom	Suspect Area	See page
Vehicle does not move in any forward position and reverse position	1. Manual valve 2. Primary regulator valve 3. Secondary regulator valve 4. Off-vehicle repair matrix chart	★ ★ ★ –
Vehicle does not move in R position	1. Manual valve 2. Off-vehicle repair matrix chart	★ –
No up-shift (1st → 2nd)	1. 1–2 shift valve 2. Off-vehicle repair matrix chart	★ –
No up-shift (2nd → 3rd)	1. 2-3 shift valve 2. Off-vehicle repair matrix chart	★ –
No up-shift (3rd → O/D)	1. 3–4 shift valve 2. Off-vehicle repair matrix chart	★ –
No down-shift (O/D → 3rd)	3–4 shift valve	★
No down-shift (3rd → 2nd)	2-3 shift valve	★
No down-shift (2nd → 1st)	1-2 shift valve	★
No lock-up or No lock-up off	1. Lock-up relay valve 2. Lock-up control valve 3. Solenoid relay valve 4. Solenoid modulator valve 5. Off-vehicle repair matrix chart	★ ★ ★ –
Harsh engagement (N → D)	1. C_1 accumulator 2. Accumulator control valve 3. Off-vehicle repair matrix chart	★ ★ –
Harsh engagement (N → R)	1. C_3 accumulator 2. Accumulator control valve 3. Reverse control valve 4. Off-vehicle repair matrix chart	★ ★ ★ –
Harsh engagement (Lock-up)	1. Lock-up relay valve 2. Accumulator control valve 3. Lock-up control valve 4. Off-vehicle repair matrix chart	★ ★ ★ –
Harsh engagement (1st → 2nd)	1. B_2 accumulator 2. Accumulator control valve	★ ★
Harsh engagement (2nd → 3rd)	1. C_2 accumulator 2. Accumulator control valve	★ ★
Harsh engagement (3rd → O/D)	1. B_1 accumulator 2. Accumulator control valve 3. 3–4 shift timing valve	★ ★ ★
Harsh engagement (O/D → 3)	1. 3—4 shift timing valve 2. 4—3 shift timing valve	★ ★
Harsh engagement (D, 2, L position)	Coat relay valve	★
Slip or shudder (Forward and reverse)	1. Oil strainer 2. Off-vehicle repair matrix chart	AX-9 –
No engine braking (1st: L position)	1. Reverse control valve 2. Off-vehicle repair matrix chart	★ –
No engine braking (2nd: 2 position)	3–4 shift valve	★

No kick–down	1. 1–2 shift valve 2. 2–3 shift valve 3. 3–4 shift valve	* * *
Poor acceleration	SLT damper	*

Chapter 3: Off-vehicle Repair
(★: U341E AUTOMATIC TRANSAXLE Repair Manual Pub. No. RM735U)

Symptom	Suspect Area	See page
Vehicle does not move in any forward position and reverse position	1. Planetary gear unit 2. Forward clutch 3. One-way clutch No. 2 4. Reverse Clutch 5. 1st and reverse brake	★ ★ ★ ★
Vehicle does not move in R position	1. Planetary gear unit 2. Reverse Clutch 3. 1st and reverse brake	★ ★ ★
No up-shift (1st → 2nd)	1. 2nd brake 2. One-way clutch No. 1	★
No up-shift (2nd → 3rd)	Direct clutch	★
No up-shift (3rd → O/D)	O/D and 2nd brake	★
No lock-up or No lock-up off	Torque converter clutch	AX-36
Harsh engagement (N → D)	1. Forward clutch 2. One-way clutch No. 2	★
Harsh engagement (N → R)	1. Reverse clutch 2. 1st and reverse brake	★ ★
Harsh engagement (Lock-up)	Torque converter clutch	AX-36
Harsh engagement (1st → 2nd)	1. 2nd brake 2. One-way clutch No. 1	★
Harsh engagement (2nd → 3rd)	Direct clutch	★
Harsh engagement (3rd → O/D)	O/D and 2nd brake	★
Slip or shudder (Forward position)	1. Torque converter clutch 2. Forward clutch 3. Direct clutch 4. O/D and 2nd brake 5. 2nd brake 6. One-way clutch No. 1 7. One-way clutch No. 2	AX-36 ★ ★ ★ ★ ★ ★
Slip or shudder (Reverse position)	1. Reverse clutch 2. 1st and reverse brake	★ ★
Slip or shudder (1st)	One-way clutch No. 2	★
Slip or shudder (2nd)	1. 2nd brake 2. One-way clutch No. 1	★ ★
Slip or shudder (3rd)	Direct clutch	★
Slip or shudder (O/D)	O/D and 2nd brake	★
No engine braking (1st: L position)	1st and reverse brake	★
No engine braking (2nd: 2 position)	O/D and 2nd brake	★
Poor acceleration (All position)	Torque converter clutch	AX-36
Large shift shock or engine stalls when starting off or stopping	Torque converter clutch	AX-36

CIRCUIT INSPECTION

DTC	P0500	Vehicle Speed Sensor Malfunction

CIRCUIT DESCRIPTION

The vehicle speed sensor outputs a 4-pulse signal for every revolution of the transaxle output shaft. After this signal is converted into a more precise rectangular wave form by the wave form shaping circuit inside the combination meter, it is then transmitted to the ECM.

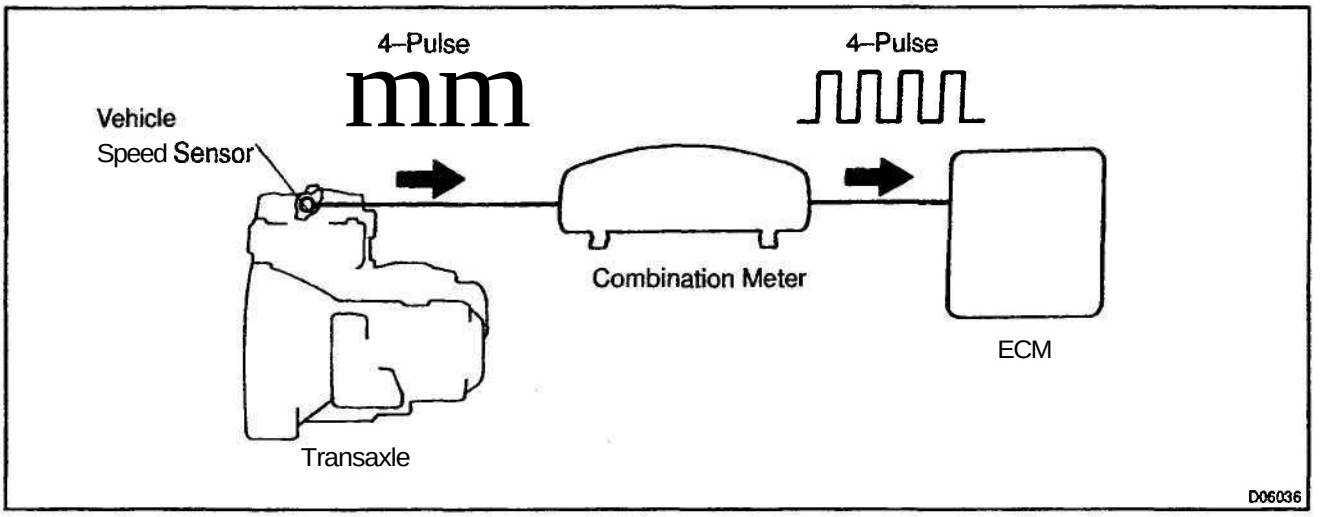

DTC No.	DTC Detecting Condition	Trouble Area
P0500	When all of the following conditions continues for 1 sec. or more: 1. After the ignition switch is turned on, 0.5 second or more elapses. 2. Counter gear rpm is equal to or greater then vehicle speed. 3. Vehicle speed sensor signal can not be input to the ECM. 4. The condition that engine coolant temp. is 20 °C or more (no error in engine coolant temp. sensor circuit is detected) and the park/neutral position switch is set to P or N continues for 2 for. or more, or the condition that engine coolant temp. is less than 20 °C (an error in engine coolant temp. sensor circuit is detected) and the park/neutral position switch is set to P or N continues for 30 sec. or more.	• Combination meter • Open or short in vehicle speed sensor circuit • Vehicle speed sensor • ECM • Automatic transaxle (clutch, brake or gear etc,)
	Clutch or brake slips or gear is broken	

WIRING DIAGRAM

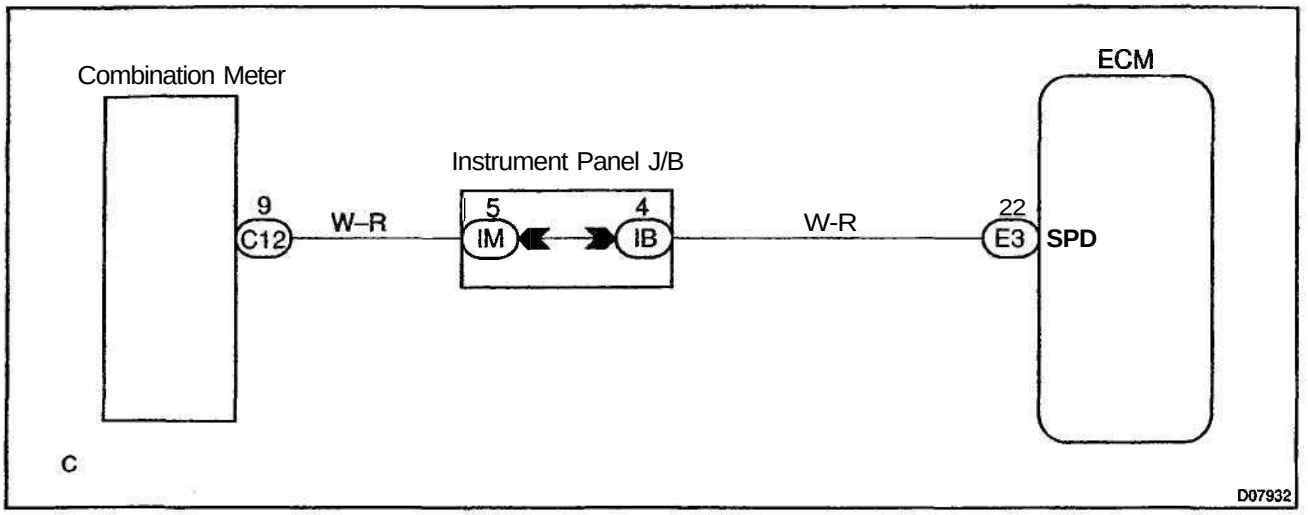

INSPECTION PROCEDURE

1	**Check operation of speedometer.**

HINT:
Read freeze frame data using TOYOTA hand–held tester or OBD II scan tool. Because freeze frame records the engine conditions when the malfunction is detected. When troubleshooting it is useful for determining whether the vehicle was running or stopped, the engine was warmed up or not, the air-fuel ratio was lean or rich, etc. at the time of the malfunction.

CHECK:

Drive the vehicle and check if the operation of the speedometer in the combination meter is normal.
HINT:
The vehicle speed sensor is operating normally if the speedometer display is normal.

NG → **Check speedometer (See page BE-2).**

OK

2	Check for short in harness and connector between terminal SPD of ECM connector and body ground.

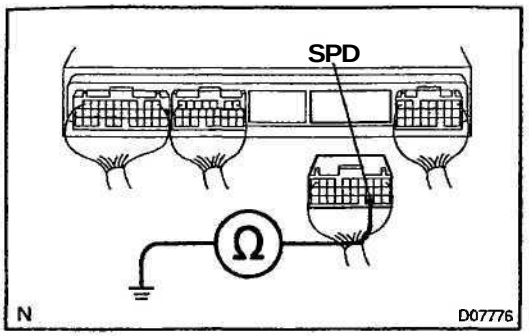

PREPARATION:
Disconnect the connector of the ECM.
CHECK:
Check continuity between terminal SPD of the ECM connector and body ground.
OK:
No continuity (1M fl or higher)

NG → **Repair or replace harness or connector.**

OK

3	Check voltage between terminal SPD of ECM connector and body ground.

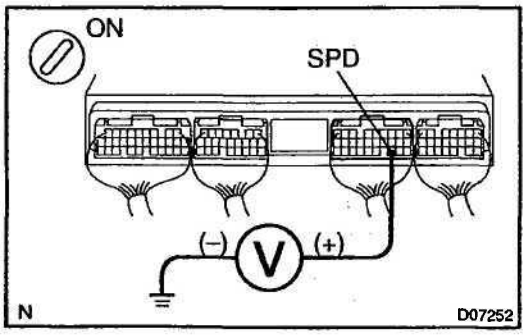

PREPARATION:
Turn ignition switch ON.
CHECK:
Measure voltage between terminal SPD of ECM connector and body ground.
OK:
Voltage: 9 – 14 V

NG → **Check for open in harness and connector between instrument panel J/B and ECM (See page IN–30).**

OK

4	Check for open in harness and connector between instrument panel J/B and combination meter (See page IN–30).

NG → **Repair or replace harness or connector.**

5	Check **ECM** (See page **IN–30).**

NG → Replace ECM.

OK

Check and repair transaxle (clutch, brake or gear etc,).

DTC	P0710	Transmission Fluid Temperature Sensor Malfunction (ATF Temperature Sensor)

CIRCUIT DESCRIPTION

The ATF temperature sensor converts fluid temperature into a resistance value which is input into the ECM.

DTC No.	DTC Detecting Condition	Trouble Area
P0710	Either (a) or (b) is detected for 0.5 sec. or more. (2-trip detection logic) (a) Temperature sensor resistance is less than 79 ft (b) After the engine has been operating for 15 minutes or more, the resistance at the temp. sensor is more than 156 kΩ	• Open or short in ATF temperature sensor • ATF temperature sensor • ECM

WIRING DIAGRAM

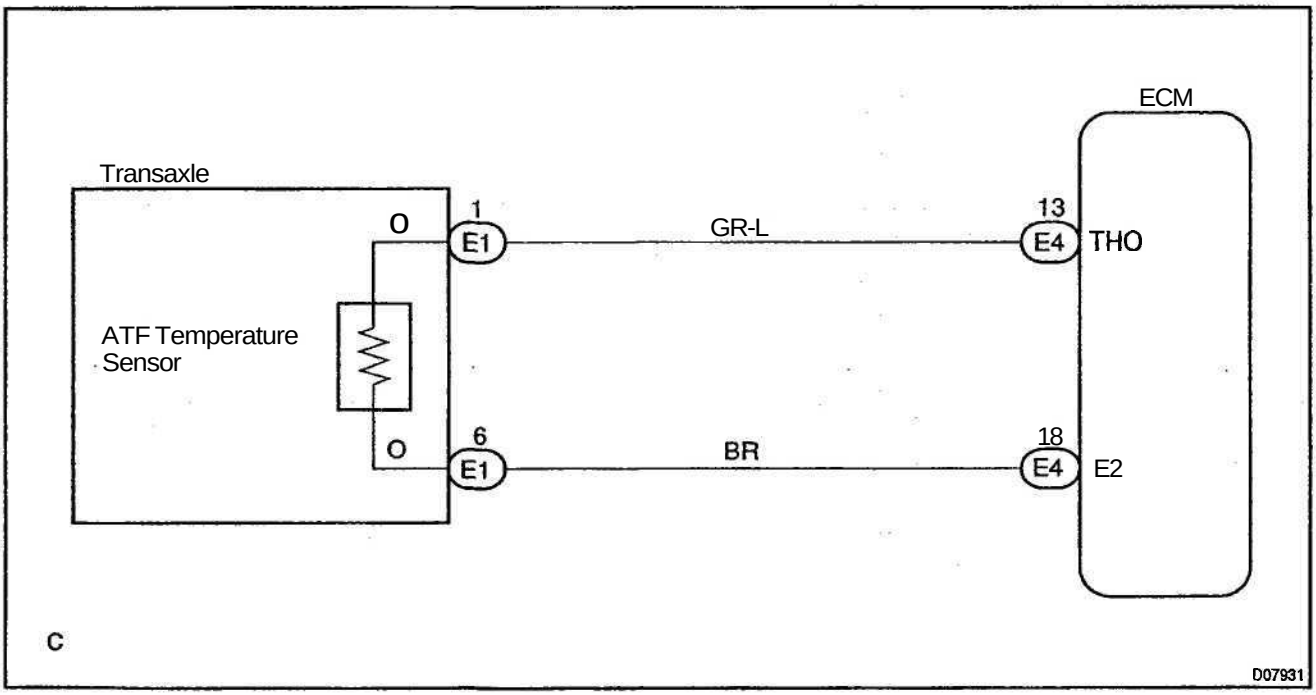

INSPECTION PROCEDURE

1	Check ATF temperature sensor.

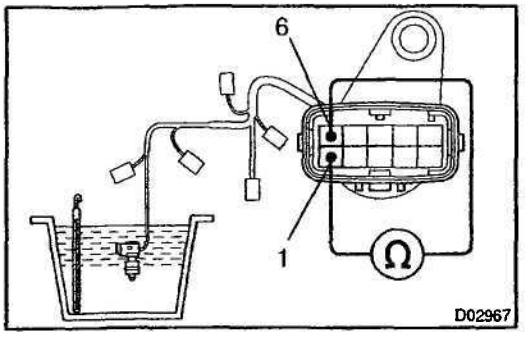

PREPARATION:
Remove the solenoid wiring (See page AX–9).
CHECK:
Measure resistance between terminals of ATF temperature sensor at 25 °C (77 °F) and 110 °C (230 °F).
OK:

Resistance (Approx.):
25 °C (77 °F): 3.5 kΩ
110 °C (230 °F): 247 ft

NG → **Replace the solenoid wiring.**

OK

2	Check harness and connector between solenoid wiring and ECM (See page IN–30).

NG → **Repair or replace the harness or connector.**

OK

Check and replace the ECM (See page IN–30).

DTC	P0750, P0755	Shift Solenoid A/B Malfunction (Shin Solenoid Valve No. 1/No. 2)

SYSTEM DESCRIPTION

The ECM uses signals from the vehicle speed sensor to detect the actual gear position (1st, 2nd, 3rd or O/D gear).
Then the ECM compares the actual gear with the shift schedule in the ECM memory to detect mechanical trouble of the shift solenoid valves and valve body.

DTC No.	DTC Detecting Condition	Trouble Area
P0750 P0755	During normal driving, the gear required by the ECM does not match the actual gear (2–trip detection logic)	• Shift solenoid valve No. 1/No. 2 is stuck open or closed • Valve body is blocked up or stuck

HINT:
Check the shift solenoid valve No. 1 when DTC P0750 is output and check the shift solenoid valve No. 2 when DTC P0755 is output.

INSPECTION PROCEDURE

1	Check shift solenoid valve No. 1 or No. 2 operation.

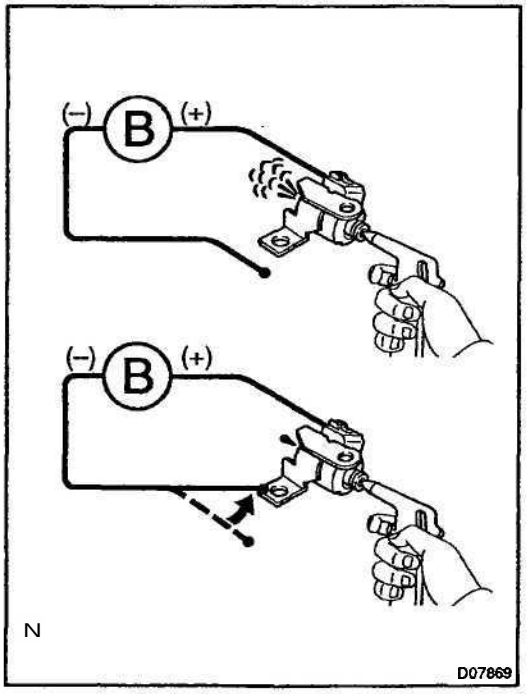

PREPARATION:
(a) Remove the oil pan.
(b) Remove the shift solenoid valve No. 1 or No. 2.

CHECK:
(a) By applying 490 kPa (5 kgf/cm^2, 71 psi) of compressed air, check that the solenoid valve does not leak air.
(b) When battery positive voltage is supplied to the shift solenoid valve, check that the valve opens.

OK:
(a) Solenoid valve does not leak air.
(b) Solenoid valve opens.

NG → **Replace the shift solenoid valve No. 1 or No. 2.**

OK

2	Check the valve body (See page **DI–234**).

NG → Repair or replace the valve body.

O\K

Repair or replace the transaxle.

DTC	P0753,P0758	Shift Solenoid A/B Electrical Malfunction (Shift Solenoid Valve No. 1/No. 2)

CIRCUIT DESCRIPTION

Shifting from 1 st to O/D is performed in combination with ON and OFF of the shift solenoid valve No. 1 and No. 2 controlled by ECM. If an open or short circuit occurs in either of the solenoid valves, the ECM controls the remaining normal solenoid valve to allow the vehicle to be operated smoothly (Fail safe function).

Range	NORMAL			SHIFT SOLENOID VALVE NO. 1 MALFUNCTIONING			SHIFT SOLENOID VALVE NO. 2 MALFUNCTIONING			BOTH SHIFT SOLENOID VALVES MALFUNCTIONING
	Solenoid valve		Gear	Solenoid valve		Gear	Solenoid valve		Gear	Gear when shift selector is manually operated
	No. 1	No. 2		No. 1	No. 2		No. 1	No. 2		
D	ON	ON	1st	X	ON	3rd	ON	X	1st	O/D
	ON	OFF	2nd	X	OFF	3rd	OFF	X	O/D	O/D
	OFF	OFF	3rd	X	OFF	3rd	OFF	X	O/D	O/D
	OFF	ON	O/D	X	ON	O/D	OFF	X	O/D	O/D
2	ON	ON	1st	X	ON	3rd	ON	X	1st	3rd
	ON	OFF	2nd	X	OFF	3rd	OFF	X	3rd	3rd
	OFF	OFF	3rd	X	OFF	3rd	OFF	X	3rd	3rd
L	ON	ON	1st	X	ON	1st	ON	X	1st	1st
	ON	OFF	2nd	X	OFF	2nd	ON	X	1st	1st

X: Malfunctions

HINT:

Check the sift solenoid valve No. 1 when DTC P0753 is output and check the shift solenoid valve No. 2 when DTC P0758 is output.

DTC No.	DTC Detecting Condition	Trouble Area
P0753/62 P0758/63	The ECM checks for an open or short circuit in the shift solenoid valve No. 1/No. 2 circuit when it changes. The ECM records DTC P0753 or P0758 if condition (a) or (b) is detected once, but it does not blink the MIL After ECM detects condition (a) or (b) continuously 2 times or more in 1-trip, it causes the MIL to light up until condition (a) or (b) disappears. After that, if the ECM detects condition (a) or (b) once, it starts lighting up MIL again. (a) Solenoid resistance is 8 Ω or less (short circuit) when the solenoid is energized. (b) Solenoid resistance is 100 kΩ or more (open circuit) when the solenoid is not energized.	• Open or short in shift solenoid valve No. 1/No. 2 circuit • Shift solenoid valve No. 1/No. 2 • ECM

Fail safe function:

If either of the solenoid valve circuits develops an open or short, the ECM turns the other solenoid valve ON and OFF to shift to the gear positions shown in the table above. The ECM also turns the shift solenoid valve ST OFF at the same time. If both solenoids malfunction, hydraulic control cannot be performed electronically and must be done manually.

Manual shifting as shown in the above table must be done (In the case of a short circuit, the ECM stops sending current to the short circuited solenoid).

WIRING DIAGRAM

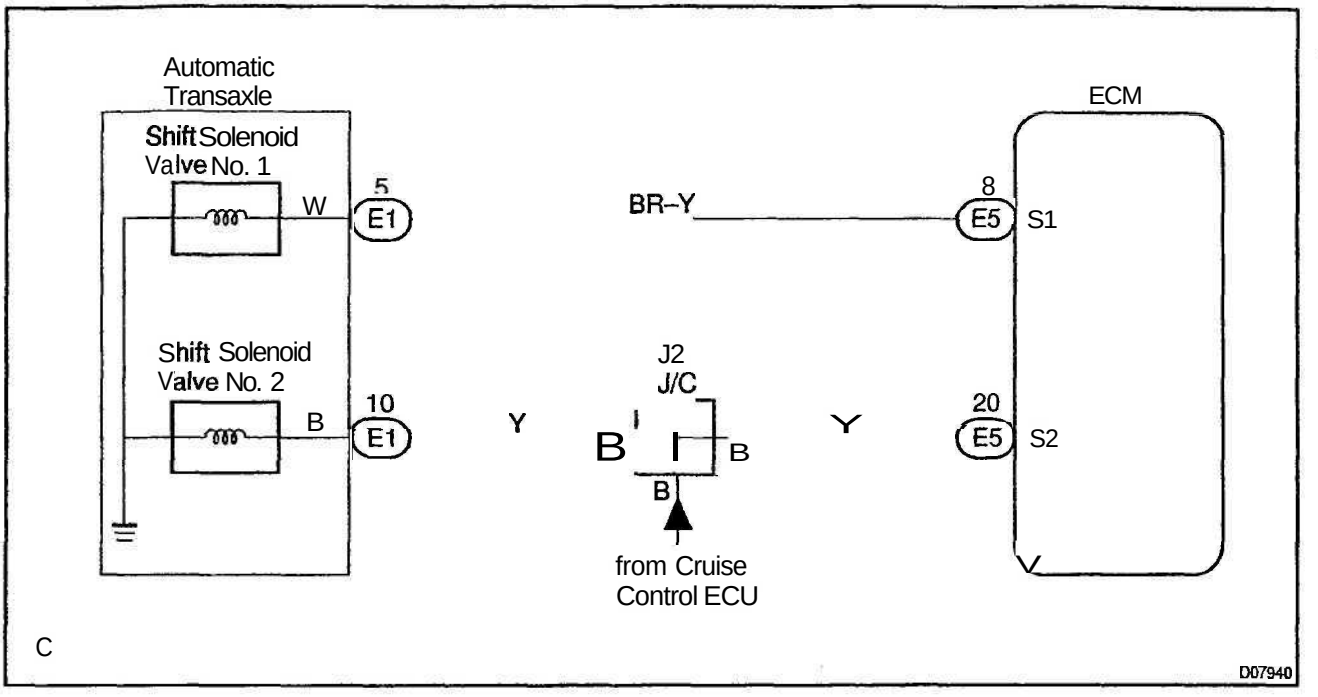

INSPECTION PROCEDURE

1	**Measure resistance between terminal S1 or S2 of ECM and body ground.**

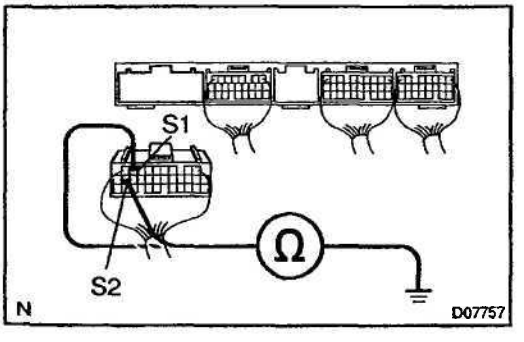

PREPARATION:
Disconnect the connector from ECM.

CHECK:
Measure resistance between terminal S1 or S2 of ECM and body ground.

OK:

Resistance: 11 – 15 Ω at 20 °C (68 °F)

OK	**Check and replace the ECM (See page IN–30).**

NG

2	**Measure harness and connector between ECM and automatic transmission solenoid connector.**

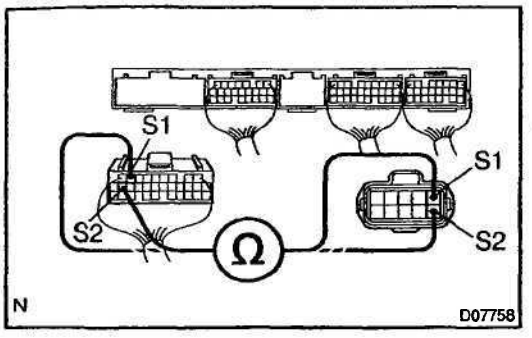

PREPARATION:
Disconnect the solenoid connector from the automatic transaxle.

CHECK:
Measure the harness and connector between terminal S1 or S2 of ECM and terminal S1 or S2 of solenoid connector.

OK:

Resistance: 0 Ω

NG → **Repair or replace the harness or connector (See page IN–30).**

OK

3	Check connection of the connectors.

NG → Connect the connectors correctly.

OK

4	Check shift solenoid valve No. 1 or No. 2.

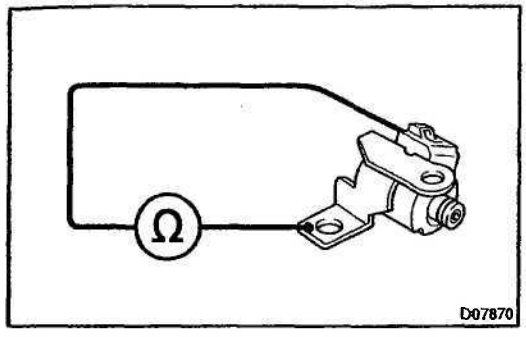

PREPARATION:

(a) Jack up the vehicle.
(b) Remove the oil pan.
(c) Disconnect the solenoid connector.
(d) Remove the shift solenoid valve No. 1 or No. 2.

CHECK:

Measure resistance between solenoid connector and body ground.

OK:

Resistance: 11 – 15 Ω at 20 °C (68 °F)

NG → **Replace the solenoid valve.**

OK →

Repair or replace the solenoid wire.

DTC	P0770	Shift Solenoid E Malfunction (Shift Solenoid Valve SL)

SYSTEM DESCRIPTION

The ECM uses the signals from the throttle position sensor, air-flow meter and crankshaft position sensor to monitor the engagement condition of the lock–up clutch.

Then the ECM compares the engagement condition of the lock-up clutch with the lock–up schedule in the ECM memory to detect mechanical trouble of the shift solenoid valve SL, valve body and torque converter clutch or automatic transaxle (clutch, brake or gear etc.).

DTC No.	DTC Detecting Condition	Trouble Area
P0770	• Lock–up does not occur when driving in the lock–up range (normal driving at 80 km/h [50 mph]), or lock–up remains ON in the lock–up OFF range. (2–trip detection logic) • When lock–up is ON, clutch or brake slips or gear is broken. (2–trip detection logic)	• Shift solenoid valve SL is stuck open or closed • Valve body blocked up or stuck • Lock–up clutch • Automatic transaxle (clutch, brake or gear etc.)

INSPECTION PROCEDURE

1	Check solenoid valve SL operation

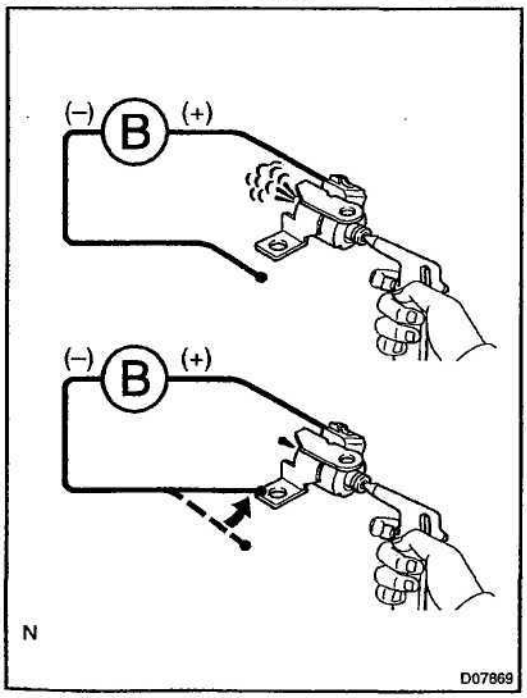

PREPARATION:

(a) Remove the oil pan.

(b) Remove the solenoid valve SL

CHECK:

(a) Applying 490 kPa (5 kgf/cm^2, 71 psi) of compressed air, check that the solenoid valve does not leak air.

(b) When battery positive voltage is supplied to the shift solenoid valve, check that the solenoid valve opens.

OK:

(a) Solenoid valve does leak air.

(b) Solenoid valve opens.

NG	Replace the solenoid valve SL.

OK

2	Check valve body (See page **DI–234**).

NG → Repair or replace the valve body.

OK

3	Check the torque converter clutch (See page **AX–36**).

NG → Repair the torque converter clutch.

OK

Repair the transaxle (See page **AX–30**).

DTC	P0773	Shift Solenoid E **Electrical** Malfunction (Shift Solenoid Valve SL)

CIRCUIT DESCRIPTION

The shift solenoid valve SL is turned ON and OFF by signals from the ECM to control the hydraulic pressure acting on the lock–up relay valve, which then controls operation of the lock–up clutch.
Fail safe function:
If the ECM detects a malfunction, it turns the shift solenoid valve SL OFF.

DTC No.	DTC Detecting Condition	Trouble Area
P0773	Either (a) or (b) is detected for 1 time. (2–trip detection logic) (a) Solenoid resistance is 8 a or less when solenoid is energized. (b) Solenoid resistance is 1 00 kΩ or more when solenoid is not energized.	• Open or short in shift solenoid valve SL circuit • Shift solenoid valve SL • ECM

WIRING DIAGRAM

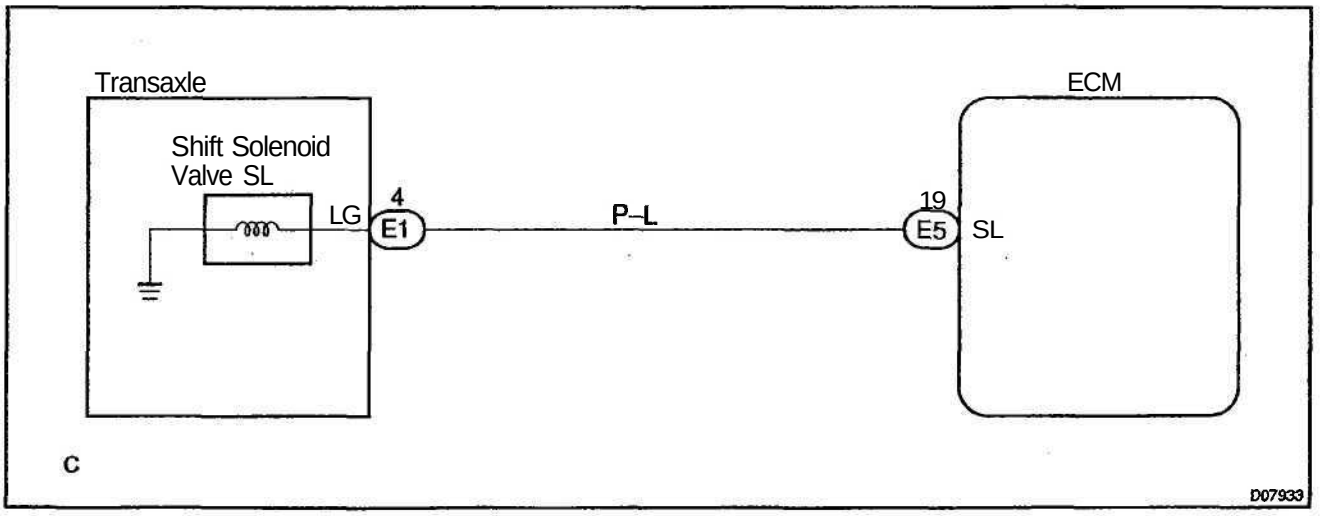

INSPECTION PROCEDURE

1	Measure resistance between terminal SL of ECM and body ground.

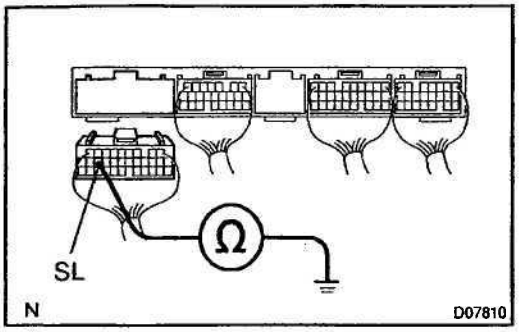

PREPARATION:
Disconnect the connector from ECM.
CHECK:
Measure resistance between terminal SL of ECM and body ground.
OK:
Resistance: 11 – 15 Ω at 20 °C (68 °F)

OK	**Check and replace the ECM (See page IN–30).**

NG

2	Measure resistance of harness and connector between ECM and automatic transaxle solenoid connector.

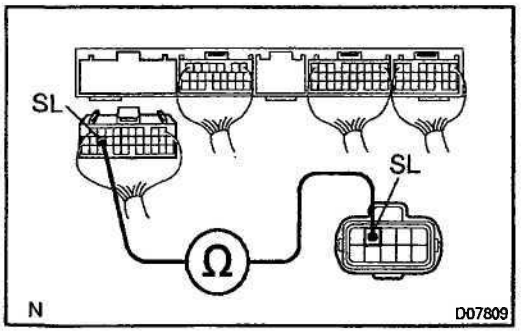

PREPARATION:
Disconnect the solenoid connector from the transaxle.
CHECK:
Measure resistance of the harness and connector between terminal SL of ECM and terminal SL of solenoid connector.
OK:
Resistance: 0 Ω

NG	**Repair or replace the harness or connector.**

OK

3	Check shift solenoid valve SL.

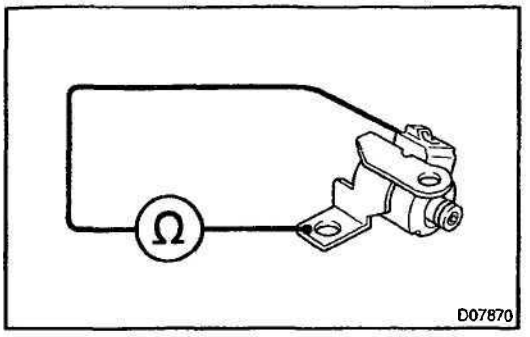

PREPARATION:
(a) Jack up the vehicle.
(b) Remove the oil pan.
(c) Disconnect the shift solenoid valve SL connector.
(d) Remove the shift solenoid valve SL.

CHECK:
Measure resistance between terminal SL of shift solenoid valve and solenoid body.

OK:
Resistance: 11 – 15 £1 at 20 °C (68 °F)

NG → **Replace the shift solenoid valve SL.**

OK

Replace or repair the solenoid wire, harness and connector between ECM and automatic transaxle solenoid connector.

DI4Z1–02

DTC	P1520	Stop Light Switch Signal Malfunction

CIRCUIT DESCRIPTION

The purpose of this circuit is to prevent the engine from stalling, while driving in lock–up condition, when brakes are suddenly applied.
When the brake pedal is operated, this switch sends a signals to ECM. Then the ECM cancels operation of the lock–up clutch while braking is in progress.

DTC No.	DTC Detecting Condition	Trouble Area
P1520	No stop light switch signal to ECM during driving. (2–trip detection logic)	• Open or short in stop light switch circuit • Stop light switch •ECM

WIRING DIAGRAM

See page DI–130.

INSPECTION PROCEDURE

See page DI–130.

DTC	P1725	NT Revolution Sensor Circuit Malfunction (Input Turbine Speed Sensor)

CIRCUIT DESCRIPTION

This sensor detects the rotation speed of the input turbine. By comparing the input turbine speed signal (NT) and the counter gear speed sensor signal (NC), the ECM detects the shift timing of the gears and appropriately controls the engine torque and hydraulic pressure in response to various conditions, thus performing smooth gear shifting.

DTC No.	DTC Detecting Condition	Trouble Area
P1725	The ECM detects conditions (a), (b), (c), (d) and (e) continuity for 5 secs or more. (1–trip detection logic) (a) Gear change not being performed (b) Gear position: 2nd, 3rd or O/D gear (c) Solenoid valves and park/neutral position switch are normal (d) T/M input shaft rpm: 300 rpm or less (e) T/M output shaft rpm: 1,000 rpm or more	• Open or short in input turbine (NT) speed sensor circuit • Input turbine (NT) speed sensor • ECM

WIRING DIAGRAM

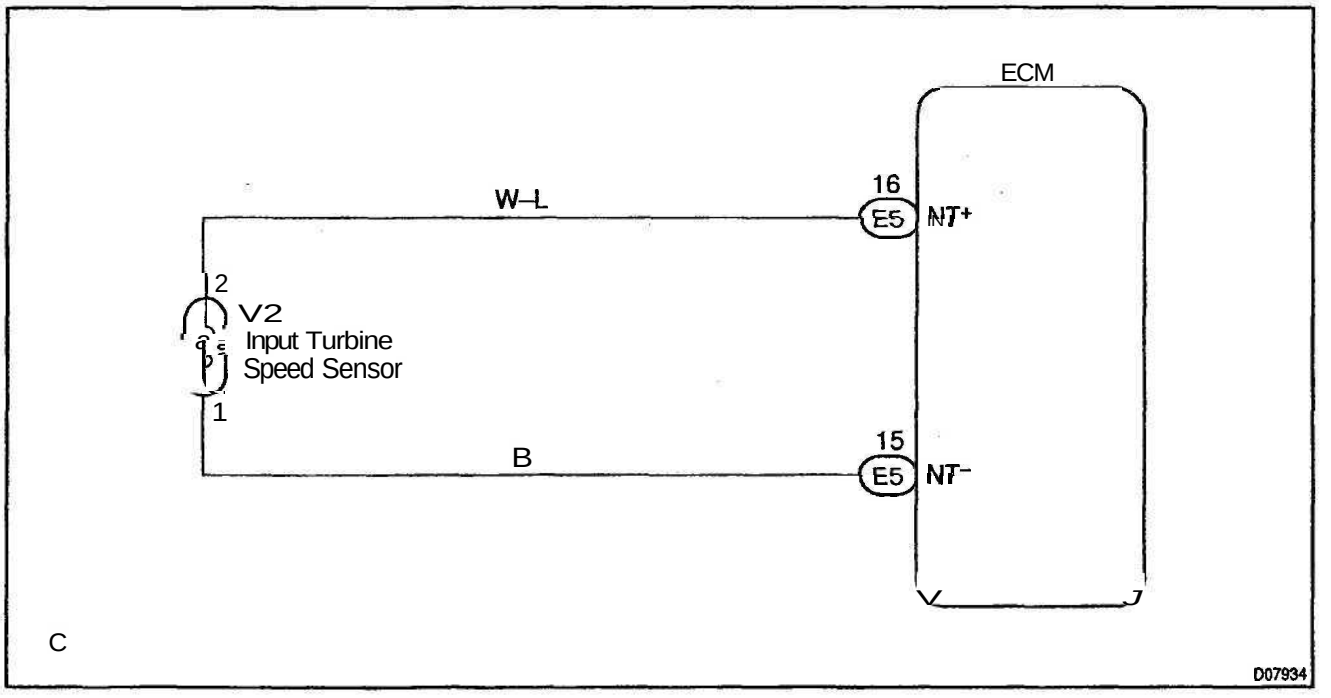

INSPECTION PROCEDURE

1	Check resistance between terminals NT* and NT~ of ECM.

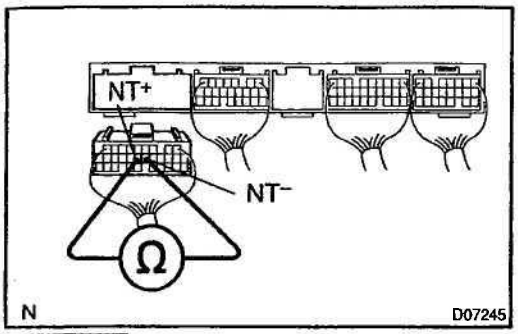

PREPARATION:
Disconnect the connector from ECM.
CHECK:
Check resistance between terminals NT+ and NT– of ECM.
OK:
Resistance: 620 ± 60 a

OK	Check and replace the ECM.

NG

2	Check NT revolution sensor.

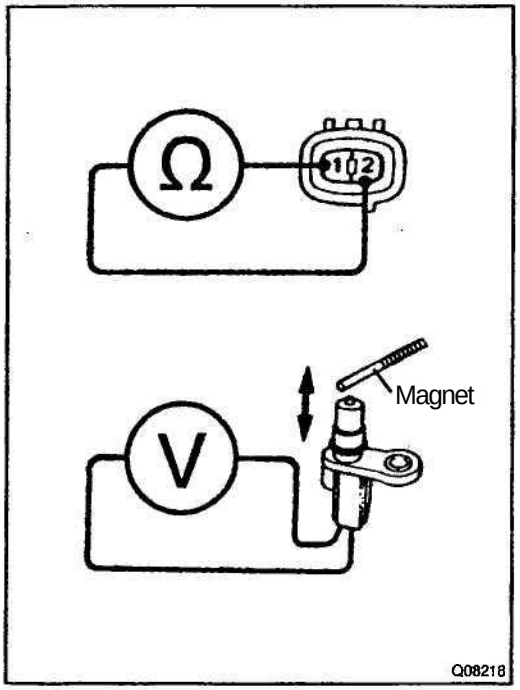

PREPARATION:
Remove the NT revolution speed sensor from transaxle.
CHECK:
(a) Measure resistance between terminals 1 and 2 of speed sensor.
(b) Check voltage between terminals 1 and 2 of the speed sensor when a magnet is put close to the front end of the speed sensor then taken away quickly.
OK:
(a) Resistance: 620 ± 60 Ω at 20 °C (68 °F)
(b) Voltage is generated intermittently.
HINT:
The generated voltage is extremely low.

NG	Replace the NT input shaft speed sensor.

OK

Check and repair the harness and connector between ECM and Turbine speed sensor (See page IN–30).

DTC	P1760	Linear Solenoid for Line Pressure Control Circuit Malfunction (Soleniod valve SLT)

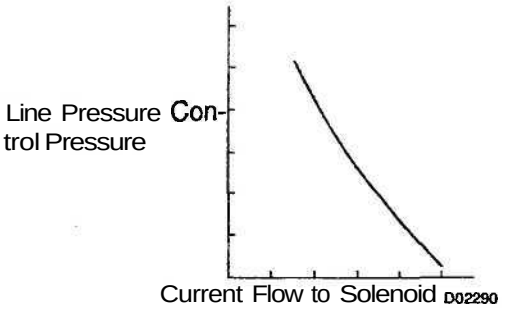

CIRCUIT DESCRIPTION

The throttle pressure that is applied to the primary regulator valve (which modulates line pressure) causes the shift solenoid valve SLT, under electronic control, to precisely and minutely modulate and generate line pressure according to the accelerator pedal effort, or engine power output detected.
This reduces the function of line pressure and provides smooth shifting characteristics.
Upon receiving the throttle valve opening angle signal, ECM controls the line pressure by sending a predetermined (*) duty ratio to the solenoid valve, modulating the line pressure, generating throttle pressure.
(*) Duty Ratio
The duty ratio is the ratio of the period of continuity in one cycle.
For example, if A is the period of continuity in one cycle, and B is the period of non-continuity, then

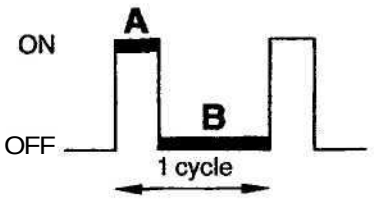

$$\text{Duty Ratio} = \frac{A}{A+B} \times 100\ (\%)$$

DTC No.	DTC Detecting Condition	Trouble Area
P1760/77	(a) or (b) condition below is detected 1 second or more. (a) SLT- terminal: 0V (b) SLT- terminal: 12V	<> Open or short in shift solenoid valve SLT circuit • Shift solenoid valve SLT • ECM

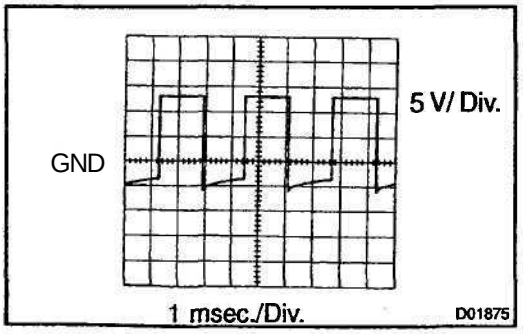

HINT:
Refer to the chart for the wave form between terminals SLT+ and SLT" during engine idling.

WIRING DIAGRAM

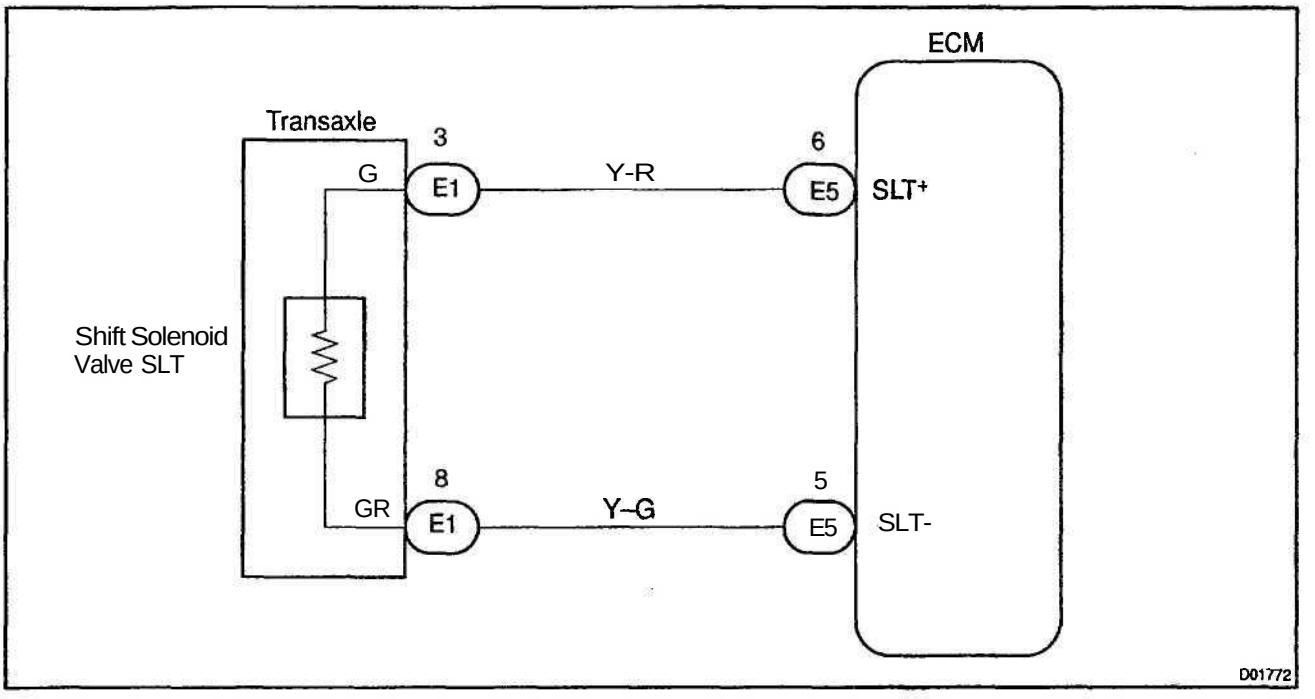

INSPECTION PROCEDURE

1	Check shift solenoid valve SLT.

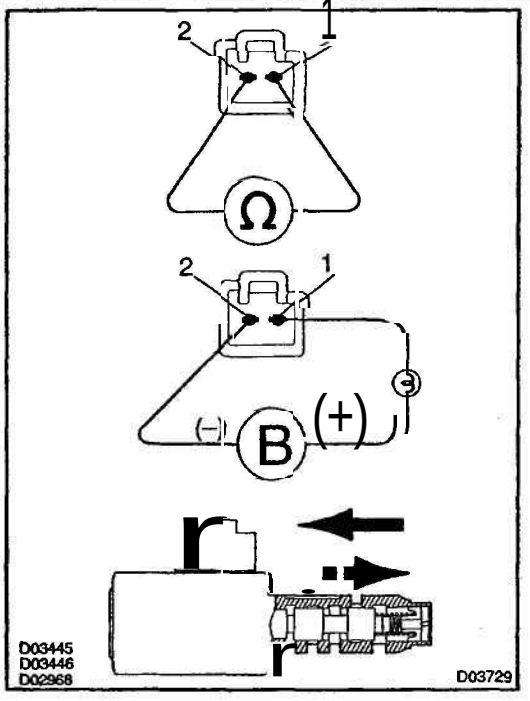

PREPARATION:
(a) Jack up the vehicle.
(b) Remove the oil pan.
(c) Disconnect the solenoid connector.

Check solenoid resistance:

CHECK:
Measure resistance between terminals 1 and 2 of solenoid connector.

OK:
Resistance: 5.0 - 5.6 Ω at 20 °C (68 °F)

Check solenoid operation:

CHECK:
Connect positive (+) lead with an 5 - 6 W bulb to terminal 1 of solenoid connector and negative (-) lead to terminal 2, then check the movement of the valve.

HINT:
The solenoid valve operates with the current of 0 9 — 1 0 A.

OK:

When battery positive voltage is applied.	Valve moves in ■■ direction in illustration.
When battery positive voltage is cut off.	Valve moves in ← direction in illustration.

NG → Replace SLT solenoid valve.

OK

2	Check harness and connector between shift solenoid valve SLT and ECM (See page IN–30).

NG → Repair or replace harness or connector.

OK

Replace ECM (See page IN–30).

DTC	P1780	Neutral Start Switch Malfunction

CIRCUIT DESCRIPTION

The neutral start switch detects the shift lever position and sends signals to the ECM.
The ECM receives signals (P, R, N, D, 2 and L) from the park/neutral position switch.

DTC No.	DTC Detecting Condition	Trouble Area
P1780	When more than one of the following conditions continue for 500 sec. or more. (a) P, N position input signal is ON. (b) P position input signal is ON. (c) N position input signal is ON. (d) L position input signal is ON. (e) 2 position input signal is ON. (f) 3 position input signal is ON. (g) 4 position input signal is ON. (h) D position input signal is ON. (i) R position input signal is ON.	• Shot in park/neutral position switch circuit • Park/neutral position switch • ECM
	When any of following conditions for 500 msec. or more in the M position. (a) P, N position input signal is ON. (b) P position input signal is ON. (c) N position input signal is ON. (d) L position input signal is ON.	

WIRING DIAGRAM

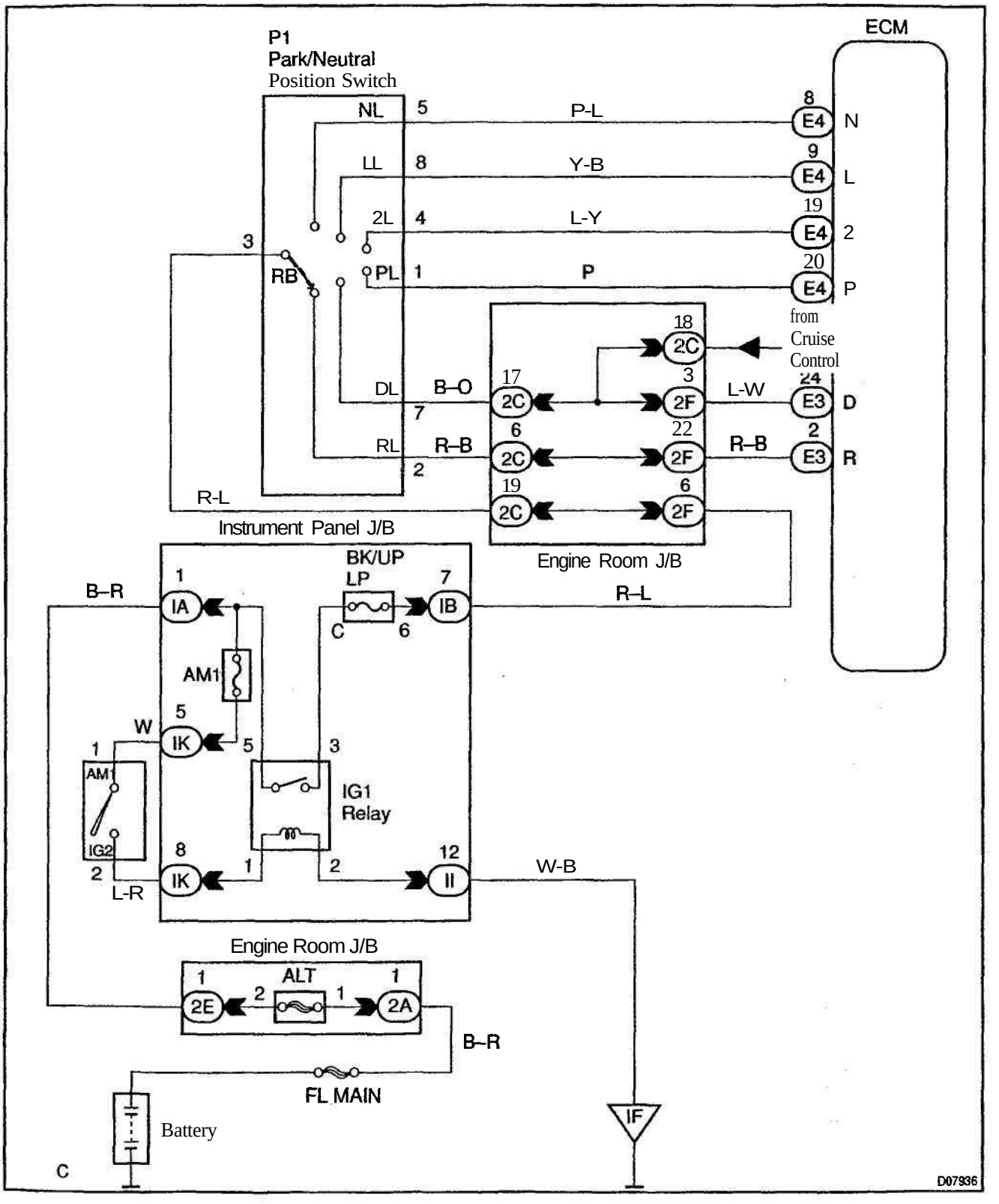

INSPECTION PROCEDURE

1	**Read PNP, REVERSE, 2ND and LOW signals.**

When using TOYOTA hand–held tester:

PREPARATION:

(a) Connect a hand–held tester to the DLC3.

(b) Turn the ignition switch ON and TOYOTA hand–held tester main switch ON.

CHECK:

Shift lever into the P, R, N, 2 and L positions, and read the NSW, REVERSE, 2ND and LOW signals on the hand-held tester.

OK:

Shift range	Signal
2	2ND OFF → ON
L	LOW OFF → ON
R	REVERSE OFF → ON
P, N	NSW OFF → ON

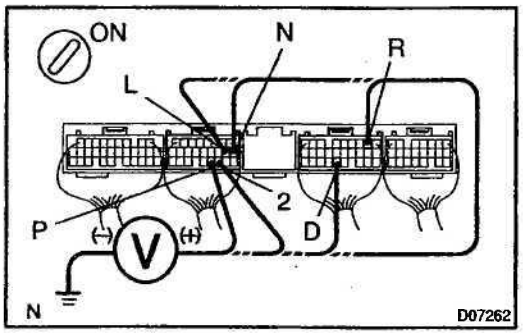

When not TOYOTA using hand-held tester:

PREPARATION:

Turn the ignition switch ON.

CHECK:

Measure voltage between each of terminals P, R, N, D, 2 and L of ECM and body ground when the shift lever is shifted to the following positions.

OK:

Position	P-Body ground	R–Body ground	N-Body ground	D–Body ground	2-Body ground	L-Body ground
P	9-14V	0V	0V	0V	0V	0V
R	0V	9-14V	0V	0V	0V	0V
N	0V	0V	9-14V	0V	0V	0V
D	0V	0V	0V	9-14V	0V	0V
2	0V	0V	0V	0V	9-14V	0V
L	0V	0V	0V	0V	0V	9-14V

HINT:

*: The voltage will drop slightly due to lighting up of the back up light.

OK	**Check and replace the ECM.**

NG

2	Check park/neutral position switch.

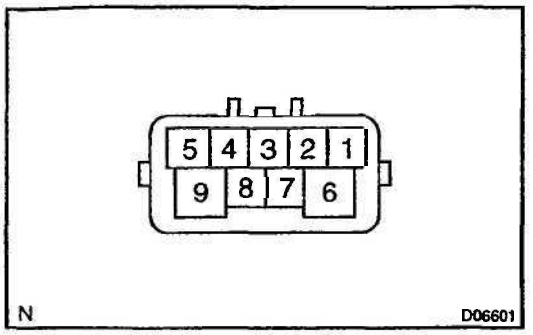

PREPARATION:
Remove the park/neutral position switch.

CHECK:
Check continuity between each terminal shown below when the shift lever is moved to each position.

Shift position	Terminal No. to continuity	
P	1-3	6-9
R	2-3	-
N	3-5	6-9
D	3-7	-
2	3-4	-
L	3-8	-

OK:
There is continuity.

NG → Replace the park/neutral position switch.

OK ↓

3	Check harness and connector between battery and park/neutral position switch, park/neutral position switch and ECM (See page IN-30).

NG → Repair or replace the harness and connector.

OK ↓

Check and replace the ECM (See page IN-30).

D67X-03

DTC	P1790	ST Solenoid Valve Circuit Malfunction

CIRCUIT DESCRIPTION

Shift solenoid valve ST is switched ON–OFF by a signal from ECM so that let in or out timing of 2nd brake is adjusted by operating orifice control valve. Therefore, ST solenoid operates when letting in or out reverse clutch.
If it is broken, the shift shock becomes big.

DTC No.	DTC Detecting Condition	Trouble Area
P1790	ECU memorizes DTC P1790 if (a) or (b) condition below is detected once or more, but ECU does not start MIL blinking. (a) Solenoid resistance is 30 Ω or lower (short circuit) when solenoid energized. (b) Solenoid resistance is 100 kΩ or higher (open circuit) when solenoid is not energized.	• Open or short in shift solenoid valve ST circuit • Shift solenoid valve ST • MIL

WIRING DIAGRAM

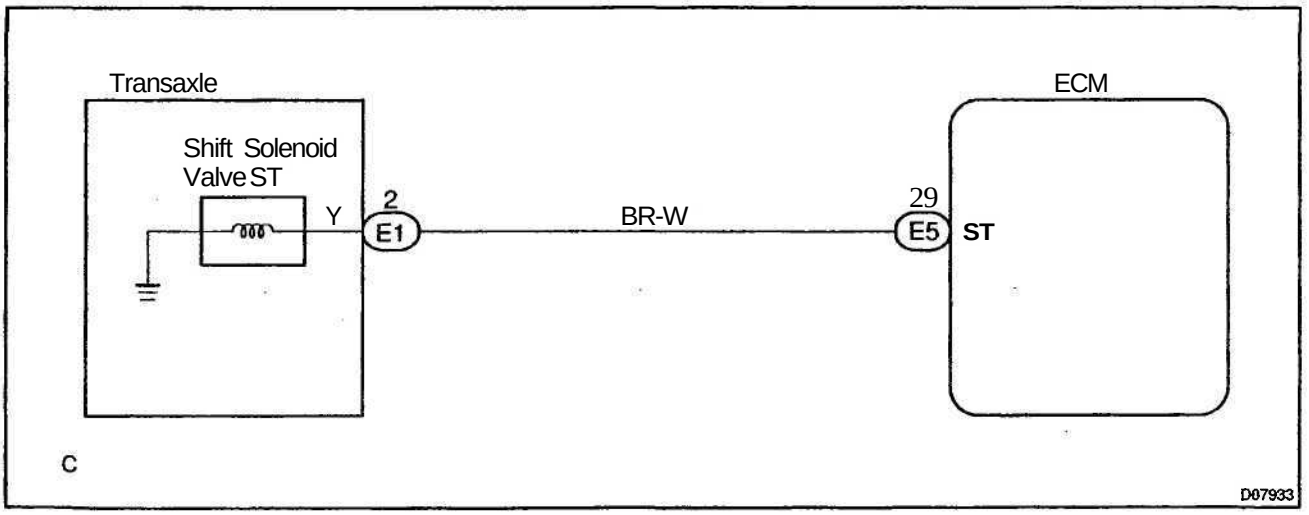

INSPECTION PROCEDURE

1	**Measure resistance between terminal ST of ECM and body ground.**

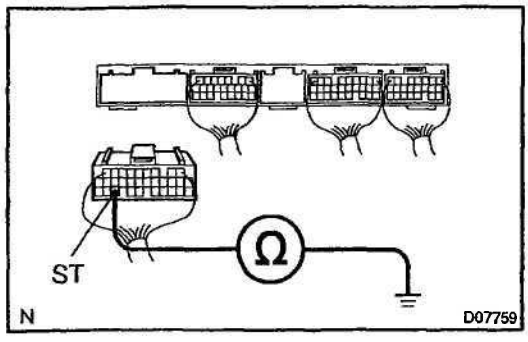

PREPARATION:
Disconnect the connector from ECM.
CHECK:
Measure resistance between terminal ST of ECM and body ground.
OK:
Resistance: 11 – 15 ft at 20 °C (68 °F)

OK	**Check and replace the ECM See page IN–30).**

NG

2	**Measure harness and connector between ECM and automatic transaxle solenoid connector.**

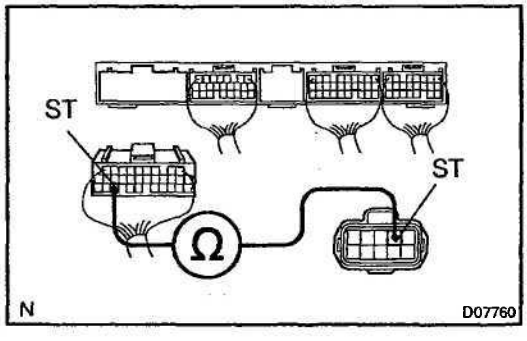

PREPARATION:
Disconnect the solenoid connector from the automatic transaxle.
CHECK:
Measure the harness and connector between terminal ST of ECM and terminal ST of solenoid connector.
OK:
0 Ω

NG	**Repair or replace the harness or connector.**

OK

3	Check connection of the connectors.

NG	Connect the connectors correctly.

OK

4	Check shift solenoid valve ST.

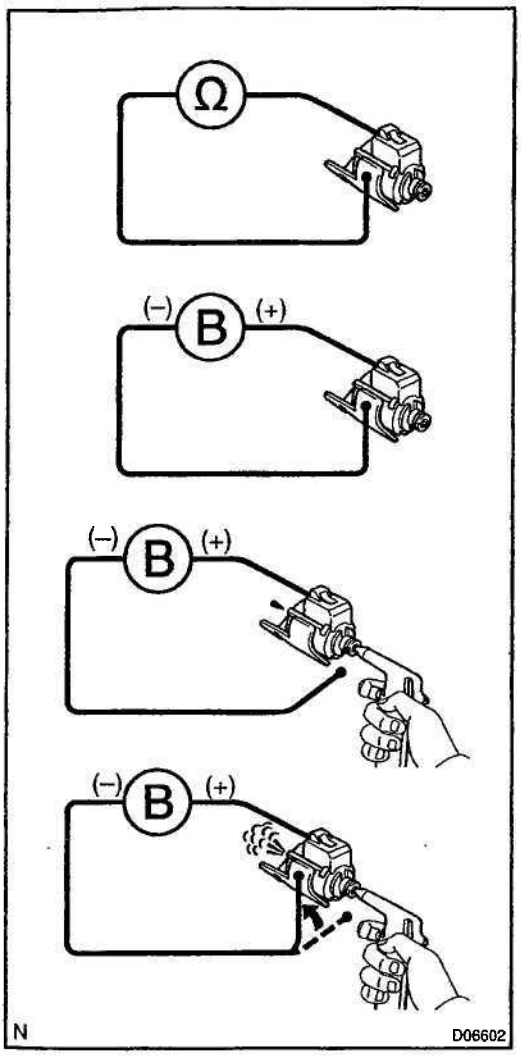

Electrical check:

PREPARATION:

(a) Jack up the vehicle.
(b) Remove the oil pan.
(c) Disconnect the solenoid connector.
(d) Remove the shift solenoid valve ST.

CHECK:

(a) Measure resistance between solenoid connector and body ground.
(b) Connect positive © lead to terminal of solenoid connector, negative © lead to solenoid body.

OK:

(a) Resistance: 11 – 15 a at 20 °C (68 °F)
(b) The solenoid makes an operating noise.

Mechanical check:

PREPARATION:

(a) Jack up the vehicle.
(b) Remove the oil pan.
(c) Disconnect the solenoid connector.
(d) Remove the shift solenoid valve ST.

CHECK:

(a) Applying 490 kPa (5 kgf/cm^2, 71 psi) of compressed air, check that the solenoid valves do not leak air.
(b) When battery positive voltage is supplied to the shift solenoid valves, check that the solenoid valve opens.

OK:

(b) Solenoid valve does not leak air.
(a) Solenoid valve opens.

NG → **Replace the solenoid valve.**

OK

Repair or replace the solenoid wire.

DI690-03

O/D Main Switch & O/D OFF Indictor Light Circuit

CIRCUIT DESCRIPTION

The O/D main switch is a momentary type switch. When pressing the O/D main switch, the O/D OFF indicator light lights up and ECM prohibits shifting to O/D, and when pressing it again, the O/D OFF indicator light goes off and ECM allows shifting to O/D. Turning the IG switch OFF will reset the O/D OFF indicator light.

WIRING DIAGRAM

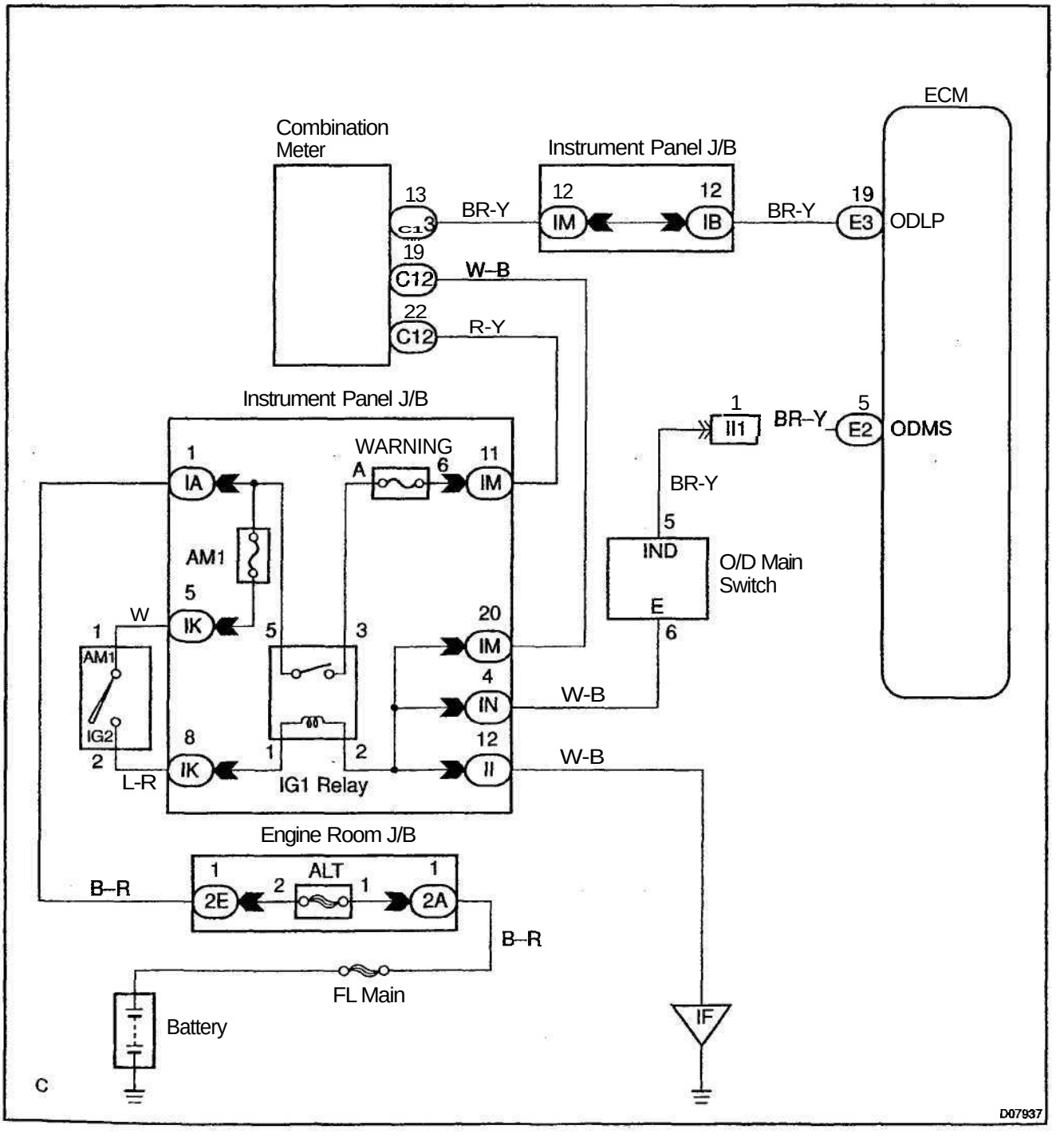

INSPECTION PROCEDURE

1	Check operation of O/D main switch.

PREPARATION:
Turn the ignition switch ON.
CHECK:
(a) Check O/D OFF indicator light when O/D main switch is pushed in to ON.
(b) Check O/D OFF indicator light when O/D main switch is pushed again.
OK:
(a) O/D OFF indicator light lights up.
(b) O/D OFF indicator light goes off.

OK	**Proceed to next inspection shown on problem symptoms tables (See page DI–234).**

NG

2	Check and replace the combination meter (See page BE-2).

NG	Replace the combination meter.

OK

3	Check O/D main switch.

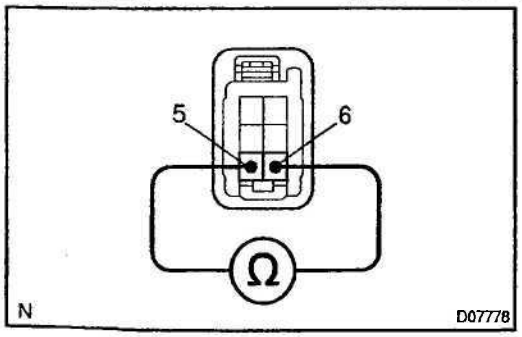

PREPARATION:
Disconnect the O/D main switch connector.
CHECK:
Check continuity between terminals 5 and 6 of O/D main switch connector.
OK:

O/D main switch condition	Specified condition
Press continuously O/D main switch	Continuity
Release O/D main switch	No continuity

NG	**Replace and repair O/D main switch.**

OK

4	Check voltage between terminal ODMS of ECM and body ground.

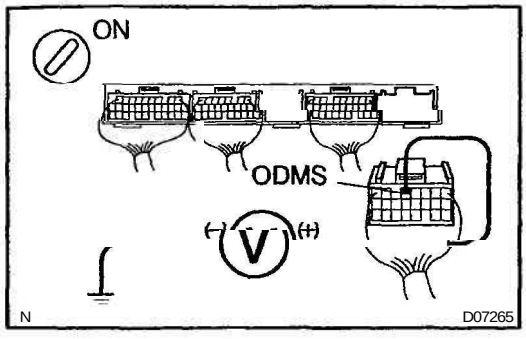

PREPARATION:
Turn the ignition switch ON.
CHECK:
Check voltage between terminal ODMS of ECM and body ground when O/D main switch is ON and OFF.
OK:

O/D main switch	Specified voltage
Press continuously O/D main switch	Below 1.0V
Release O/D main switch	10-14V

OK → Check and replace the ECM (See page IN–30).

NG

5	**Check voltage between terminal ODLP of ECM and body ground.**

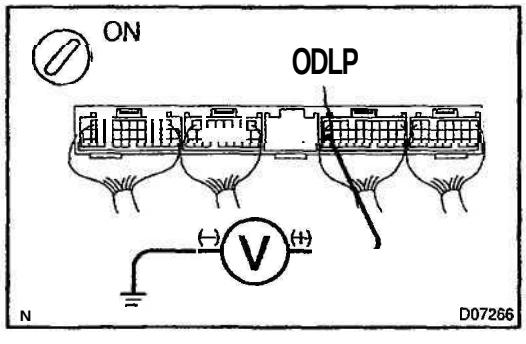

PREPARATION:
(a) Disconnect the connector of ECM.
(b) Turn the ignition switch ON.
CHECK:
Check voltage between terminal ODLP of ECM and body ground.
OK:
Voltage: 7.5 – 14 V

OK → Check and replace the ECM (See page IN–30).

NG

Check and replace harness and connector between combination meter and ECM, O/D main switch and ECM, O/D main switch and body ground (See page IN–30).

O/D Cancel Signal Circuit

CIRCUIT DESCRIPTION

While driving uphill with cruise control activated, in order to minimize gear shifting and provide smooth cruising overdrive may be prohibited temporarily under some condition.
The cruise control ECU sends O/D cut signals to the ECM as necessary and the ECM cancels overdrive shifting until these signals are discontinued.

WIRING DIAGRAM

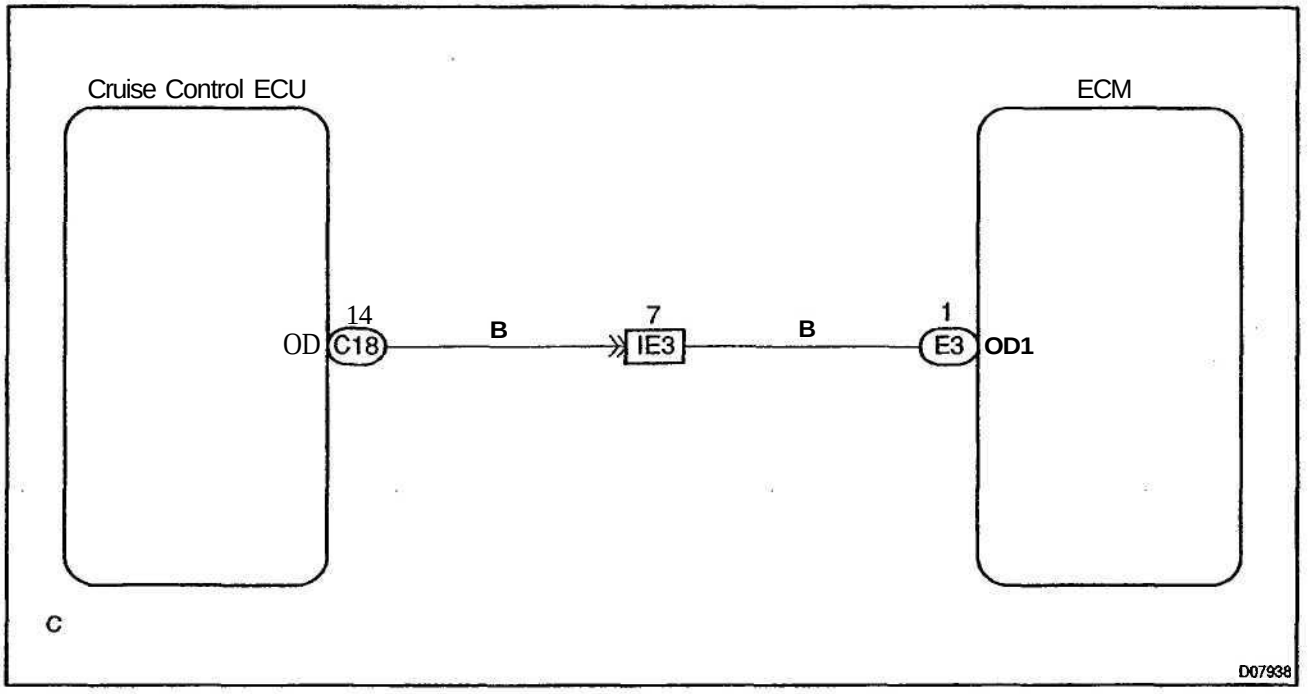

INSPECTION PROCEDURE

1	**Check voltage between terminal OD1 of ECM and body ground.**

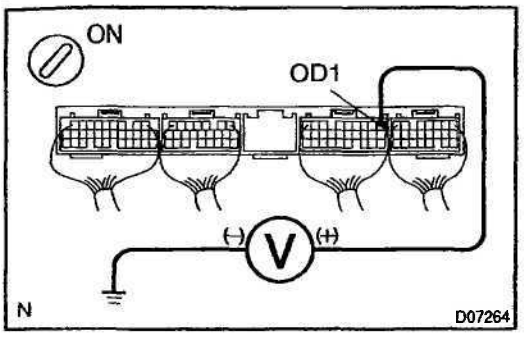

PREPARATION:
Turn the ignition switch ON.
CHECK:
Measure voltage between terminal OD1 of ECM and body ground.
OK:
Voltage: 10 – 14 V

OK	**Proceed to next circuit inspection shown on problem symptoms table (See page DI–234).**

NG

2	Check voltage between terminal OD of cruise control ECU harness side connector and body ground.

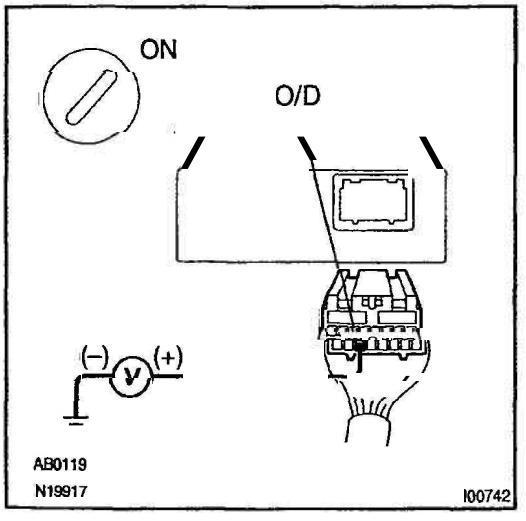

PREPARATION:
(a) Disconnect the cruise control ECU connector.
(b) Turn the ignition switch ON.
CHECK:
Measure voltage between terminal OD of cruise control ECU harness side connector and body ground.
OK:
Voltage: **10 – 14 V**

OK	**Check and replace the cruise control ECU.**

NG

3	Check harness and connector between cruise control ECU and ECM (See page IN–30).

NG → Repair or replace the harness or connector.

OK →

Check and replace the ECM (See page IN–30).

ANTI-LOCK BRAKE SYSTEM WITH ELECTRONIC BRAKE FORCE DISTRIBUTION (EBD)

DI6U7-01

HOW TO PROCEED WITH TROUBLESHOOTING

Troubleshoot in accordance with the procedure on the following pages.

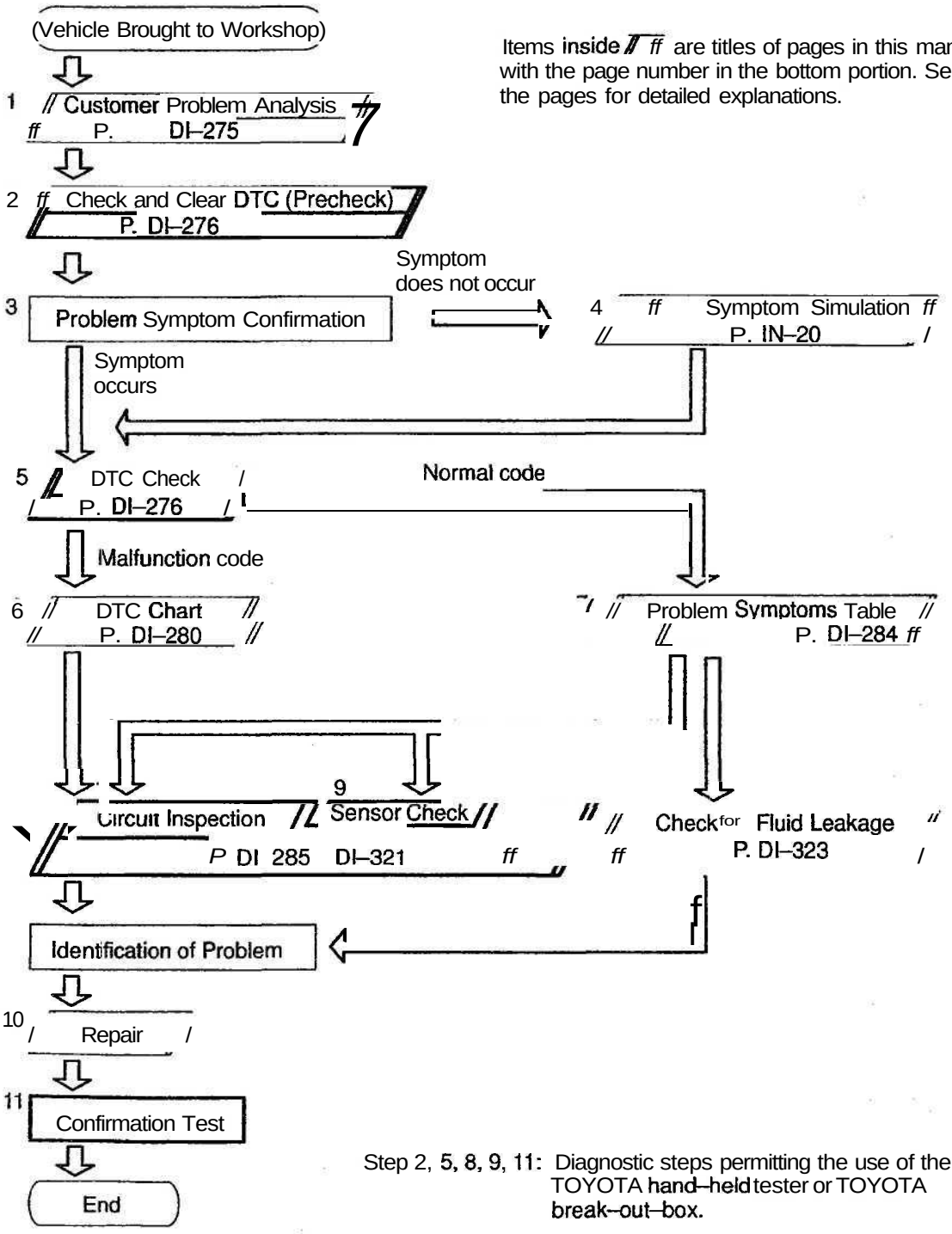

Items inside // ff are titles of pages in this manual, with the page number in the bottom portion. See the pages for detailed explanations.

Step 2, 5, 8, 9, 11: Diagnostic steps permitting the use of the TOYOTA hand–held tester or TOYOTA break–out–box.

Fail safe function:

When a failure occurs in the ABS system, the ABS warning light is lit and the ABS operation is prohibited. In addition to this, when the failure which disables the EBD operation occurs, the brake warning light is lit as well and the EBD operation is prohibited.

DIAM0-01

CUSTOMER PROBLEM ANALYSIS CHECK

ABS Check Sheet

Inspector's Name :

Customer's Name		Registration No.	
		Registration Year	/ /
		Frame No.	
Date Vehicle Brought In	/ /	Odometer Reading	km miles

Date Problem First Occurred	/ /
Frequency Problem Occurs	D **Continuous** D **Intermittent (times a day)**

Symptoms	D ABS does not operate.	
	D ABS does not operate efficiently.	
	ABS **Warning** Light Abnormal	D Remains ON D Does not Light Up
	BRAKE Warning Light Abnormal	D Remains ON D Does not Light Up

DTC Check	1st Time	D Normal Code D Malfunction Code (Code)
	2nd Time	D Normal Code D Malfunction Code (Code)

DIAG–01

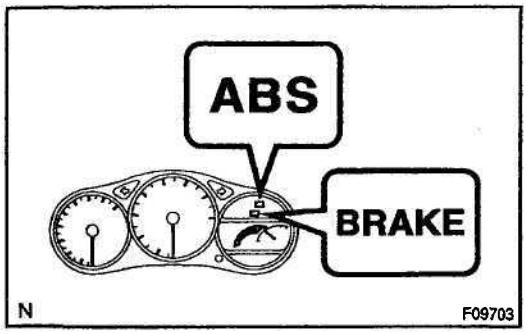

PRE-CHECK

1. DIAGNOSIS SYSTEM

(a) Release the parking brake lever.

(b) Check the indicator.

When the ignition switch is turned ON, check that the ABS warning light and BRAKE warning light goes on for approx. 3 seconds.

HINT:

- When the parking brake is applied or the level of the brake fluid is low, the BRAKE warning light is lit.
- If the indicator check result is not normal, proceed to troubleshooting for the ABS warning light circuit or BRAKE warning light circuit (See page DI–314 or DI–317).

(c) In case of not using TOYOTA hand–held tester:

Check the DTC.

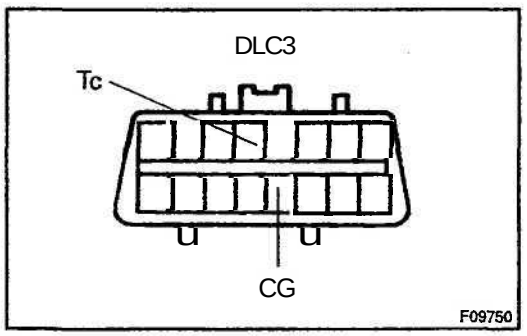

(1) Using SST, connect terminals Tc and CG of DLC3.

SST 09843–18040

(2) Turn the ignition switch ON.

(3) Read the DTC from the ABS warning light on the combination meter.

HINT:

- If no code appears, inspect the diagnostic circuit or ABS warning light circuit (See page DI–319 or DI–314).

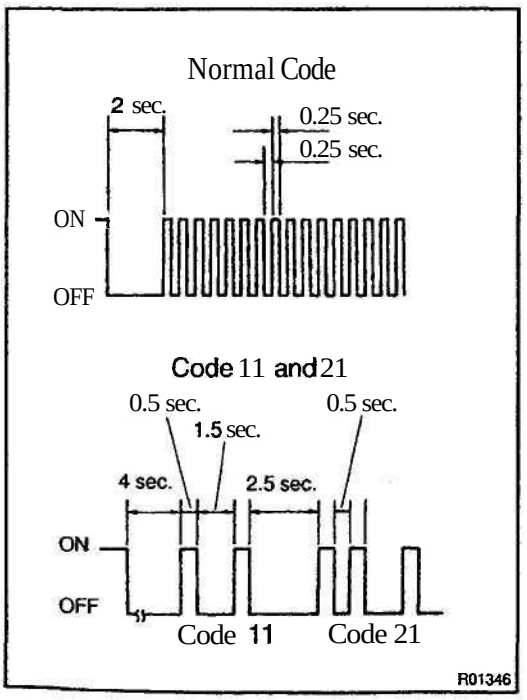

- As an example, the blinking patterns for normal code and codes 11 and 21 are shown on the left.

(4) Codes are explained in the code table on page DI–280.

(5) After completing the check, disconnect terminals Tc and E_1, and turn off the display.

If 2 or more malfunctions are indicated at the same time the lowest numbered DTC will be displayed 1st.

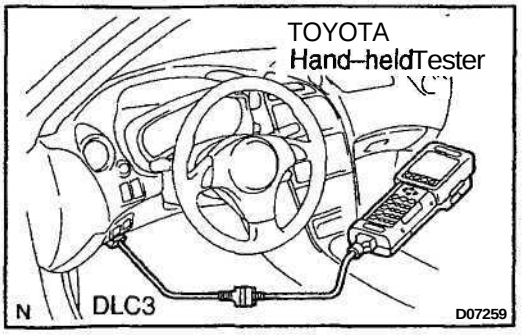

(d) In case of using TOYOTA hand-held tester:
Check the DTC.
(1) Hook up the TOYOTA hand-held tester to the DLC3.
(2) Turn the ignition switch ON.
(3) Read the DTC by following the prompts on the tester screen.
Please refer to the TOYOTA hand-held tester operator's manual for further details.

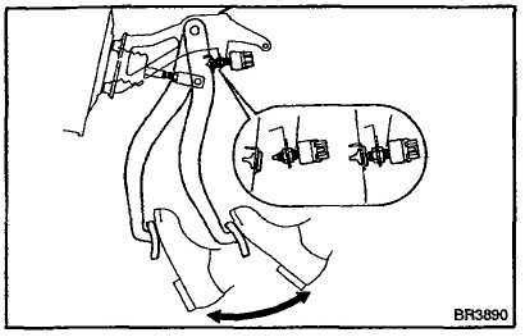

(e) In case of not using TOYOTA hand-held tester:
Clear the DTC.
(1) Using SST, connect terminals Tc and CG of DLC3.
SST 09843-18040
(2) Turn the ignition switch ON.
(3) Clear the DTC stored in ECU by depressing the brake pedal 8 or more times within 5 seconds.
(4) Check that the warning light shows the normal code.
(5) Remove the SST from the terminals of DLC3.
SST 09843-18040

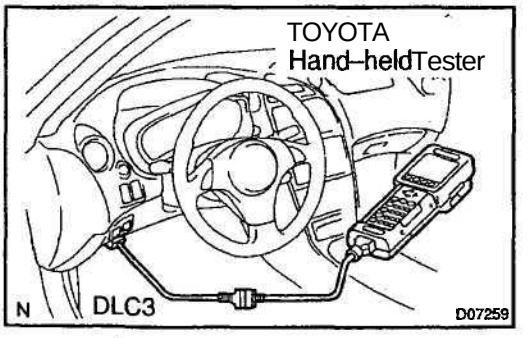

(f) In case of using TOYOTA hand-held tester:
Clear the DTC.
(1) Hook up the TOYOTA hand-held tester to the DLC3.
(2) Turn the ignition switch ON.
(3) Operate the TOYOTA hand-held tester to erase the codes. (See hand-held tester oprater's manual.)

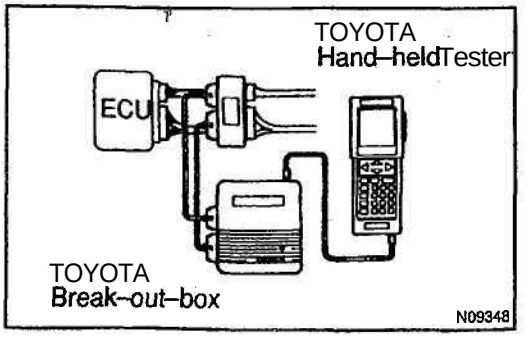

(g) Reference:
Using TOYOTA break-out-box and TOYOTA hand-held tester, measure the ECU terminal values.
(1) Hook up the TOYOTA hand-held tester and TOYOTA break-out-box to the vehicle.
(2) Read the ECU input/output values by following the prompts on the tester screen.

HINT:
TOYOTA hand–held tester has a "Snapshot" function. This records the measured values and is effective in the diagnosis of intermittent problems.
Please refer to the TOYOTA hand–held tester/TOYOTA break–out–box operator's manual for further details.

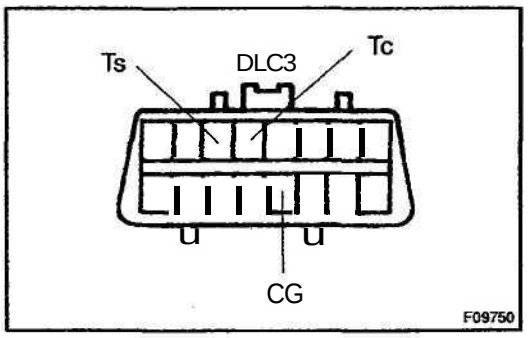

2. SPEED SENSOR SIGNAL

(a) In case of not using TOYOTA hand–held tester:
Check the speed sensor signal.
(1) Turn the ignition switch OFF.
(2) Using SST, connect terminals Ts and CG of DLC3.
SST 09843–18040
(3) Start the engine.

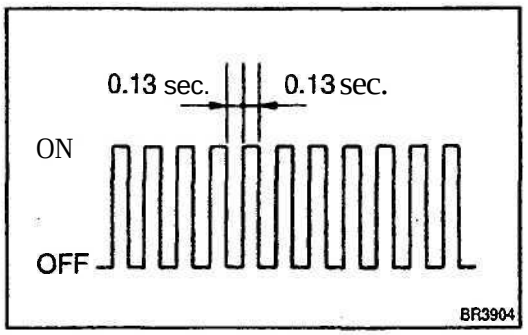

(4) Check that the ABS warning light blinks.

HINT:
If the ABS warning light does not blink, inspect the ABS warning light circuit (See page DI–314).

(5) Drive vehicle straight forward.

HINT:
Drive vehicle faster than 45 km/h (28 mph) for several seconds.

(6) Stop the vehicle.
(7) Using SST, connect terminals Tc and CG of DLC3.
SST 09843–18040
(8) Read the number of blinks of the ABS warning light.

HINT:
- See the list of DTC shown on the next page.
- If every sensor is normal, a normal code is output (A cycle of 0.25 sec. ON and 0.25 sec. OFF is repeated).
- If 2 or more malfunctions are indicated at the same time, the lowest numbered code will be displayed 1st.

Malfunction Code (Example Code 72, 76)

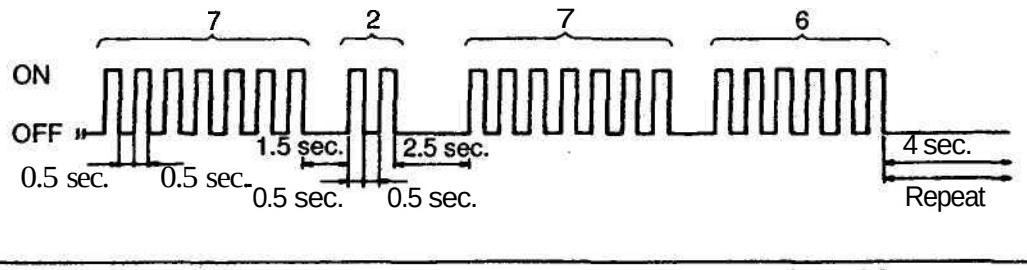

(9) After doing the check, disconnect the SST from terminals Ts and CG, Tc and CG of DLC3, and turn ignition switch OFF.

SST 09843-18040

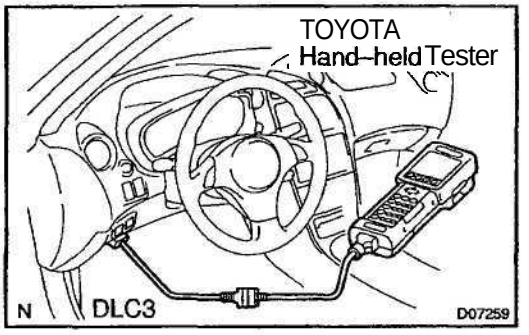

(b) Using TOYOTA hand-held tester:

Check the DTC.

(1) Hook up the TOYOTA hand-held tester to the DLC3.

(2) Do step (3) to (6) on the previous page and this page.

(3) Read the DTC by following the prompts on the tester screen.

Please refer to the TOYOTA hand-held tester operator's manual for further details.

DTC of speed sensor check function:

Code No.	Diagnosis	Trouble Area
C1271/71	Low output voltage of right front speed sensor	• Right front speed sensor • Sensor installation • Right front speed sensor rotor
C1272/72	Low output voltage of left front speed sensor	• Left front speed sensor • Sensor installation • Left front speed sensor rotor
C1273/73	Low output voltage of right rear speed sensor	• Right rear speed sensor • Sensor installation • Right rear speed sensor rotor
C1274/74	Low output voltage of left rear speed sensor	• Left rear speed sensor • Sensor installation • Left rear speed sensor rotor
C1275/75	Abnormal change in output voltage of right front speed sensor	Right front speed sensor rotor
C1276/76	Abnormal change in output voltage of left front speed sensor	Left front speed sensor rotor
C1277/77	Abnormal change in output voltage of right rear speed sensor	Right rear speed sensor rotor
C1278/78	Abnormal change in output voltage of left rear speed sensor	Left rear speed sensor rotor

D6MA-01

DIAGNOSTIC TROUBLE CODE CHART

HINT:

- Using SST 09843–18040, connect the terminals Tc and CG of the DLC3.
- If any abnormality is not found when inspection parts, inspect the ECU.
- If a malfunction code is displayed during the DTC check, check the circuit listed for the code. For details of each code, turn to the page referred to under the "See page" for respective "DTC No." in the DTC chart.

DTC No. (See Page)	Detection Item	Trouble Area
C0278/11 (DI–300)	Open circuit in ABS solenoid relay circuit	• ABS solenoid relay • ABS solenoid relay circuit
C0279/12 (DI–300)	Short circuit in ABS solenoid relay circuit	
C0273/13 (DI–295)	Open circuit in ABS motor relay circuit	•ABS motor relay • ABS motor relay circuit
C0274/14 (DI–295)	Short circuit in ABS motor relay circuit	
C0226/21 (DI–292)	Open or short circuit in 2–position solenoid circuit for right front wheel	• ABS actuator •SFRR or SFRH circuit
C0236/22 (DI-292)	Open or short circuit in 2–position solenoid circuit for left front wheel	• ABS actuator •SFLR or SFLH circuit
C0246/23 (DI-292)	Open or short circuit in 2–position solenoid circuit for right rear wheel	• ABS actuator • SRRR or SRRH circuit
C0256/24 (DI–292)	Open or short circuit in 2–position solenoid circuit for left rear wheel	• ABS actuator • SRLR or SRLH circuit
C0200/31 (DI–285)	Right front wheel speed sensor signal malfunction	• Right front, left front, right rear and left rear speed sensor • Each speed sensor circuit • Speed sensor rotor
C0205/32 (DI-285)	Left front wheel speed sensor signal malfunction	
C0210/33 (DI–285)	Right rear wheel speed sensor signal malfunction	• Rear axle hub • Right rear, left rear speed sensor • Each speed sensor circuit • Speed sensor rotor
C0215/34 (DI–285)	Left rear wheel speed sensor signal malfunction	
C1235/35 (DI-285)	Right front wheel speed sensor have the sensor tips	• Right front, toft front, right rear and left rear speed sensor • Each speed sensor circuit • Speed sensor rotor
C1236/36 (DI-285)	Legt front wheel speed sensor have the sensor tips	
C1238/38 (DI–285)	Right rear wheel speed sensor have the sensor tips	
C1239/39 (DI–285)	Legt raer wheel speed sensor have the sensor tips	
C1241/41 (DI–305)	Power source voltage down	• Battery • Charging system • Power source circuit
C1249/49 (DI–308)	Open circuit in stop light switch circuit	• Stop light switch • Stop light switch circuit • Stop light valve
C1251/51 (DI–310)	Pump motor is locked	• ABS pump motor
Always ON (DI–312)	Malfunction in ECU	• ECU • Battery

DI6MB-01

PARTS LOCATION

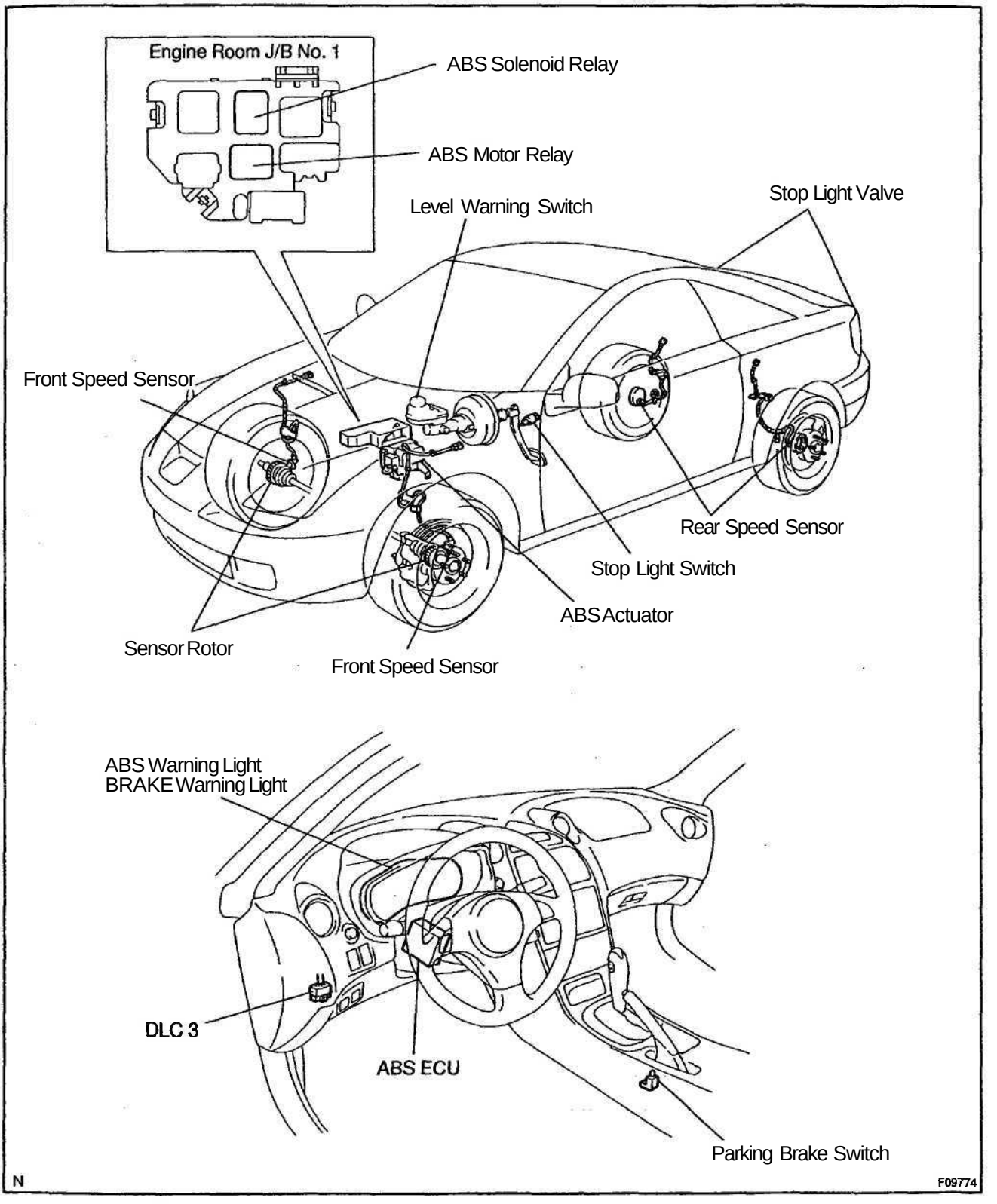

DI6MC-01

TERMINALS OF ECU

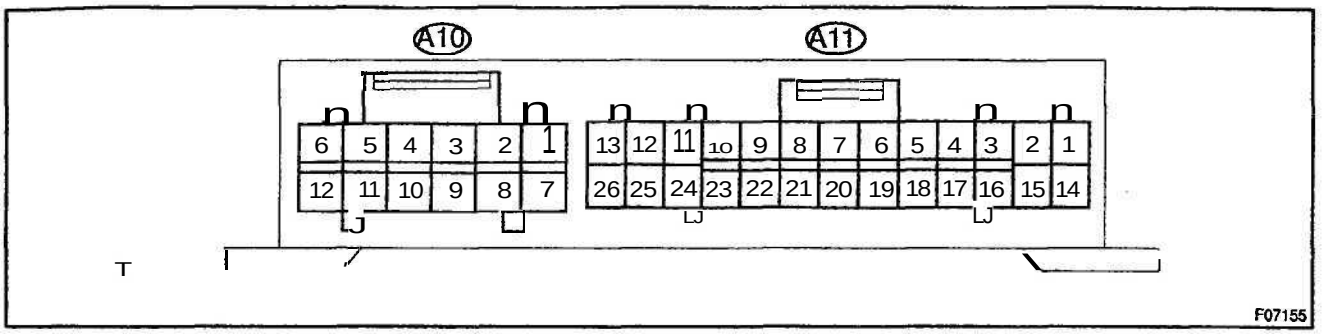

Symbols (Terminals No.)	Wiring Color	Condition	STD Voltage (V)
IG1 (A11 – 13) – GND (A11 - 12, 25)	B–Y ↔ W–B	IG switch ON	10-14
R+(A11-26)-SR(A10-7)	GR–R ↔ GR	IG switch ON, ABS warning light OFF	9-14
R+ (A11 – 26) – MR (A10 – 1)	GR–R ↔ R-Y	IG switch ON	Below 1.0
SFRR (A11 – 1) – GND (A11 – 12, 25)	LG–B ↔ W–B	IG switch ON, ABS warning light OFF	10-14
SFRH (A11 - 2) - GND (A11 - 12, 25)	LG ↔ W–B	IG switch ON, ABS warning light OFF	10-14
SFLR (A10 – 6) – GND (A11 - 12, 25)	R–W ↔ W–B	IG switch ON, ABS warning light OFF	10-14
SFLH (A10 - 5) - GND (A11 – 12, 25)	LG–R ↔ W–B	IG switch ON, ABS warning light OFF	10-14
SRRR (A10 – 12) – GND(A11 – 12, 25)	Y–R ↔ W–B	IG switch ON, ABS warning light OFF	10-14
SRRH{A10-11)-GND(A11 – 12, 25)	Y–G ↔ W–B	IG switch ON, ABS warning light OFF	10-14
SRLR (A11 – 14)- GND (A11 - 12, 25)	B–R ↔ W–B	IG switch ON, ABS warning light OFF	10-14
SRLH (A11 – 15)- GND (A11 - 12, 25)	GR–L ↔ W–B	IG switch ON, ABS warning light OFF	10-14
WA (A11 – 11) – GND (A11 - 12, 25)	V ↔ W–B	IG switch ON, ABS warning light ON	10-14
		IG switch ON, ABS warning light OFF	Below 2.0
STP (A11 - 5) - GND (A11 - 12, 25)	G–W ↔ W–B	Stop light switch OFF	Below 1.5
		Stop light switch ON	8-14
D/G (A11 - 24) - GND (A11– 12, 25)	W ↔ W–B	IG switch ON, ABS warning light OFF	10-14
Tc (A11 – 8) – GND (A11 – 12, 25)	P–B ↔ W–B	IG switch ON	8-14
Ts (A11 – 21)– GND (A11 – 12, 25)	W–R ↔ W–B	IG switch ON	8-14
FR+(A10 - 3) - FR- (A10 - 9)	P ↔ L	IG switch ON, slowly turn right front wheel	AC generation
FL+ (A10 – 8) – FL– (A10 – 2)	Y ↔ BR	IG switch ON, slowly turn left front wheel	AC generation
RR+(A11 - 10) - RR- (A11 - 23)	W ↔ B	IG switch ON, slowly turn right rear wheel	AC generation
RL+(A11 - 22) - RL–(A11 - 9)	R ↔ G	IG switch ON, slowly turn left rear wheel	AC generation

MT (A10 – 10) – GND (A11 - 12, 25)	LG–B ↔ W–B	IG switch ON	Below 1.5
PKB (A11 – 6) – GND (A11 – 21, 25)	R–B ↔ W-B	IG switch ON, parking brake switch ON	Below 2.0
		IG switch ON, parking brake switch OFF	10-14
BRL(A11 – 18) – GND (A11 - 21, 25)	GR ↔ W–B	IG switch ON, BRAKE indicator light ON	10-14
		IG switch ON, BRAKE indicator light OFF	Below 2.0

PROBLEM SYMPTOMS TABLE

If a normal code is displayed during the DTC check but the problem still occurs, check the circuits for each problem symptom in the order given in the table below and proceed to the relevant troubleshooting page.

NOTICE:

When replacing ABS ECU, sensor or etc., turn the IG switch OFF.

Symptom	Suspect Area	See page
ABS does not operate	Only when 1. to 4. are all normal and the problem is still occurring, replace the ABS ECU. 1. Check the DTC reconfirming that the normal code is output. 2. IG power source circuit 3. Speed sensor circuit 4. Check the ABS actuator with a checker or TOYOTA hand–held tester. If abnormal, check the hydraulic circuit for leakage (See page DI–323).	 DI–276 DI–305 DI–285 BR–48
ABS does not operate efficiently	Only when 1. to 4. are all normal and the problem is still occurring, replace the ABS ECU. 1. Check the DTC reconfirming that the normal code is output. 2. Speed sensor circuit 3. Stop light switch circuit 4. Check the ABS actuator with a checker or TOYOTA hand–held tester. If abnormal, check the hydraulic circuit for leakage (See page DI–323).	 DI-276 DI-285 DI–308 BR–48
ABS warning light abnormal	1. ABS warning light circuit 2. ABS ECU	DI–314
BRAKE warning light abnormal	1. BRAKE warning light circuit 2. ABS ECU	DI–317
DTC check cannot be done	Only when 1. and 2. are all normal and the problem is still occurring, replace the ABS ECU. 1. ABS warning light circuit 2. Tc terminal circuit	 DI–314 DI–319
Speed sensor signal check cannot be done	1. Ts terminal circuit 2. ABS ECU	DI–321

D6ME-01

CIRCUIT INSPECTION

DTC	C0200/31 – C1239/39	Speed Sensor Circuit

CIRCUIT DESCRIPTION

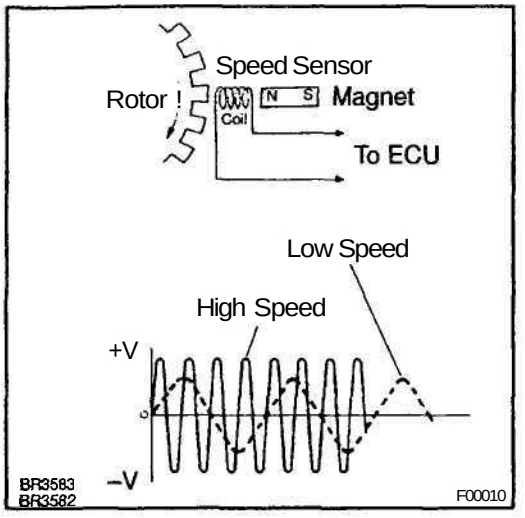

The speed sensor detects wheel speed and sends the appropriate signals to the ECU. These signals are used to control the ABS system. The front and rear rotors each have 48 serrations.

When the rotors rotate, the magnetic field emitted by the permanent magnet in the speed sensor generates an AC voltage. Since the frequency of this AC voltage changes in direct proportion to the speed of the rotor, the frequency is used by the ECU to detect the speed of each wheel.

DTC No.	DTC Detecting Condition	Trouble Area
C0200/31 C0205/32 C0210/33 C0215/34	Detection of any of conditions from 1. through 3.: 1. Vehicle speed is at 10 km/h (6 mph) or more and the speed sensor signal circuit is open or short circuit continues for 15 sec. or more. 2. Momentary interruption of the speed sensor signal occurs 7 times or more. 3. Open circuit condition of the speed sensor signal circuit continues for 0.5 sec. or more.	• Right front, left front, right rear, left rear speed sensor • Each speed sensor circuit • Speed sensor rotor
C1235/35 C1236/36 C1238/38 C1239/39	Vehicle speed is at 20 km/h (12 mph) or more and interference on the speed sensor signal continues for 5 sec. or more.	• Right front, toft front, right rear, teft rear speed sensor • Speed sensor rotor
C0210/33 C0215/34	The condition that the both rear side wheels' speed is lower than the front wheels' speed at 20 km/h (12 mph) or more for 20 sec. or more when the IG switch turns ON and OFF, which is repeated in a sequence more than 8 times.	• Rear axle hub • Right rear, left rear speed sensor • Rear speed sensor circuit

HINT:

- DTC No. C0200/31 and C1235/35 is for the right front speed sensor.
- DTC No. C0205/32 and C1236/36 is for the left front speed sensor.
- DTC No. C0210/33 and C1238/38 is for the right rear speed sensor.

WIRING DIAGRAM

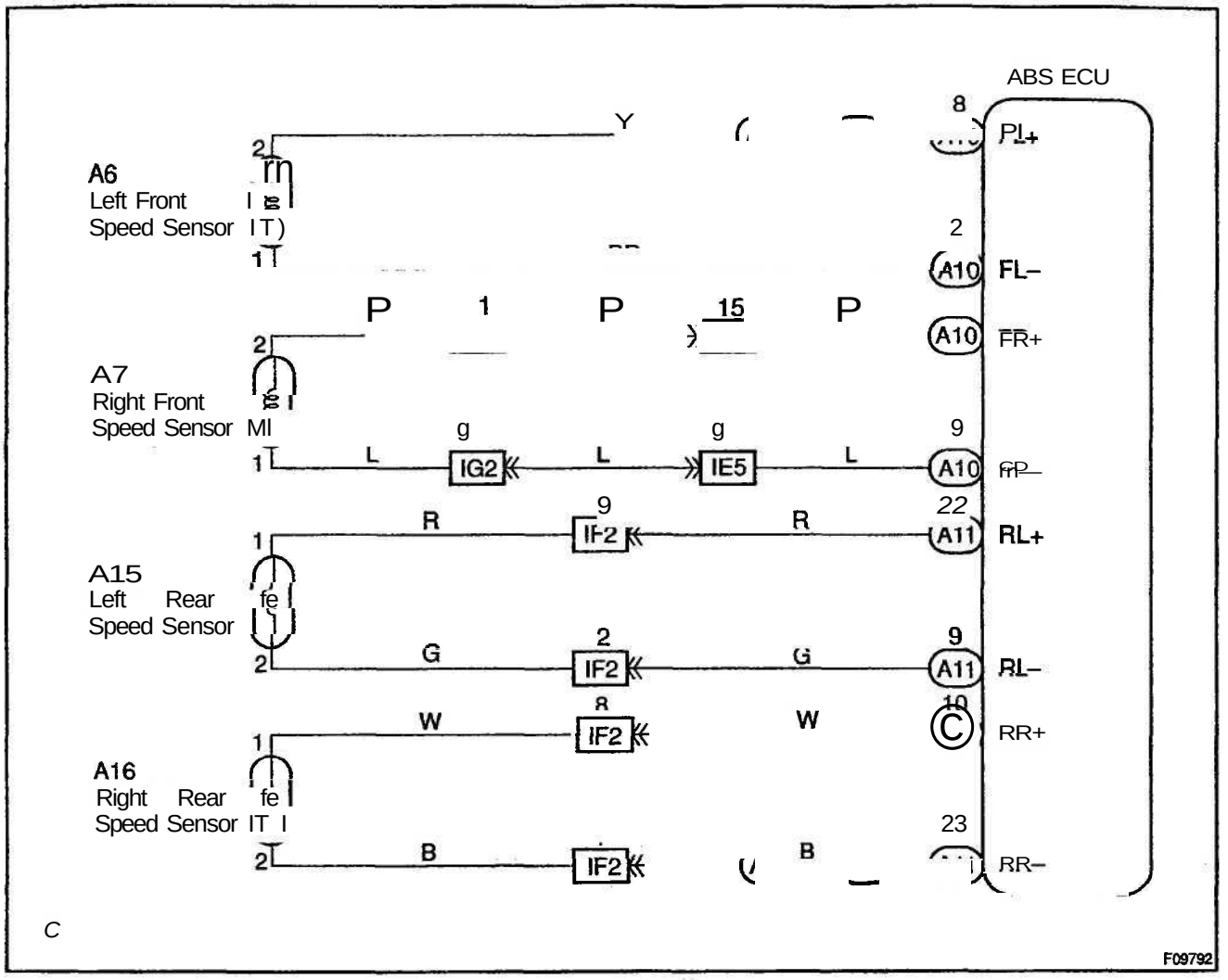

INSPECTION PROCEDURE

HINT:
Start the inspection from step 1 in case of using the TOYOTA hand-held tester and start from step 2 in case of not using the TOYOTA hand-held tester.

1	**Check output value of speed sensor.**

PREPARATION:
(a) Connect the TOYOTA hand-held tester to the DLC3.
(b) Turn the ignition switch ON and push the TOYOTA hand-held tester main switch ON.
(c) Select the DATALIST mode on the TOYOTA hand-held tester.

CHECK:
Check that there is no difference between the speed value output from the speed sensor displayed on the TOYOTA hand-held tester and the speed value displayed on the speedometer when driving the vehicle.

OK:
There is almost no difference from the displayed speed value.

HINT:
There is tolerance of ± 10 % in the speedometer indication.

OK → **Check and replace ABS ECU.**

NG

2	**Check speed sensor.**

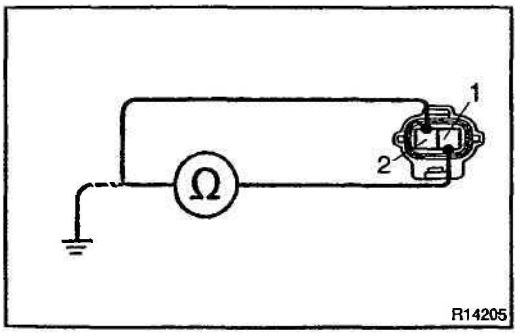

Front:

PREPARATION:
(a) Remove the front fender liner.
(b) Make sure that there is no looseness at the connector lock part and connecting part of the connector.
(c) Disconnect the speed sensor connector.

CHECK:
Measure resistance between terminals 1 and 2 of speed sensor connector.

OK:
Resistance: 1.4 – 1.8 kΩ at 20 °C

CHECK:
Measure resistance between terminals 1 and 2 of speed sensor connector and body ground.

OK:
Resistance: 10 MΩ or higher

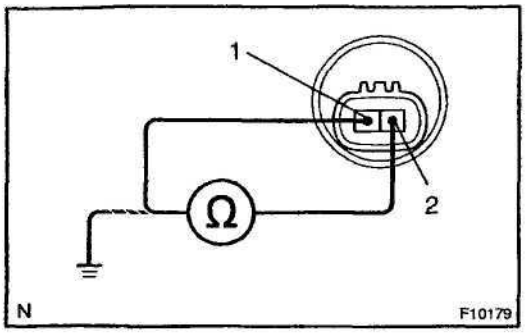

Rear speed sensor:

PREPARATION:

(a) Make sure that there is no looseness at the connector lock part and connecting part of the connector.

(b) Disconnect the speed sensor connector at hub bearing .

CHECK:

Measure resistance between terminals 1 and 2 of speed sensor connector.

OK:

Resistance: 0.9 – 1.3 kΩ at 25 ± 5 °C

CHECK:

Measure resistance between terminals 1 and 2 of speed sensor connector and body ground.

OK:

Resistance: 1 MΩ or higher

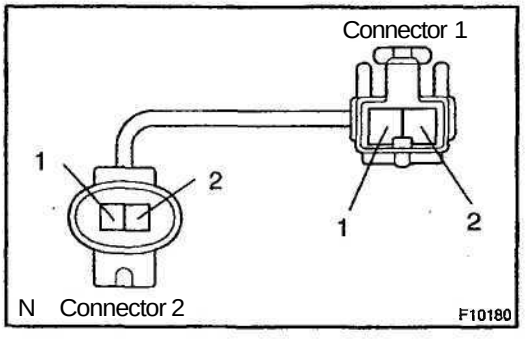

Rear speed sensor sub–wire harness:

PREPARATION:

(a) Remove the seat cushion and seatback.

(b) Make sure that there is no looseness at the connector lock part and connecting part of the connector.

(c) Disconnect the speed sensor connector inside vehicle.

CHECK:

(a) Measure resistance between terminal 1 of connector 1 and terninal 2 of connector 2.

(b) Measure resistance between terminal 2 of connector 1 and terninal 1 of connector 2.

OK:

Resistance: below 1 Ω

CHECK:

Measure resistance between terminals 1 and 2 of speed sensor connector 1 and body ground.

OK:

Resistance: 10 MΩ or higher

NG	Replace speed sensor or sub–wire harness.

NOTICE:

Check the speed sensor signal last (See page DI–276).

OK

3	**Check for open and short circuit in harness and connector between each speed sensor and ABS ECU (See page IN-30).**

NG → **Repair or replace harness or connector.**

OK

4	**Check speed sensor installation.**

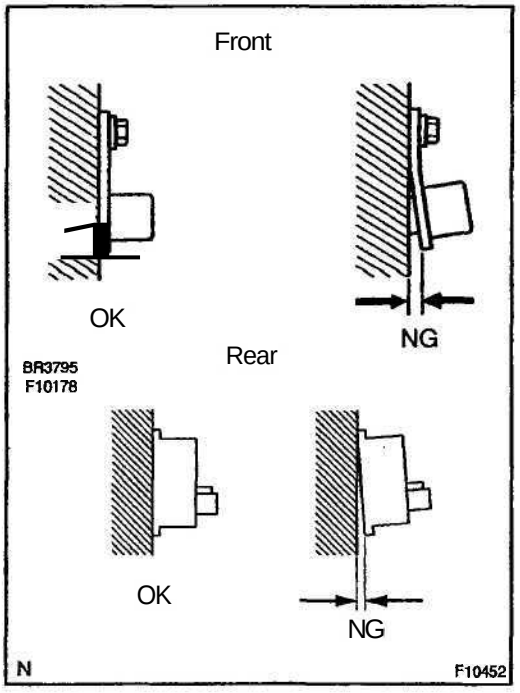

CHECK:

Check the speed sensor installation.

OK:

The installation bolt is tightened properly and there is no clearance between the sensor and steering knuckle or rear axle carrier.

NG → **Replace speed sensor.**

NOTICE:

Check the speed sensor signal last (See page DI-276).

OK

5	Check speed sensor and sensor rotor serrations.

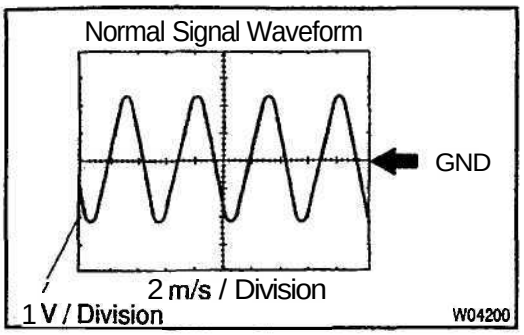

REFERENCE: INSPECTION USING OSCILLOSCOPE

PREPARATION:

(a) Remove the ABS ECU with connectors still connected.
(b) Connect the oscilloscope to the terminals FR+, FL+, RR+ or RL+ and GND of the ABS ECU.

CHECK:

Drive the vehicle with about 30 km/h (19 mph), and check the signal waveform.

OK	Check and replace ABS ECU.

NG

6	Check sensor rotor and sensor tip.

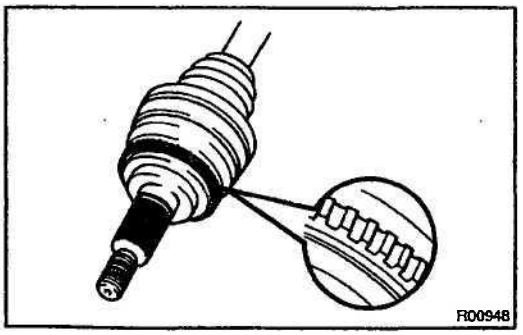

Front:

PREPARATION:

Remove the front drive shaft (See page SA–20).

CHECK:

Check the sensor rotor serrations.

OK:

No scratches or missing teeth or foreign objects.

PREPARATION:

Remove the front speed sensor (See page BR-56).

CHECK:

Check the sensor tip.

OK:

No scratches or foreign objects on the sensor tip.

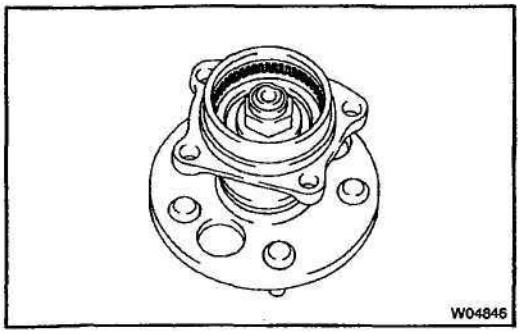

Rear:

PREPARATION:

Remove the rear speed sensor (See page BR-59).

CHECK:

Check the sensor rotor serrations.

OK:

No scratches or missing teeth or foreign objects.

CHECK:

Check the sensor tip.

OK:

No scratches or foreign objects on the sensor tip.

NG → **Replace sensor rotor or speed sensor.**

NOTICE:

Check the speed sensor signal last (See page DI-276).

OK

Check and replace ABS ECU.

DI6MG-01

DTC	C0226/21 - C0256/24	ABS Actuator Solenoid Circuit

CIRCUIT DESCRIPTION

This solenoid goes on when signals are received from the ECU and controls the pressure acting on the wheel cylinders thus controlling the braking force.

DTC No.	DTC Detecting Condition	Trouble Area
C0226/21	Condition 1. or 2. continues for 0.05 sec. or more: 1. IG1 terminal voltage of ABS ECU is 9.5 – 18.5 V, there is open or short circuit in actuator solenoid SFRR or SFRH. 2. IG1 terminal voltage of ABS ECU is 9.5 – 18.5 V, and while ABS is control in operation.*1	• ABS actuator • SFRR or SFRH circuit
C0236/22	Condition 1. or 2. continues for 0.05 sec. or more: 1. IG1 terminal voltage of ABS ECU is 9.5 – 18.5 V, there is open or short circuit in actuator solenoid SFLR or SFLH. 2. IG1 terminal voltage of ABS ECU is 9.5 – 18.5 V, and while ABS is control in operation.*1	• ABS actuator • SFLR or SFLH circuit
C0246/23	Condition 1. or 2. continues for 0.05 sec. or more: 1. IG1 terminal voltage of ABS ECU is 9.5 – 18.5 V, there is open or short circuit in actuator solenoid SRRR or SRRH. 2. IG1 terminal voltage of ABS ECU is 9.5 – 18.5 V, and while ABS is control in operation.*1	• ABS actuator • SRRR or SRRH circuit
C0256/24	Condition 1. or 2. continues for 0.05 sec. or more: 1. IG1 terminal voltage of ABS ECU is 9.5 – 18.5 V, there is open or short circuit in actuator solenoid SRLR or SRLH. 2. IG1 terminal voltage of ABS ECU is 9.5 – 18.5 V, and while ABS is control in operation.*1	• ABS actuator • SRLR or SRLH circuit

*1 Solenoid relay contact ON condition:
All of solenoid terminal voltage is half of IG1 terminal voltage or less than.

WIRING DIAGRAM

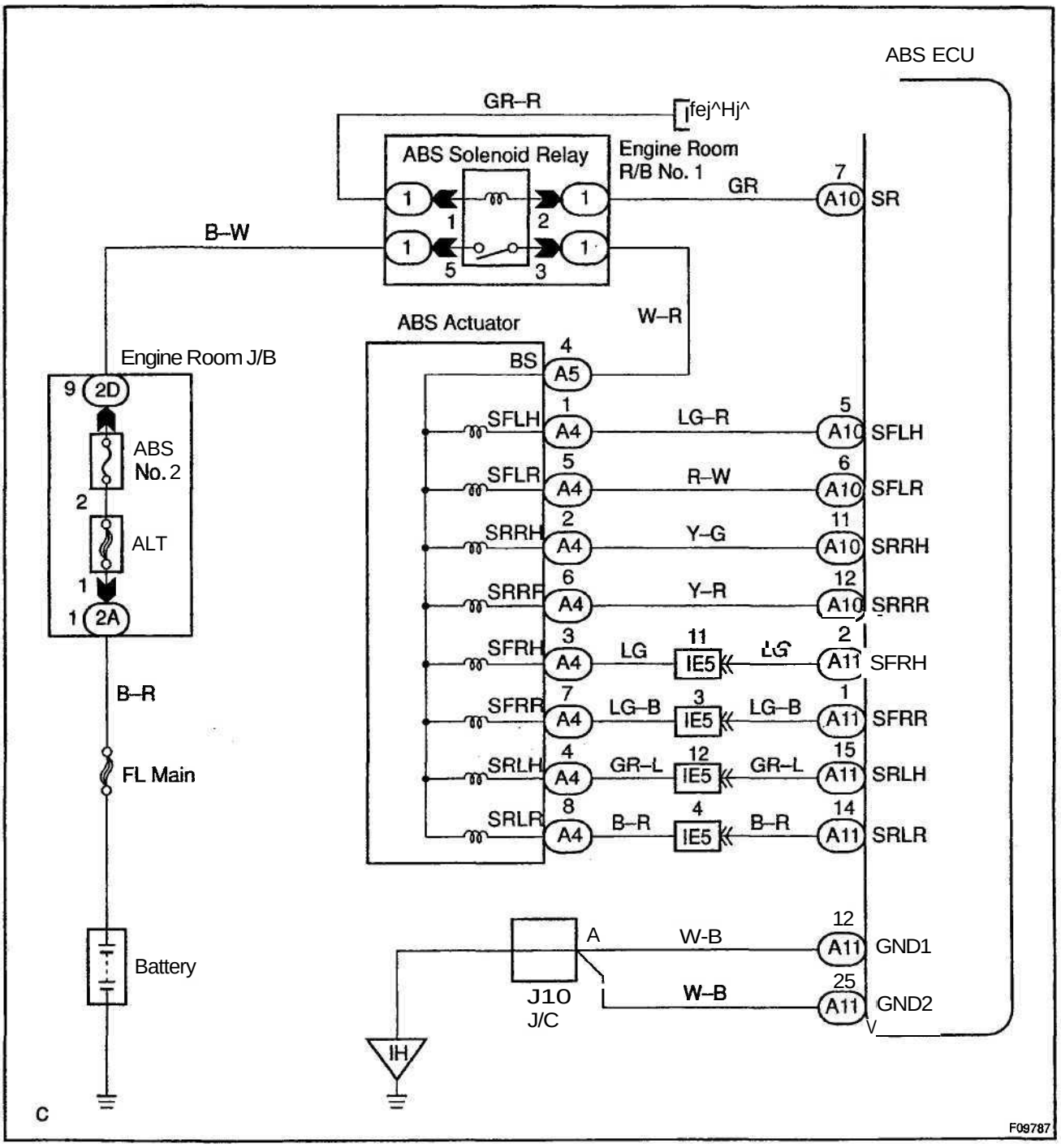

INSPECTION PROCEDURE

1	Check ABS actuator solenoid.

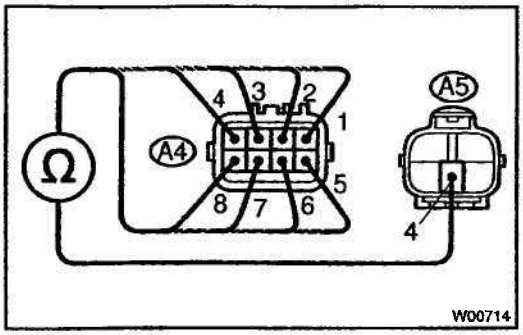

PREPARATION:

Disconnect the 2 connectors from ABS actuator.

CHECK:

Check continuity between terminals A5 - 4 and A4 – 1, 2, 3, 4, 5, 6, 7, 8 of ABS actuator connector.

OK:

Continuity

HINT:

Resistance of S##H solenoid coil is approx. 8 Ω.

Resistance of S##R solenoid coil is approx. 4 Ω.

NG → **Replace ABS actuator.**

OK

2	Check for open and short circuit in harness and connector between ABS ECU and actuator (See page IN–30).

NG → **Repair or replace harness or connector.**

OK

If the same code is still output after the DTC is deleted, check the contact condition of each connection. If the connections are normal, the ECU may be defective.

D06MH-01

DTC	C0273/13, C0274/14	ABS Motor Relay Circuit

CIRCUIT DESCRIPTION

The ABS motor relay supplies power to the ABS pump motor. While the ABS is activated, the ECU switches the ABS motor relay ON and operates the ABS pump motor.

DTC No.	DTC Detecting Condition	Trouble Area
C0273/13	Condition 1. or 2. continues for 0.2 sea or more: 1. ABS ECU terminal IG1 voltage is 9.5 V to 18.5 V, and when motor relay is ON in the midst of initial check or in operation of ABS control.*1 2. Motor relay is ON driving in the midst of initial check or in operation of ABS control, ABS ECU terminal IG1 voltage becomes 9.5 V or less.*2	• ABS motor relay • ABS motor relay circuit
C0274/14	Condition below continues for 4 sec. or more: When the motor relay is OFF, there is open circuit in MT terminal of ABS ECU.	

*1 Relay contact OFF condition: MT terminal voltage is below 3.6 V.

*2 Relay contact ON condition: MT terminal voltage is 3.6 V or above.

WIRING DIAGRAM

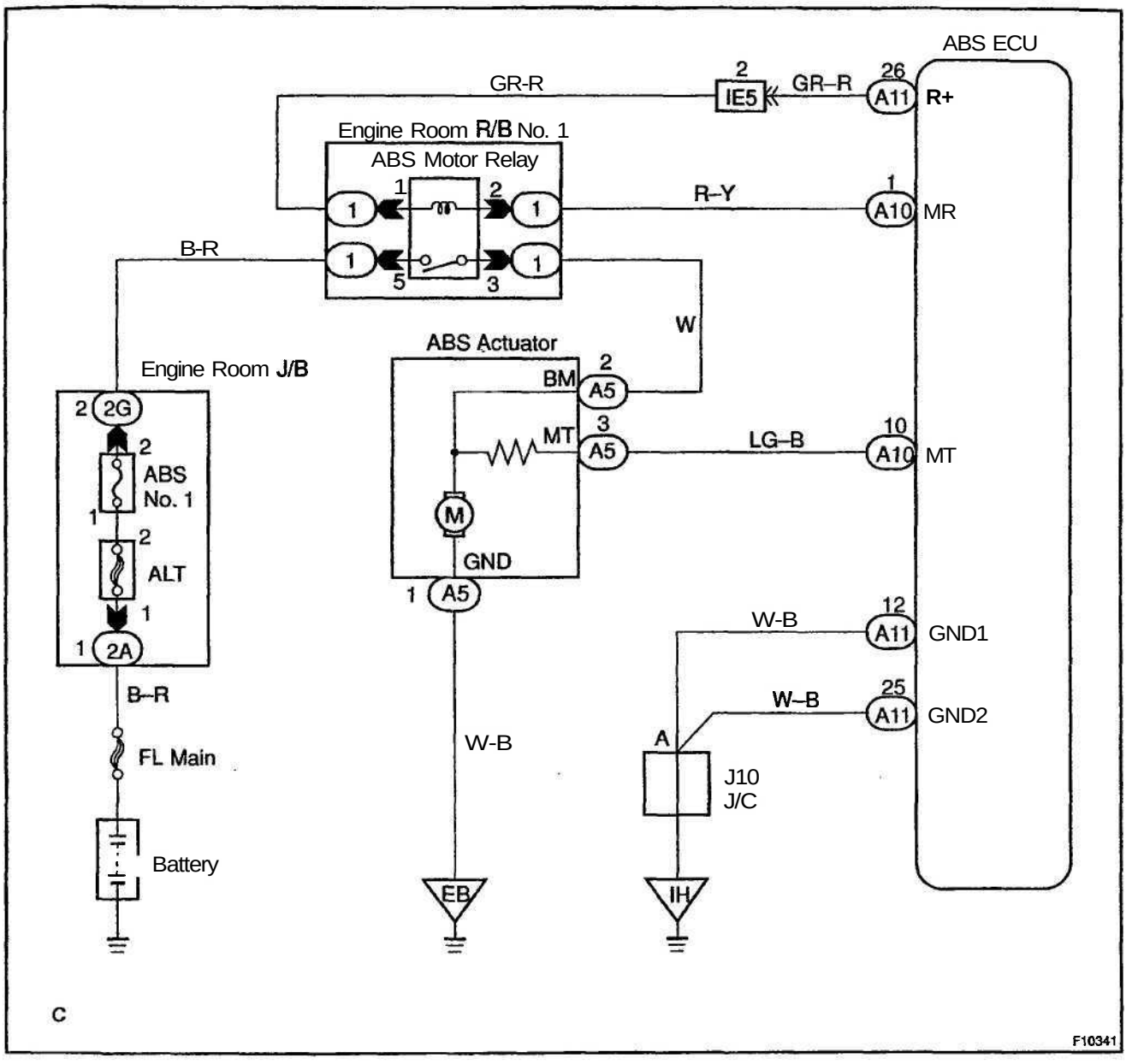

INSPECTION PROCEDURE

HINT:

Start the inspection from step 1 in case of using the TOYOTA hand-held tester and start from step 2 in case of not using TOYOTA hand-held tester.

1	**Check ABS motor relay operation.**

PREPARATION:

(a) Connect the TOYOTA hand-held tester to the DLC3.
(b) Turn the ignition switch ON and push the TOYOTA hand-held tester main switch ON.
(c) Select the ACTIVE TEST mode on the TOYOTA hand-held tester.

CHECK:

Check the operation sound of the ABS motor relay when operating it with the TOYOTA hand-held tester.

OK:

The operation sound of the ABS motor relay should be heard.

OK → **Go to step 5.**

NG

2	**Check voltage between terminal 5 of engine room *RIB* No. 1 (for ABS motor relay) and body ground.**

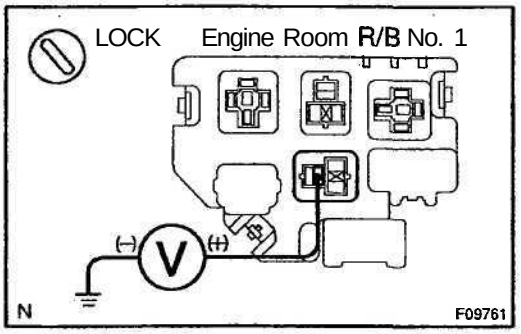

PREPARATION:

Remove the ABS motor relay from engine room R/B No. 1.

CHECK:

Measure voltage between terminal 5 of engine room R/B No. 1 (for ABS motor relay) and body ground.

OK:

Voltage: 10 – 14 V

NG → **Check and repair harness or connector.**

OK

3	Check continuity between terminal 3 of ABS motor relay and terminal MT (A10 – 10) of ABS ECU.

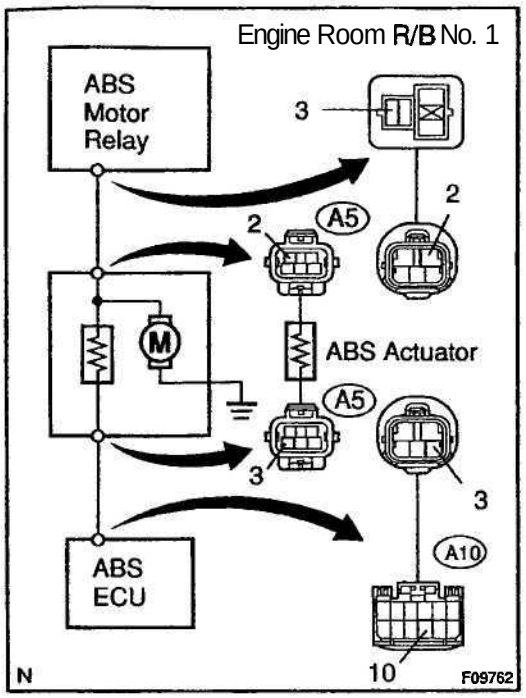

CHECK:

Check continuity between terminal 3 of engine room R/B No.1 (for ABS motor relay) and terminal MT (A10 – 10) of ABS ECU.

OK;

Continuity

HINT:

There is a resistance of 4 - 6 Ω between terminals A5 - 2 and A5 - 3 of ABS actuator.

NG → **Repair or replace harness or ABS actuator.**

OK

4	**Check ABS motor relay.**

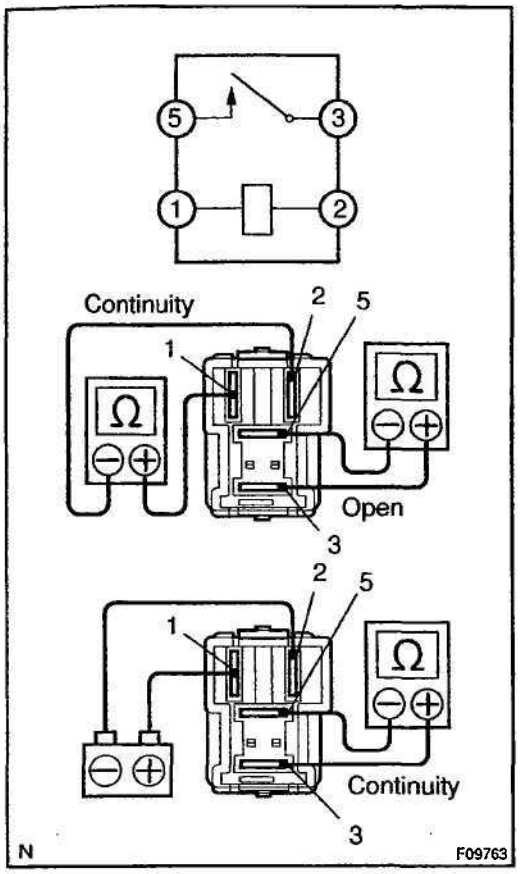

CHECK:

Check continuity between each terminal of ABS motor relay.

OK:

Terminals 1 and 2	Continuity (Reference value 62 Ω)
Terminals 3 and 5	Open

CHECK:

(a) Apply battery positive voltage between terminals 1 and 2.
(b) Check continuity between terminals of ABS motor relay.

OK:

Terminals 3 and 5	Continuity

NG → **Replace ABS motor relay.**

OK ↓

5	**Check for open and short circuit in harness and connector between ABS motor relay and ABS ECU (See page IN-30).**

NG → **Repair or replace harness or connector.**

OK ↓

If the same code is still output after the DTC is deleted, check the contact condition of each connection. If the connections are normal, the ECU may be defective.

D16M1-01

DTC	C0278/11, C0279/12	ABS Solenoid Relay Circuit

CIRCUIT DESCRIPTION

This relay supplies power to each ABS solenoid. After the ignition switch is turned ON, if the initial check is OK, the relay goes on.

DTC No.	DTC Detecting Condition	Trouble Area
C0278/11	Condition 1. or 2. continues for 0.2 sec. or more: 1. IG1 terminal voltage of ABS ECU is 9.5 – 18.5 V, and when the solenoid relay is ON.*1 2. With solenoid relay ON driving, when IG1 terminal of ABS ECU is less than 9.5 V.*1	• ABS solenoid relay • ABS solenoid relay circuit
C0279/12	Immediately after IG switch has been turned ON, when the solenoid relay is OFF.*2	

*1 Solenoid relay contact OFF condition:
All of solenoid terminal voltage is half of IG1 terminal voltage or less than.
*2 Solenoid relay contact ON condition:
All of solenoid terminal voltage is half of IG 1 terminal voltage or more.

WIRING DIAGRAM

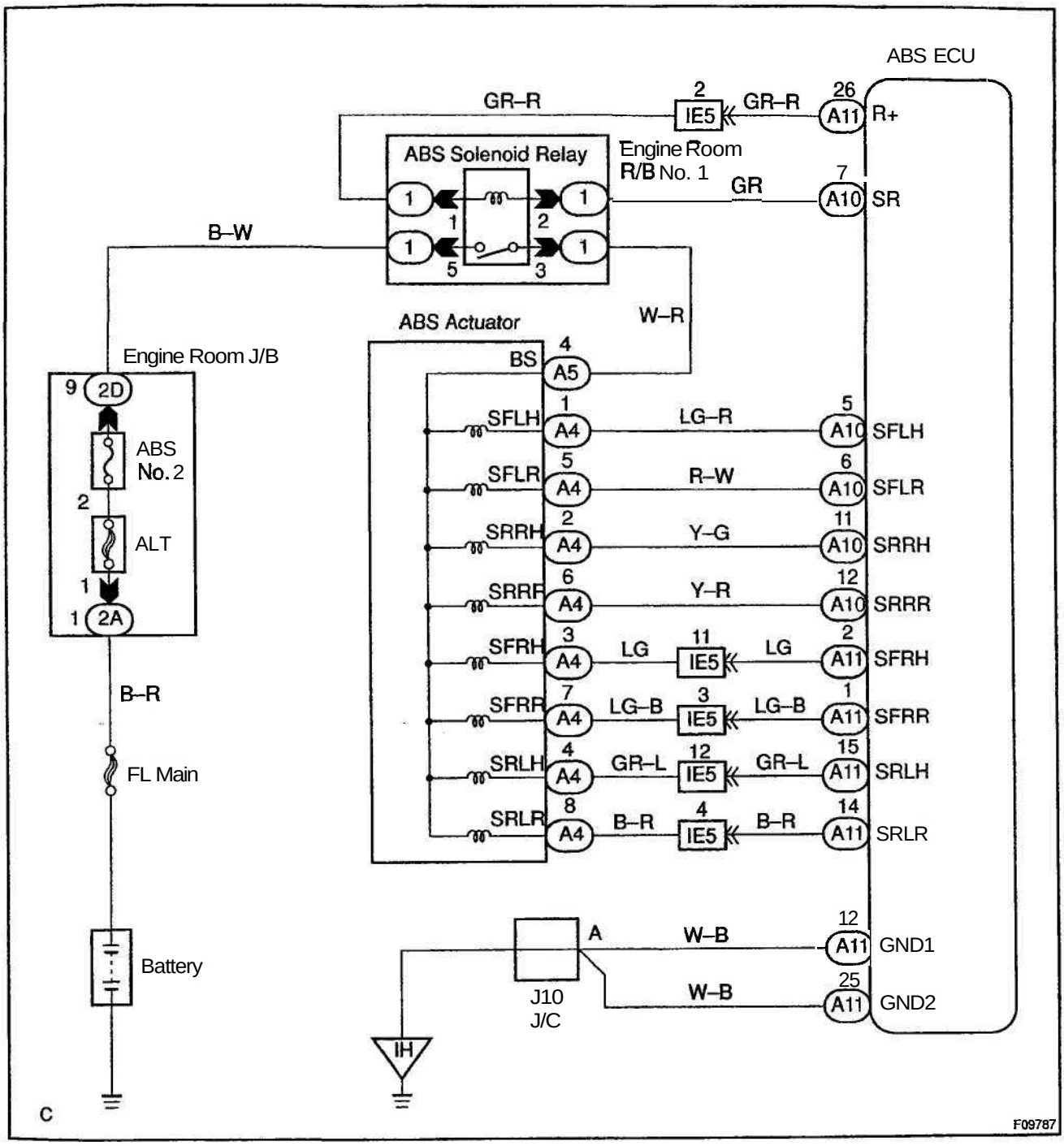

INSPECTION PROCEDURE

HINT:

Start the inspection from step 1 in case of using the TOYOTA hand–held tester and start from step 2 in case of not using the TOYOTA hand–held tester.

1	**Check ABS solenoid relay operation.**

PREPARATION:

(a) Connect the TOYOTA hand–held tester to the DLC3.

(b) Turn the ignition switch ON and push the TOYOTA hand–held tester main switch ON.

(c) Select the ACTIVE TEST mode on the TOYOTA hand–held tester.

CHECK:

Check the operation sound of the ABS solenoid relay when operating it with the TOYOTA hand–held tester.

OK:

The operation sound of the ABS solenoid relay should be heard.

OK → **Go to step 5.**

NG

2	**Check voltage between terminal 5 of engine room R/B No. 1 (for ABS solenoid relay) and body groud.**

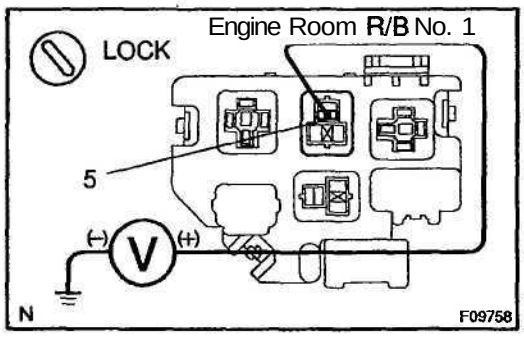

PREPARATION:

Remove the ABS solenoid relay from engine room R/B No. 1.

CHECK:

Measure the voltage between terminal 5 of engine room R/B No. 1 (for ABS solenoid relay) and body ground.

OK:

Voltage: 10 – 14 V

NG → **Check and repair harness or connector.**

OK

3	**Check continuity between terminal 3 of engine room R/B No. 1 (for ABS solenoid relay) and each solenoid terminal of ABS ECU.**

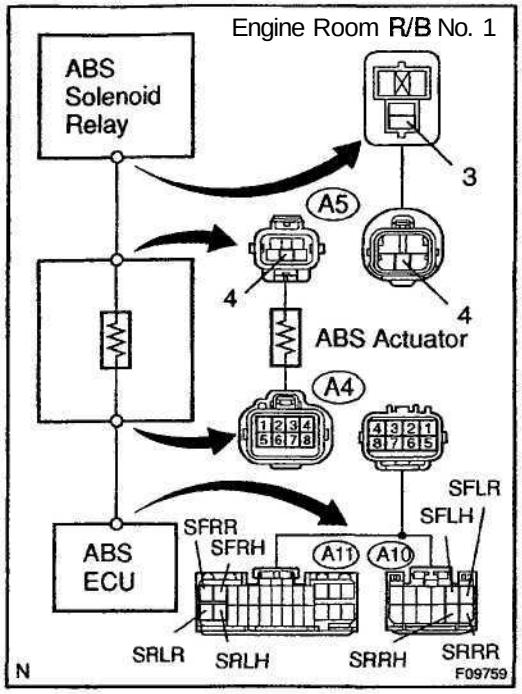

CHECK:

Check continuity between terminal 3 of engine room R/B No. 1 (for ABS solenoid relay) and terminal SRLR, SRLH, SRRR, SRRH, SFLR, SRLH, SFRR or SFRH of ABS ECU.

OK:

Continuity

HINT:

Resistance of each solenoid coil
SRLR, SRRR, SFLR, SFRR: 4.3 Ω
SRLH, SRRH, SFLH, SFRH: 8.8 Ω

NG → **Repair or replace harness or ABS actuator.**

OK

4	Check ABS solenoid relay.

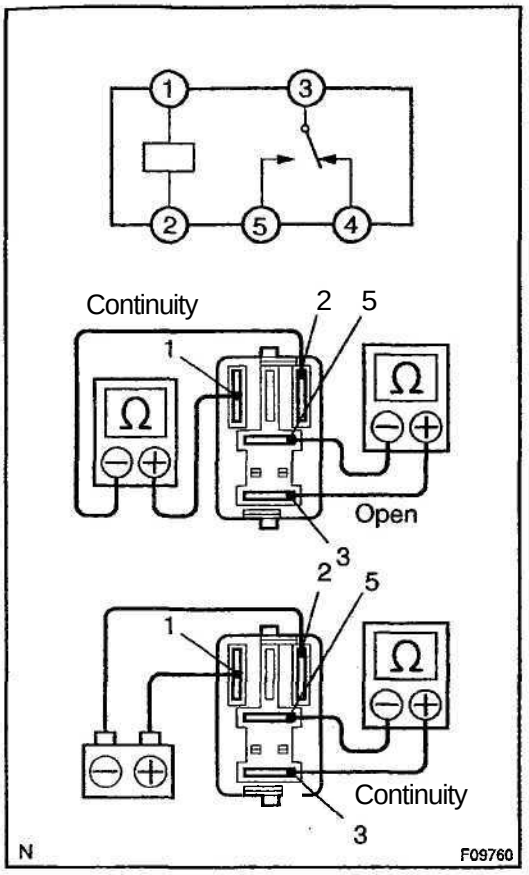

CHECK:

Check continuity between each terminal of ABS solenoid relay.

OK:

Terminals 1 and 2	Continuity (Reference value 100 £1)
Terminals 3 and 5	Open

CHECK:

(a) Apply battery positive voltage between terminals 1 and 2.

(b) Check continuity between each terminal of ABS solenoid relay.

OK:

Terminals 3 and 5	Continuity

NG → **Replace ABS solenoid relay.**

OK ↓

5	Check for open and short circuit in harness and connector between ABS solenoid relay and ABS ECU (See page IN–30).

NG → **Repair or replace harness or connector.**

OK ↓

If the same code is still output after the DTC is deleted, check the contact condition of each connection. If the connections are normal, the ECU may be defective.

DI6MJ-01

DTC	C1241/41	IG Power Source Circuit

CIRCUIT DESCRIPTION

This is the power source for the ECU, hence the actuators.

DTC No.	DTC Detecting Condition	Trouble Area
C1241/41	Condition 1. or 2. is detected: 1. Vehicle speed is at 3 km/h (1.9 mph) or more and ECU terminal IG1 voltage is 9.5 V or less, which continues for 10 sec. or more. 2. When IG1 terminal voltage is less than 9.5 V, there is open circuit in the motor relay or in the solenoid relay, or the solenoid circuit malfunction.	• Battery • Charging system • Power source circuit

WIRING DIAGRAM

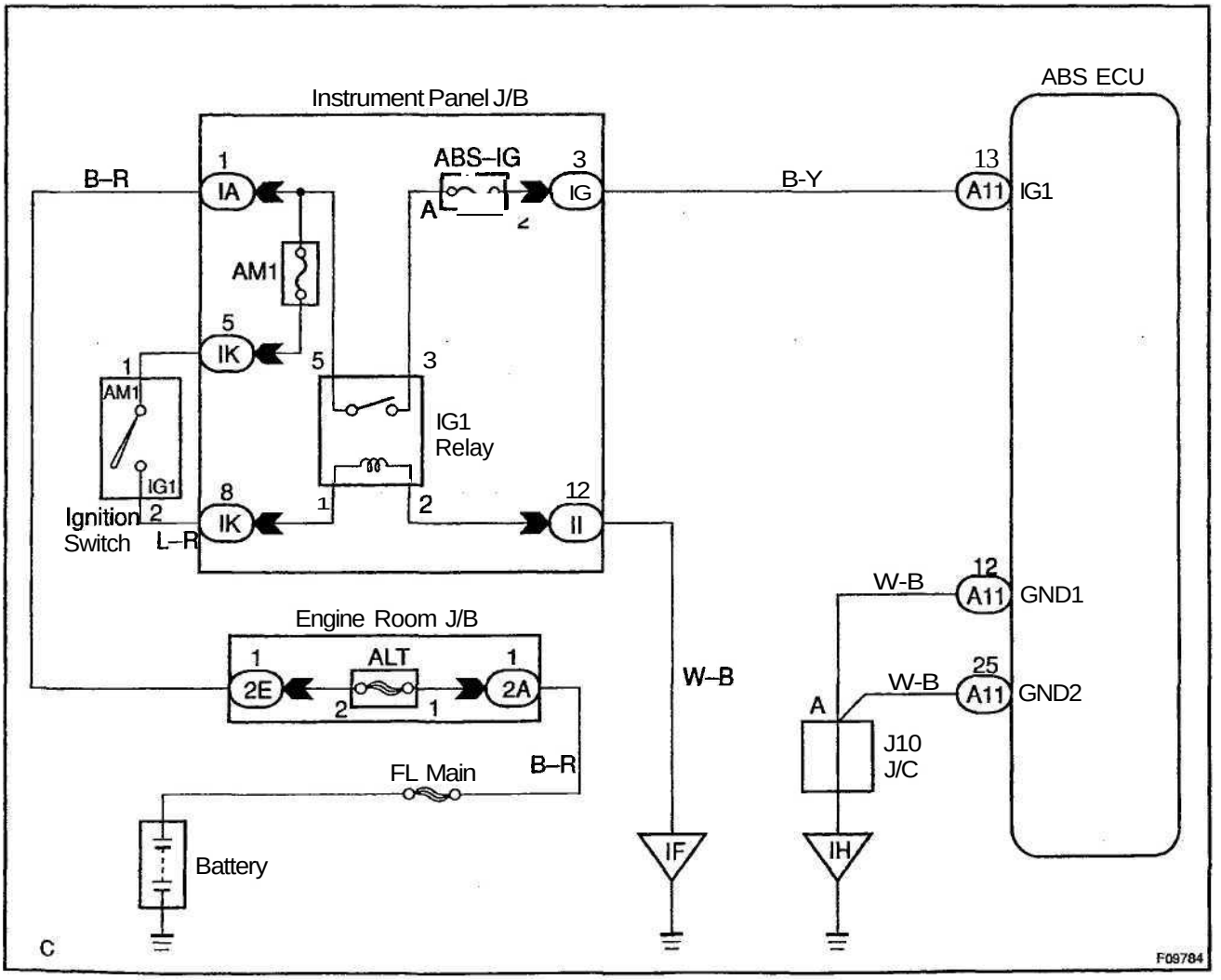

INSPECTION PROCEDURE

1	Check **ECU-IG** fuse.

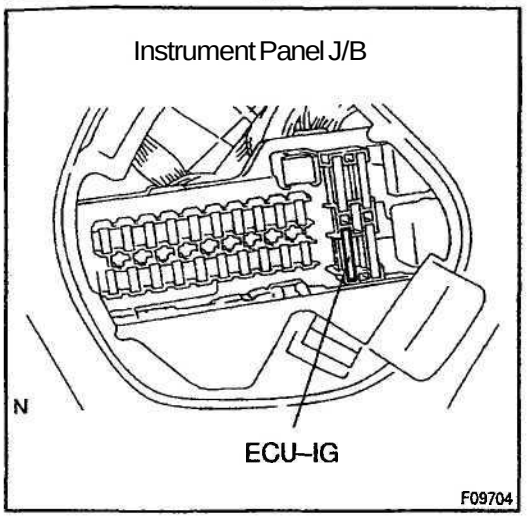

PREPARATION:

Remove ECU-IG fuse from Instrument Panel J/B.

CHECK:

Check continuity of ECU-IG fuse.

OK:

Continuity

NG → Check for short circuit in all **the** harness and components connected to **ECU-IG** fuse (See attached wiring diagram).

OK →

2	Check battery positive voltage.

OK:

Voltage: **10 – 14 V**

NG → Check and repair the charging system. (See page **CH-2**)

OK →

3	Check voltage of the ABS-IG power source.

In case of using TOYOTA hand-held tester:

PREPARATION:

(a) Connect the TOYOTA hand-held tester to the DLC3.

(b) Turn the ignition switch ON and push the TOYOTA hand-held tester main switch ON.

(c) Select the DATALIST mode on the TOYOTA hand-held tester.

CHECK:

Check the voltage condition output from the ECU displayed on the TOYOTA hand-held tester.

OK:

"Normal" is displayed.

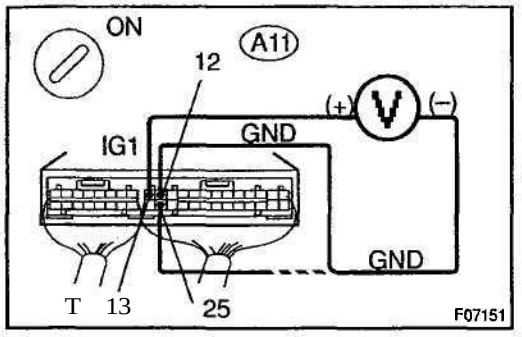

In case of not using TOYOTA hand-held tester:

PREPARATION:

Remove ABS ECU with connectors still connected.

CHECK:

(a) Turn the ignition switch ON.

(b) Measure voltage between terminals A11 - 13 and A11 - 12, 25 of ABS ECU connector.

OK:

Voltage: 10 – 14 V

OK	Check and replace ABS ECU.

NG

4	Check continuity between terminals GND (A11 – 12, 25) of ABS ECU connector and body ground.

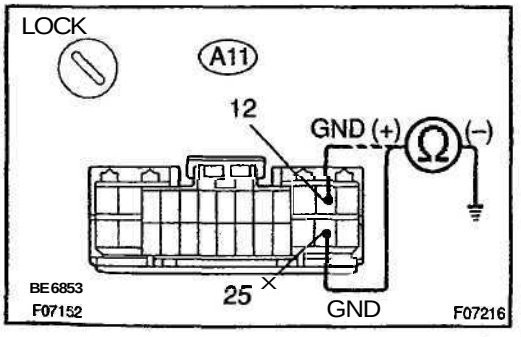

PREPARATION:

Disconnect the connector from the ABS ECU.

CHECK:

Measure resistance between terminal A11 – 12, 25 of ABS ECU harness side connector and body ground.

OK:

Resistance: 1 Ω or less

NG	Repair or replace harness or connector.

OK

Check for open circuit in harness and connector between ABS ECU and ECU-IG fuse (See page IN-30).

DI6MK–01

DTC	C1 249/49	Stop Light Switch Circuit

CIRCUIT DESCRIPTION

DTC No.	DTC Detecting Condition	Trouble Area
C1249/49	ABS ECU terminal IG1 voltage is 9.5 V to 18.5V and ABS is in non–operation, the open circuit of the stop light switch circuit continues for 0.3 sec. or more.	• Stop light switch • Stop light switch circuit

WIRING DIAGRAM

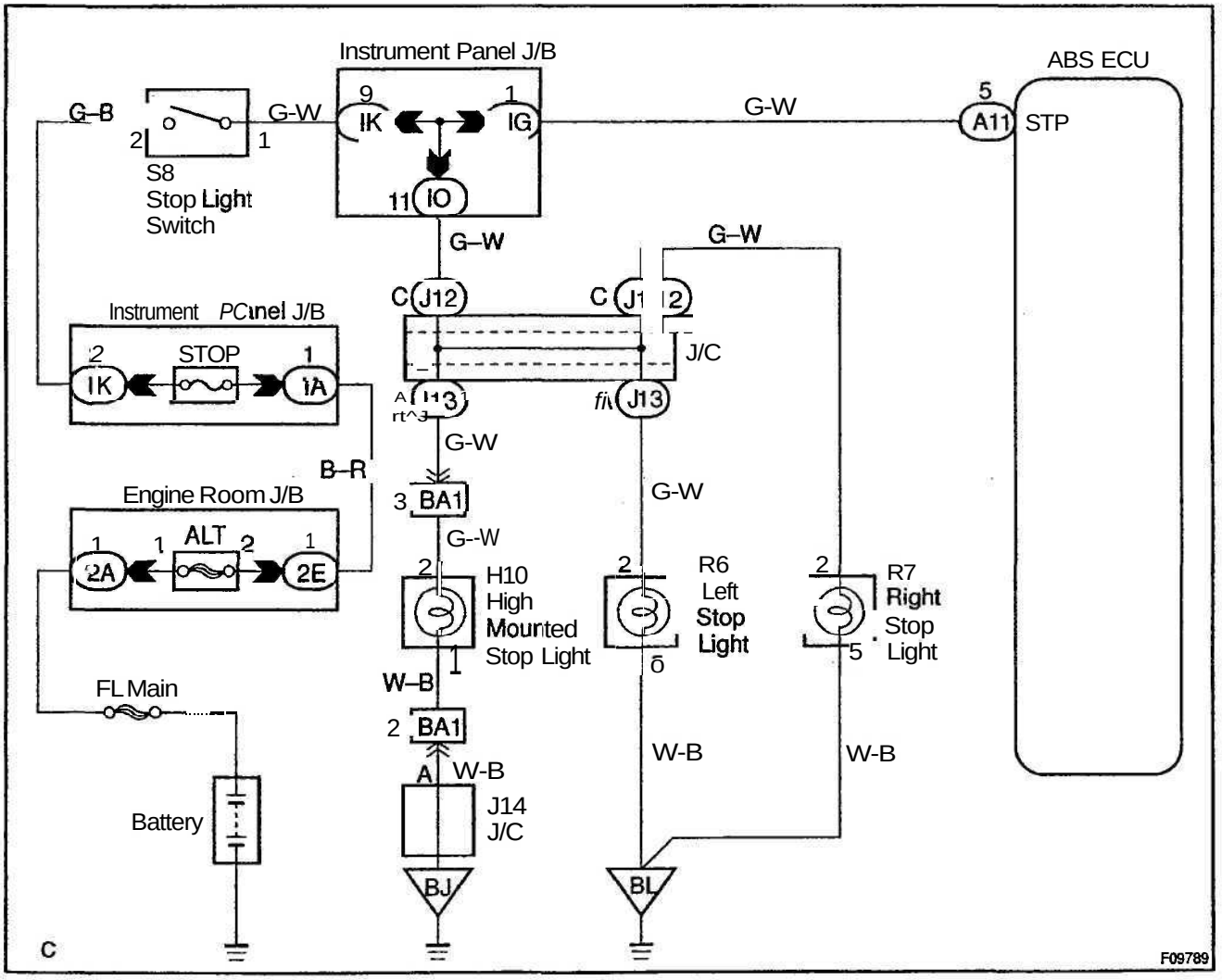

INSPECTION PROCEDURE

1	Check operation of stop light.

CHECK:
Check that stop light lights up when brake pedal is depressed and turns off when brake pedal is released.

NG → **Repair stop light circuit (See page BE–33).**

OK

2	**Check voltage between terminal STP (A11 - 5) of ABS ECU and body ground.**

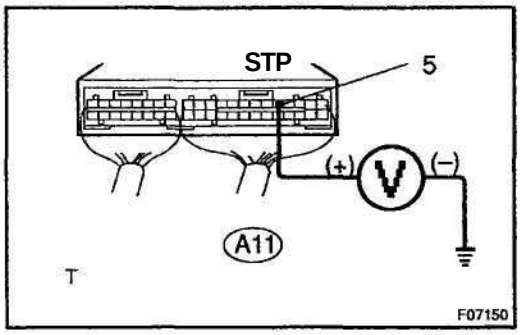

PREPARATION:
Remove ABS ECU with connectors still connected.
CHECK:
Measure voltage between terminal A11 - 5 of ABS ECU and body ground when brake pedal is depressed.
OK:
Voltage: 8 – 14 V

OK → **Check and replace ABS ECU.**

NG

3	**Check for open circuit in harness and connector between ABS ECU and stop light switch (See page IN–30).**

NG → **Repair or replace harness or connector.**

OK

Proceed to next circuit inspection shown on problem symptoms table (See page DI–284).

DI6AL-01

DTC	C1251/51	ABS Pump Motor Lock

CIRCUIT DESCRIPTION

DTC No.	DTC Detecting Condition	Trouble Area
C1251/51	ABS actuator pump motor is not operating normally.	ABS pump motor

WIRING DIAGRAM

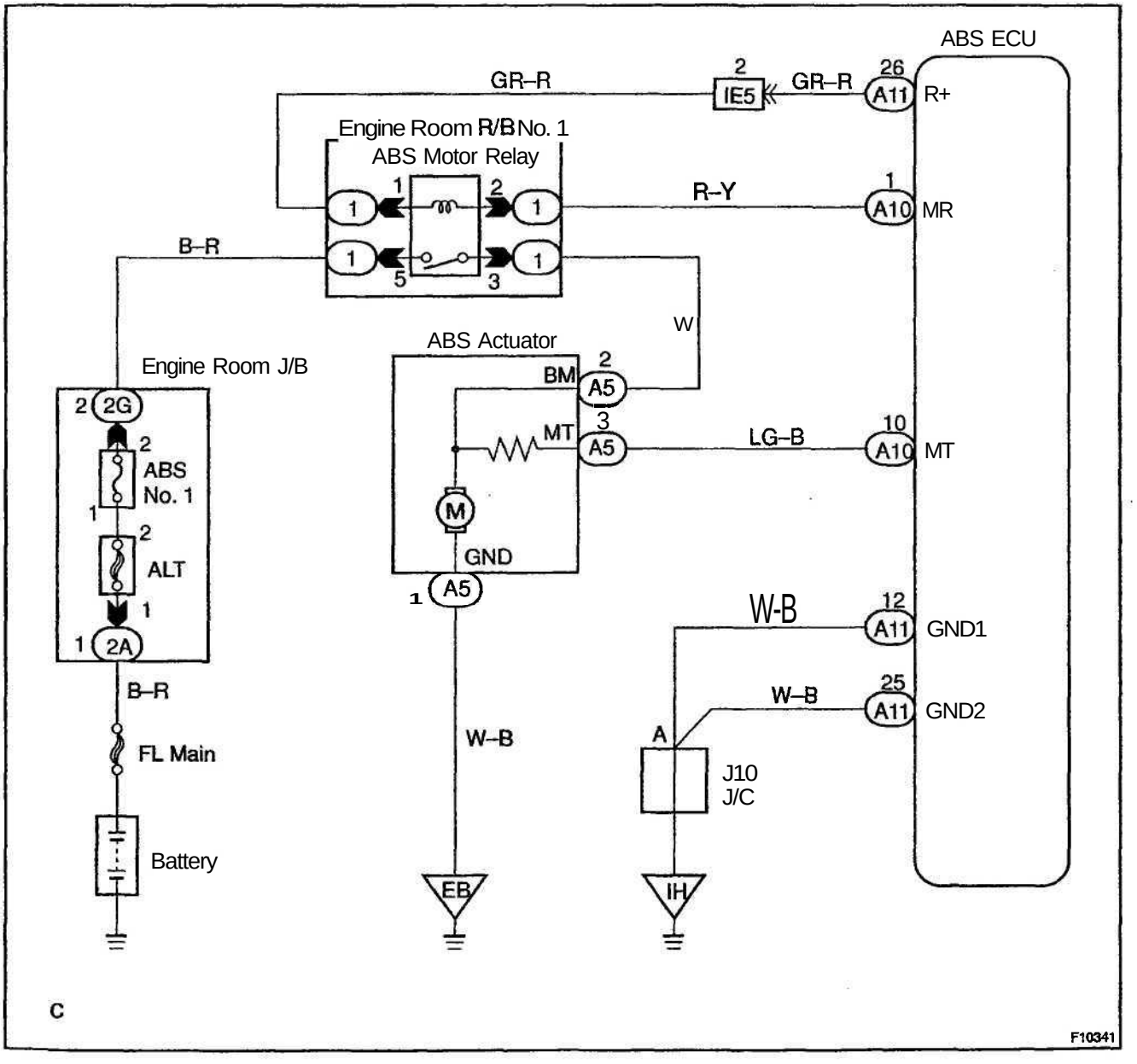

INSPECTION PROCEDURE

1	Check operation of ABS pump motor.

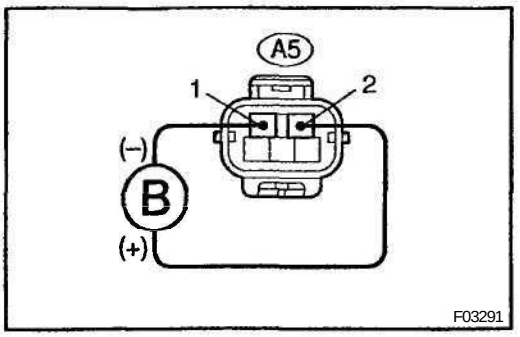

PREPARATION:

Disconnect the ABS actuator connector.

CHECK:

Connect positive ⊕ lead to terminal BM (A5 — 2) and negative ⊖ lead to terminal GND (A5 – 1) of the ABS actuator connector, check that the pump motor is operates.

OK:

The running sound of the pump motor should be heard.

OK	**Check for open circuit in harness and connector between ABS motor relay, ABS actuator and ABS ECU (See page IN-30).**

NG

Replace ABS actuator.

DI6MM-01

DTC	Always ON	ABS ECU Malfunction

CIRCUIT DESCRIPTION

DTC No.	DTC Detecting Condition	Trouble Area
Always ON	ABS ECU internal malfunction is detected.	• Combination meter • Combination meter circuit • Battery • ABS ECU

INSPECTION PROCEDURE

1	**Is DTC output?**

Check DTC on page DI–276.

YES ▶ **Repair circuit indicated by the code output.**

NO ▼

2	Is normal code displayed?

YES ▶ Check and replace ABS ECU.

NO ▼

3	Is ABS warning light go off?

YES ▶ Check and replace ABS ECU.

NO ▼

4	Check battery positive voltage.

CHECK:
Check the battery positive voltage.
OK:
10-14V

NG → Check and repair the charging system. (See page CH-2)

OK

5	Check ABS warning light.

PREPARATION:
(a) Disconnect the connector from the ABS ECU.
(b) Connect the terminal WA (A11 – 11) of wire harness and the terminal GND (A11 – 12, 25) of wire harness.
(c) Turn the ignition switch ON.
CHECK:
Check the ABS warning light goes off.

OK → Check and replace ABS ECU.

NG

Check for short circuit in harness and connector between ABS warning light, combination meter and ABS ECU (See page IN-30).

DI6MN–01

ABS Warning Light Circuit

CIRCUIT DESCRIPTION

If the ECU detects trouble, it lights the ABS warning light while at the same time prohibiting ABS control. At this time, the ECU records a DTC in memory.
Connect terminals Tc and CG of the DLC3 to make the ABS warning light blink and output the DTC.

WIRING DIAGRAM

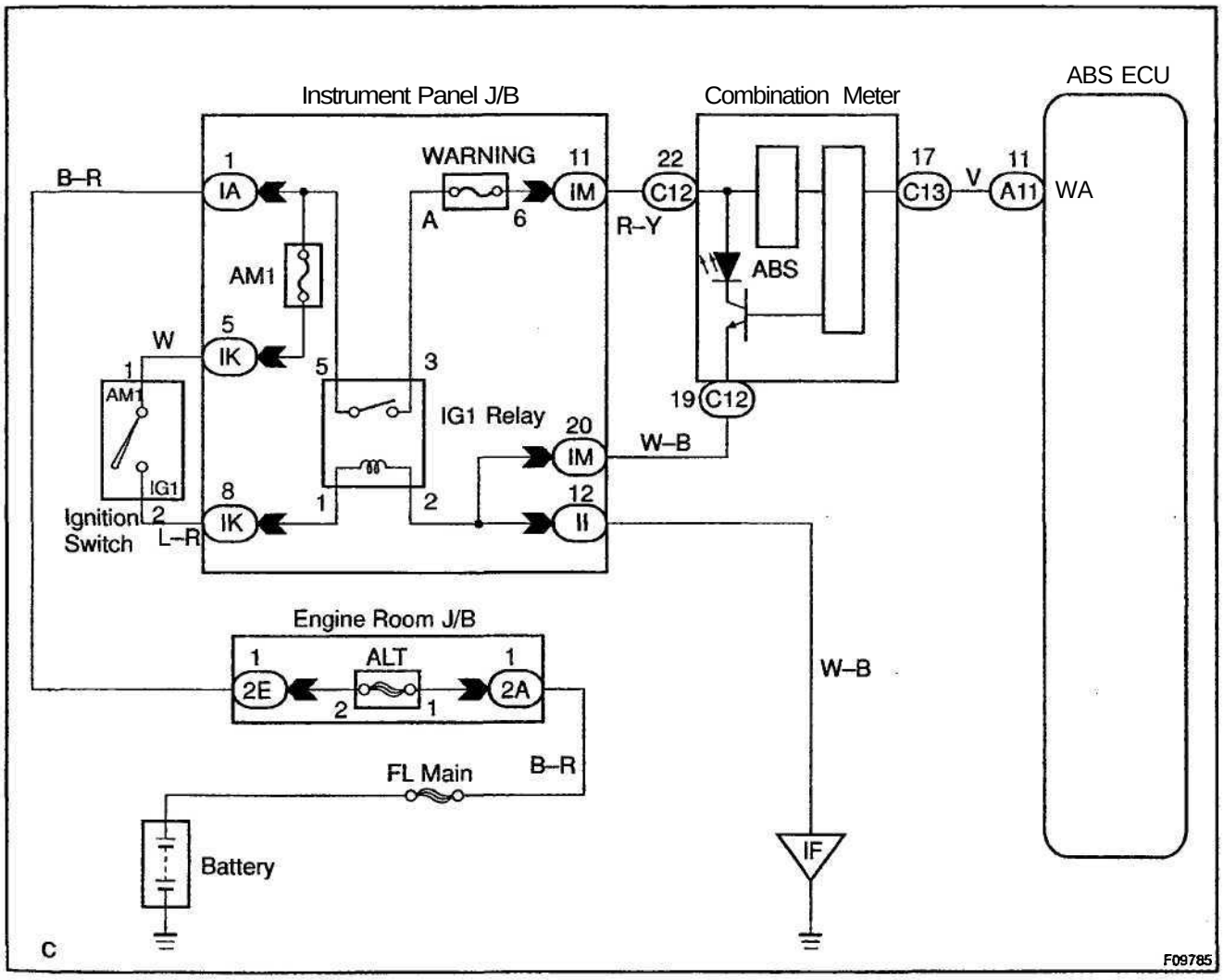

INSPECTION PROCEDURE

HINT:

Troubleshoot in accordance with the chart below for each trouble symptom.

ABS warning light does not light up	*1
ABS warning light remains on	*2

*1: Start the inspection from step 1 in case of using the TOYOTA hand-held tester and start from step 2 in case of not using TOYOTA hand-held tester.

*2: After inspection of step 3, start the inspection from step 4 in case of using the TOYOTA hand-held tester and start from step 5 in case of not using TOYOTA hand-held tester.

1	**Check operation of the ABS warning light.**

PREPARATION:

(a) Connect the TOYOTA hand-held tester to the DLC3.

(b) Turn the ignition switch ON and push the TOYOTA hand-held tester main switch ON.

(c) Select the ACTIVE TEST mode on the TOYOTA hand-held tester.

CHECK:

Check that "ON" of the ABS warning light can be shown on the combination meter using the TOYOTA hand-held tester.

HINT:

ABS warning light turns "OFF" automatically 2 seconds after it is turnd "ON".

OK → **Check and replace ECU.**

NG

2	**Check ABS warning light.**

See combination meter troubleshooting on page BE-2.

NG → **Repair buib or combination meter assembly.**

OK

3	Check that the ECU connectors are securely connected to the ECU.

NO → Connect the connector to the ECU.

YES

Check for open circuit in harness and connector between combination meter and ABS ECU (See page IN–30).

4	Check operation of the ABS warning light (See step 1).

OK → Check and replace ABS ECU.

NG

5	**Is DTC output?**

Check DTC on page DI–276.

YES → **Repair circuit indicated by the output code.**

NO

Check for short circuit in harness and connector between DLC3 and ABS ECU (See page IN–30).

DIEMO-01

BRAKE Warning Light Circuit

CIRCUIT DESCRIPTION

The BRAKE warning light lights up when the brake fluid is insufficient, the parking brake is applied or the EBD is defective.

WIRING DIAGRAM

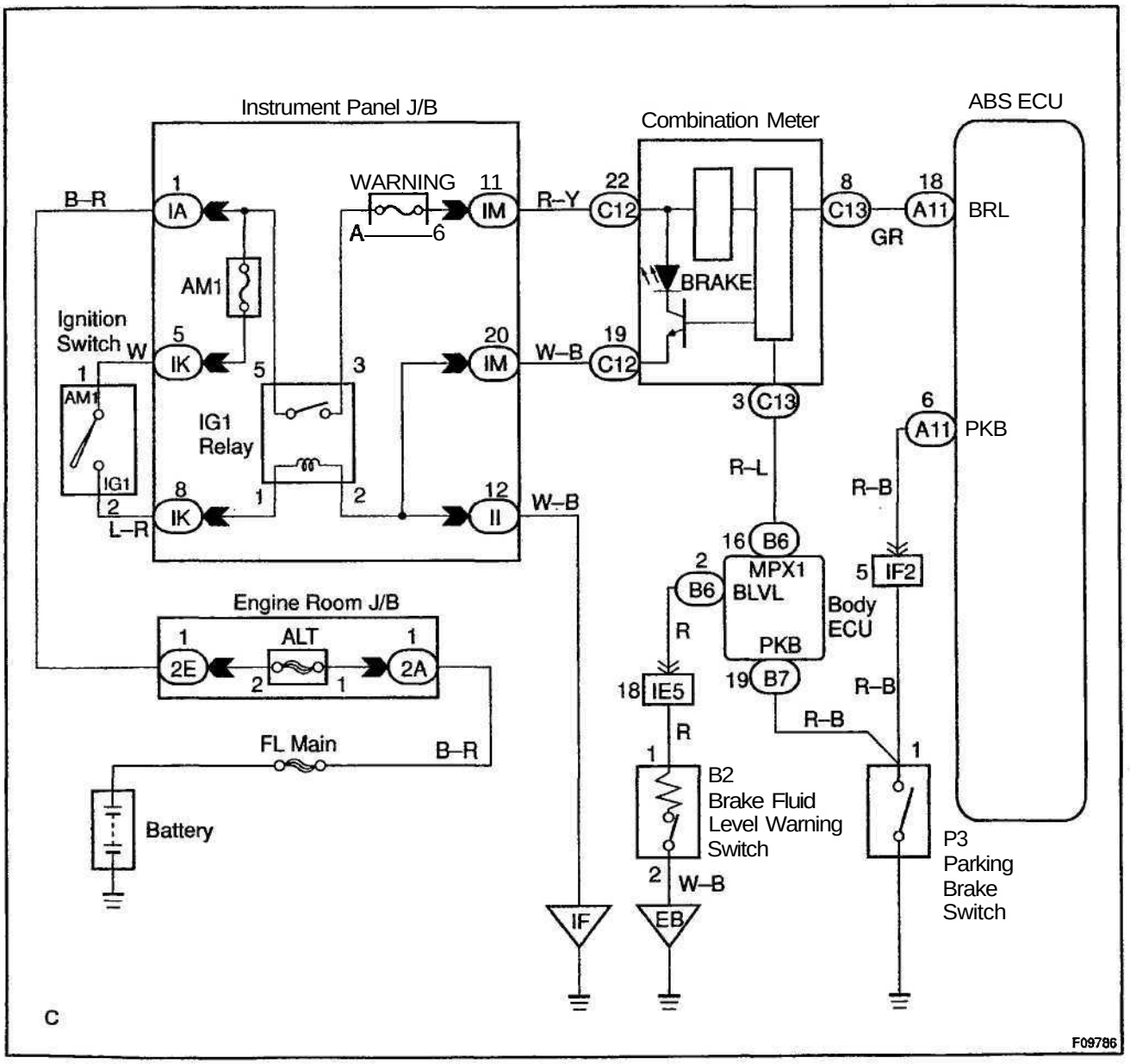

INSPECTION PROCEDURE

1	Check parking brake switch circuit (See page BE-2).

NG → Repair or replace parking brake switch circuit.

OK

2	**Check brake fluid level warning switch circuit (See page BE-2).**

NG → **Repair or replace brake fluid level warning switch circuit.**

OK

3	**Is DTC output for ABS?**

Check DTC on page DI–276.

Yes → **Repair circuit indicated by the output code.**

No

4	**Check BRAKE warning light.**

See combination meter troubleshooting on page BE-2.

NG → **Repair or replace combination meter.**

OK

Check and replace ABS ECU.

DIEMP-01

Tc Terminal Circuit

CIRCUIT DESCRIPTION

Connecting between terminals Tc and CG of the DLC3 causes the ECU to display the DTC by flashing the ABS warning light.

WIRING DIAGRAM

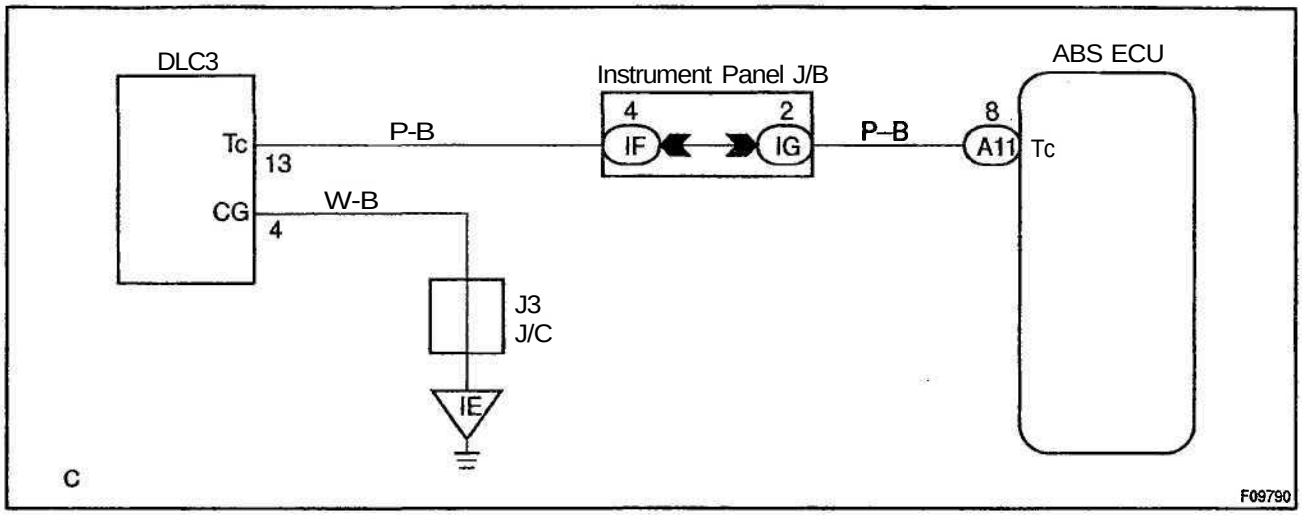

INSPECTION PROCEDURE

1	Check voltage between terminals Tc and CG of DLC3.

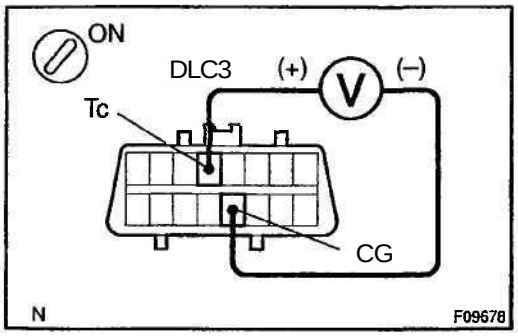

CHECK:

(a) Turn the ignition switch ON.

(b) Measure voltage between terminals Tc and CG of DLC3.

OK:

Voltage: 10 – 14 V

OK	If ABS warning light does not blink even after Tc and CG are connected, the ECU may be defective.

NG

2	Check for open and short circuit in harness and connector between ABS ECU and DLC3, DLC3 and body ground (See page IN–30).

NG → Repair or replace harness or connector.

OK →

Check and replace ABS ECU.

D6MQ-01

Ts Terminal Circuit

CIRCUIT DESCRIPTION

The sensor check circuit detects abnormalities in the speed sensor signal which cannot be detected with the DTC check.
Connecting terminals Ts and CG of the DLC3 starts the check.

WIRING DIAGRAM

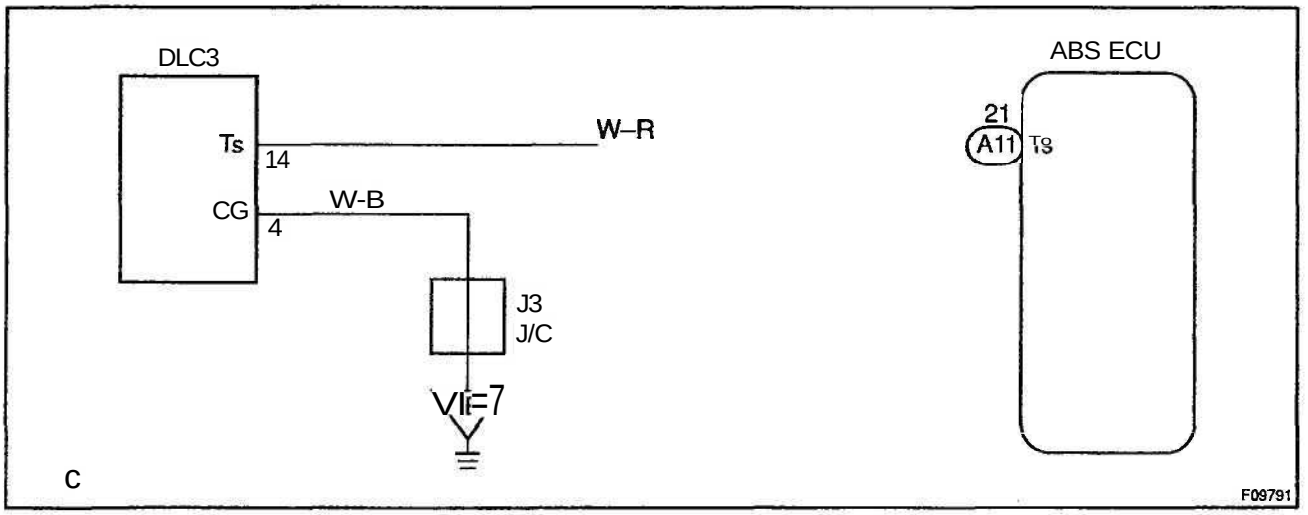

INSPECTION PROCEDURE

1	**Check voltage between terminals Ts and CG of DLC3.**

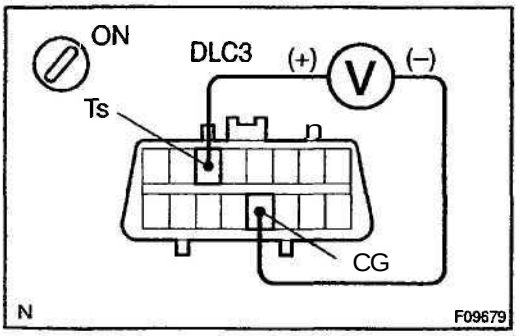

CHECK:

(a) Turn the ignition switch ON.
(b) Measure voltage between terminals Ts and CG of DLC3.

OK:

Voltage: 10 – 14 V

OK → **If ABS warning light does not blink even after Ts and CG are connected, the ECU may be defective.**

NG

2	Check for open and short circuit in harness and connector between ABS ECU and DLC3, DLC3 and body ground (See page IN–30).

NG → Repair or replace harness or connector.

OK

Check and replace ABS ECU.

DI6MR-01

Check for Fluid Leakage

Check for fluid leakage from actuator or hydraulic lines.

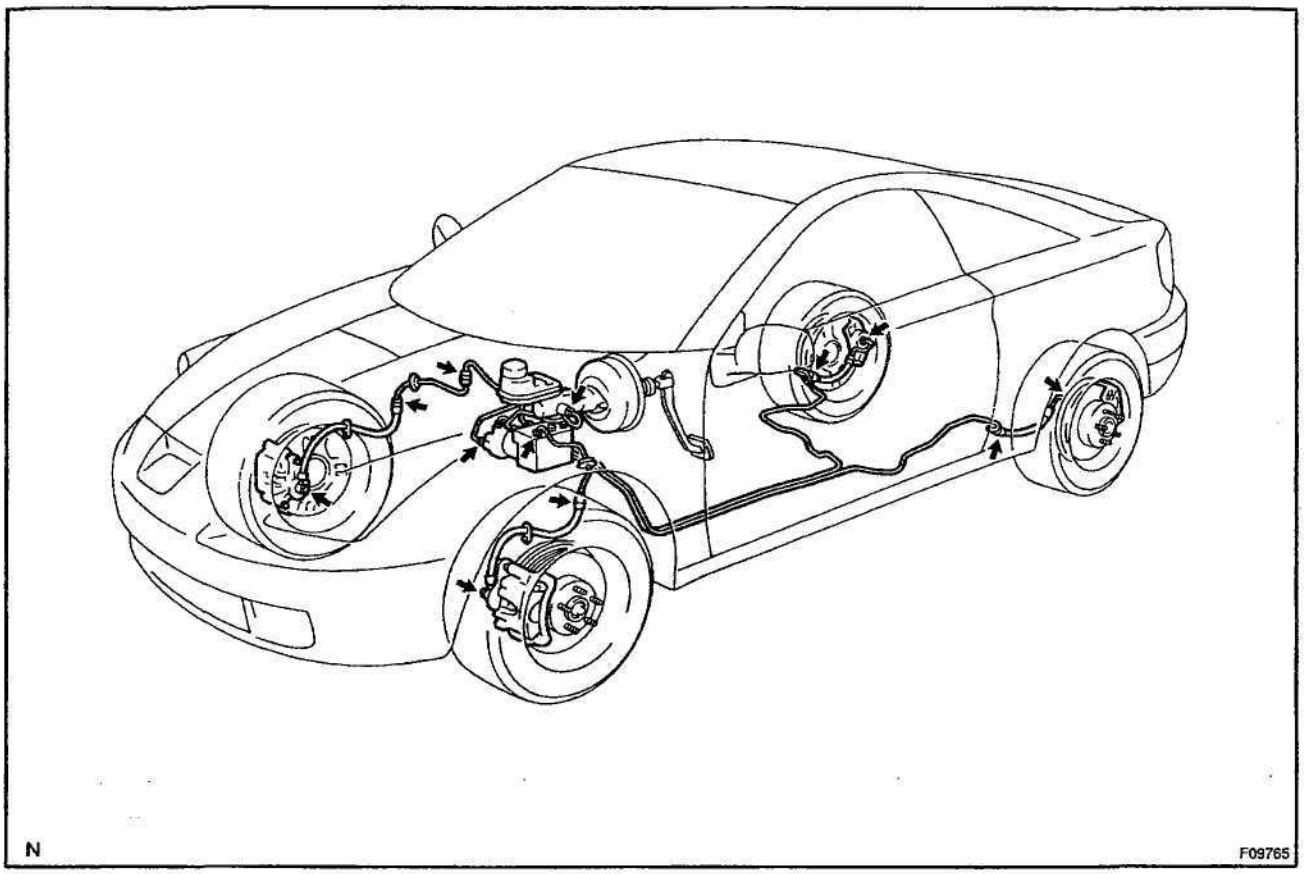

SUPPLEMENTAL RESTRAINT SYSTEM

HOW TO PROCEED WITH TROUBLESHOOTING

D6OW-01

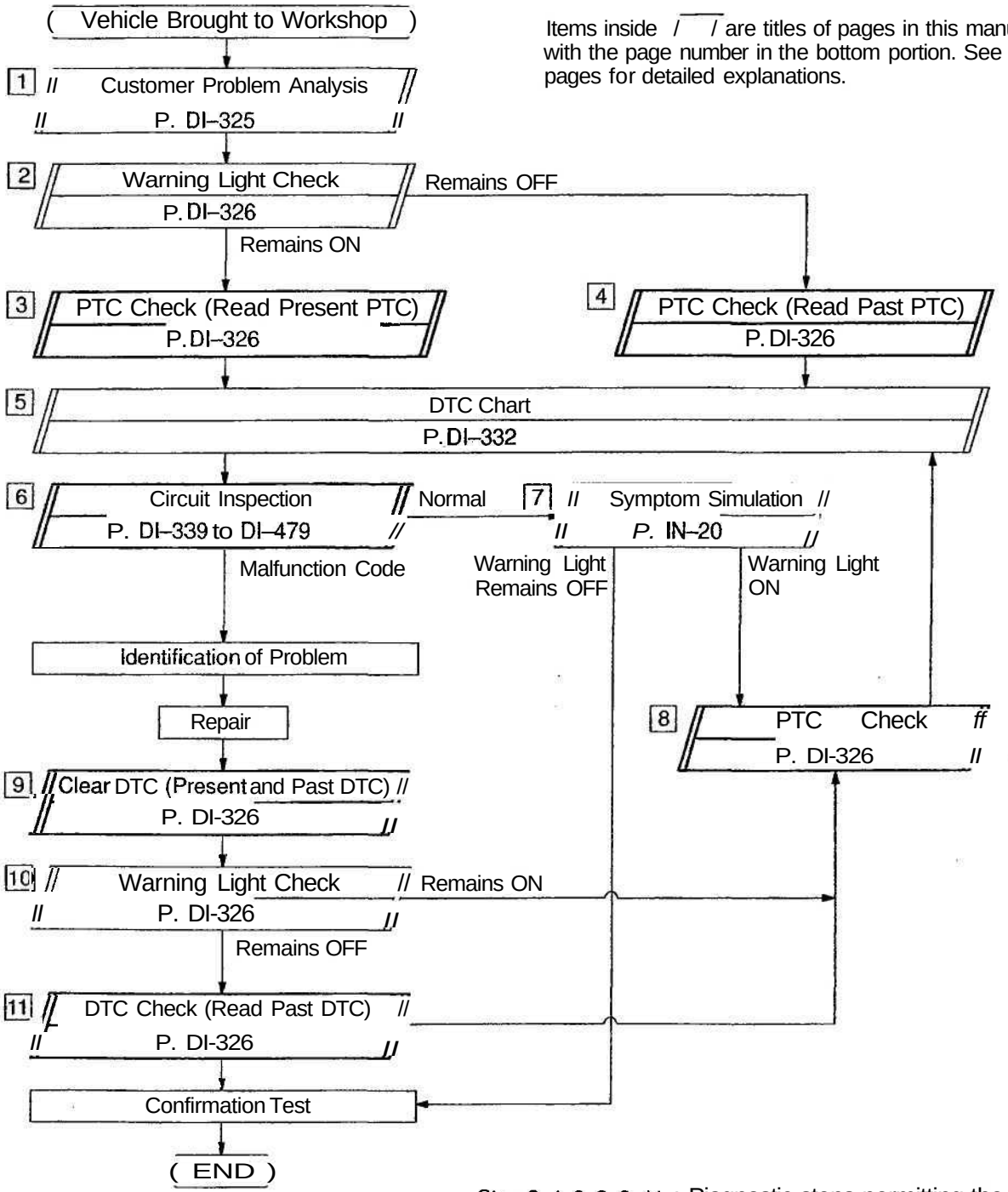

Items inside / / are titles of pages in this manual, with the page number in the bottom portion. See the pages for detailed explanations.

Step 3, 4, 6, 8, 9, 11 : Piagnostic steps permitting the use of the TOYOTA hand–held tester.

DI6OX-01

CUSTOMER PROBLEM ANALYSIS CHECK

Supplemental Restraint System Check Sheet

Inspector's Name

Customer's Name		Registration No.	
		Registration Year	/ /
		Frame No.	
Date Vehicle Brought In	/ /	Odometer Reading	km Miles

Date Problem Occurred	/ /
Weather	a Fine a Cloudy ☐ Rainy ☐ Snowy D Other
Temperature	Approx.

Vehicle Operation	n Starting D Idling a Driving [a Constant speed D Acceleration a Deceleration D Other]
Road Conditions	
Details Of Problem	

Vehicle Inspection, Repair History Prior to Occurrence of Malfunction (Including Supplemental Restraint System)	

Diagnosis System Inspection

SRS Warning Light Inspection	1st Time	☐ Remains ON n Sometimes Lights Up a Does Not Light Up
	2nd Time	D Remains ON O Sometimes Lights Up D Does Not Light Up
DTC Inspection	1st Time	D Normal Code ☐ Malfunction Code [Code.]
	2nd Time	☐ Normal Code D Malfunction Code [Code.]

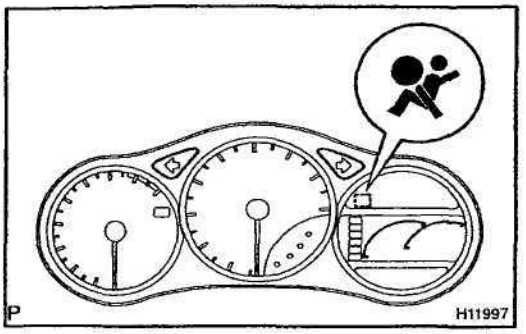

PRE-CHECK

1. SRS WARNING LIGHT CHECK

(a) Turn the ignition switch to the ON position and check that the SRS warning light lights up.

(b) Check that the SRS warning light goes out after approx. 6 seconds.

HINT:

- When the ignition switch is at ON and the SRS warning light remains on or flashes, the airbag sensor assembly has detected a malfunction code.
- If, after approx. 6 seconds have elapsed, the SRS warning light sometimes lights up or the SRS warning light lights up even when the ignition switch is OFF, a short in the SRS warning light circuit can be considered likely. Proceed to "SRS warning light circuit malfunction" on page DI-474.

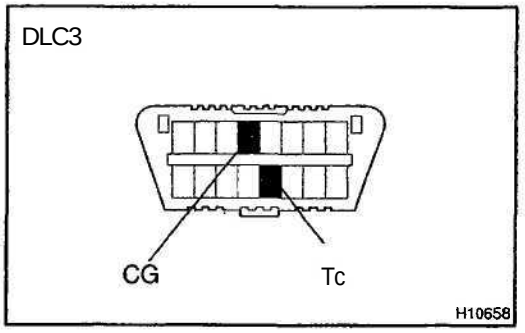

2. DTC CHECK (Using diagnosis check wire)

(a) Present troubles codes:
Output the DTC.
(1) Turn the ignition switch to the ON position and wait for approx. 20 seconds.
(2) Using SST, connect terminals Tc and CG of the DLC3.
SST 09843-18020

NOTICE:

Pay due attention to the terminal connecting position to avoid a malfunction.

(b) Past troubles codes:
Output the DTC.
(1) Using service wire, connect terminals Tc and CG of the DLC3.
SST 09843-18020
(2) Turn the ignition switch to the ON position and wait for approx. 20 seconds.

NOTICE:

Pay due attention to the terminal connecting position to avoid a malfunction.

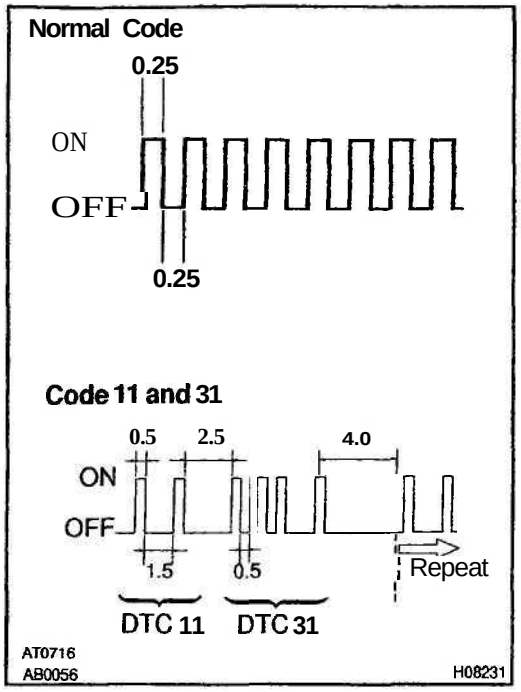

(c) Read the DTC.

Read the 2–digit DTC as indicated by the number of times the SRS warning light blinks. As an example, the blinking patterns, normal, 11 and 31 are shown in the illustration.

- Normal code indication
  The light will blink 2 times per second.
- Malfunction code indication
  The first blinking output indicates the first digit of a 2–digit DTC. After a 1.5–second pause, the second blinking output will indicate the second digit.

If there are 2 or more codes, there will be a 2.5–second pause between each code. After all the codes have been output, there will be a 4.0–second pause and they will all be repeated.

HINT:

- In the event of a number of trouble codes, indication will start from the smallest numbered code.
- If a DTC is not output or a DTC is output without terminal connection, proceed to the Tc terminal circuit inspection on page DI–479.

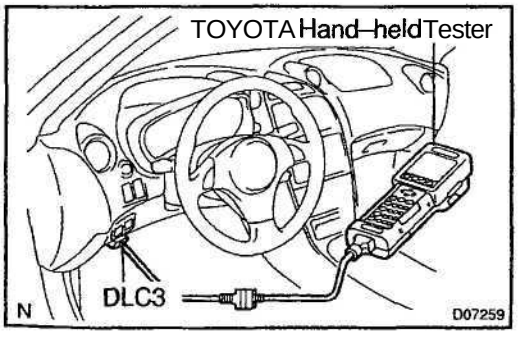

3. DTC CHECK (Using TOYOTA hand–held tester)

(a) Hook up the TOYOTA hand–held tester to the DLC3.

(b) Read the DTCs by following the prompts on the tester screen.

HINT:

Please refer to the TOYOTA hand–held tester operator's manual for further details.

4. DTC CLEARANCE (Not using service wire)

When the ignition switch is turned off, the diagnostic trouble code is cleared.

HINT:

DTC might not be cleared by turning the ignition switch OFF. In this case, proceed to the next step.

5. DTC CLEARANCE (Using service wire)

(a) Connect the 2 service wires to terminals Tc and A/B of DLC3.

(b) Turn the ignition switch to ON and wait for approx. 6 seconds.

(c) Starting with the Tc terminal, ground alternately terminal Tc and terminal A/B twice each in cycles of 1.0 second. Make sure that the terminals are grounded. Ensure the terminal Tc remain grounded.

HINT:

When alternately grounding terminals Tc and A/B, release ground from one terminal and immediately ground the other terminal within an interval of 0.2 seconds.

If DTCs are not cleared, repeat the above procedure until the codes are cleared.

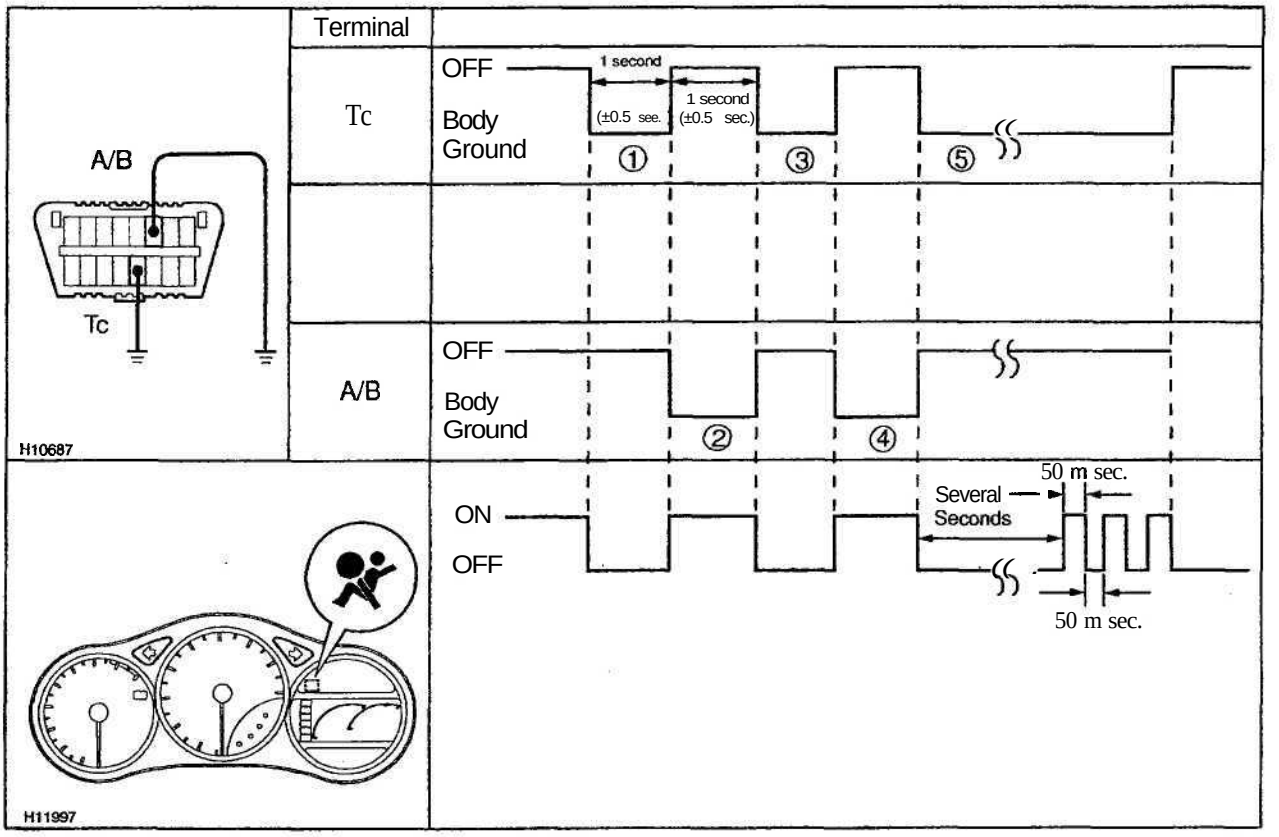

(d) Several seconds after doing the clearing procedure, the SRS warning light will blink in a 50 - m sec. cycle to indicate the codes which have been cleared.

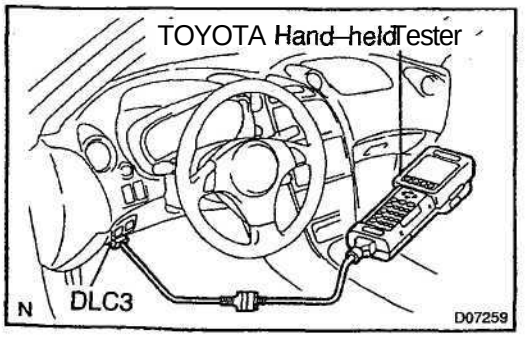

6. DTC CLEARANCE (Using TOYOTA hand-held tester)

(a) Hook up the TOYOTA hand-held tester to the DLC3.

(b) Clear the DTCs by following the prompts on the tester screen.

HINT:

Please refer to the TOYOTA hand-held tester operation's manual for further details.

7. RELEASE METHOD OF AIRBAG ACTIVATION PREVENTION MECHANISM

An airbag activation prevention mechanism is built into the connector for the squib circuit of the SRS.

When release of the airbag activation prevention mechanism is directed in the troubleshooting procedure, as shown in the illustration of the connectors on the next pages, insert paper which has the same thickness as the male terminal between the terminal and the short spring.

CAUTION:

Never release the airbag activation prevention mechanism on the squib connector.

NOTICE:

- **Do not release the airbag activation prevention mechanism unless specifically directed by the troubleshooting procedure.**
- **If the inserted paper is too thick the terminal and short spring may be damaged, so always use paper with the same thickness as the male terminal.**

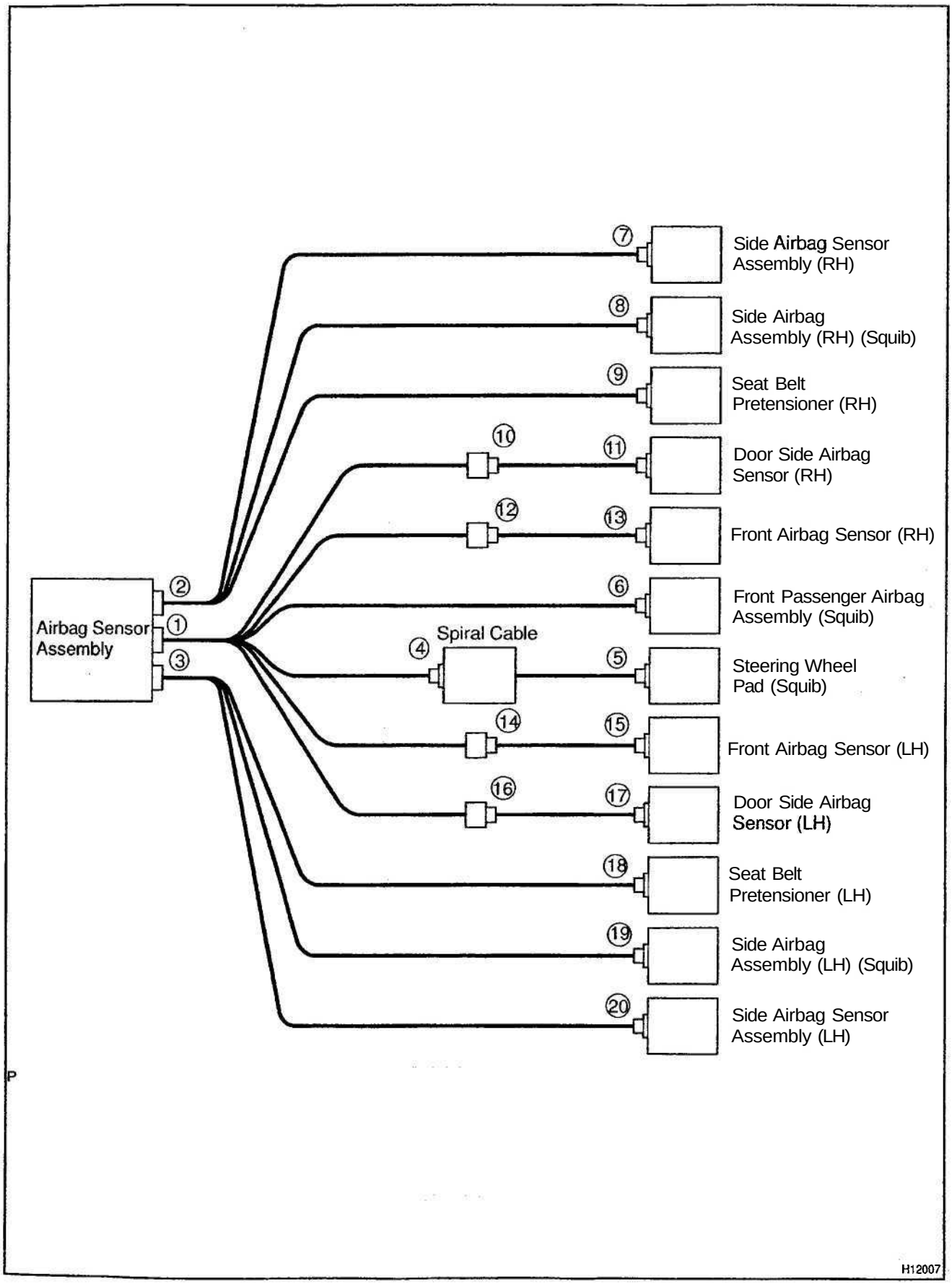
Airbag Sensor Assembly
①
②
③
Spiral Cable
④
⑤ Steering Wheel Pad (Squib)
⑥ Front Passenger Airbag Assembly (Squib)
⑦ Side Airbag Sensor Assembly (RH)
⑧ Side Airbag Assembly (RH) (Squib)
⑨ Seat Belt Pretensioner (RH)
⑩
⑪ Door Side Airbag Sensor (RH)
⑫
⑬ Front Airbag Sensor (RH)
⑭
⑮ Front Airbag Sensor (LH)
⑯
⑰ Door Side Airbag Sensor (LH)
⑱ Seat Belt Pretensioner (LH)
⑲ Side Airbag Assembly (LH) (Squib)
⑳ Side Airbag Sensor Assembly (LH)
H12007

Airbag Sensor Assembly Connector

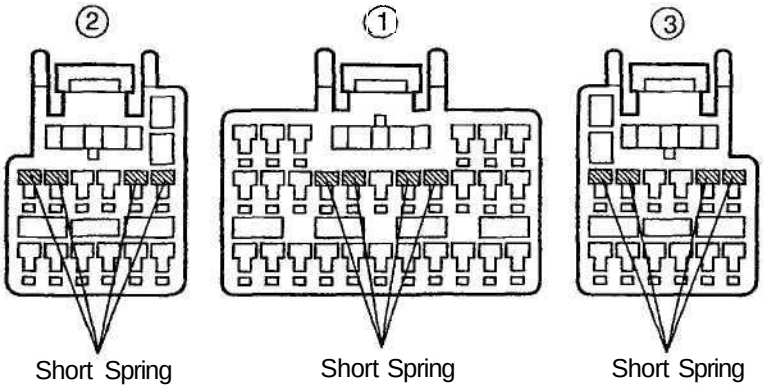

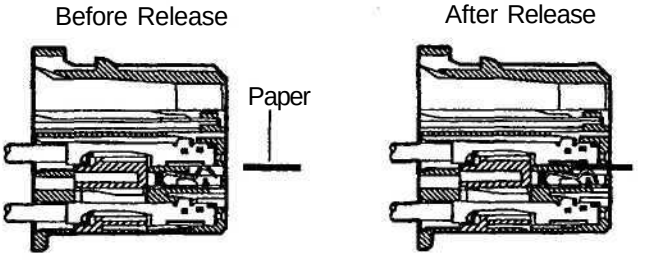

Connector ④ ⑤ ⑥

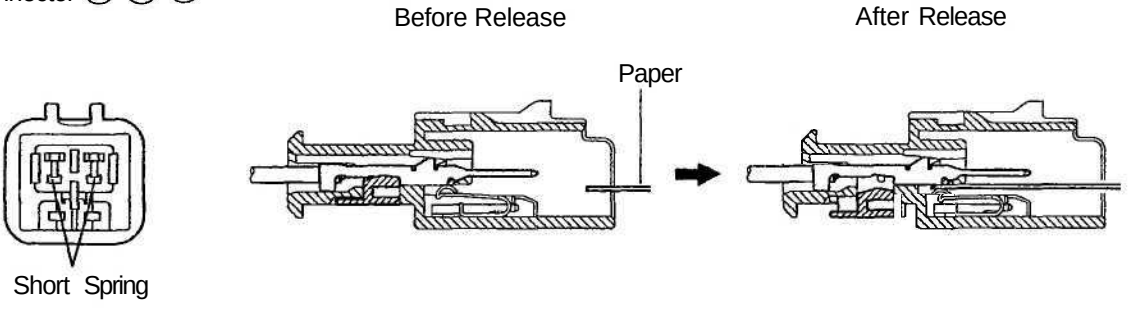

Connector® ©

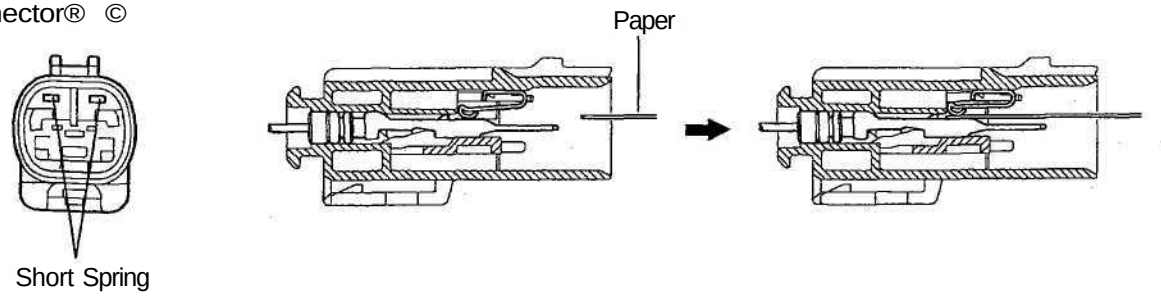

H01356
H01233
H02248 H02249
H09672 H09658

H10693

DI6OZ-01

DIAGNOSTIC TROUBLE CODE CHART

If a malfunction code is displayed during the DTC check, check the circuit listed for that code in the table below (Proceed to the page given for that circuit.).

DTC No. (See Page)	Detection Item	Trouble Area	SRS Warning Light
B0100/13 (DI–339)	• Short in D squib circuit	• Steering wheel pad (squib) • Spiral cable • Airbag sensor assembly • Wire harness	ON
B0101/14 (DI–344)	• Open in D squib circuit	• Steering wheel pad (squib) • Spiral cable • Airbag sensor assembly • Wire harness	ON
B0102/11 (DI–348)	• Short in D squib circuit (to ground)	• Steering wheel pad (squib) • Spiral cable • Airbag sensor assembly • Wire harness	ON
B0103/12 (DI–352)	• Short in D squib circuit (to B+)	• Steering wheel pad (squib) • Spiral cable • Airbag sensor assembly • Wire harness	ON
B0105/53 (DI–356)	• Short in P squib circuit	• Front passenger airbag assembly (squib) • Airbag sensor assembly • Wire harness	ON
B0106/54 (DI–360)	• Open in P squib circuit	• Front passenger airbag assembly (squib) • Airbag sensor assembly • Wire harness	ON
B0107/51 (DI–363)	• Short in P squib circuit (to ground).	• Front passenger airbag assembly (squib) • Airbag sensor assembly • Wire harness	ON
B0108/52 (DI–366)	• Short in P squib circuit (to B+)	• Front passenger airbag assembly (squib) • Airbag sensor assembly • Wire harness	ON
B0110/43 (DI–369)	• Short in side squib (RH) circuit	• Side airbag assembly RH (squib) • Airbag sensor assembly • Wire harness	Blink
B0111/44 (DI–373)	• Open in side squib (RH) circuit	• Side airbag assembly RH (squib) • Airbag sensor assembly • Wire harness	Blink
B0112/41 (DI–379)	• Short in side squib (RH) circuit (to ground)	• Side airbag assembly RH (squib) • Airbag sensor assembly • Wire harness	Blink
B0113/42 (DI–379)	• Short in side squib (RH) circuit (to B+)	• Side airbag assembly RH (squib) • Airbag sensor assembly • Wire harness	Blink
B0115/47 (DI–382)	• Short in side squib (LH) circuit	• Side airbag assembly LH (squib) • Airbag sensor assembly • Wire harness	Blink
B0116/48 (DI–386)	• Open in side squib (LH) circuit	• Side airbag assembly LH (squib) • Airbag sensor assembly • Wire harness	Blink

DTC No. (See Page)	Detection Item	Trouble Area	SRS Warning Light
B0117/45 (DI–389)	• Short in side squib (LH) circuit (to ground)	• Side airbag assembly LH (squib) • Airbag sensor assembly • Wire harness	Blink
B0118/46 (DI–392)	• Short in side squib (LH) circuit (to B+)	• Side airbag assembly LH (squib) • Airbag sensor assembly • Wire harness	Blink
B0130/63 (DI–395)	• Short in P/T squib (RH) circuit	• Seat belt pretensioner RH (squib) • Airbag sensor assembly • Wire harness	Blink
B0131/64 (DI–399)	• Open in P/T squib (RH) circuit	• Seat belt pretensioner RH (squib) • Airbag sensor assembly • Wire harness	Blink
B0132/61 (DI–402)	• Short in P/T squib (RH) circuit (to ground)	• Seat belt pretensioner RH (squib) • Airbag sensor assembly • Wire harness	Blink
B0133/62 (DI–405)	• Short in P/T squib (RH) circuit (to B+)	• Seat belt pretensioner RH (squib) • Airbag sensor assembly • Wire harness	Blink
B0135/73 (DM08)	• Short in P/T squib (LH) circuit	• Seat belt pretensioner LH (squib) • Airbag sensor assembly • Wire harness	Blink
B0136/74 (DI–412)	• Open in P/T squib (LH) circuit	• Seat belt pretensioner LH (squib) •Airbag sensor assembly • Wire harness	Blink
B0137/71 (DI–415)	• Short in P/T squib (LH) circuit (to ground)	• Seat belt pretensioner LH (squib) • Airbag sensor assembly •Wire harness	Blink
B0138/72 (DM18)	• Short in P/T squib (LH) circuit (to B+)	• Seat belt pretensioner LH (squib) • Airbag sensor assembly • Wire harness	Blink
B1100/31 (DM21)	• Airbag sensor assembly malfunction	• Airbag sensor assembly	ON
B1140/32 (DM23)	• Side airbag sensor assembly (RH) malfunction	• Side airbag sensor assembly (RH) • Airbag sensor assembly • Wire harness	Blink
B1141/33 (DM31)	•Side airbag sensor assembly (LH) malfunction	• Side airbag sensor assembly (LH) • Airbag sensor assembly • Wire harness	Blink
B1142/B1143/34 (DM39)	• Door side airbag sensor (RH) malfunction	• Door side airbag sensor (RH) • Airbag sensor assembly • Instrument panel wire harness • RH front door wire harness	ON
B1144/B1145/35 (DI–447)	• Door side airbag sensor (LH) malfunction	• Door side airbag sensor (LH) • Airbag sensor assembly • Instrument panel wire harness • LH front door wire harness	ON
B1156/B1157/15 (DM55)	• Front airbag sensor (RH) malfunction	• Front airbag sensor (RH) • Airbag sensor assembly • Instrument panel wire harness • Engine room No. 2 wire harness	ON

DTC No. (See Page)	Detection Item	Trouble Area	SRS Warning Light
B1158/B1159/ 16 (DM63)	• Front airbag sensor (LH) malfunction	• Front airbag sensor (LH) •Airbag sensor assembly • Instrument panel wire harness • Engine room main wire harness	ON
Normal (DM71)	• System normal	–	OFF
	• Voltage source drop	• Battery • Airbag sensor assembly	ON

HINT:

- When the SRS warning light remains lit up and the DTC is the normal code, this means a voltage source drops.
  This malfunction is not stored in memory by the airbag sensor assembly and if the power source voltage returns to normal, the SRS warning light will automatically go out.
- When 2 or more codes are indicated, the codes will be displayed in numeral order starting from the lowest numbered code.
- If a code not listed on the chart is displayed, the airbag sensor assembly is faulty.

DI6P6-01

PARTS LOCATION

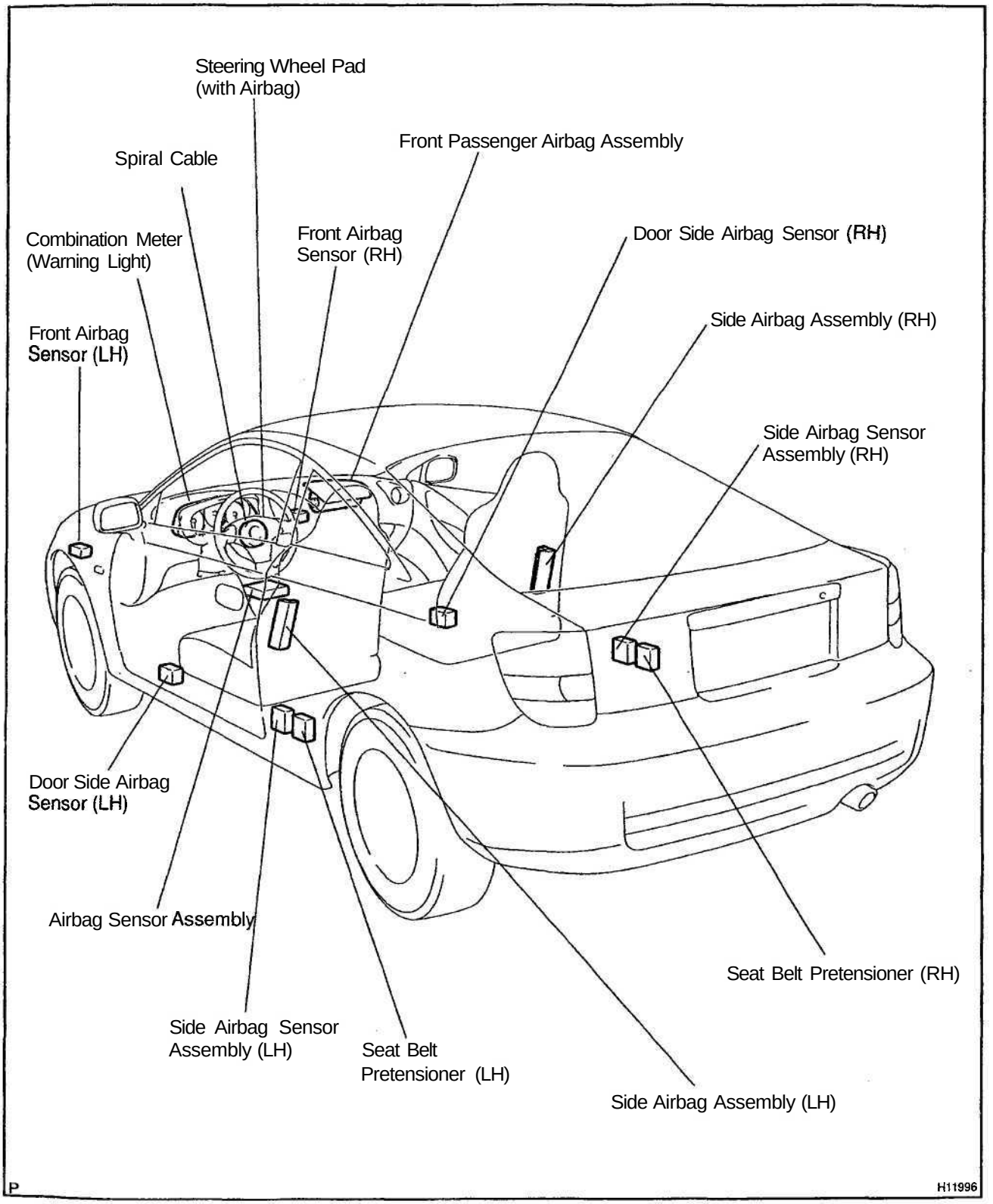

DI6P1-01

TERMINALS OF ECU

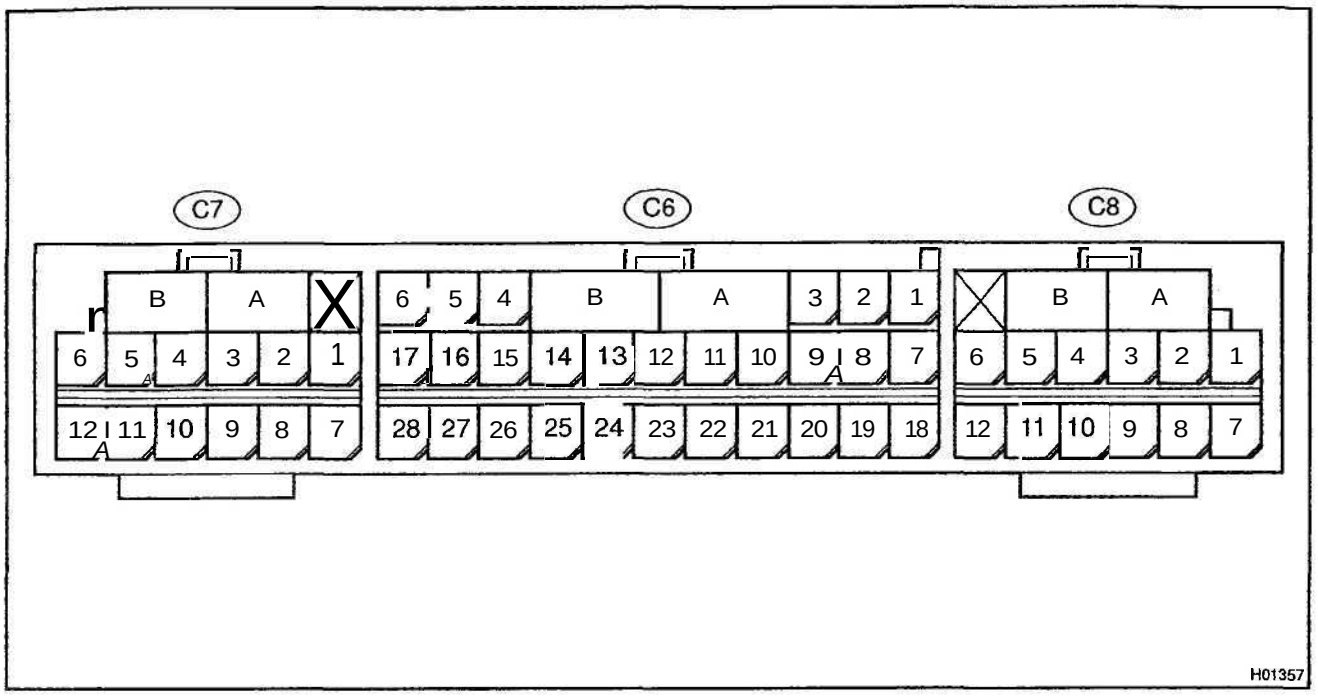

No.	Symbol	Terminal Name
A	–	Electrical Connector Check Mechanism
B	–	Electrical Connector Check Mechanism
C6-3	LA	SRS Warning Light
C6 – 5	IG2	Power Source
C6-6	IG1	Power Source
C6 – 7	DMR+	Door Side Airbag Sensor (RH)
C6-8	DMR–	Door Side Airbag Sensor (RH)
C6-9	+SR	Front Airbag Sensor (RH)
C6 – 10	P+	Squib (Passenger)
C6-11	P-	Squib (Passenger)
C6-12	SIL	Diagnosis
C6 – 13	D–	Squib (Driver)
C6 – 14	D+	Squib (Driver)
C6 – 15	+SL	Front Airbag Sensor (LH)
C6 – 16	DML–	Door Side Airbag Sensor (LH)
C6 – 17	DML+	Door Side Airbag Sensor (LH)
C6 – 19	Tc	Diagnosis
C6 – 20	–SR	Front Airbag Sensor (RH)
C6 – 23	GSW2	ECM
C6 – 26	–SL	Front Airbag Sensor (LH)
C6 – 27	E1	Ground
C6 – 28	E2	Ground
C7-1	PL-	Squib (Seat Belt Pretensioner, LH)
C7 – 2	PL+	Squib (Seat Belt Pretensioner, LH)
C7 – 5	SFL+	Squib (Side, LH)

No.	Symbol	Terminal Name
C7-6	SFL-	Squib (Side, LH)
C7-7	VUPL	Side Airbag Sensor (LH)
C7-9	SSL+	Side Airbag Sensor (LH)
C7-10	FSL	Side Airbag Sensor (LH)
C7 – 11	LBE+	Body ECU
C7-12	ESL	Side Airbag Sensor (LH)
C8 – 1	SFR-	Squib (Side, RH)
C8-2	SFR+	Squib (Side, RH)
C8-5	PR+	Squib (Pretensioner, RH)
C8 – 6	PR-	Squib (Pretensioner, RH)
C8 – 7	ESR	Side Airbag Sensor (RH)
C8-9	FSR	Side Airbag Sensor (RH)
C8 – 10	SSR+	Side Airbag Sensor (RH)
C8-12	VUPR	Side Airbag Sensor (RH)

DISP2-01

PROBLEM SYMPTOMS TABLE

Proceed with troubleshooting of each circuit in the table below.

Symptom	Suspect Area	See page
• With the ignition switch in ON position, the SRS warning light sometimes lights up after approx. 6 seconds have elapsed.	• SRS warning light circuit	DM74
« SRS warning light is always lit up even when ignition switch is in the LOCK position.		
• With the ignition switch in ON position, the SRS warning light does not light up.		
• DTC is not displayed.	• Tc terminal circuit	DI–479
• SRS warning light is always lit up at the time of DTC check procedure.		
• DTC is displayed without Tc and E1 terminal connection.		

DI6P3-01

CIRCUIT INSPECTION

DTC	B0100/13	Short in D Squib Circuit

CIRCUIT DESCRIPTION

The D squib circuit consists of the airbag sensor assembly, spiral cable and steering wheel pad.
It causes the airbag to deploy when the airbag deployment conditions are satisfied.
For details of the function of each component, see OPERATION on page RS-2.
DTC B0100/13 is recorded when a short is detected in the D squib circuit.

DTC No.	DTC Detecting Condition	Trouble Area
B0100/13	• Short circuit between D+ wire harness and D– wire harness of squib • D squib malfunction • Spiral cable malfunction • Airbag sensor assembly malfunction	• Steering wheel pad (D squib) • Spiral cable • Airbag sensor assembly • Wire harness

WIRING DIAGRAM

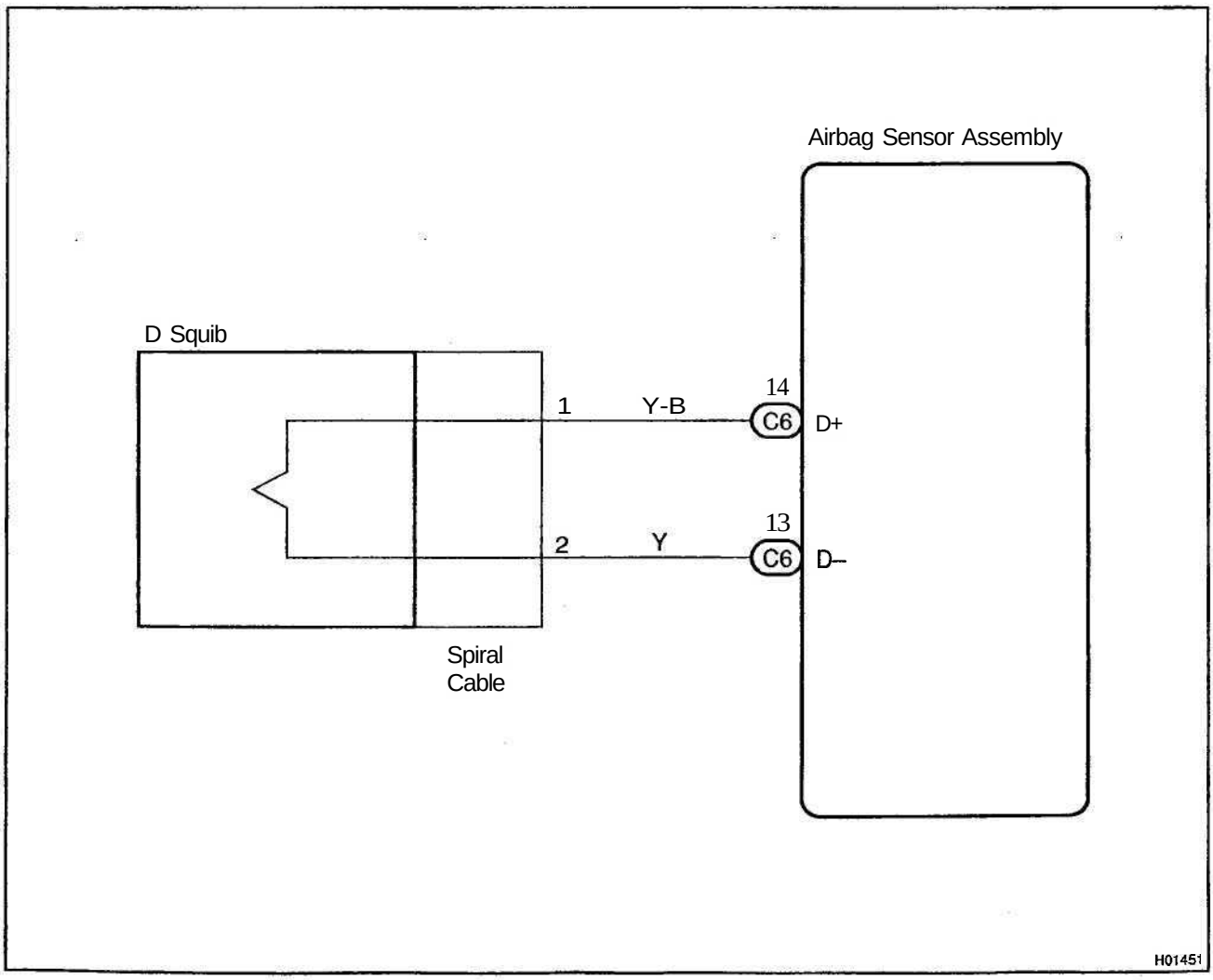

INSPECTION PROCEDURE

1	**Prepare for inspection (See step 1 on page DI–471).**

2	**Check D squib circuit.**

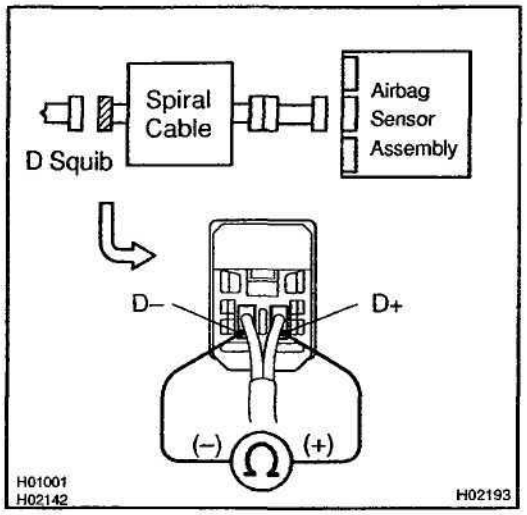

PREPARATION:

Release the airbag activation prevention mechanism of the connector (on the airbag sensor assembly side) between the airbag sensor assembly and the spiral cable (See page DI–326).

CHECK:

For the connector (on the spiral cable side) between the spiral cable and the steering wheel pad, measure the resistance between D+ and D–.

OK:

Resistance: 1 Ma or Higher

NG → **Go to step 5.**

OK

3	**Check airbag sensor assembly.**

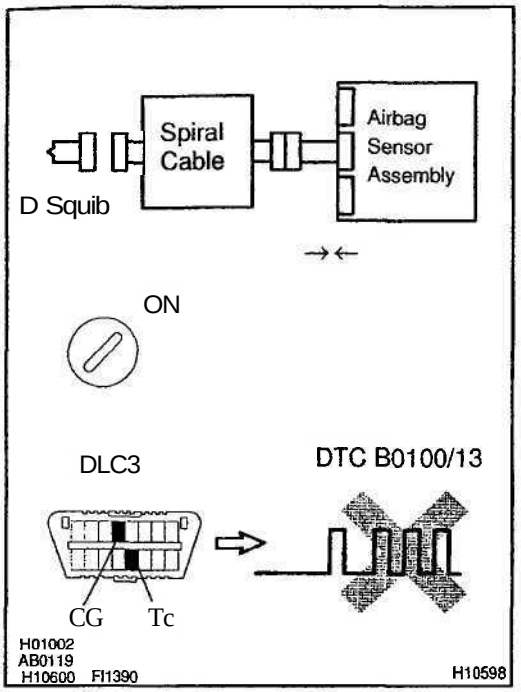

PREPARATION:

(a) Connect the connector to the airbag sensor assembly.
(b) Connect negative (-) terminal cable to the battery, and wait at least for 2 seconds.

CHECK:

(a) Turn the ignition switch to ON and wait at least for 20 seconds.
(b) Clear the DTC stored in memory (See page DI–326).
(c) Turn the ignition switch to LOCK, and wait at least for 20 seconds.
(d) Turn the ignition switch to ON, and wait at least for 20 seconds.
(e) Check the DTC (See page DI-326).

OK:

DTC B0100/13 is not output.

HINT:

Codes other than code B0100/13 may be output at this time, but they are not relevant to this check.

NG → **Replace airbag sensor assembly.**

OK

4	Check D squib.

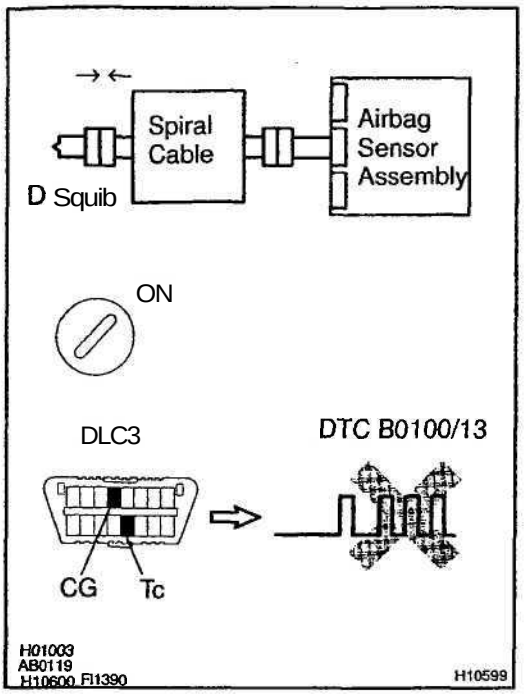

PREPARATION:

(a) Turn the ignition switch to LOCK.
(b) Disconnect negative (-) terminal cable from the battery, and wait at least for 90 seconds.
(c) Connect the steering wheel pad connector.
(d) Connect negative {-) terminal cable to the battery, and wait at least for 2 seconds.

CHECK:

(a) Turn the ignition switch to LOCK, and wait at least for 20 seconds.
(b) Turn the ignition switch to ON, and wait at least for 20 seconds.
(c) Clear the DTC stored in memory (See page DI-326).
(d) Turn the ignition switch to LOCK, and wait at least for 20 seconds.
(e) Turn the ignition switch to ON, and wait at least for 20 seconds.
(f) Check the DTC (See page DI-326).

OK:

DTC B0100/13 is not output.

HINT:
Codes other than code B0100/13 may be output at this time, but they are not relevant to this check.

NG → **Replace steering wheel pad.**

OK →

From the results of the above inspection, the malfunctioning part can now be considered normal. To make sure of this, use the simulation method to check.

5	Check spiral cable.

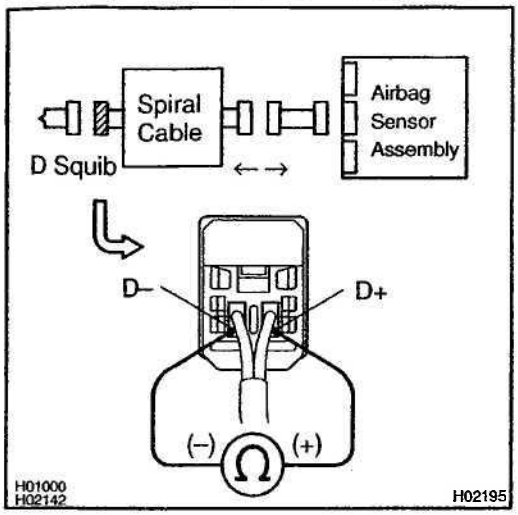

PREPARATION:

(a) Disconnect the connector between the airbag sensor assembly and the spiral cable.

(b) Release the airbag activation prevention mechanism of the spiral cable connector on the airbag sensor assembly side (See page DI–326).

CHECK:

For the connector (on the spiral cable side) between the spiral cable and the steering wheel pad, measure the resistance between D+ and D–.

OK:

Resistance: 1 MΩ or Higher

NG → **Repair or replace spiral cable.**

OK

6	Check harness between airbag sensor assembly and spiral cable.

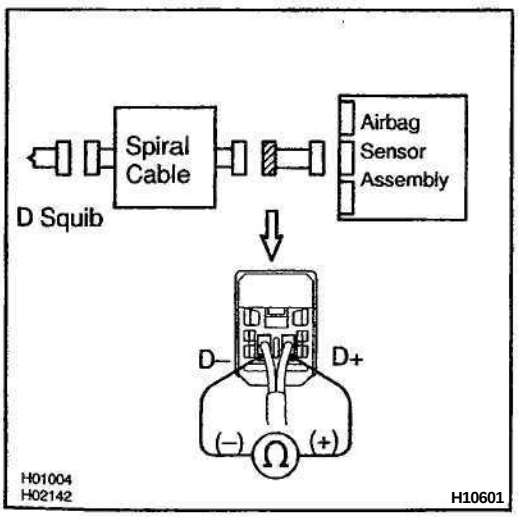

PREPARATION:

Release the airbag activation prevention mechanism of the connector (on the airbag sensor assembly side) between the airbag sensor assembly and the spiral cable (See page DI–326).

CHECK:

For the connector (on the spiral cable side) between the airbag sensor assembly and the spiral cable, measure the resistance between D+ and D–.

OK:

Resistance: 1 MΩ or Higher

NG → **Repair or replace harness or connector between airbag sensor assembly and spiral cable.**

OK

From the results of the above inspection, the malfunctioning part can now be considered normal. To make sure of this, use the simulation method to check.

DTC	B0101/14	Open in D Squib Circuit

CIRCUIT DESCRIPTION

The D squib circuit consists of the airbag sensor assembly, spiral cable and steering wheel pad.
It causes the airbag to deploy when the airbag deployment conditions are satisfied.
For details of the function of each component, see OPERATION on page RS–2.
DTC B0101/14 is recorded when an open is detected in the D squib circuit.

DTC No.	DTC Detecting Condition	Trouble Area
B0101/14	• Open circuit in D+ wire harness or D– wire harness of squib • D squib malfunction • Spiral cable malfunction • Airbag sensor assembly malfunction	• Steering wheel pad (D squib) • Spiral cable •Airbag sensor assembly • Wire harness

WIRING DIAGRAM

See page DI–339.

INSPECTION PROCEDURE

1	Prepare for inspection (See step 1 on page DI–471).

2	Check D squib circuit.

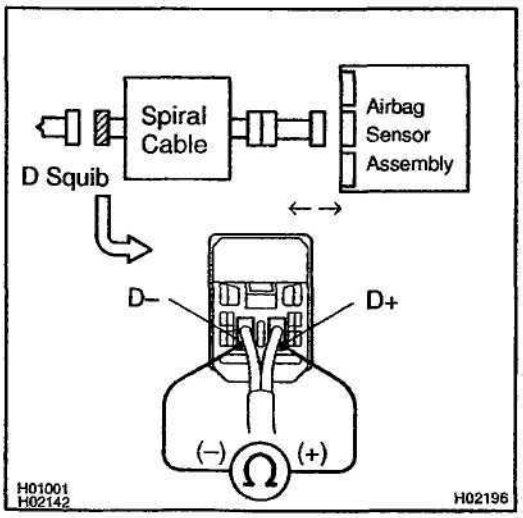

CHECK:

For the connector (on the spiral cable side) between the spiral cable and the steering wheel pad, measure the resistance between D+ and D–.

OK:

Resistance: Below 1 Ω

NG → **Go to step 5.**

OK

3	Check airbag sensor assembly.

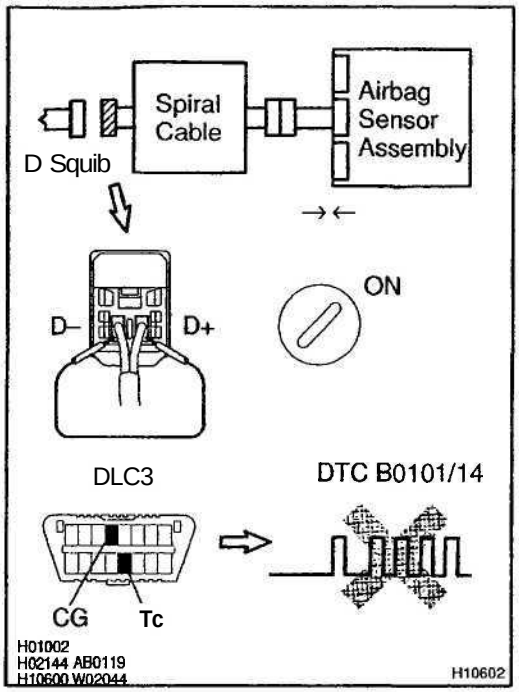

PREPARATION:

(a) Connect the connector to the airbag sensor assembly.
(b) Using a service wire, connect D+ and D– of the connector (on the spiral cable side) between the spiral cable and the steering wheel pad.
(c) Connect negative (-) terminal cable to the battery, and wait at least for 2 seconds.

CHECK:

(a) Turn the ignition switch to ON, and wait at least for 20 seconds.
(b) Clear the DTC stored in memory (See page DI–326).
(c) Turn the ignition switch to LOCK, and wait at least for 20 seconds.
(d) Turn the ignition switch to ON, and wait at least for 20 seconds.
(e) Check the DTC (See page DI-326).

OK:

DTC B0101/14 is not output.

HINT:

Codes other than code B0101/14 may be output at this time, but they are not relevant to this check.

NG	Replace airbag sensor assembly.

OK

4	Check D squib.

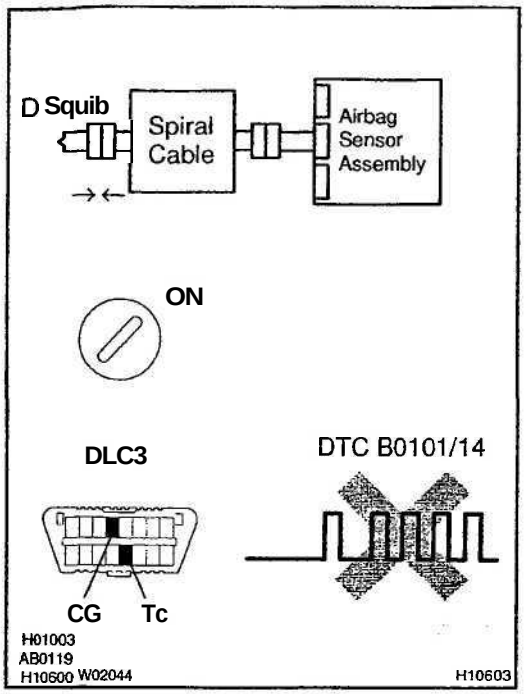

PREPARATION:

(a) Turn the ignition switch to LOCK.
(b) Disconnect negative (-) terminal cable from the battery, and wait at least for 90 seconds.
(c) Connect the steering wheel pad connector.
(d) Connect negative (-) terminal cable to the battery, and wait at least for 2 seconds.

CHECK:

(a) Turn the ignition switch to ON, and wait at least for 20 seconds.
(b) Clear the DTC stored in memory (See page DI-326).
(c) Turn the ignition switch to LOCK, and wait at least for 20 seconds.
(d) Turn the ignition switch to ON, and wait at least for 20 seconds.
(e) Check the DTC (See page DI-326).

OK:

DTC B0101/14 is not output.

HINT:

Codes other than code B0101/14 may be output at this time, but they are not relevant to this check.

NG → **Replace steering wheel pad.**

OK →

From the results of the above inspection, the malfunctioning part can now be considered normal. To make sure of this, use the simulation method to check.

5	Check spiral cable.

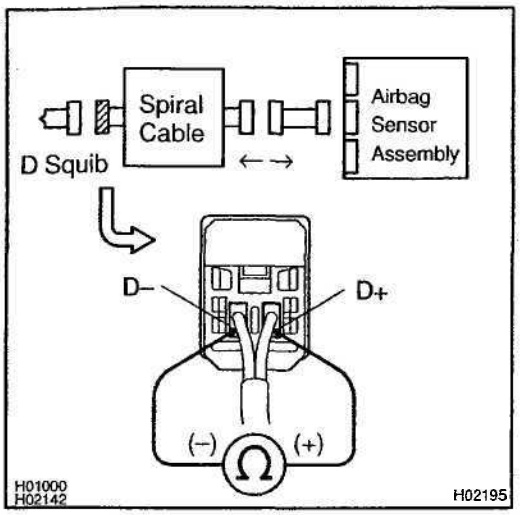

PREPARATION:
Disconnect the connector between the airbag sensor assembly and the spiral cable.

CHECK:
For the connector (on the spiral cable side) between the spiral cable and the steering wheel pad, measure the resistance between D+ and D–.

OK:

Resistance: Below 1 Ω

NG → **Repair or replace spiral cable.**

OK

6	Check harness between airbag sensor assembly and spiral cable.

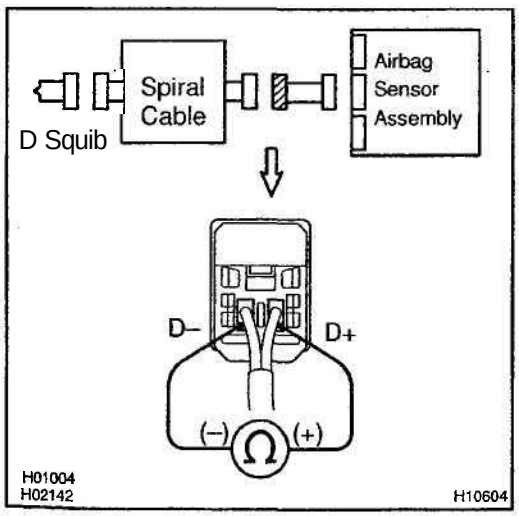

CHECK:
For the connector (on the spiral cable side) between the airbag sensor assembly and the spiral cable, measure the resistance between D+ and D–.

OK:

Resistance: Below 1 Ω

NG → **Repair or replace harness or connector between airbag sensor assembly and spiral cable.**

OK

From the results of the above inspection, the malfunctioning part can now be considered normal. To make sure of this, use the simulation method to check.

DI6PS-01

DTC	B0102/11	Short in D Squib Circuit (to Ground)

CIRCUIT DESCRIPTION

The D squib circuit consists of the airbag sensor assembly, spiral cable and steering wheel pad.
It causes the SRS to deploy when the SRS deployment conditions are satisfied.
For details of the function of each component, see OPERATION on page RS–2.
DTC B0102/11 is recorded when a ground short is detected in the D squib circuit.

DTC No.	DTC Detecting Condition	Trouble Area
B0102/11	• Short circuit in D squib wire harness (to ground) • D squib malfunction • Spiral cable malfunction • Airbag sensor assembly malfunction	• Steering wheel pad (D squib) • Spiral cable • Airbag sensor assembly • Wire harness

WIRING DIAGRAM

See page DI–339.

INSPECTION PROCEDURE

1	**Prepare for inspection (See step 1 on page DI–471).**

2	**Check** D squib circuit.

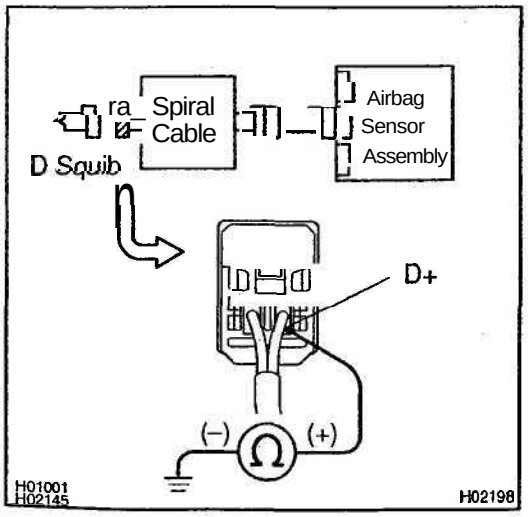

CHECK:
For the connector (on the spiral cable side) between the spiral cable and the steering wheel pad, measure the resistance between D+ and body ground.
OK:
Resistance: 1 MΩ or Higher

NG → Go to step 5.

OK

3	Check airbag sensor assembly.

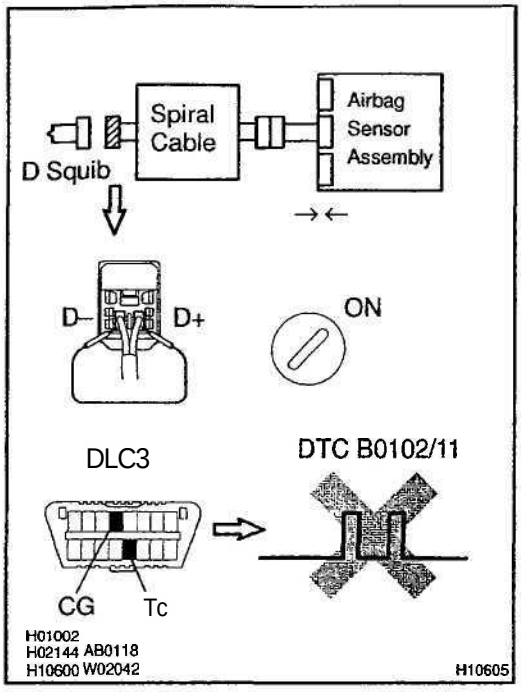

PREPARATION:

(a) Connect the connector to the airbag sensor assembly.
(b) Using a service wire, connect D+ and D- of the connector (on the spiral cable side) between the spiral cable and the steering wheel pad.
(c) Connect negative (-) terminal cable to the battery, and wait at least for 2 seconds.

CHECK:

(a) Turn the ignition switch to ON, and wait at least for 20 seconds.
(b) Clear the DTC stored in memory (See step 5 on page DI-326).
(c) Turn the ignition switch to LOCK, and wait at least for 20 seconds.
(d) Turn the ignition switch to ON, and wait at least for 20 seconds.
(e) Check the DTC (See page DI-326).

OK:

DTC B0102/11 is not output.

HINT:

Codes other than code B0102/11 may be output at this time, but they are not relevant to this check.

NG	Replace airbag sensor assembly.

OK

4	Check D squib.

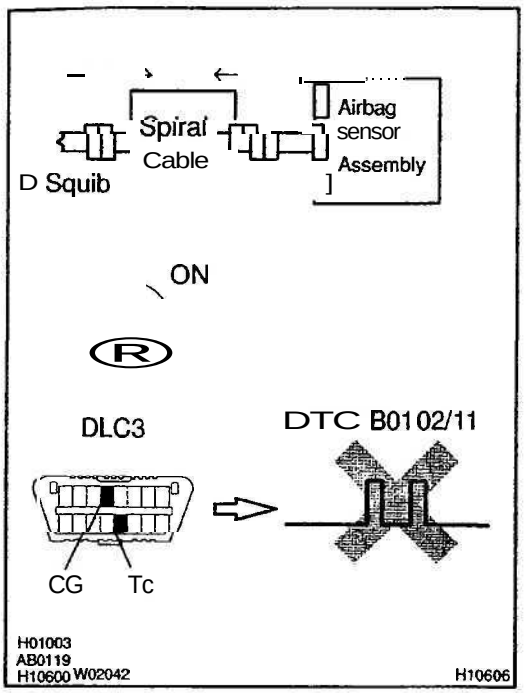

PREPARATION:

(a) Turn the ignition switch to LOCK.
(b) Disconnect negative (–) terminal cable from the battery, and wait at least for 90 seconds.
(c) Connect the steering wheel pad connector.
(d) Connect negative (–) terminal cable to the battery, and wait at least for 2 seconds.

CHECK:

(a) Turn the ignition switch to ON, and wait at least for 20 seconds.
(b) Clear the DTC stored in memory (See step 5 on page DI-326).
(c) Turn the ignition switch to LOCK, and wait at least for 20 seconds.
(d) Turn the ignition switch to ON, and wait at least for 20 seconds.
(e) Check the DTC (See page DI-326).

OK:

DTC **B0102/11** is not output.

HINT:

Codes other than code B0102/11 may be output at this time, but they are not relevant to this check.

NG → Replace steering wheel pad.

OK

From the results of the above inspection, the malfunctioning part can now be considered normal. To make sure of this, use the simulation method to check. If the malfunctioning part can not be detected by the simulation method, replace all SRS components including the wire harness.

5 **Check spiral cable.**

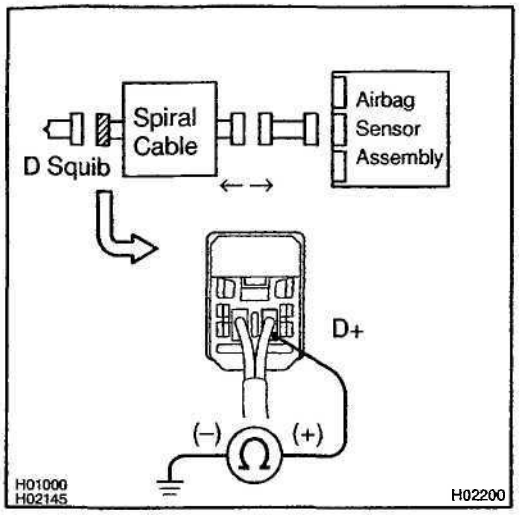

PREPARATION:
Disconnect the connector between the airbag sensor assembly and the spiral cable.

CHECK:
For the connector (on the spiral cable side) between the steering wheel pad and the spiral cable, measure the resistance between D+ and body ground.

OK:
Resistance: 1 MΩ or Higher

NG → **Repair or replace spiral cable.**

OK

6 **Check harness between airbag sensor assembly and spiral cable.**

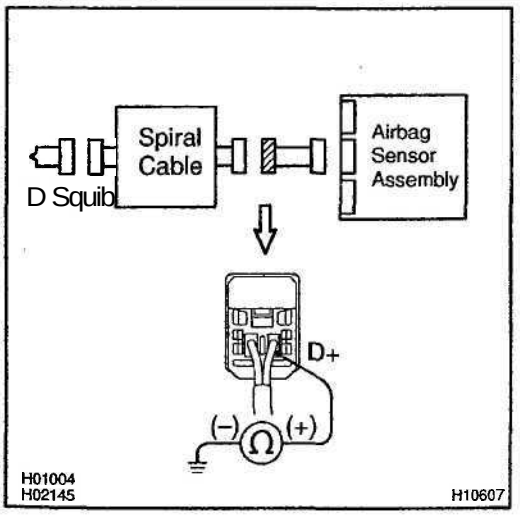

CHECK:
For the connector (on the spiral cable side) between the spiral cable and the airbag sensor assembly, measure the resistance between D+ and body ground.

OK:
Resistance: 1 MΩ or Higher

NG → **Repair or replace harness between airbag sensor assembly and spiral cable.**

OK

From the results of the above inspection, the malfunctioning part can now be considered normal. To make sure of this, use the simulation method to check. If the malfunctioning part can not be detected by the simulation method, replace all SRS components including the wire harness.

DI5P6-01

DTC	B0103/12	Short in D Squib Circuit (to B+)

CIRCUIT DESCRIPTION

The D squib circuit consists of the airbag sensor assembly, spiral cable and steering wheel pad.
It causes the SRS to deploy when the SRS deployment conditions are satisfied.
For details of the function of each component, see OPERATION on page RS–2.
DTC B0103/12 is recorded when a B+ short is detected in the D squib circuit.

DTC No.	DTC Detecting Condition	Trouble Area
B0103/12	• Short circuit in D squib wire harness (to B+) • D squib malfunction • Spiral cable malfunction • Airbag sensor assembly malfunction	• Steering wheel pad (D squib) • Spiral cable • Airbag sensor assembly • Wire harness

WIRING DIAGRAM

See page DI–339.

INSPECTION PROCEDURE

1	Prepare for inspection (See step 1 on page DI–471).

2	Check D squib circuit.

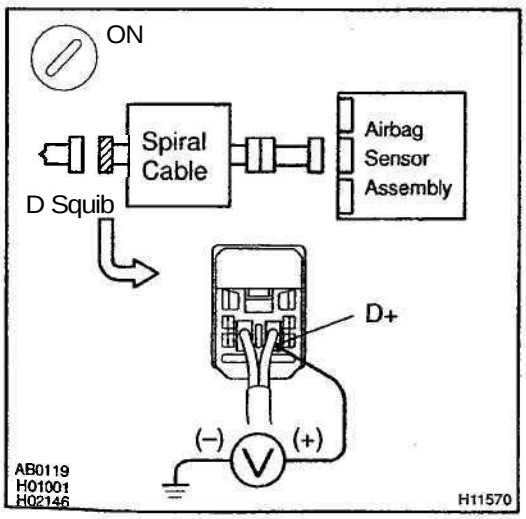

CHECK:

(a) Turn ignition switch to ON.

(b) For the connector (on the spiral cable side) between the spiral cable and the steering wheel pad, measure the voltage between D+ and body ground.

OK:

Voltage: 0 V

NG → **Go to step 5.**

OK

3	Check airbag sensor assembly.

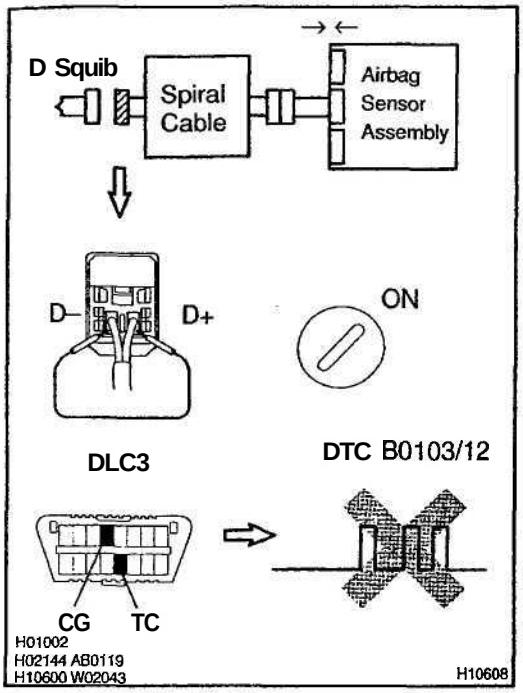

PREPARATION:

(a) Connect the connector to the airbag sensor assembly.
(b) Using a service wire, connect D+ and D– of the connector (on the spiral cable side) between the spiral cable and the steering wheel pad.
(c) Connect negative (-) terminal cable to the battery, and wait at least for 2 seconds.

CHECK:

(a) Turn the ignition switch to ON, and wait at least for 20 seconds.
(b) Clear the DTC stored in memory (See step 5 on page DI–326).
(c) Turn the ignition switch to LOCK, and wait at least for 20 seconds.
(d) Turn the ignition switch to ON, and wait at least for 20 seconds.
(e) Check the DTC (See page DI-326).

OK:

DTC B0103/12 is not output.

HINT:

Codes other than code B0103/12 may be output at this time, but they are not relevant to this check.

NG	Replace airbag sensor assembly.

OK

4	Check D squib.

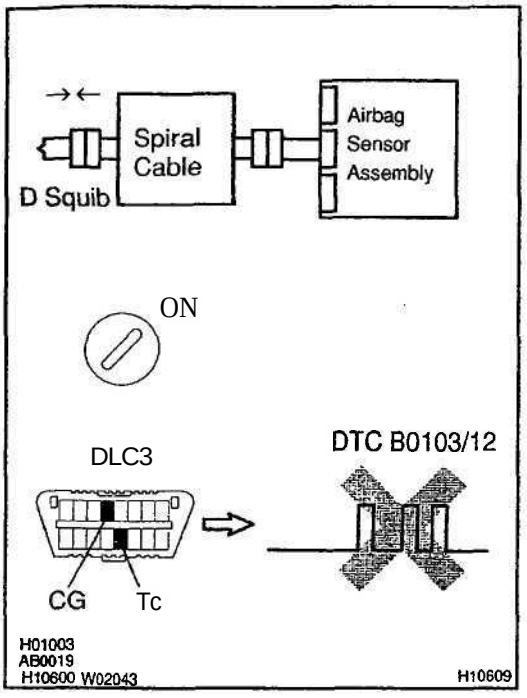

PREPARATION:

(a) Turn the ignition switch to LOCK.
(b) Disconnect negative (-) terminal cable from the battery, and wait at least for 90 seconds.
(c) Connect the steering wheel pad connector.
(d) Connect negative (-) terminal cable to the battery, and wait at least for 2 seconds.

CHECK:

(a) Turn the ignition switch to ON, and wait at least for 20 seconds.
(b) Clear the DTC stored in memory (See step 5 on page DI–326).
(c) Turn the ignition switch to LOCK, and wait at least for 20 seconds.
(d) Turn the ignition switch to ON, and wait at least for 20 seconds.
(e) Check the DTC (See page DI-326).

OK:

DTC B0103/12 is not output.

HINT:
Codes other than code B0103/12 may be output at this time, but they are not relevant to this check.

NG → **Replace steering wheel pad.**

OK →

From the results of the above inspection, the malfunctioning part can now be considered normal. To make sure of this, use the simulation method to check. If the malfunctioning part can not be detected by the simulation method, replace all SRS components including the wire harness.

5	Check spiral cable.

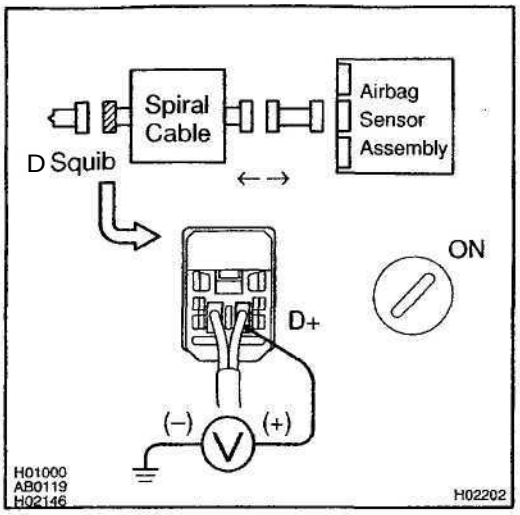

PREPARATION:

(a) Turn the ignition switch to LOCK.
(b) Disconnect the connector between the airbag sensor assembly and the spiral cable.

CHECK:

(a) Turn the ignition switch to ON.
(b) For the connector (on the spiral cable side) between the spiral cable and the steering wheel pad, measure the voltage between D+ and body ground.

OK:

Voltage: 0 V

NG → **Repair or replace spiral cable.**

OK

6	Check harness between airbag sensor assembly and spiral cable.

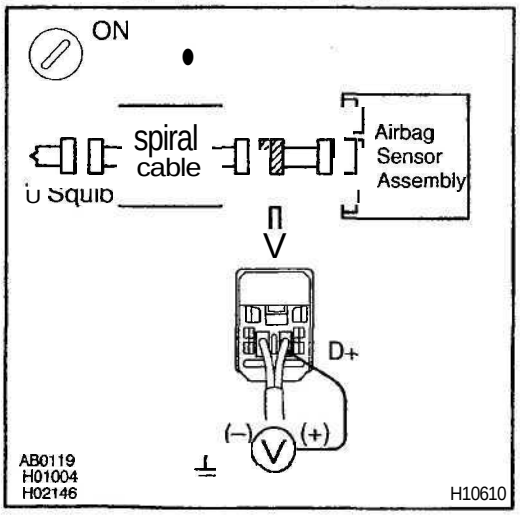

CHECK:

(a) Turn the ignition switch to ON.
(b) For the connector (on the spiral cable side) between the spiral cable and airbag sensor assembly, measure the voltage between D+ and body ground.

OK:

Voltage: 0 V

NG → Repair or replace harness between airbag sensor assembly and spiral cable.

OK

From the results of the above inspection, the malfunctioning part can now be considered normal. To make sure of this, use the simulation method to check. If the malfunctioning part can not be detected by the simulation method, replace ail SRS components including the wire harness.

D6P7-01

DTC	B0105/53	Short in P Squib Circuit

CIRCUIT DESCRIPTION

The P squib circuit consists of the airbag sensor assembly and front passenger airbag assembly.
It causes the SRS to deploy when the SRS deployment conditions are satisfied.
For details of the function of each component, see OPERATION on page RS–2.
DTC B0105/53 is recorded when a short is detected in the P squib circuit.

DTC No.	DTC Detecting Condition	Trouble Area
B0105/53	• Short circuit in P squib wire harness • P squib malfunction •Airbag sensor assembly malfunction	• Front passenger airbag assembly (P squib) • Airbag sensor assembly • Wire harness

WIRING DIAGRAM

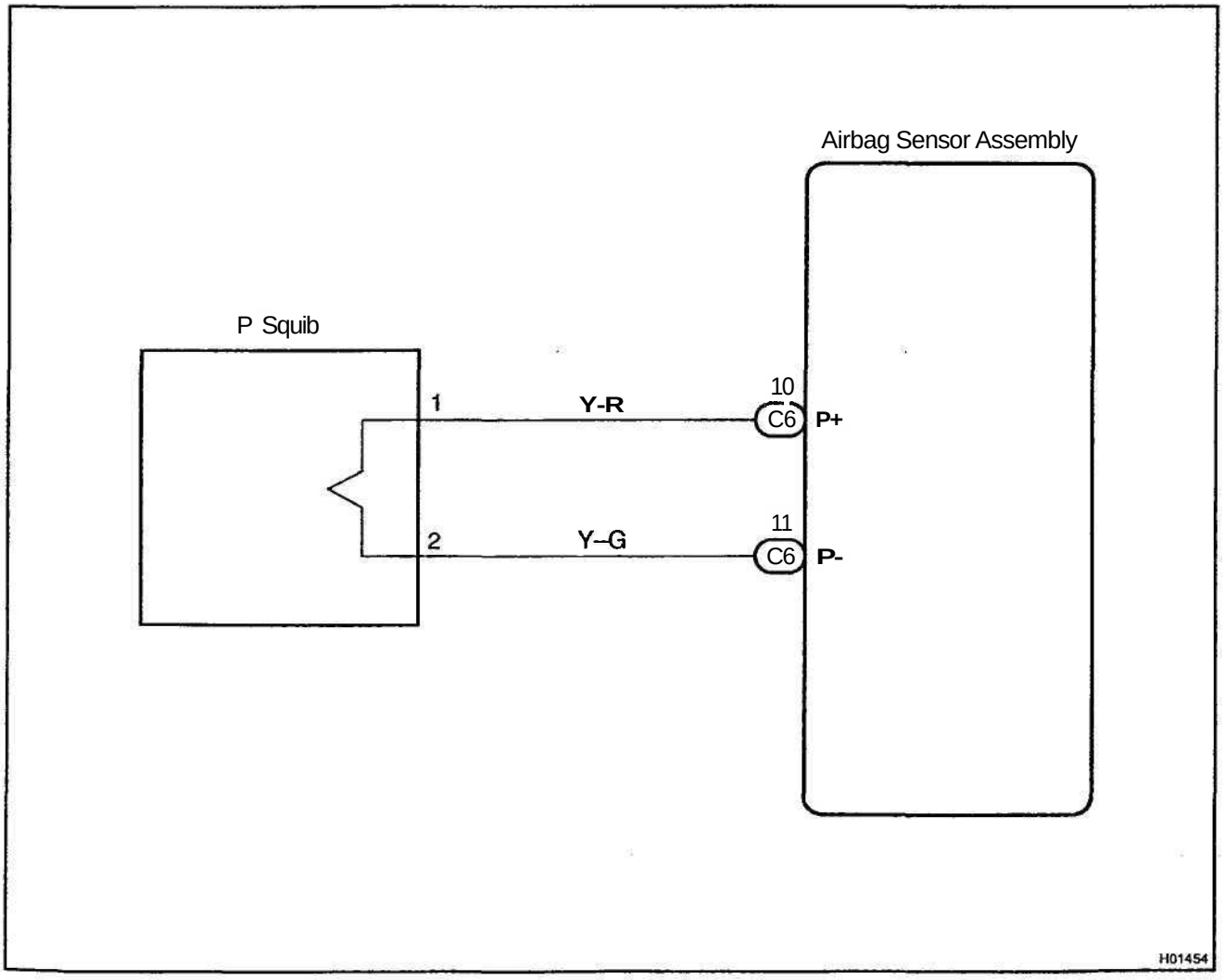

INSPECTION PROCEDURE

1	Prepare for inspection (See step 1 on page **DI–471).**

2	Check P squib circuit.

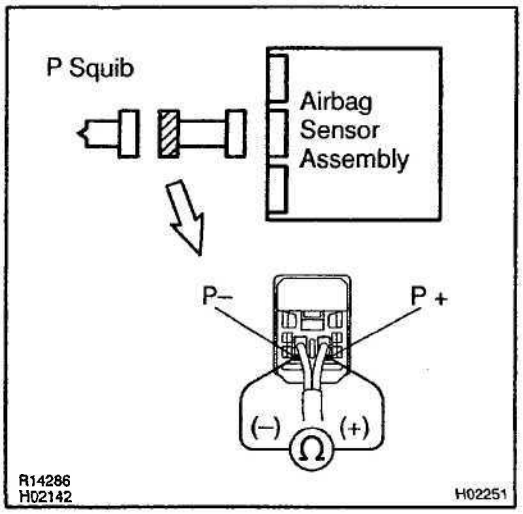

PREPARATION:

Release the airbag activation prevention mechanism of the connector (on the airbag sensor assembly side) between the front passenger airbag assembly and the airbag sensor assembly (See page DI–326).

CHECK:

For the connector (on the front passenger airbag assembly side) between the front passenger airbag assembly and the airbag sensor assembly, measure the resistance between P+ and P-.

OK:

Resistance: 1 MΩ or Higher

NG → **Repair or replace harness or connector between front passenger airbag assembly and airbag sensor assembly.**

OK

3	Check airbag sensor assembly.

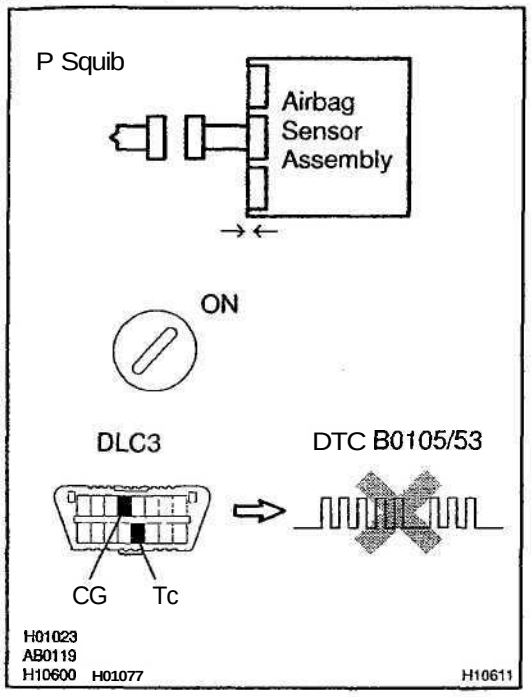

PREPARATION:

(a) Connect the connector to the airbag sensor assembly.
(b) Connect negative (-) terminal cable to the battery, and wait at least for 2 seconds.

CHECK:

(a) Turn the ignition switch to ON and wait at least for 20 seconds.
(b) Clear the DTC stored in memory (See page DI–326).
(c) Turn the ignition switch to LOCK, and wait at least for 20 seconds.
(d) Turn the ignition switch to ON, and wait at least for 20 seconds.
(e) Check the DTC (See page DI-326).

OK:

DTC B0105/53 is not output.

HINT:

Codes other than code B0105/53 may be output at this time, but they are not relevant to this check.

NG → **Replace airbag sensor assembly.**

OK

4	Check P squib.

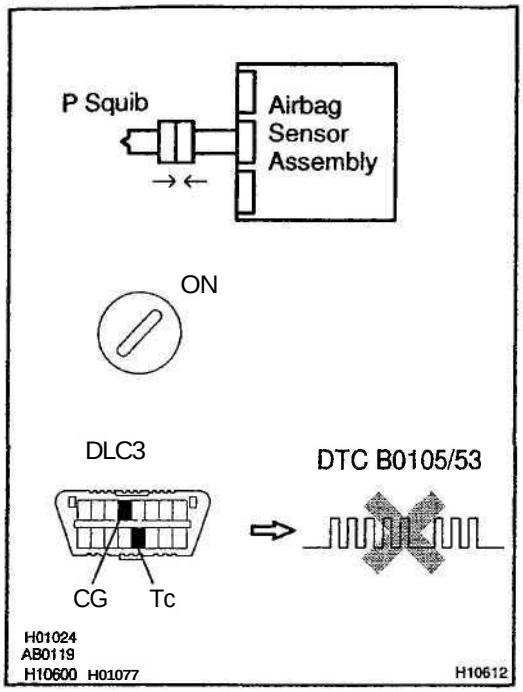

PREPARATION:

(a) Turn the ignition switch to LOCK.
(b) Disconnect negative (-) terminal cable from the battery, and wait at least for 90 seconds.
(c) Connect the front passenger airbag assembly connector.
(d) Connect negative (-) terminal cable to the battery, and wait at least for 2 seconds.

CHECK:

(a) Turn the ignition switch to LOOK, and wait at least for 20 seconds.
(b) Turn the ignition switch to ON, and wait at least for 20 seconds.
(c) Clear the DTC stored in memory (See page DI–326).
(d) Turn the ignition switch to LOCK, and wait at least for 20 seconds.
(e) Turn the ignition switch to ON, and wait at least for 20 seconds.
(f) Check the DTC (See page DI–326).

OK:

DTC B0105/53 is not output.

HINT:

Codes other than code B0105/53 may be output at this time, but they are not relevant to this check.

NG → **Replace front passenger airbag assembly.**

OK

From the results of the above inspection, the malfunctioning part can now be considered normal. To make sure of this, use the simulation method to check.

DTC	B0106/54	Open in P Squib Circuit

CIRCUIT DESCRIPTION

The P squib circuit consists of the airbag sensor assembly and front passenger airbag assembly.
It causes the SRS to deploy when the SRS deployment conditions are satisfied.
For details of the function of each component, see OPERATION on page RS–2.
DTC B0106/54 is recorded when an open is detected in the P squib circuit.

DTC No.	DTC Detecting Condition	Trouble Area
B0106/54	• Open circuit in P+ wire harness or P– wire harness of squib • P squib malfunction • Airbag sensor assembly malfunction	• Front passenger airbag assembly (P squib) • Airbag sensor assembly • Wire harness

WIRING DIAGRAM

See page DI–356.

INSPECTION PROCEDURE

1	Prepare for inspection (See step 1 on page DI–471).

2	Check P squib circuit.

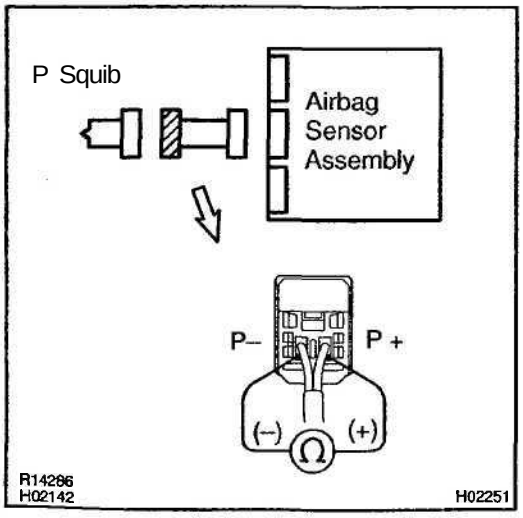

CHECK:

For the connector (on the front passenger airbag assembly side) between the front passenger airbag assembly and the airbag sensor assembly, measure the resistance between P+ and P-.

OK:

Resistance: Below 1 ft

NG → **Repair or replace harness or connector between front passenger airbag assembly and airbag sensor assembly.**

OK

3	Check airbag sensor assembly.

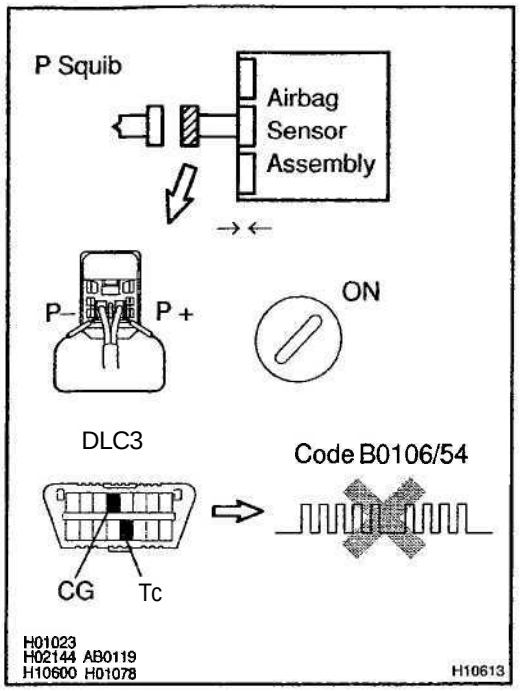

PREPARATION:

(a) Connect the connector to the airbag sensor assembly.
(b) Using a service wire, connect P+ and P- of the connector (on the front passenger airbag assembly side) between the front passenger airbag assembly and the airbag sensor assembly.
(c) Connect negative (-) terminal cable to the battery, and wait at least for 2 seconds.

CHECK:

(a) Turn the ignition switch to ON and wait at least for 20 seconds.
(b) Clear the DTC stored in memory (See page DI–326).
(c) Turn the ignition switch to LOCK, and wait at least for 20 seconds.
(d) Turn the ignition switch to ON, and wait at least for 20 seconds.
(e) Check the DTC (See page DI-326).

OK:

DTC B0106/54 is not output.

HINT:

Codes other than code B0106/54 may be output at this time, but they are not relevant to this check.

NG → **Replace airbag sensor assembly.**

OK

4	**Check P squib.**

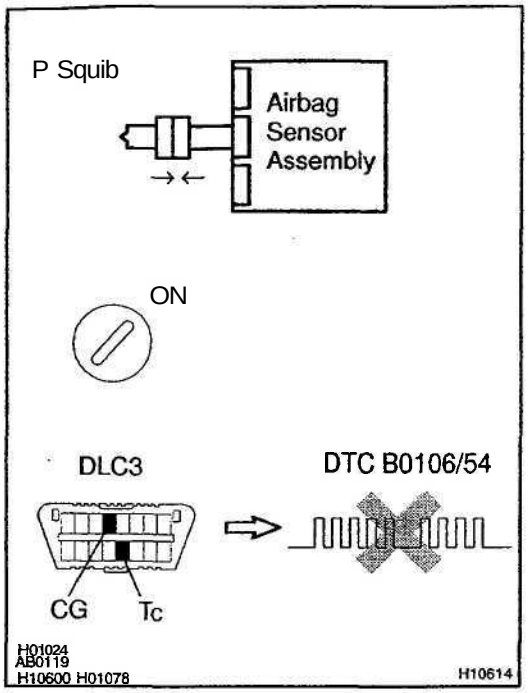

PREPARATION:

(a) Turn the ignition switch to LOCK.
(b) Disconnect negative (-) terminal cable from the battery, and wait at least for 90 seconds.
(c) Connect the front passenger airbag assembly connector.
(d) Connect negative (-) terminal cable to the battery, and wait at least for 2 seconds.

CHECK:

(a) Turn the ignition switch to ON, and wait at least for 20 seconds.
(b) Clear the DTC stored in memory (See page DI–326).
(c) Turn the ignition switch to LOCK, and wait at least for 20 seconds.
(d) Turn the ignition switch to ON, and wait at least for 20 seconds.
(e) Check the DTC (See page DI–326).

OK:

DTC B0106/54 is not output.

HINT:

Codes other than code B0106/54 may be output at this time, but they are not relevant to this check.

NG	**Replace front passenger airbag assembly.**

OK

From the results of the above inspection, the malfunctioning part can now be considered normal. To make sure of this, use the simulation method to check.

DTC	B0107/51	Short in P Squib Circuit (to Ground)

CIRCUIT DESCRIPTION

The P squib circuit consists of the airbag sensor assembly and front passenger airbag assembly.
It causes the SRS to deploy when the SRS deployment conditions are satisfied.
For details of the function of each component, see OPERATION on page RS–2.
DTC B0107/51 is recorded when ground short is detected in the P squib circuit.

DTC No.	DTC Detecting Condition	Trouble Area
B0107/51	• Short circuit in P squib wire harness (to ground) • P squib malfunction • Airbag sensor assembly malfunction	• Front passenger airbag assembly (P squib) • Airbag sensor assembly • Wire harness

WIRING DIAGRAM

See page DI–356.

INSPECTION PROCEDURE

1	**Prepare for inspection (See step 1 on page DI–471).**

2	**Check P squib circuit.**

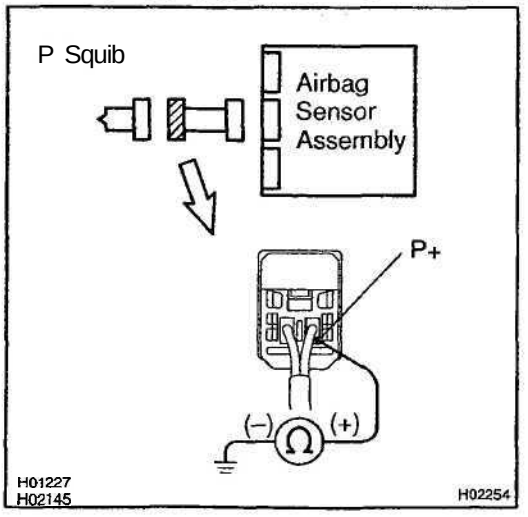

CHECK:

For the connector (on the front passenger airbag assembly side) between the front passenger airbag assembly and the airbag sensor assembly, measure the resistance between P+ and body ground.

OK:

Resistance: 1 MΩ or Higher

NG → **Repair or replace harness or connector between front passenger airbag assembly and airbag sensor assembly.**

OK

3	Check airbag sensor assembly.

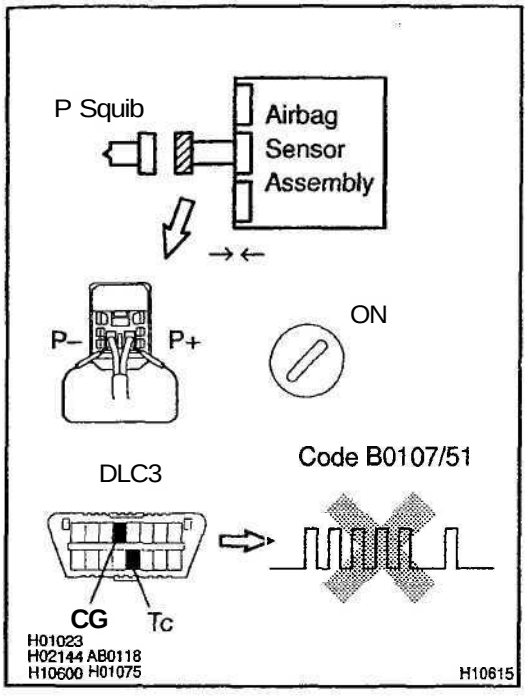

PREPARATION:

(a) Connect the connector to the airbag sensor assembly.
(b) Using a service wire, connect P+ and P- of the connector (on the front passenger airbag assembly side) between the front passenger airbag assembly and the airbag sensor assembly.
(c) Connect negative (-) terminal cable to the battery, and wait at least for 2 seconds.

CHECK:

(a) Turn the ignition switch to ON and wait at least for 20 seconds.
(b) Clear the DTC stored in memory (See step 5 on page DI–326).
(c) Turn the ignition switch to LOCK, and wait at least for 20 seconds.
(d) Turn the ignition switch to ON, and wait at least for 20 seconds.
(e) Check the DTC (See page DI-326).

OK:

DTC B0107/51 is not output.

HINT:

Codes other than code B0107/51 may be output at this time, but they are not relevant to this check.

NG → **Replace airbag sensor assembly.**

OK

4	Check P squib.

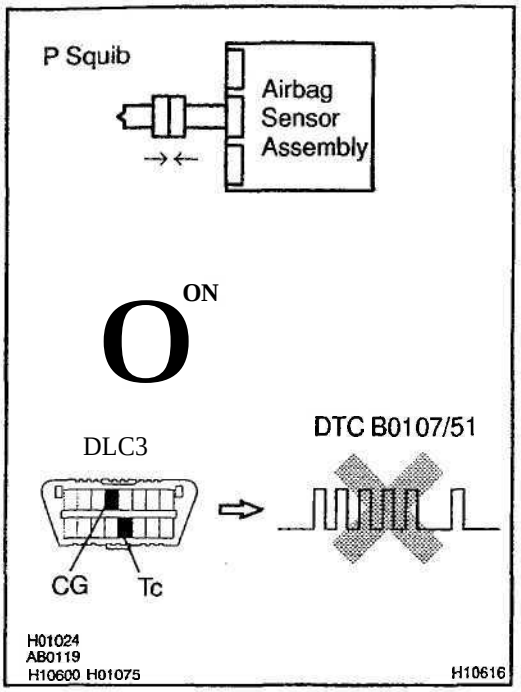

PREPARATION:

(a) Turn the ignition switch to LOCK.
(b) Disconnect negative (-) terminal cable from the battery, and wait at least for 90 seconds.
(c) Connect the front passenger airbag assembly connector.
(d) Connect negative (-) terminal cable to the battery, and wait at least for 2 seconds.

CHECK:

(a) Turn the ignition switch to ON, and wait at least for 20 seconds.
(b) Clear the DTC stored in memory (See step 5 on page DI–326).
(c) Turn the ignition switch to LOCK, and wait at least for 20 seconds.
(d) Turn the ignition switch to ON, and wait at least for 20 seconds.
(e) Check the DTC (See page DI-326).

OK:

DTC B0107/51 is not output.

HINT:

Codes other than code B0107/51 may be output at this time, but they are not relevant to this check.

NG → **Replace front passenger airbag assembly.**

OK

From the results of the above inspection, the malfunctioning part can now be considered normal. To make sure of this, use the simulation method to check. If the malfunctioning part can not be detected by the simulation method, replace all SRS components including the wire harness.

DTC	B0108/52	Short in P Squib Circuit (to B+)

CIRCUIT DESCRIPTION

The P squib circuit consists of the airbag sensor assembly and front passenger airbag assembly.
It causes the SRS to deploy when the SRS deployment conditions are satisfied.
For details of the function of each component, see OPERATION on page RS–2.
DTC B0108/52 is recorded when a B+ short is detected in the P squib circuit.

DTC No.	DTC Detecting Condition	Trouble Area
B0108/52	• Short circuit in P squib wire harness (to B+) • P squib malfunction • Airbag sensor assembly malfunction	• Front passenger airbag assembly (P squib) • Airbag sensor assembly • Wire harness

WIRING DIAGRAM

See page DI–356.

INSPECTION PROCEDURE

1	Prepare for inspection (See step 1 on page DI–471).

2	Check P squib circuit.

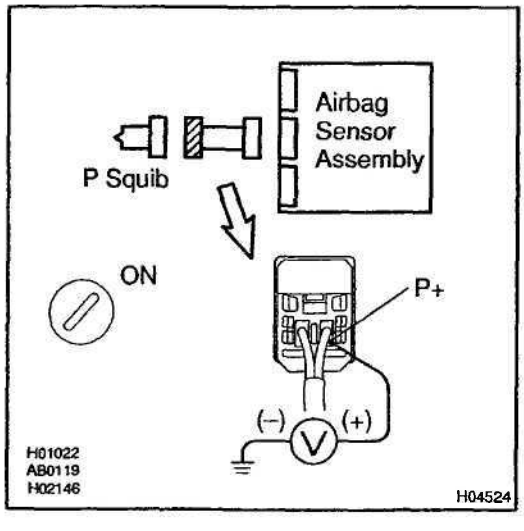

CHECK:

(a) Turn the ignition switch to ON.

(b) For the connector (on the front passenger airbag assembly side) between the front passenger airbag assembly and the airbag sensor assembly, measure the voltage between the P+ and body ground.

OK:

Voltage: 0 V

NG → **Repair or replace harness or connector between front passenger airbag assembly and airbag sensor assembly.**

OK

3	Check airbag sensor assembly.

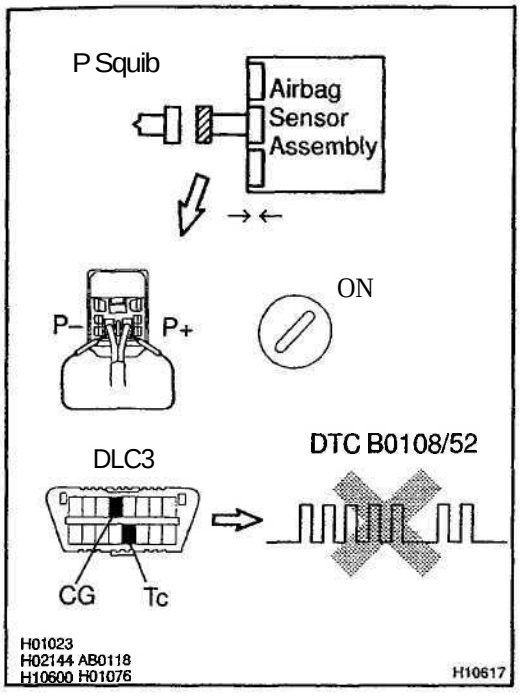

PREPARATION:

(a) Connect the connector to the airbag sensor assembly.
(b) Using a service wire, connect P+ and P- of the connector (on the front passenger airbag assembly side) between the front passenger airbag assembly and the airbag sensor assembly.
(c) Connect negative (-) terminal cable to the battery, and wait at least for 2 seconds.

CHECK:

(a) Turn the ignition switch to ON and wait at least for 20 seconds.
(b) Clear the DTC stored in memory (See step 5 on page DI–326).
(c) Turn the ignition switch to LOCK, and wait at least for 20 seconds.
(d) Turn the ignition switch to ON, and wait at least for 20 seconds.
(e) Check the DTC (See page DI–326).

OK:

DTC B0108/52 is not output.

HINT:
Codes other than code B0108/52 may be output at this time, but they are not relevant to this check.

NG	Replace airbag sensor assembly.

OK

4	Check P squib.

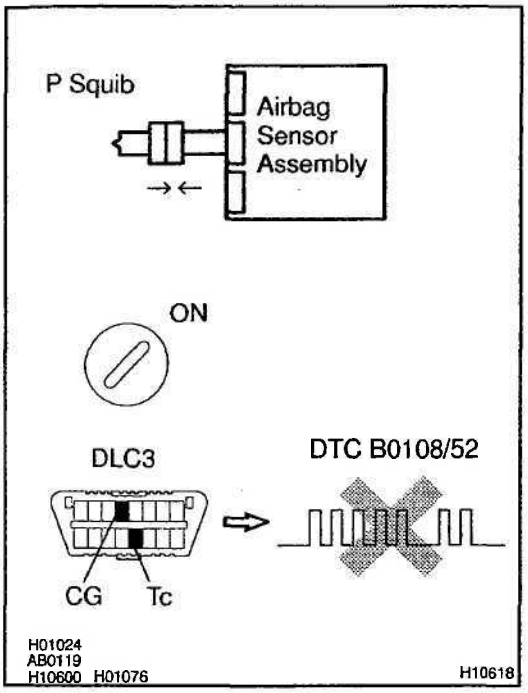

PREPARATION:

(a) Turn the ignition switch to LOCK.
(b) Disconnect negative (-) terminal cable from the battery, and wait at least for 90 seconds.
(c) Connect the front passenger airbag assembly connector.
(d) Connect negative (-) terminal cable to the battery, and wait at least for 2 seconds.

CHECK:

(a) Turn the ignition switch to ON, and wait at least for 20 seconds.
(b) Clear the DTC stored in memory (See step 5 on page DI–326).
(c) Turn the ignition switch to LOCK, and wait at least for 20 seconds.
(d) Turn the ignition switch to ON, and wait at least for 20 seconds.
(e) Check the DTC (See page DI-326).

OK:

DTC B0108/52 is not output.

HINT:

Codes other than code B0108/52 may be output at this time, but they are not relevant to this check.

NG → **Replace front passenger airbag assembly.**

OK

From the results of the above inspection, the malfunctioning part can now be considered normal. To make sure of this, use the simulation method to check. If the malfunctioning part can not be detected by the simulation method, replace all SRS components including the wire harness.

D16PB–01

DTC	B0110/43	Short in Side Squib (RH) Circuit

CIRCUIT DESCRIPTION

The side squib (RH) circuit consists of the airbag sensor assembly and side airbag assembly (RH).
It causes the SRS to deploy when the SRS deployment conditions are satisfied.
For details of the function of each component, see OPERATION on page RS–2.
DTC B0110/43 is recorded when a short is detected in the side squib (RH) circuit.

DTC No.	DTC Detecting Condition	Trouble Area
B0110/43	• Short circuit between FR+ wire harness and FR- wire harness of squib • Side squib (RH) malfunction • Airbag sensor assembly malfunction	• Side airbag assembly (RH) • Airbag sensor assembly • Wire harness

WIRING DIAGRAM

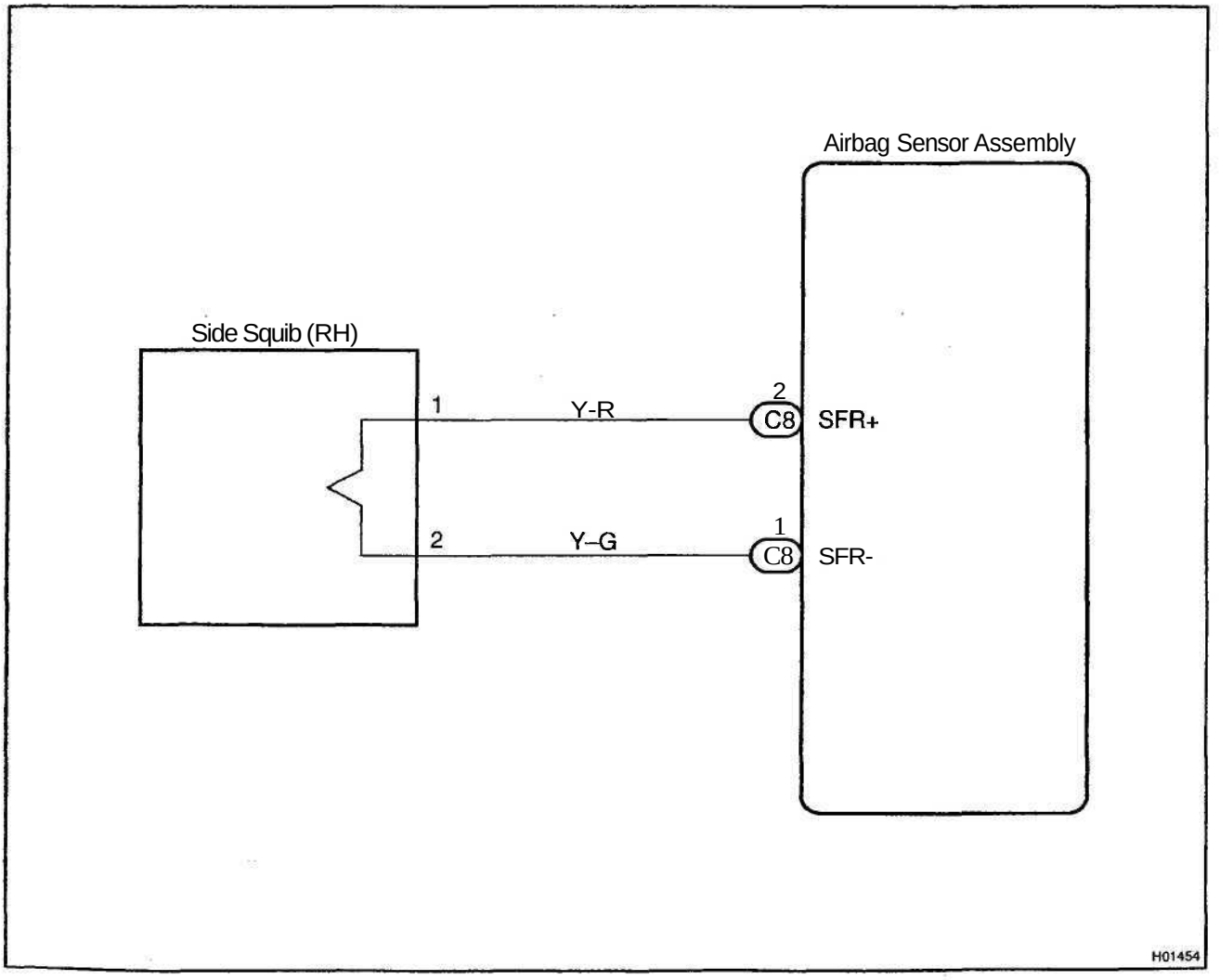

INSPECTION PROCEDURE

1	Prepare for inspection (See step 1 on page DI–471).

2	Check side squib (RH) circuit.

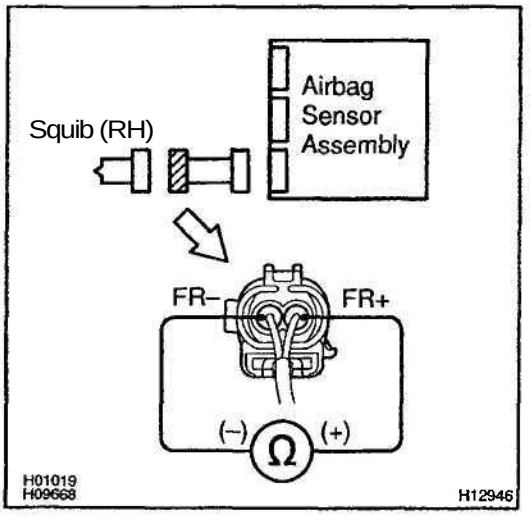

PREPARATION:

Release the airbag activation prevention mechanism of the connector (on the airbag sensor assembly side) between the airbag sensor assembly and the side airbag assembly (RH) (See page DI–326).

CHECK:

For the connector (on the side airbag assembly side) between the side airbag assembly (RH) and the airbag sensor assembly, measure the resistance between FR+ and FR-.

OK:

Resistance: 1 MΩ or Higher

NG	Repair or replace harness or connector between side airbag assembly (RH) and airbag sensor assembly.

OK

3	Check airbag sensor assembly.

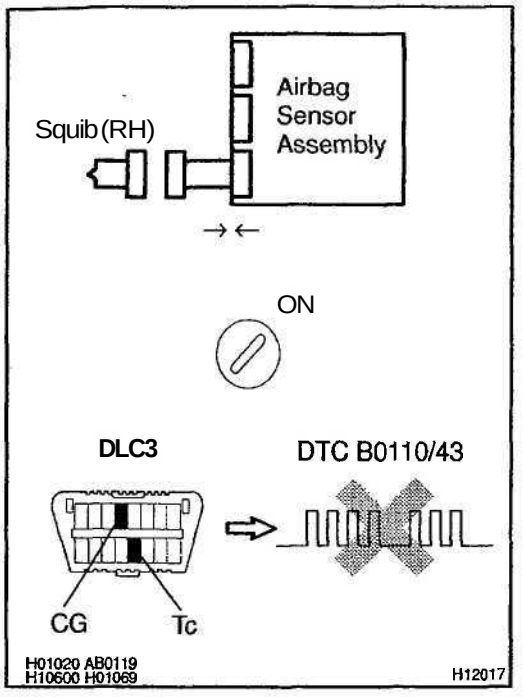

PREPARATION:

(a) Connect the connector to the airbag sensor assembly.
(b) Connect negative (-) terminal cable to the battery, and wait at least for 2 seconds.

CHECK:

(a) Turn the ignition switch to ON and wait at least for 20 seconds.
(b) Clear the DTC stored in memory (See page DI–326).
(c) Turn the ignition switch to LOCK, and wait at least for 20 seconds.
(d) Turn the ignition switch or ON, and wait at least for 20 seconds.
(e) Check the DTC (See page DI-326).

OK:

DTC B0110/43 is not output.

HINT:

Codes other than code B0110/43 may be output at this time, but they are not relevant to this check.

NG → **Replace airbag sensor assembly.**

OK

4	Check side squib (RH).

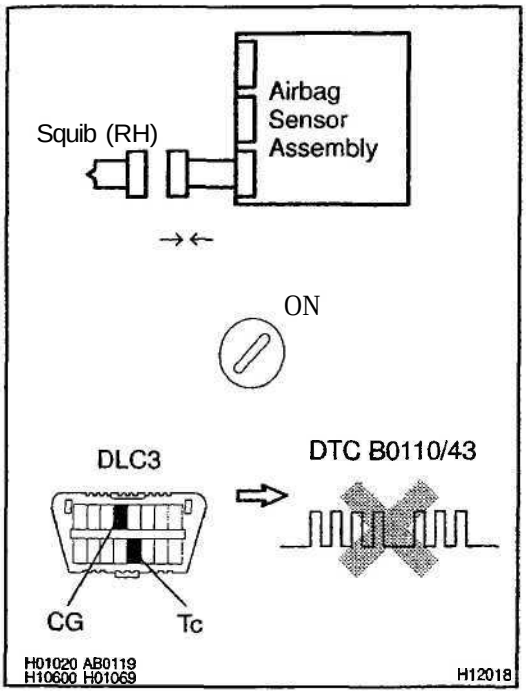

PREPARATION:

(a) Turn the ignition switch to LOCK.
(b) Disconnect negative (-) terminal cable from the battery, and wait at least for 90 seconds.
(c) Connect the side airbag assembly (RH) connector.
(d) Connect negative (-) terminal cable to the battery, and wait at least for 2 seconds.

CHECK:

(a) Turn the ignition switch to LOOK, and wait at least for 20 second.
(b) Turn the ignition switch to ON, and wait at least for 20 seconds.
(c) Clear the DTC stored in memory (See page DI–326).
(d) Turn the ignition switch to LOCK, and wait at least for 20 seconds.
(e) Turn the ignition switch to ON, and wait at least for 20 seconds.
(f) Check the DTC (See page DI-326).

OK:

DTC B0110/43 is not output.

HINT:

Codes other than code B0110/43 may be output at this time, but they are not relevant to this check.

NG → **Replace side airbag assembly (RH).**

OK

From the results of the above inspection, the malfunctioning part can now be considered normal. To make sure of this, use the simulation method to check.

DI6PC-01

DTC	B0111/44	Open in Side Squib (RH) Circuit

CIRCUIT DESCRIPTION

The side squib (RH) circuit consists of the airbag sensor assembly and side airbag assembly (RH).
It causes the SRS to deploy when the SRS deployment conditions are satisfied.
For details of the function of each component, see OPERATION on page RS–2.
DTC B0111/44 is recorded when an open is detected in the side squib (RH) circuit.

DTC No.	DTC Detecting Condition	Trouble Area
B0111/44	•Open circuit in FR+ wire harness or FR– wire harness of squib • Side squib (RH) malfunction • Airbag sensor assembly malfunction	• Side airbag assembly (RH) • Airbag sensor assembly • Wire harness

WIRING DIAGRAM

See page DI–369.

INSPECTION PROCEDURE

1	**Prepare for inspection (See step 1 on page DI–471).**

2	Check front side squib (RH) circuit.

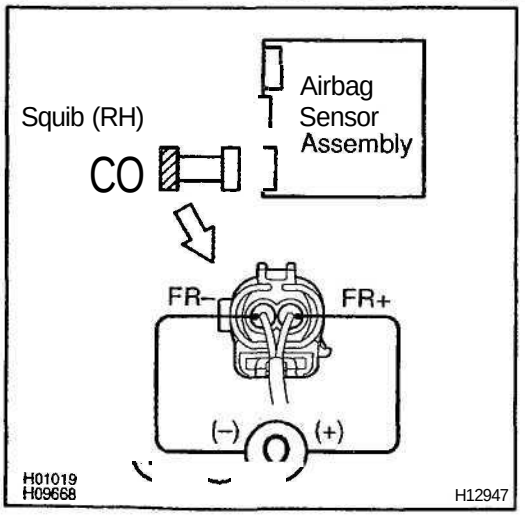

CHECK:
For the connector (on the front side airbag assembly side) between the front side airbag assembly (RH) and the airbag sensor assembly, measure the resistance between FR+ and FR-.
OK:
Resistance: Below 1 Ω

NG → Repair or replace harness or connector between side airbag assembly (RH) and airbag sensor assembly.

OK

3	Check airbag sensor assembly.

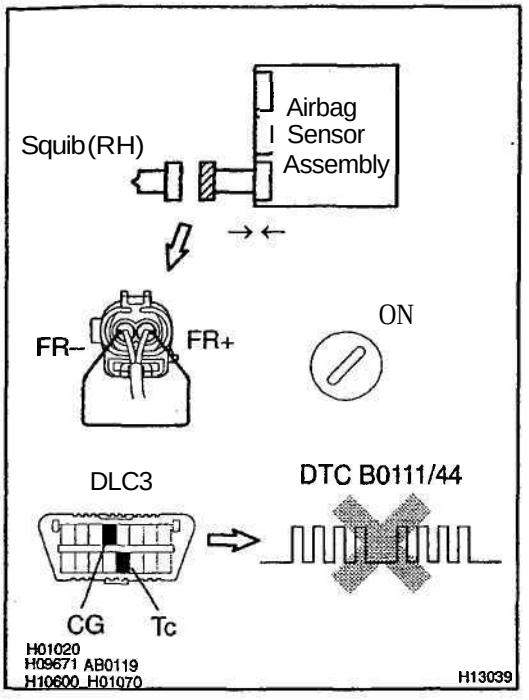

PREPARATION:

(a) Connect the connector to the airbag sensor assembly.
(b) Using a service wire, connect FR+ and FR- of the connector (on the side airbag assembly side) between the side airbag assembly (RH) and the airbag sensor assembly.
(c) Connect negative (-) terminal cable to the battery, and wait at least for 2 seconds.

CHECK:

(a) Turn the ignition switch to ON and wait at least for 20 seconds.
(b) Clear the DTC stored in memory (See page DI–326).
(c) Turn the ignition switch to LOCK, and wait at least for 20 seconds.
(d) Turn the ignition switch to ON, and wait at least for 20 seconds.
(e) Check the DTC (See page DI-326).

OK:

DTC B0111/44 is not output.

HINT:

Codes other than code B0111/44 may be output at this time, but they are not relevant to this check.

NG → **Replace airbag sensor assembly.**

OK

4	Check side squib (RH).

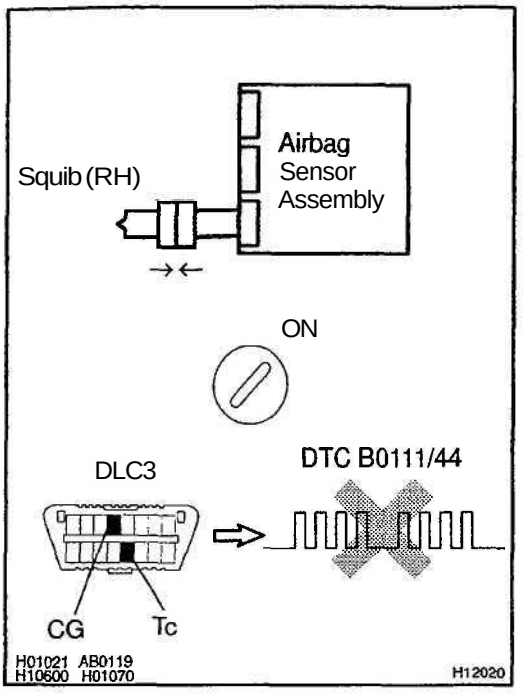

PREPARATION:

(a) Turn the ignition switch to LOCK.
(b) Disconnect negative (-) terminal cable from the battery, and wait at least for 90 seconds.
(c) Connect the front side airbag assembly (RH) connector.
(d) Connect negative (-) terminal cable to the battery, and wait at least for 2 seconds.

CHECK:

(a) Turn the ignition switch to ON, and wait at least for 20 seconds.
(b) Clear the DTC stored in memory (See page DI–326).
(c) Turn the ignition switch to LOCK, and wait at least for 20 seconds.
(d) Turn the ignition switch to or ON, and wait at least for 20 seconds.
(e) Check the DTC (See page DI-326).

OK:

DTC B0111/44 is not output.

HINT:

Codes other than code B0111/44 may be output at this time, but they are not relevant to this check.

NG	Replace side airbag assembly (RH).

OK

From the results of the above inspection, the malfunctioning part can now be considered normal. To make sure of this, use the simulation method to check.

DTC	B0112/41	Short in Side Squib (RH) Circuit (to Ground)

CIRCUIT DESCRIPTION

The side squib (RH) circuit consists of the airbag sensor assembly and side airbag assembly (RH).
It causes the SRS to deploy when the SRS deployment conditions are satisfied.
For details of the function of each component, see OPERATION on page RS–2.
DTC B0112/41 is recorded when ground short is detected in the side squib (RH) circuit.

DTC No.	DTC Detecting Condition	Trouble Area
B0112/41	• Short circuit in side squib (RH) wire harness (to ground) • Side squib (RH) malfunction • Airbag sensor assembly malfunction	• Side airbag assembly (RH) • Airbag sensor assembly • Wire harness

WIRING DIAGRAM

See page DI–369.

INSPECTION PROCEDURE

1	Prepare for inspection (See step 1 on page DM71).

2	Check side squib (RH) circuit.

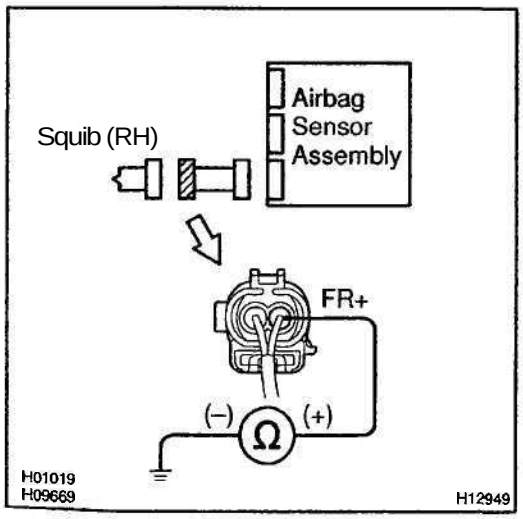

CHECK:

For the connector (on the side airbag assembly side) between the side airbag assembly (RH) and the airbag sensor assembly, measure the resistance between FR+ and body ground.

OK:

Resistance: 1 MΩ or Higher

NG → **Repair or replace harness or connector between side airbag assembly (RH) and airbag sensor assembly.**

OK

3	Check airbag sensor assembly.

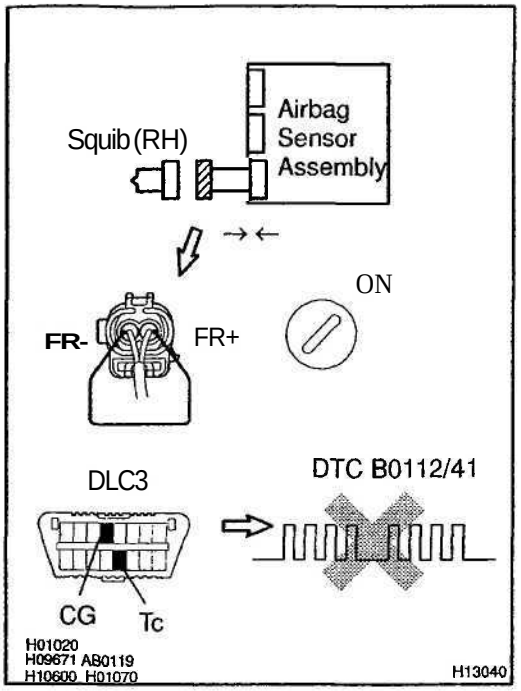

PREPARATION:

(a) Connect the connector to the airbag sensor assembly.
(b) Using a service wire, connect FR+ and FR- of the connector (on the side airbag assembly side) between the side airbag assembly (RH) and the airbag sensor assembly.
(c) Connect negative (-) terminal cable to the battery, and wait at least for 2 seconds.

CHECK:

(a) Turn the ignition switch to ON and wait at least for 20 seconds.
(b) Clear the DTC stored in memory (See step 5 on page DI–326).
(c) Turn the ignition switch to LOCK, and wait at least for 20 seconds.
(d) Turn the ignition switch to ON, and wait at least for 20 seconds.
(e) Check the DTC (See page DI-326).

OK:

DTC B0112/41 is not output.

HINT:

Codes other than code B0112/41 may be output at this time, but they are not relevant to this check.

NG → **Replace airbag sensor assembly.**

OK

4	Check side squib (RH).

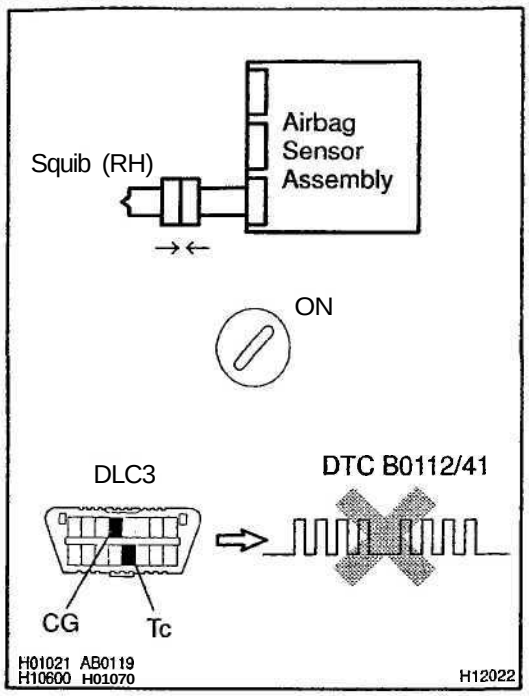

PREPARATION:

(a) Turn the ignition switch to LOCK.
(b) Disconnect negative (-) terminal cable from the battery, and wait at least for 90 seconds.
(c) Connect the side airbag assembly (RH) connector.
(d) Connect negative (-) terminal cable to the battery, and wait at least for 2 seconds.

CHECK:

(a) Turn the ignition switch to ON, and wait at least for 20 seconds.
(b) Clear the DTC stored in memory
(See step 5 on page DI-326).
(c) Turn the ignition switch to LOCK, and wait at least for 20 seconds.
(d) Turn the ignition switch to ON, and wait at least for 20 seconds.
(e) Check the DTC (See page DI-326).

OK:

DTC B0112/41 is not output.

HINT:

Codes other than code B0112/41 may be output at this time, but they are not relevant to this check.

NG → **Replace side airbag assembly (RH).**

OK

From the results of the above inspection, the malfunctioning part can now be considered normal. To make sure of this, use the simulation method to check. If the malfunctioning part can not be detected by the simulation method, replace all SRS components including the wire harness.

DTC	B0113/42	Short in Side Squib (RH) Circuit (to B+)

CIRCUIT DESCRIPTION

The side squib (RH) circuit consists of the airbag sensor assembly and side airbag assembly (RH).
It causes the SRS to deploy when the SRS deployment conditions are satisfied.
For details of the function of each component, see OPERATION on page RS–2.
DTC B0113/42 is recorded when a B+ short is detected in the side squib (RH) circuit.

DTC No.	DTC Detecting Condition	Trouble Area
B0113/42	• Short circuit in side squib (RH) wire harness (to B+) • Side squib (RH) malfunction • Airbag sensor assembly malfunction	• Side airbag assembly (RH) • Airbag sensor assembly • Wire harness

WIRING DIAGRAM

See page DI–369.

INSPECTION PROCEDURE

1	**Prepare for inspection (See step 1 on page DI–326).**

2	**Check side squib (RH) circuit.**

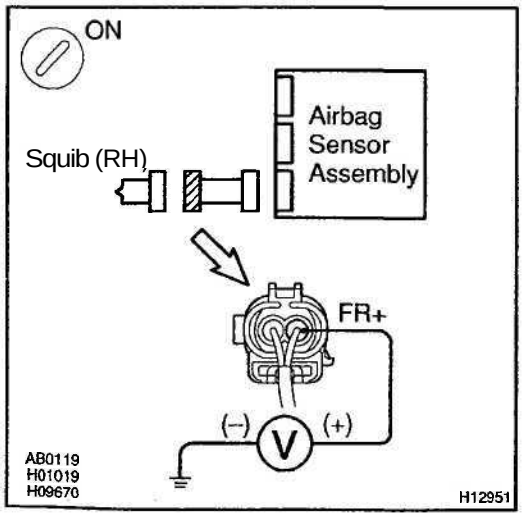

CHECK:

(a) Turn the ignition switch to ON.

(b) For the connector (on the airbag sensor assembly side) between the side airbag assembly (RH) and the airbag sensor assembly, measure the voltage between FR+ and body ground.

OK:

Voltage: 0 V

NG → **Repair or replace harness or connector between side airbag assembly (RH) and airbag sensor assembly.**

OK

3	Check airbag sensor assembly.

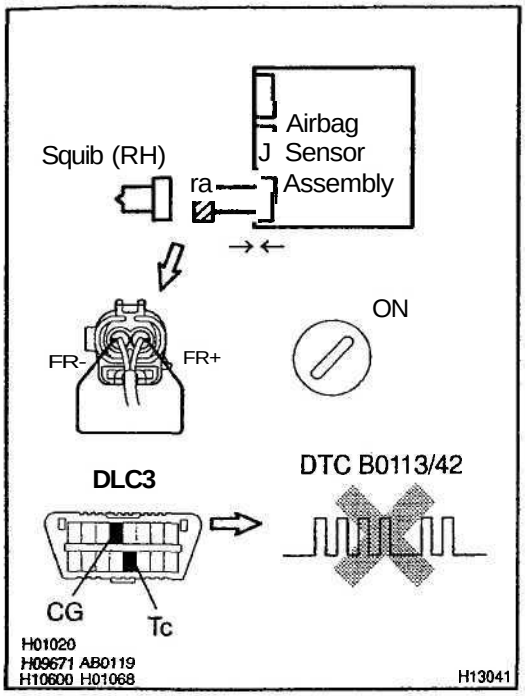

PREPARATION:

(a) Connect the connector to the airbag sensor assembly.
(b) Using a service wire, connect FR+ and FR- of the connector (on the front side airbag assembly side) between the front side airbag assembly (RH) and the airbag sensor assembly.
(c) Connect negative (-) terminal cable to the battery, and wait at least for 2 seconds.

CHECK:

(a) Turn the ignition switch to ON and wait at least for 20 seconds.
(b) Clear the DTC stored in memory (See step 5 on page DI-326).
(c) Turn the ignition switch to LOCK, and wait at least for 20 seconds.
(d) Turn the ignition switch to ON, and wait at least for 20 seconds.
(e) Check the DTC (See page DI-326).

OK:

DTC B0113/42 is not output.

HINT:

Codes other than code B0113/42 may be output at this time, but they are not relevant to this check.

NG	Replace airbag sensor assembly.

OK

4	Check side squib (RH).

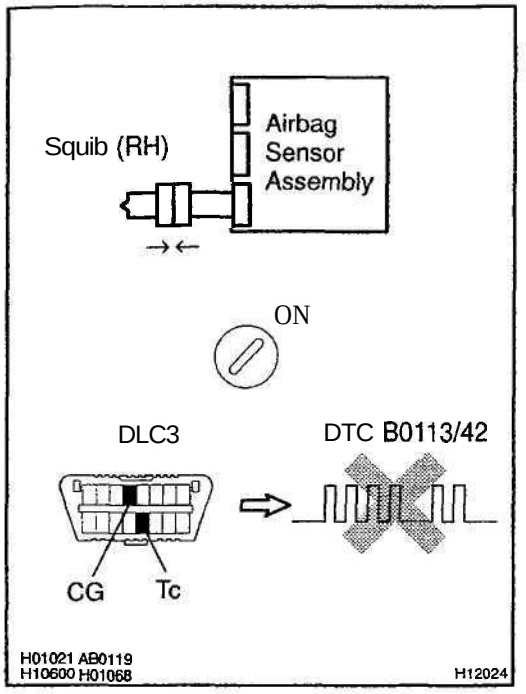

PREPARATION:

(a) Turn the ignition switch to LOCK.
(b) Disconnect negative (-) terminal cable from the battery, and wait at least for 90 seconds.
(c) Connect the front side airbag assembly (RH) connector.
(d) Connect negative (-) terminal cable to the battery, and wait at least for 2 seconds.

CHECK:

(a) Turn the ignition switch to ON, and wait at least for 20 seconds.
(b) Clear the DTC stored in memory (See step 5 on page DI–326).
(c) Turn the ignition switch to LOCK, and wait at least for 20 seconds.
(d) Turn the ignition switch to ON, and wait at least for 20 seconds.
(e) Check the DTC (See page DI-326).

OK:

DTC B0113/42 is not output.

HINT:

Codes other than code B0113/42 may be output at this time, but they are not relevant to this check.

NG → **Replace side airbag assembly (RH).**

OK

From the results of the above inspection, the malfunctioning part can now be considered normal. To make sure of this, use the simulation method to check. If the malfunctioning part can not be detected by the simulation method, replace all SRS components including the wire harness.

DTC	B0115/47	Short in Side Squib (LH) Circuit

CIRCUIT DESCRIPTION

The side squib (LH) circuit consists of the airbag sensor assembly and side airbag assembly (LH).
It causes the SRS to deploy when the SRS deployment conditions are satisfied.
For details of the function of each component, see OPERATION on page RS-2.
DTC B0115/47 is recorded when a short is detected in the side squib (LH) circuit.

DTC No.	DTC Detecting Condition	Trouble Area
B0115/47	• Short circuit between FL+ wire harness and FL- wire harness of squib • Side squib (LH) malfunction • Airbag sensor assembly malfunction	• Side airbag assembly (LH) • Airbag sensor assembly • Wire harness

WIRING DIAGRAM

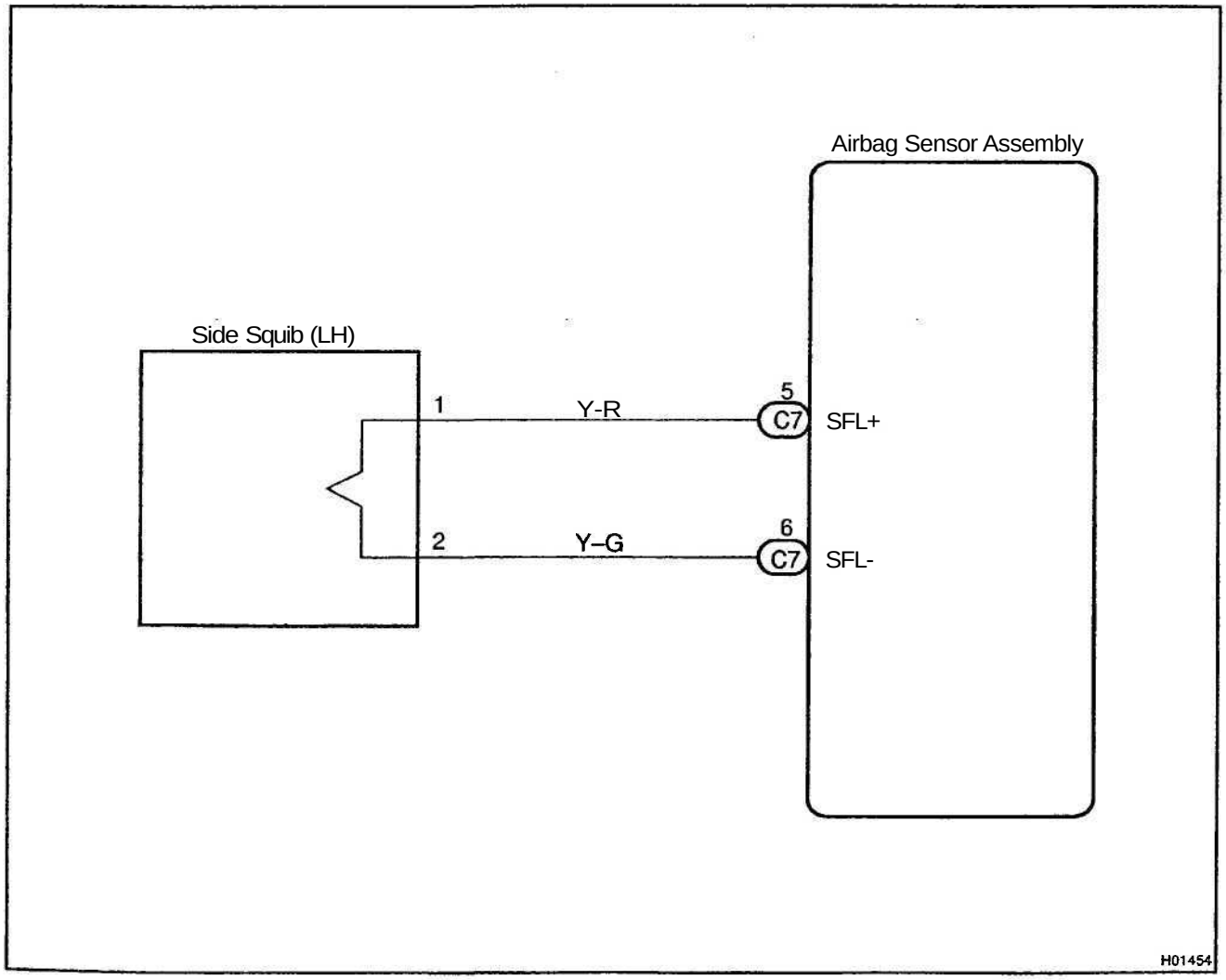

INSPECTION PROCEDURE

1	Prepare for inspection (See step 1 on page **DI–471**).

2	Check side squib (LH) circuit.

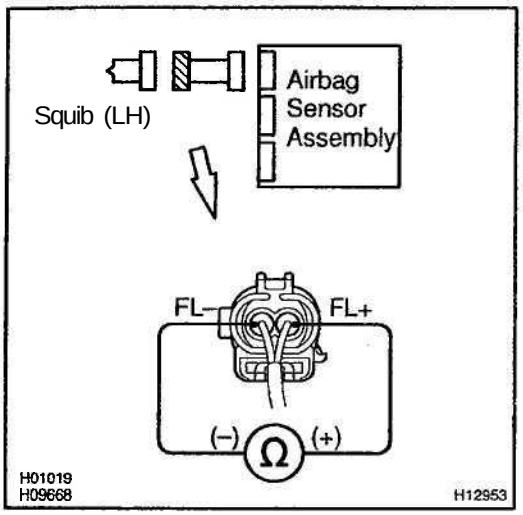

PREPARATION:

Release the airbag activation prevention mechanism of the connector (on the airbag sensor assembly side) between the airbag sensor assembly and the side airbag assembly (LH) (See page DI–326).

CHECK:

For the connector (on the side airbag assembly side) between the side airbag assembly (LH) and the airbag sensor assembly, measure the resistance between FL+ and FL-.

OK;

Resistance: 1 MΩ or Higher

NG → **Repair or replace harness or connector between side airbag assembly (LH) and airbag sensor assembly.**

OK

3	**Check airbag sensor assembly.**

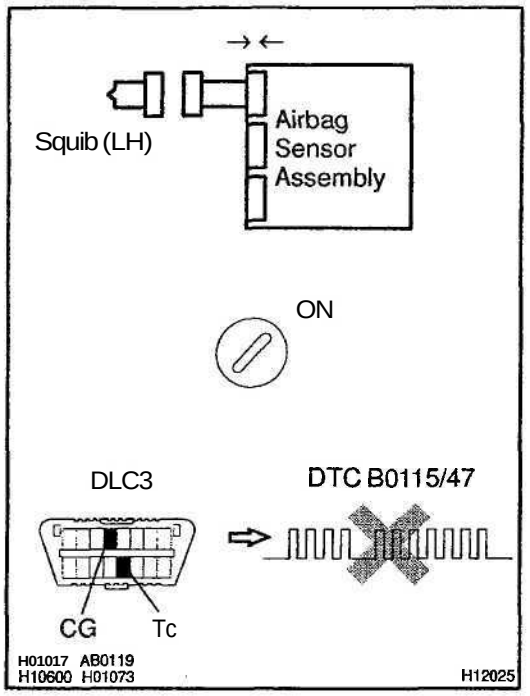

PREPARATION:

(a) Connect the connector to the airbag sensor assembly.
(b) Connect negative (-) terminal cable to the battery, and wait at least for 2 seconds.

CHECK:

(a) Turn the ignition switch to ON and wait at least for 20 seconds.
(b) Clear the DTC stored in memory (See page DI–326).
(c) Turn the ignition switch to LOCK, and wait at least for 20 seconds.
(d) Turn the ignition switch or ON, and wait at least for 20 seconds.
(e) Check the DTC (See page DI-326).

OK:

DTC B0115/47 is not output.

HINT:

Codes other than code B0115/47 may be output at this time, but they are not relevant to this check.

NG → **Replace airbag sensor assembly.**

OK

4	**Check side squib (LH).**

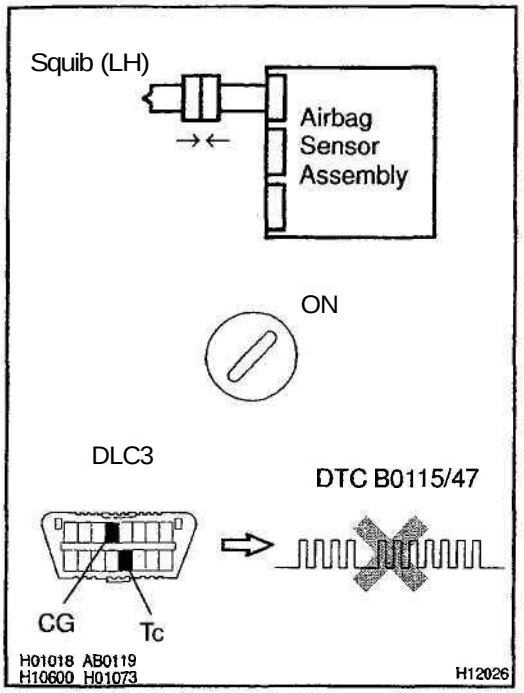

PREPARATION:

(a) Turn the ignition switch to LOCK.
(b) Disconnect negative (-) terminal cable from the battery, and wait at least for 90 seconds.
(c) Connect the front side airbag assembly (LH) connector.
(d) Connect negative (-) terminal cable to the battery, and wait at least for 2 seconds.

CHECK:

(a) Turn the ignition switch to LOOK, and wait at least for 20 second.
(b) Turn the ignition switch to ON, and wait at least for 20 seconds.
(c) Clear the DTC stored in memory (See page DI–326).
(d) Turn the ignition switch to LOCK, and wait at least for 20 seconds.
(e) Turn the ignition switch to ON, and wait at least for 20 seconds.
(f) Check the DTC (See page DI-326).

OK:

DTC B0115/47 is not output.

HINT:

Codes other than code B0115/47 may be output at this time, but they are not relevant to this check.

NG → **Replace side airbag assembly (LH).**

OK

From the results of the above inspection, the malfunctioning part can now be considered normal. To make sure of this, use the simulation method to check.

DTC	B0116/48	Open in Side Squib (LH) Circuit

CIRCUIT DESCRIPTION

The side squib (LH) circuit consists of the airbag sensor assembly and side airbag assembly (LH).
It causes the SRS to deploy when the SRS deployment conditions are satisfied.
For details of the function of each component, see OPERATION on page RS–2.
DTC B0116/48 is recorded when an open is detected in the side squib (LH) circuit.

DTC No.	DTC Detecting Condition	Trouble Area
B0116/48	• Open circuit in FL+ wire harness or FL- wire harness of squib • Side squib (LH) malfunction • Airbag sensor assembly malfunction	• Side airbag assembly (LH) • Airbag sensor assembly • Wire harness

WIRING DIAGRAM

See page DI–382.

INSPECTION PROCEDURE

1	**Prepare for inspection. (See step 1 on page DI–471)**

2	Check side squib (LH) circuit.

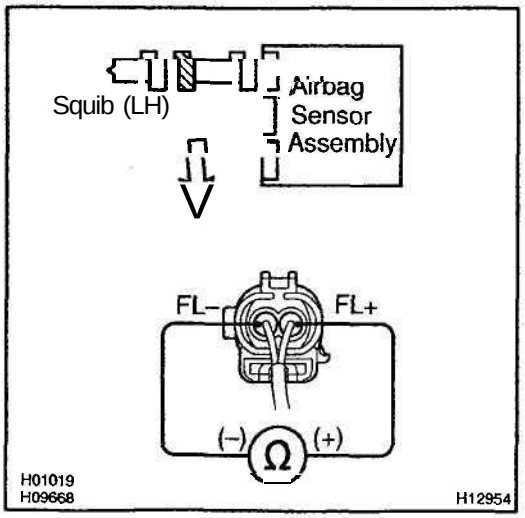

CHECK:
For the connector (on the front side airbag assembly side) between the front side airbag assembly (LH) and the airbag sensor assembly, measure the resistance between FL+ and FL-.
OK:
Resistance: Below 1 Ω

NG → Repair or replace harness or connector between side airbag assembly (LH) and airbag sensor assembly.

OK

3	Check airbag sensor assembly.

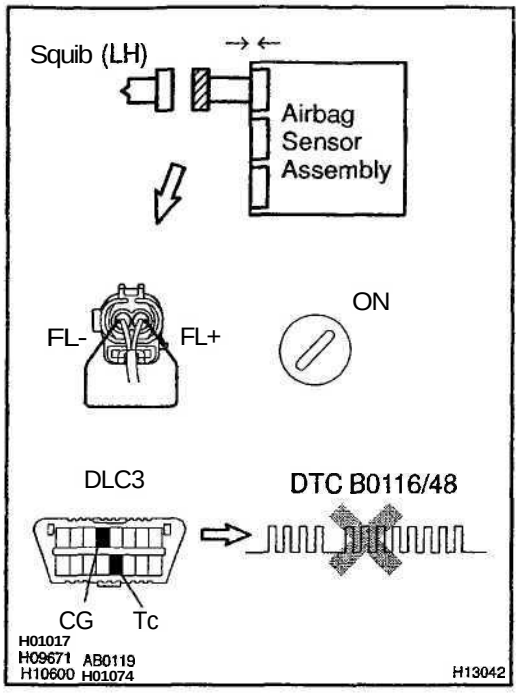

PREPARATION:

(a) Connect the connector to the airbag sensor assembly.
(b) Using a service wire, connect FL+ and FL- of the connector (on the side airbag assembly side) between the side airbag assembly (LH) and the airbag sensor assembly.
(c) Connect negative (-) terminal cable to the battery, and wait at least 2 seconds.

CHECK:

(a) Turn the ignition switch to ON and wait at least for 20 seconds.
(b) Clear the DTC stored in memory (See page DI–326).
(c) Turn the ignition switch to LOCK, and wait at least for 20 seconds.
(d) Turn the ignition switch to ON, and wait at least for 20 seconds.
(e) Check the DTC (See page DI-326).

OK:

DTC B0116/48 is not output.

HINT:

Codes other than code B0116/48 may be output at this time, but they are not relevant to this check.

NG → **Replace side airbag sensor assembly.**

OK

4	Check side squib (LH).

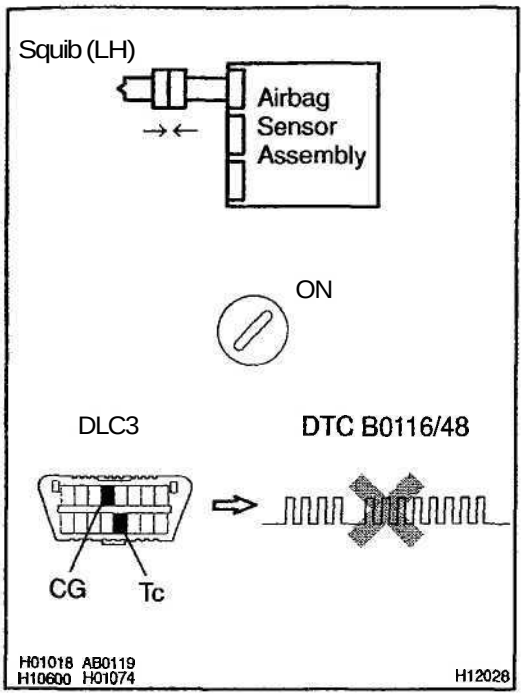

PREPARATION:

(a) Turn the ignition switch to LOCK.
(b) Disconnect negative (-) terminal cable from the battery, and wait at least for 90 seconds.
(c) Connect the side airbag assembly (LH) connector.
(d) Connect negative (-) terminal cable to the battery, and wait at least for *2* seconds.

CHECK:

(a) Turn the ignition switch to ON, and wait at least for 20 seconds.
(b) Clear the DTC stored in memory (See page DI-326).
(c) Turn the ignition switch to LOCK, and wait at least for 20 seconds.
(d) Turn the ignition switch to ON, and wait at least for 20 seconds.
(e) Check the DTC (See page DI-326).

OK:

DTC B0116/48 is not output.

HINT:

Codes other than code B0116/48 may be output at this time, but they are not relevant to this check.

NG → **Replace side airbag assembly (LH).**

OK

From the results of the above inspection, the malfunctioning part can now be considered normal. To make sure of this, use the simulation method to check.

DTC	B0117/45	Short in Side Squib (LH) Circuit (to Ground)

CIRCUIT DESCRIPTION

The side squib (LH) circuit consists of the airbag sensor assembly and side airbag assembly (LH).
It causes the SRS to deploy when the SRS deployment conditions are satisfied.
For details of the function of each component, see OPERATION on page RS–2.
DTC B0117/45 is recorded when ground short is detected in the side squib (LH) circuit.

DTC No.	DTC Detecting Condition	Trouble Area
B0117/45	• Short circuit in side squib (LH) wire harness (to ground) • Side squib (LH) malfunction • Airbag sensor assembly malfunction	• Side airbag assembly (LH) • Airbag sensor assembly • Wire harness

WIRING DIAGRAM

See page DI–382.

INSPECTION PROCEDURE

1	Prepare for inspection (See step 1 on page DI–471).

2	Check side squib (LH) circuit.

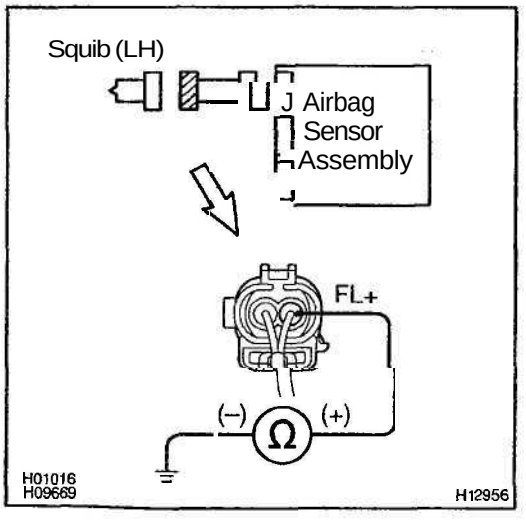

CHECK:
For the connector (on the side airbag assembly side) between the side airbag assembly (LH) and the airbag sensor assembly, measure the resistance between FL+ and body ground.
OK:
Resistance: 1 MΩ or Higher

NG → Repair or replace harness or connector between side airbag assembly (LH) and airbag sensor assembly.

OK

3	Check airbag sensor assembly.

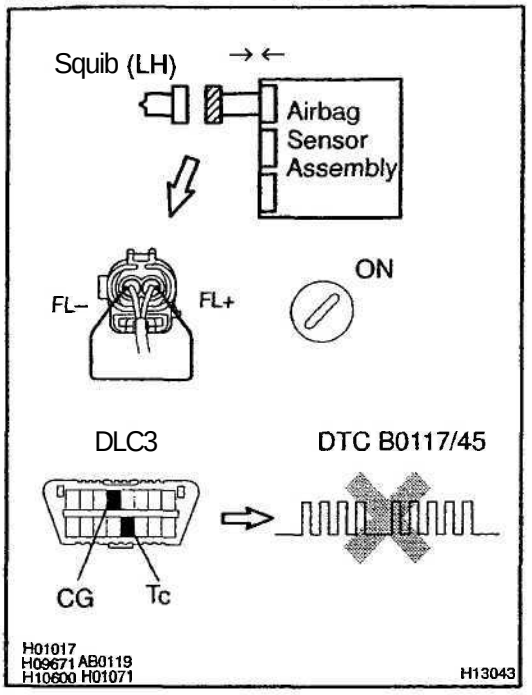

PREPARATION:

(a) Connect the connector to the airbag sensor assembly.
(b) Using a service wire, connect FL+ and FL- of the connector (on the side airbag assembly side) between the side airbag assembly (LH) and the airbag sensor assembly.
(c) Connect negative (-) terminal cable to the battery, and wait at least for 2 seconds.

CHECK:

(a) Turn the ignition switch to ON and wait at least for 20 seconds.
(b) Clear the DTC stored in memory (See step 5 on page DI-326).
(c) Turn the ignition switch to LOCK, and wait at least for 20 seconds.
(d) Turn the ignition switch to ON, and wait at least for 20 seconds.
(e) Check the DTC (See page DI-326).

OK;

DTC B0117/45 is not output.

HINT:

Codes other than code B0117/45 may be output at this time, but they are not relevant to this check.

NG → **Replace airbag sensor assembly.**

OK

4	Check side squib (LH).

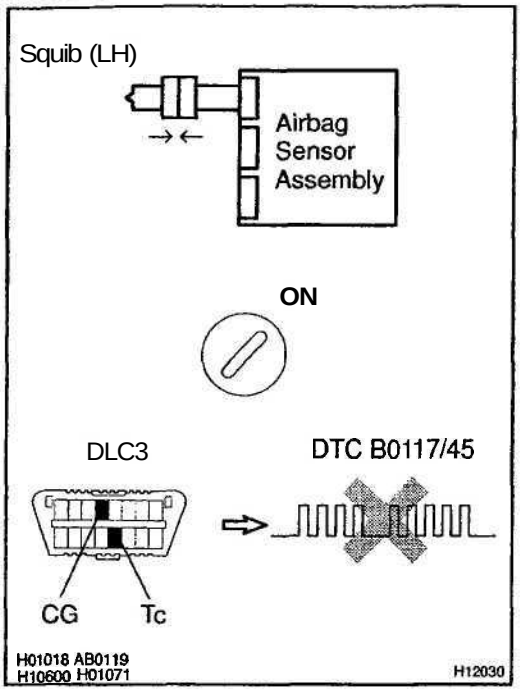

PREPARATION:

(a) Turn the ignition switch to LOCK.
(b) Disconnect negative (-) terminal cable from the battery, and wait at least for 90 seconds.
(c) Connect the front side airbag assembly (LH) connector.
(d) Connect negative (-) terminal cable to the battery, and wait at least for 2 seconds.

CHECK:

(a) Turn the ignition switch to ON, and wait at least for 20 seconds.
(b) Clear the DTC stored in memory (See step 5 on page DI-326).
(c) Turn the ignition switch to LOCK, and wait at least for 20 seconds.
(d) Turn the ignition switch to ON, and wait at least for 20 seconds.
(e) Check the DTC (See page DI-326).

OK:

DTC B0117/45 is not output.

HINT:

Codes other than code B0117/45 may be output at this time, but they are not relevant to this check.

NG → **Replace front side airbag assembly (LH).**

OK

From the results of the above inspection, the malfunctioning part can now be considered normal. To make sure of this, use the simulation method to check. If the malfunctioning part can not be detected by the simulation method, replace all SRS components including the wire harness.

DTC	B0118/46	Short in Side Squib (LH) Circuit (to B+)

CIRCUIT DESCRIPTION

The side squib (LH) circuit consists of the airbag sensor assembly and side airbag assembly (LH).
It causes the SRS to deploy when the SRS deployment conditions are satisfied.
For details of the function of each component, see OPERATION on page RS–2.
DTC B0118/46 is recorded when a B+ short is detected in the side squib (LH) circuit.

DTC No.	DTC Detecting Condition	Trouble Area
B0118/46	• Short circuit in side squib (LH) wire harness (to B+) • Side squib (LH) malfunction • Airbag sensor assembly malfunction	• Side airbag assembly (LH) • Airbag sensor assembly • Wire harness

WIRING DIAGRAM

See page DI–382.

INSPECTION PROCEDURE

1	Prepare for inspection (See step 1 on page DI–471).

2	Check side squib (LH) circuit.

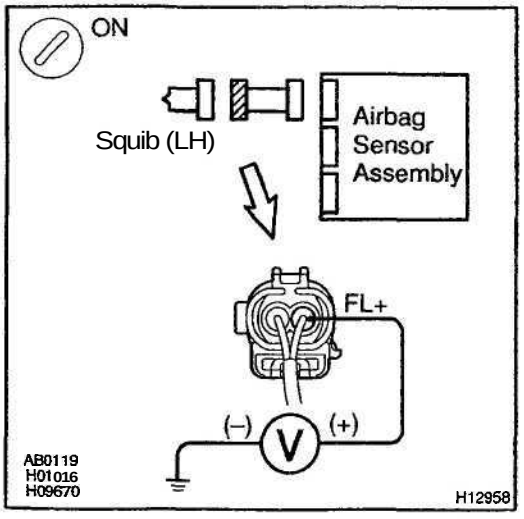

CHECK:

(a) Turn the ignition switch to ON.

(b) For the connector (on the side airbag assembly side) between the side airbag assembly (LH) and the airbag sensor assembly, measure the voltage between FL+ and body ground.

OK:

Voltage: 0 V

NG → **Repair or replace harness or connector between side airbag assembly (LH) and airbag sensor assembly.**

OK

3	Check airbag sensor assembly.

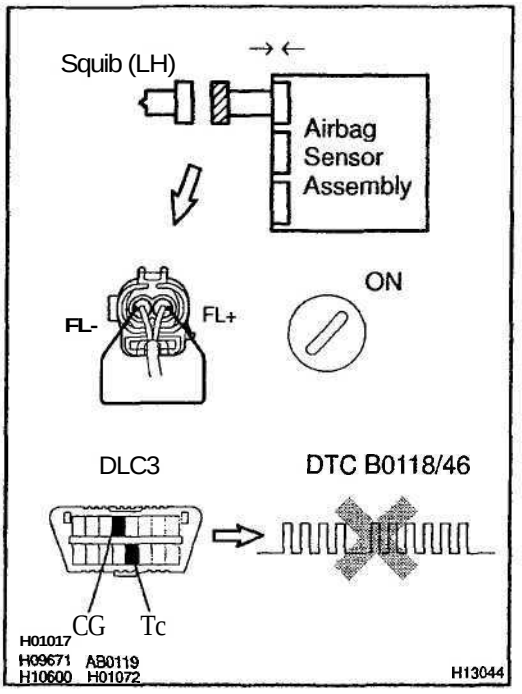

PREPARATION:

(a) Connect the connector to the airbag sensor assembly.
(b) Using a service wire, connect FL+ and FL- of the connector (on the side airbag assembly side) between the side airbag assembly (LH) and the airbag sensor assembly.
(c) Connect negative (–) terminal cable to the battery, and wait at least for 2 seconds.

CHECK:

(a) Turn the ignition switch to ON and wait at least for 20 seconds.
(b) Clear the DTC stored in memory
(See step 5 on page DI–326).
(c) Turn the ignition switch to LOCK, and wait at least for 20 seconds.
(d) Turn the ignition switch to ON, and wait at least for 20 seconds.
(e) Check the DTC (See page DI-326).

OK:

DTC B0118/46 is not output.

HINT:

Codes other than code B0118/46 may be output at this time, but they are not relevant to this check.

NG	Replace airbag sensor assembly.

OK

4	**Check side squib (LH).**

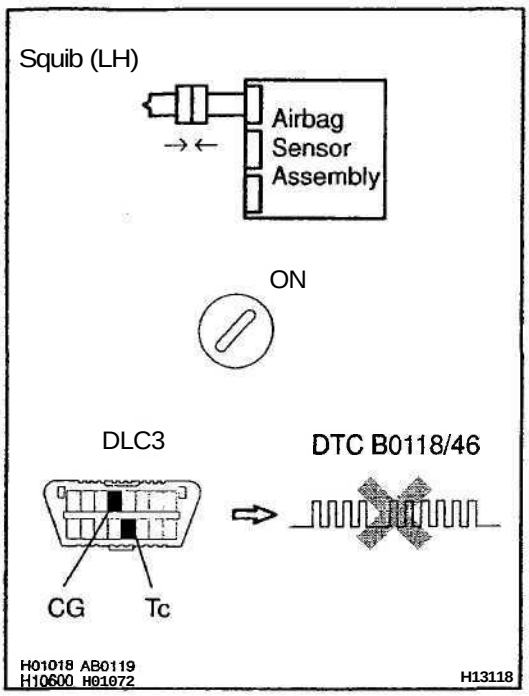

PREPARATION:

(a) Turn the ignition switch to LOCK.
(b) Disconnect negative (-) terminal cable from the battery, and wait at least for 90 seconds.
(c) Connect the side airbag assembly (LH) connector.
(d) Connect negative (-) terminal cable to the battery, and wait at least for 2 seconds.

CHECK:

(a) Turn the ignition switch to ON, and wait at least for 20 seconds.
(b) Clear the DTC stored in memory (See step 5 on page DI–326).
(c) Turn the ignition switch to LOCK, and wait at least for 20 seconds.
(d) Turn the ignition switch to ON, and wait at least for 20 seconds.
(e) Check the DTC (See page DI-326).

OK:

DTC B0118/46 is not output.

HINT:

Codes other than code B0118/46 may be output at this time, but they are not relevant to this check.

NG → **Replace side airbag assembly (LH).**

OK

From the results of the above inspection, the malfunctioning part can now be considered normal. To make sure of this, use the simulation method to check. If the malfunctioning part can not be detected by the simulation method, replace all SRS components including the wire harness.

DI6PJ-01

DTC	B0130/63	Short in P/T Squib (RH) Circuit

CIRCUIT DESCRIPTION

The P/T squib (RH) circuit consists of the airbag sensor assembly and seat belt pretensioner (RH). It causes the SRS to deploy when the SRS deployment conditions are satisfied.
For details of the function of each component, see OPERATION on page RS-2.
DTC B0130/63 is recorded when a short is detected in the P/T squib (RH) circuit.

DTC No.	DTC Detecting Condition	Trouble Area
B0130/63	• Short circuit between PR+ wire harness and PR- wire harness of squib • P/T squib (RH) malfunction • Airbag sensor assembly malfunction	• Seat belt pretensioner (RH) • Airbag sensor assembly •Wire harness

WIRING DIAGRAM

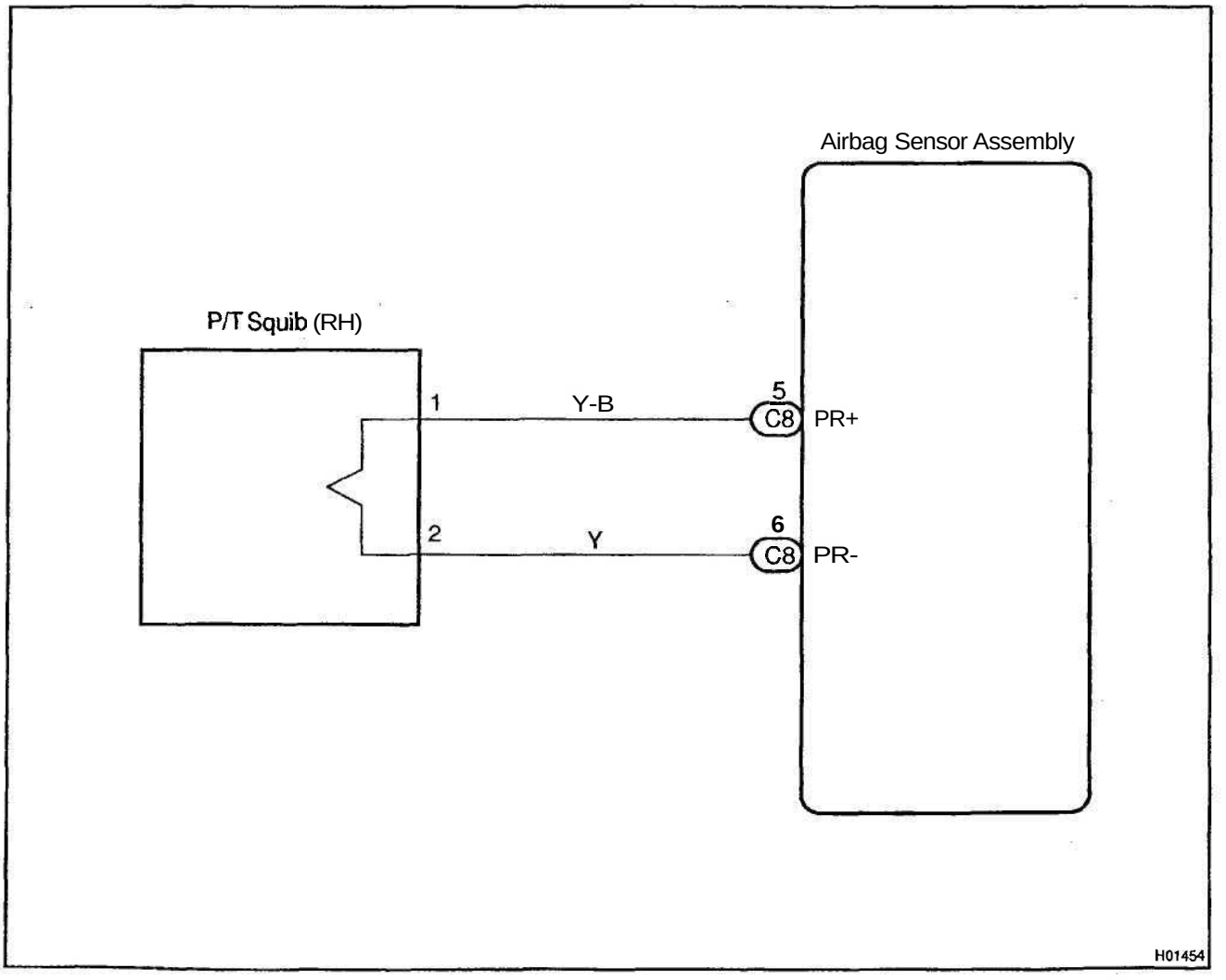

INSPECTION PROCEDURE

1	Prepare for inspection (See step 1 on page **DI–471).**

2	Check **P/T** squib (RH) circuit.

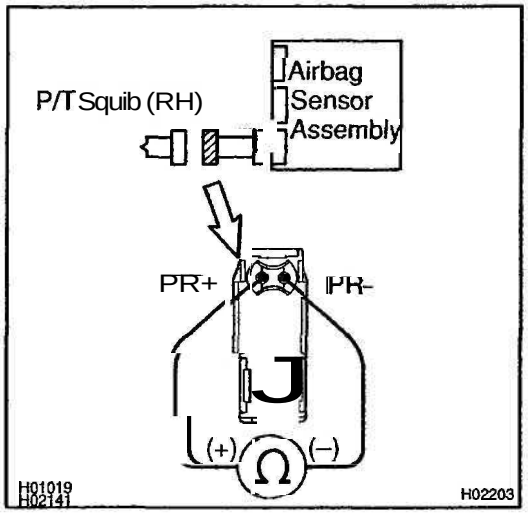

PREPARATION:
Release the airbag activation prevention mechanism of the connector (on the airbag sensor assembly side) between the airbag sensor assembly and the seat belt pretensioner (RH) (See page DI–326).

CHECK:
For the connector (on the seat belt pretensioner side) between the seat belt pretensioner (RH) and the airbag sensor assembly, measure the resistance between PR+ and PR–.

OK:
Resistance: 1 MΩ or Higher

NG → **Repair or replace harness or connector between seat belt pretensioner (RH) and airbag sensor assembly.**

OK

3	Check airbag sensor assembly.

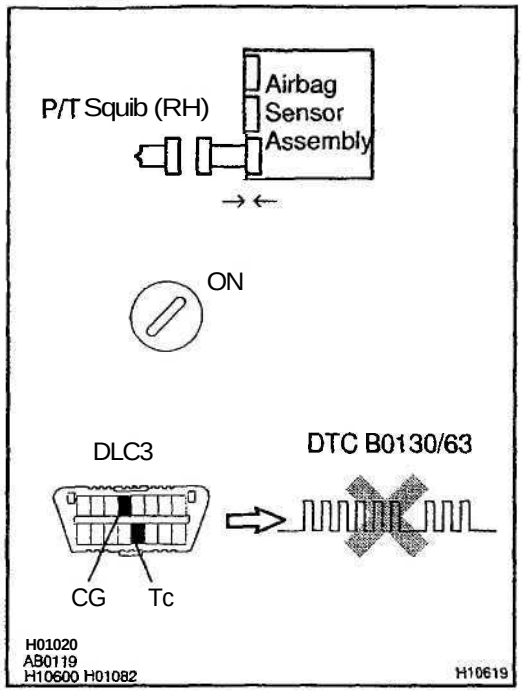

PREPARATION:

(a) Connect the connector to the airbag sensor assembly.
(b) Connect negative (-) terminal cable to the battery, and wait at least for 2 seconds.

CHECK:

(a) Turn the ignition switch to ON and wait at least for 20 seconds.
(b) Clear the DTC stored in memory (See page DI-326).
(c) Turn the ignition switch to LOCK, and wait at least for 20 seconds.
(d) Turn the ignition switch to ON, and wait at least for 20 seconds.
(e) Check the DTC (See page DI-326).

OK:

DTC B0130/63 is not output.

HINT:

Codes other than code B0130/63 may be output at this time, but they are not relevant to this check.

NG → **Replace airbag sensor assembly.**

OK

4	Check P/T squib (RH).

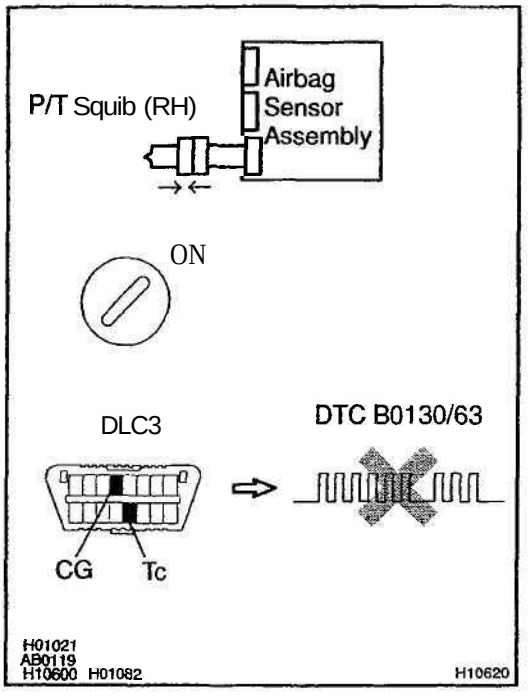

PREPARATION:

(a) Turn the ignition switch to LOCK.
(b) Disconnect negative (-) terminal cable from the battery, and wait at least for 90 seconds.
(c) Connect the seat belt pretensioner (RH) connector.
(d) Connect negative (-) terminal cable to the battery, and wait at least for 2 seconds.

CHECK:

(a) Turn the ignition switch to LOOK, and wait at least for 20 second.
(b) Turn the ignition switch to ON, and wait at least for 20 seconds.
(c) Clear the DTC stored in memory (See page DI-326).
(d) Turn the ignition switch to LOCK, and wait at least for 20 seconds.
(e) Turn the ignition switch to ON, and wait at least for 20 seconds.
(f) Check the DTC (See page DI-326).

OK:

DTC B0130/63 is not output.

HINT:

Codes other than code B0130/63 may be output at this time, but they are not relevant to this check.

NG → **Replace seat belt pretensioner (RH).**

OK

From the results of the above inspection, the malfunctioning part can now be considered normal. To make sure of this, use the simulation method to check.

DTC	B0131/64	Open in P/T Squib (RH) Circuit

CIRCUIT DESCRIPTION

The P/T squib circuit (RH) consists of the airbag sensor assembly and seat belt pretensioner (RH). It causes the SRS to deploy when the SRS deployment conditions are satisfied.
For details of the function of each component, see OPERATION on page RS–2.
DTC B0131/64 is recorded when an open is detected in the P/T squib (RH) circuit.

DTC No.	DTC Detecting Condition	Trouble Area
B0131/64	• Open circuit in PR+ wire harness or PR– wire harness of squib • P/T squib (RH) malfunction • Airbag sensor assembly malfunction	• Seat belt pretensioner (RH) • Airbag sensor assembly • Wire harness

WIRING DIAGRAM

See page DI–395.

INSPECTION PROCEDURE

1	Prepare for inspection (See step 1 on page DI–471).

2	Check P/T squib (RH) circuit.

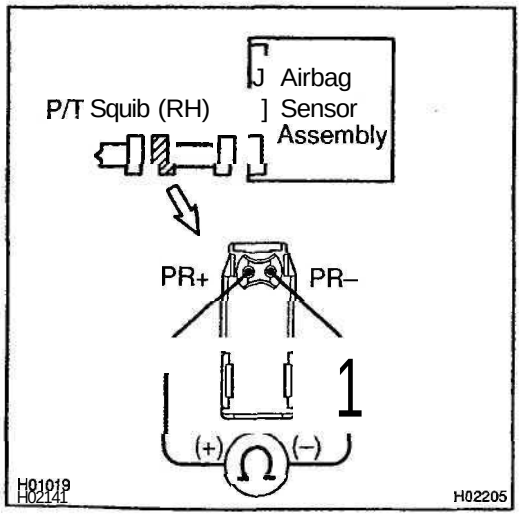

CHECK:
For the connector (on the seat belt pretensioner side) between the seat belt pretensioner (RH) and the airbag sensor assembly, measure the resistance between PR+ and PR–.
OK:
Resistance: Below 1 Ω

NG → Repair or replace harness or connector between seat belt pretensioner (RH) and airbag sensor assembly.

OK

3	Check airbag sensor assembly.

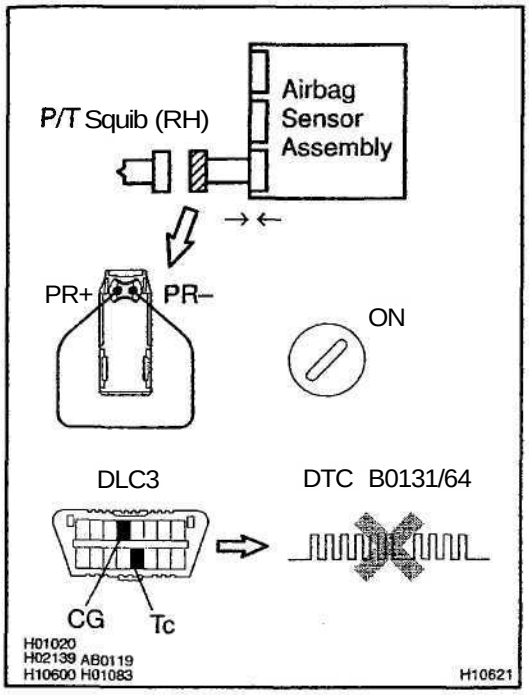

PREPARATION:

(a) Connect the connector to the airbag sensor assembly.
(b) Using a service wire, connect PR+ and PR- of the connector (on the seat belt pretensioner side) between the seat belt pretensioner (RH) and the airbag sensor assembly.
(c) Connect negative (-) terminal cable to the battery, and wait at least for 2 seconds.

CHECK:

(a) Turn the ignition switch to ON and wait at least for 20 seconds.
(b) Clear the DTC stored in memory (See page DI–326).
(c) Turn the ignition switch to LOCK, and wait at least for 20 seconds.
(d) Turn the ignition switch to ON, and wait at least for 20 seconds.
(e) Check the DTC (See page DI-326).

OK:

DTC B0131/64 is not output.

HINT:

Codes other than code B0131/64 may be output at this time, but they are not relevant to this check.

NG	Replace airbag sensor assembly.

OK

4	Check P/T squib (RH).

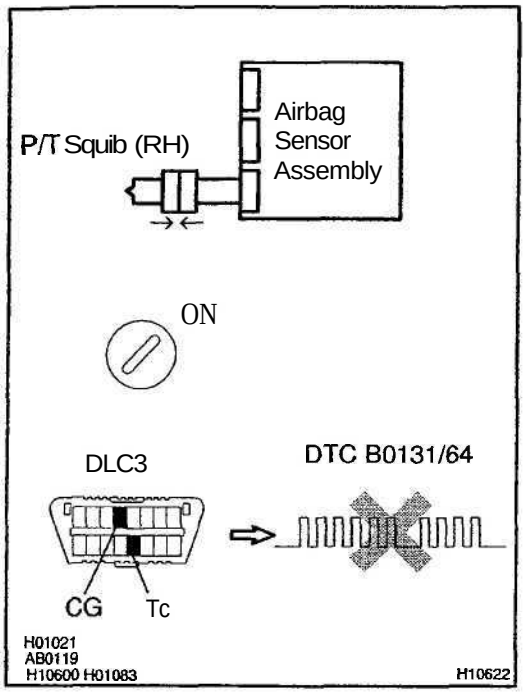

PREPARATION:

(a) Turn the ignition switch to LOCK.
(b) Disconnect negative (-) terminal cable from the battery, and wait at least for 90 seconds.
(c) Connect the seat belt pretensioner (RH) connector.
(d) Connect negative (-) terminal cable to the battery, and wait at least for 2 seconds.

CHECK:

(a) Turn the ignition switch to ON, and wait at least for 20 seconds.
(b) Clear the DTC stored in memory (See page DI-326).
(c) Turn the ignition switch to LOCK, and wait at least for 20 seconds.
(d) Turn the ignition switch to ON, and wait at least for 20 seconds.
(e) Check the DTC (See page DI-326).

OK:

DTC B0131/64 is not output.

HINT:

Codes other than code B0131/64 may be output at this time, but they are not relevant to this check.

NG → **Replace seat belt pretensioner (RH).**

OK

From the results of the above inspection, the malfunctioning part can now be considered normal. To make sure of this, use the simulation method to check.

DTC	B0132/61	Short in P/T Squib (RH) Circuit (to Ground)

CIRCUIT DESCRIPTION

The P/T squib (RH) circuit consists of the airbag sensor assembly and seat belt pretensioner (RH).
It causes the SRS to deploy when the SRS deployment conditions are satisfied.
For details of the function of each component, see OPERATION on page RS–2.
DTC B0132/61 is recorded when a ground short is detected in the P/T squib (RH) circuit.

DTC No.	DTC Detecting Condition	Trouble Area
B0132/61	• Short circuit in P/T squib (RH) wire harness (to ground) • P/T squib (RH) malfunction • Airbag sensor assembly malfunction	• Seat belt pretensioner (RH) • Airbag sensor assembly • Wire harness

WIRING DIAGRAM

See page DI–395.

INSPECTION PROCEDURE

1	Prepare for inspection (See step 1 on page DI–471).

2	Check P/T squib (RH) circuit.

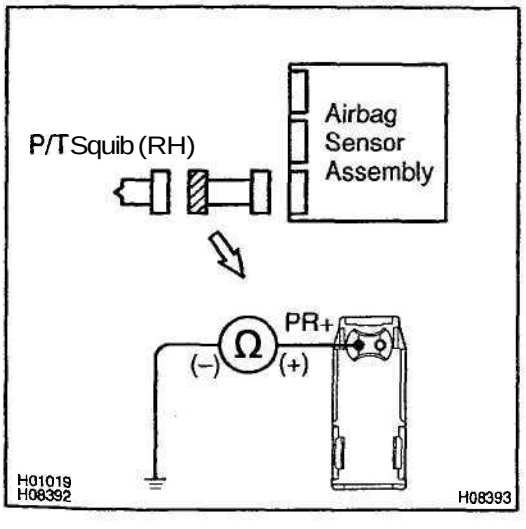

CHECK:

For the connector (on the seat belt pretensioner side) between the seat belt pretensioner (RH) and the airbag sensor assembly, measure the resistance between PR+ and body ground.

OK:

Resistance: 1 MΩ or Higher

NG → **Repair or replace harness or connector between seat belt pretensioner (RH) and airbag sensor assembly.**

OK

3	Check airbag sensor assembly.

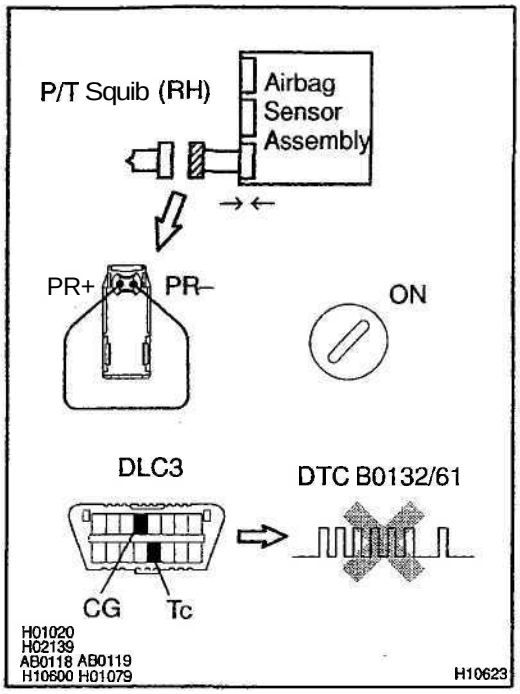

PREPARATION:

(a) Connect the connector to the airbag sensor assembly.
(b) Using a service wire, connect PR+ and PR- of the connector (on the seat belt pretensioner side) between the seat belt pretensioner (RH) and the airbag sensor assembly.
(c) Connect negative (–) terminal cable to the battery, and wait at least for 2 seconds.

CHECK:

(a) Turn the ignition switch to ON and wait at least for 20 seconds.
(b) Clear the DTC stored in memory (See step 5 on page DI–326).
(c) Turn the ignition switch to LOCK, and wait at least for 20 seconds.
(d) Turn the ignition switch to ON, and wait at least for 20 seconds.
(e) Check the DTC (See page DI-326).

OK:

DTC B0132/61 is not output.

HINT:

Codes other than code B0132/61 may be output at this time, but they are not relevant to this check.

NG → **Replace airbag sensor assembly.**

OK

4	Check P/T squib (RH).

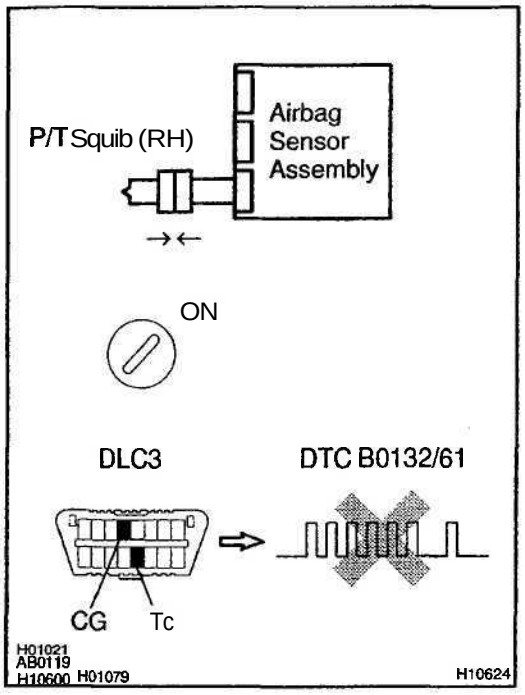

PREPARATION:

(a) Turn the ignition switch to LOCK.
(b) Disconnect negative (-) terminal cable from the battery, and wait at least for 90 seconds.
(c) Connect the seat belt pretensioner (RH) connector.
(d) Connect negative (-) terminal cable to the battery, and wait at least for 2 seconds.

CHECK:

(a) Turn the ignition switch to ON, and wait at least for 20 seconds.
(b) Clear the DTC stored in memory (See step 5 on page DI–326).
(c) Turn the ignition switch to LOCK, and wait at least for 20 seconds.
(d) Turn the ignition switch to ON, and wait at least for 20 seconds.
(e) Check the DTC (See page DI-326).

OK:

DTC B0132/61 is not output.

HINT:

Codes other than code B0132/61 may be output at this time, but they are not relevant to this check.

NG → **Replace seat belt pretensioner (RH).**

OK

From the results of the above inspection, the malfunctioning part can now be considered normal. To make sure of this, use the simulation method to check. If the malfunctioning part can not be detected by the simulation method, replace all SRS components including the wire harness.

DTC	B0133/62	Short in P/T Squib (RH) Circuit (to B+)

CIRCUIT DESCRIPTION

The P/T squib (RH) circuit consists of the airbag sensor assembly and seat belt pretensioner (RH). It causes the SRS to deploy when the SRS deployment conditions are satisfied.
For details of the function of each component, see OPERATION on page RS–2.
DTC B0133/62 is recorded when a B+ short is detected in the P/T squib (RH) circuit.

DTC No.	DTC Detecting Condition	Trouble Area
B0133/62	• Short circuit in seat belt pretensioner (RH) wire harness (to B+) • P/T squib (RH) malfunction • Airbag sensor assembly malfunction	• Seat belt pretensioner (RH) • Airbag sensor assembly • Wire harness

WIRING DIAGRAM

See page DI–395.

INSPECTION PROCEDURE

1	Prepare for inspection (See step 1 on page DI–471).

2	Check P/T squib (RH) circuit.

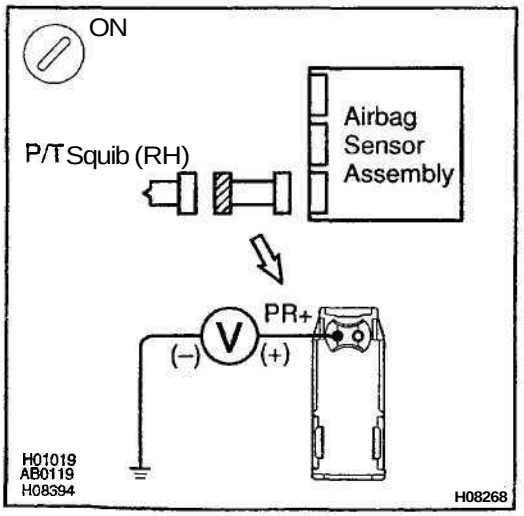

CHECK:

(a) Turn the ignition switch to ON.

(b) For the connector (on the seat belt pretensioner side) between the seat belt pretensioner (RH) and the airbag sensor assembly, measure the voltage between PR+ and body ground.

OK:

Voltage: 0 V

NG → **Repair or replace harness or connector between seat belt pretensioner (RH) and airbag sensor assembly.**

OK

3	**Check airbag sensor assembly.**

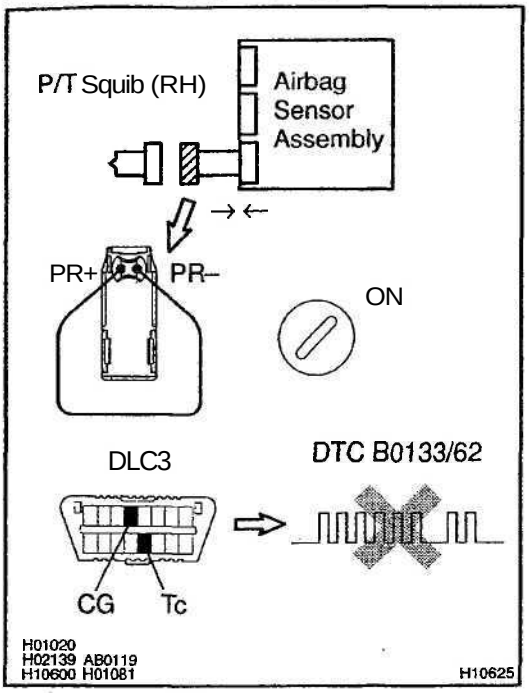

PREPARATION:

(a) Connect the connector to the airbag sensor assembly.
(b) Using a service wire, connect PR+ and PR— of the connector (on the seat belt pretensioner side) between the seat belt pretensioner (RH) and the airbag sensor assembly.
(c) Connect negative (–) terminal cable to the battery, and wait at least for 2 seconds.

CHECK:

(a) Turn the ignition switch to ON and wait at least for 20 seconds.
(b) Clear the DTC stored in memory
(See step 5 on page DI-326).
(c) Turn the ignition switch to LOCK, and wait at least for 20 seconds.
(d) Turn the ignition switch to ON, and wait at least for 20 seconds.
(e) Check the DTC (See page DI-326).

OK:

DTC B0133/62 is not output.

HINT:

Codes other than code B0133/62 may be output at this time, but they are not relevant to this check.

NG	**Replace airbag sensor assembly.**

OK

4	Check P/T squib (RH).

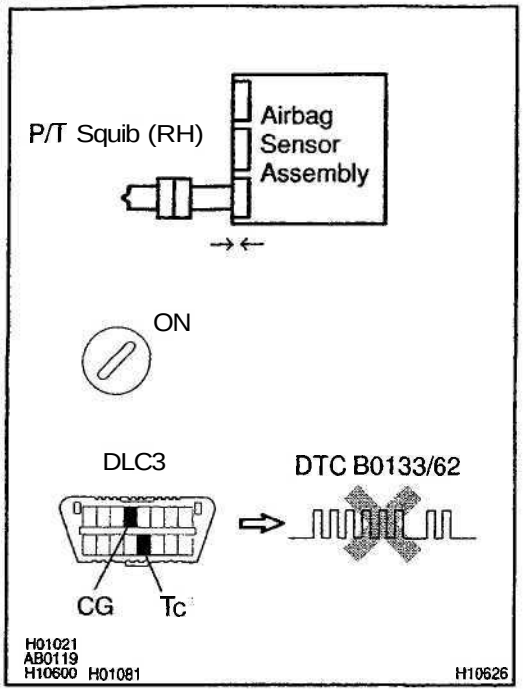

PREPARATION:

(a) Turn ignition switch to LOCK.
(b) Disconnect negative (-) terminal cable from the battery, and wait at least for 90 seconds.
(c) Connect the seat belt pretensioner (RH) connector.
(d) Connect negative (-) terminal cable to the battery, and wait at least for 2 seconds.

CHECK:

(a) Turn the ignition switch to ON, and wait at least for 20 seconds.
(b) Clear the DTC stored in memory (See step 5 on page DI-326).
(c) Turn the ignition switch to LOCK, and wait at least for 20 seconds.
(d) Turn the ignition switch to ON, and wait at least for 20 seconds.
(e) Check the DTC (See page DI-326).

OK:

DTC B0133/62 is not output.

HINT:

Codes other than code B0133/62 may be output at this time, but they are not relevant to this check.

NG → **Replace seat belt pretensioner (RH).**

OK

From the results of the above inspection, the malfunctioning part can now be considered normal. To make sure of this, use the simulation method to check. If the malfunctioning part can not be detected by the simulation method, replace all SRS components including the wire harness.

DI5PN-01

DTC	B0135/73	Short in P/T Squib (LH) Circuit

CIRCUIT DESCRIPTION

The P/T squib (LH) circuit consists of the airbag sensor assembly and seat belt pretensioner (LH). It causes the SRS to deploy when the SRS deployment conditions are satisfied.
For details of the function of each component, see OPERATION on page RS-2.
DTC B0135/73 is recorded when a short is detected in the P/T squib (LH) circuit.

DTC No.	DTC Detecting Condition	Trouble Area
B0135/73	• Short circuit between PL+ wire harness and PL- wire harness of squib • P/T squib (LH) malfunction • Airbag sensor assembly malfunction	• Seat belt pretensioner (LH) • Airbag sensor assembly • Wire harness

WIRING DIAGRAM

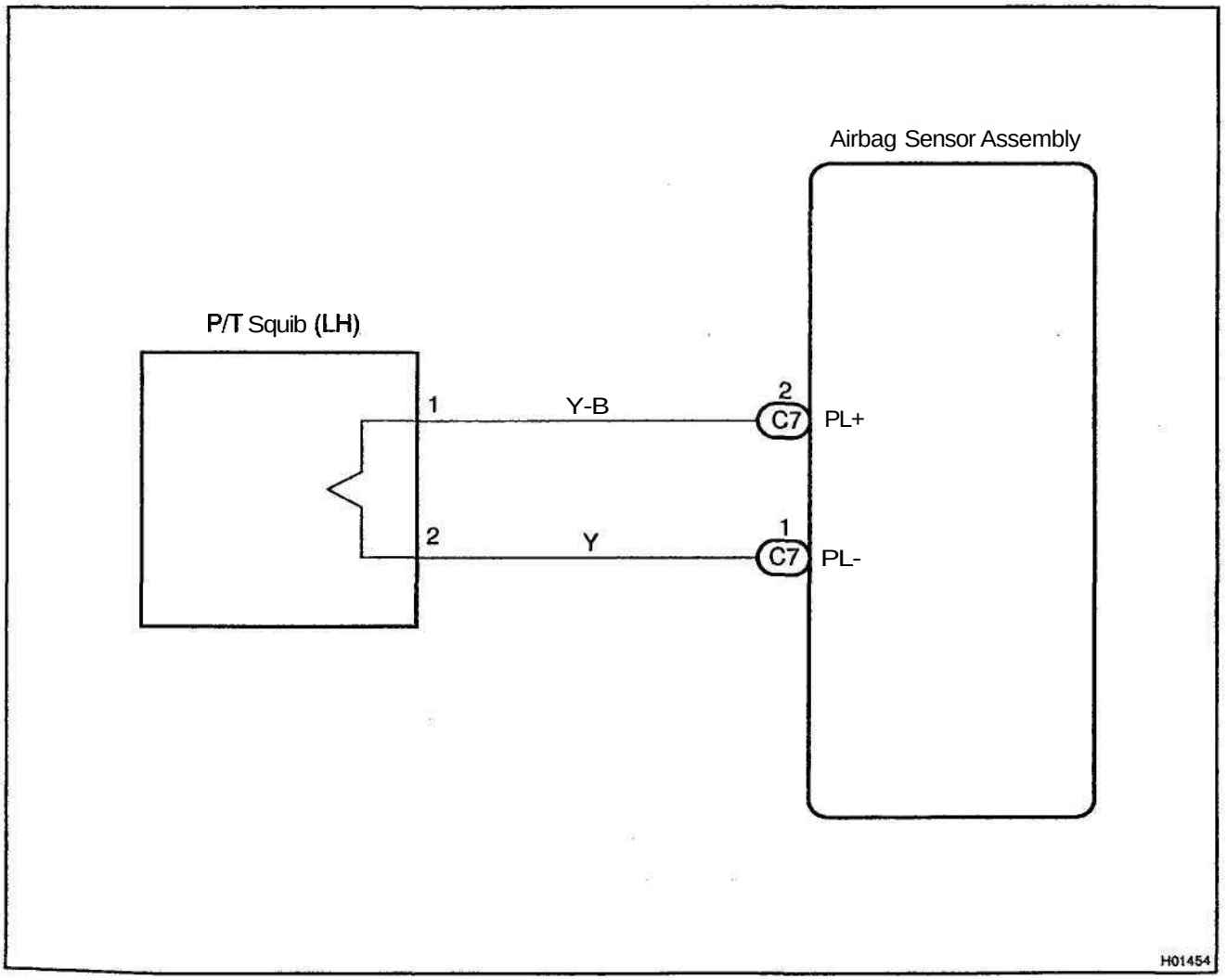

INSPECTION PROCEDURE

1	Prepare for inspection (See step 1 on page DI–471).

2	Check P/T squib (LH) circuit.

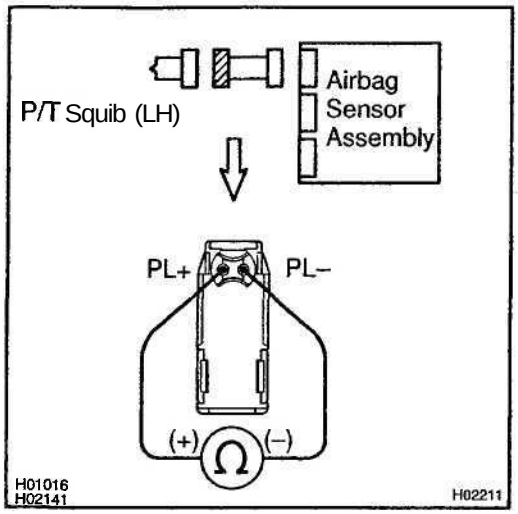

PREPARATION:

Release the airbag activation prevention mechanism of the connector (on the airbag sensor assembly side) between the airbag sensor assembly and the seat belt pretensioner (LH) (See page DI–326).

CHECK:

For the connector (on the seat belt pretensioner side) between the seat belt pretensioner (LH) and the airbag sensor assembly, measure the resistance between PL+ and PL–.

OK:

Resistance: 1 MΩ or Higher

NG → **Repair or replace harness or connector between seat belt pretensioner (LH) and airbag sensor assembly.**

OK

3	**Check airbag sensor assembly.**

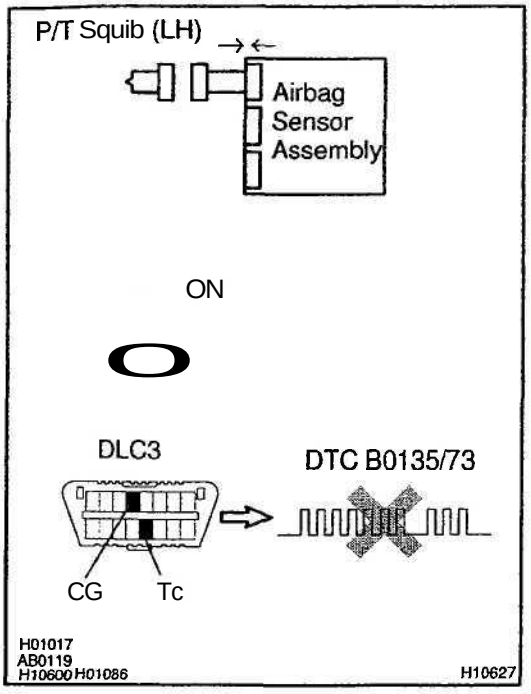

PREPARATION:

(a) Connect the connector to the airbag sensor assembly.
(b) Connect negative (-} terminal cable to the battery, and wait at least for 2 seconds.

CHECK:

(a) Turn the ignition switch to ON and wait at least for 20 seconds.
(b) Clear the DTC stored in memory (See page DI–326).
(c) Turn the ignition switch to LOCK, and wait at least for 20 seconds.
(d) Turn the ignition switch to ON, and wait at least for 20 seconds.
(e) Check the DTC (See page DI-326).

OK:

DTC B0135/73 is not output.

HINT:

Codes other than code B0135/73 may be output at this time, but they are not relevant to this check.

NG → **Replace airbag sensor assembly.**

OK

4	Check P/T squib (LH).

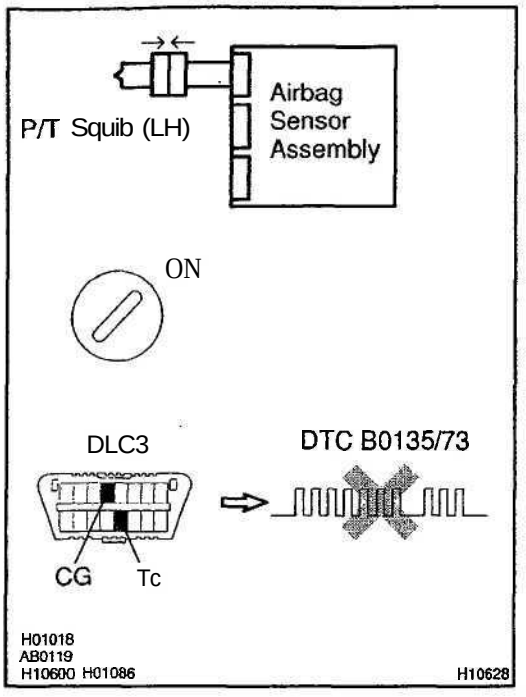

PREPARATION:

(a) Turn the ignition switch to LOCK.
(b) Disconnect negative (-) terminal cable from the battery, and wait at least for 90 seconds.
(c) Connect the seat belt pretensioner (LH) connector.
(d) Connect negative (-) terminal cable to the battery, and wait at least for 2 seconds.

CHECK:

(a) Turn the ignition switch to LOOK, and wait at least for 20 second.
(b) Turn the ignition switch to ON, and wait at least for 20 seconds.
(c) Clear the DTC stored in memory (See page DI–326).
(d) Turn the ignition switch to LOCK, and wait at least for 20 seconds.
(e) Turn the ignition switch to ON, and wait at least for 20 seconds.
(f) Check the DTC (See page DI-326).

OK:

DTC B0135/73 is not output.

HINT:

Codes other than code B0135/73 may be output at this time, but they are not relevant to this check.

NG → **Replace seat belt pretensioner (LH).**

OK

From the results of the above inspection, the malfunctioning part can now be considered normal. To make sure of this, use the simulation method to check.

DTC	B0136/74	Open in P/T Squib (LH) Circuit

CIRCUIT DESCRIPTION

The P/T squib circuit (LH) consists of the airbag sensor assembly and seat belt pretensioner (LH).
It causes the SRS to deploy when the SRS deployment conditions are satisfied.
For details of the function of each component, see OPERATION on page RS–2.
DTC B0136/74 is recorded when an open is detected in the P/T squib (LH) circuit.

DTC No.	DTC Detecting Condition	Trouble Area
B0136/74	• Open circuit in PL+ wire harness or PL- wire harness of squib • P/T squib (LH) malfunction • Airbag sensor assembly malfunction	• Seat belt pretensioner (LH) • Airbag sensor assembly • Wire harness

WIRING DIAGRAM

See page DI–408.

INSPECTION PROCEDURE

1	**Prepare for inspection (See step 1 on page DI–471).**

2	Check P/T squib (LH) circuit.

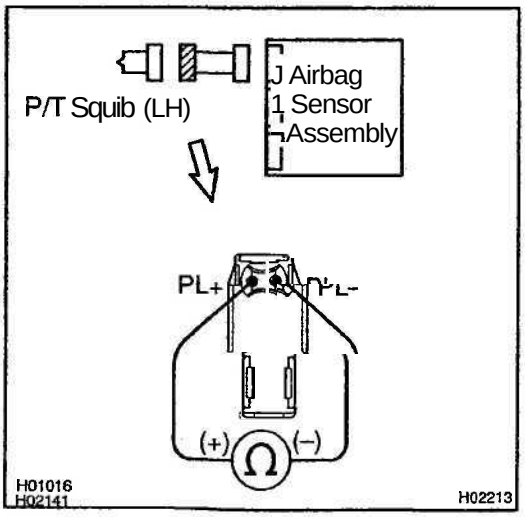

CHECK:
For the connector (on the seat belt pretensioner side) between the seat belt pretensioner (LH) and the airbag sensor assembly, measure the resistance between PL+ and PL–.
OK:
Resistance: Below 1 £

NG → Repair or replace harness or connector between seat belt pretensioner (LH) and airbag sensor assembly.

OK

3	Check airbag sensor assembly.

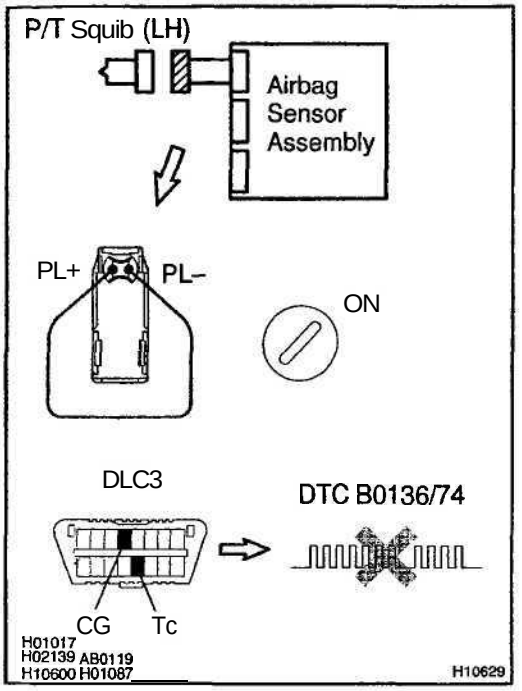

PREPARATION:

(a) Connect the connector to the airbag sensor assembly.
(b) Using a service wire, connect PL+ and PL- of the connector (on the seat belt pretensioner side) between the seat belt pretensioner (LH) and the airbag sensor assembly.
(c) Connect negative (-) terminal cable to the battery, and wait at least for 2 seconds.

CHECK:

(a) Turn the ignition switch to ON and wait at least for 20 seconds.
(b) Clear the DTC stored in memory (See page DI-326).
(c) Turn the ignition switch to LOCK, and wait at least for 20 seconds.
(d) Turn the ignition switch to ON, and wait at least for 20 seconds.
(e) Check the DTC (See page DI-326).

OK:

DTC B0136/74 is not output.

HINT:

Codes other than code B0136/74 may be output at this time, but they are not relevant to this check.

NG	Replace airbag sensor assembly.

OK

4	Check P/T squib (LH).

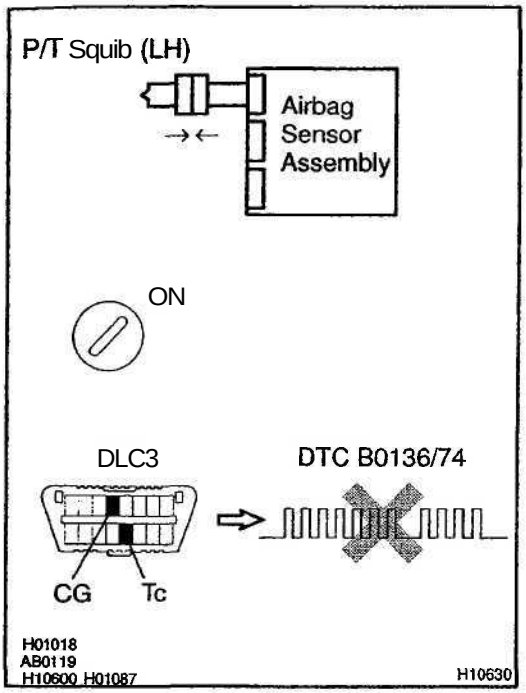

PREPARATION:

(a) Turn the ignition switch to LOCK.
(b) Disconnect negative (-) terminal cable from the battery, and wait at least for 90 seconds.
(c) Connect the seat belt pretensioner (LH) connector.
(d) Connect negative (-) terminal cable to the battery, and wait at least for 2 seconds.

CHECK:

(a) Turn the ignition switch to ON, and wait at least for 20 seconds.
(b) Clear the DTC stored in memory (See page DI-326).
(c) Turn the ignition switch to LOCK, and wait at least for 20 seconds.
(d) Turn the ignition switch to ON, and wait at least for 20 seconds.
(e) Check the DTC (See page DI-326).

OK:

DTC B0136/74 is not output.

HINT:

Codes other than code B0136/74 may be output at this time, but they are not relevant to this check.

NG → **Replace seat belt pretensioner** (LH).

OK

From the results of the above inspection, the malfunctioning part can now be considered normal. To make sure of this, use the simulation method to check.

DTC	B0137/71	Short in P/T Squib (LH) Circuit (to Ground)

CIRCUIT DESCRIPTION

The P/T squib (LH) circuit consists of the airbag sensor assembly and seat belt pretensioner (LH).
It causes the SRS to deploy when the SRS deployment conditions are satisfied.
For details of the function of each component, see OPERATION on page RS–2.
DTC B0137/71 is recorded when a ground short is detected in the P/T squib (LH) circuit.

DTC No.	DTC Detecting Condition	Trouble Area
B0137/71	• Short circuit in P/T squib (LH) wire harness (to ground) • P/T squib (LH) malfunction • Airbag sensor assembly malfunction	• Seat belt pretensioner (LH) • Airbag sensor assembly • Wire harness

WIRING DIAGRAM

See page DI–408.

INSPECTION PROCEDURE

1	**Prepare for inspection (See step 1 on page DI–471).**

2	Check P/T squib (LH) circuit.

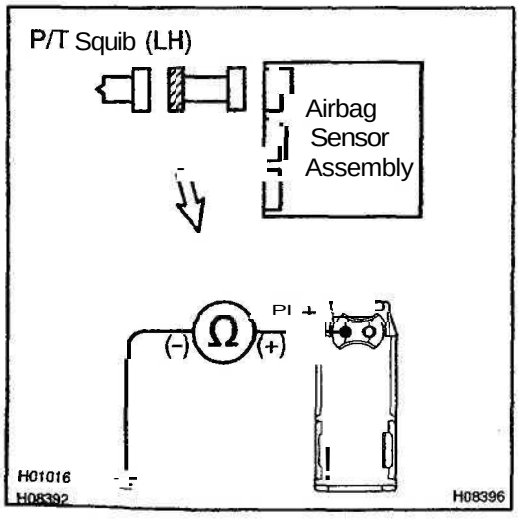

CHECK:
For the connector (on the seat belt pretensioner side) between the seat belt pretensioner (LH) and the airbag sensor assembly, measure the resistance between PL+ and body ground.
OK:
Resistance: 1 MΩ or Higher

NG → Repair or replace harness or connector between seat belt pretensioner (LH) and airbag sensor assembly.

OK

3	Check airbag sensor assembly.

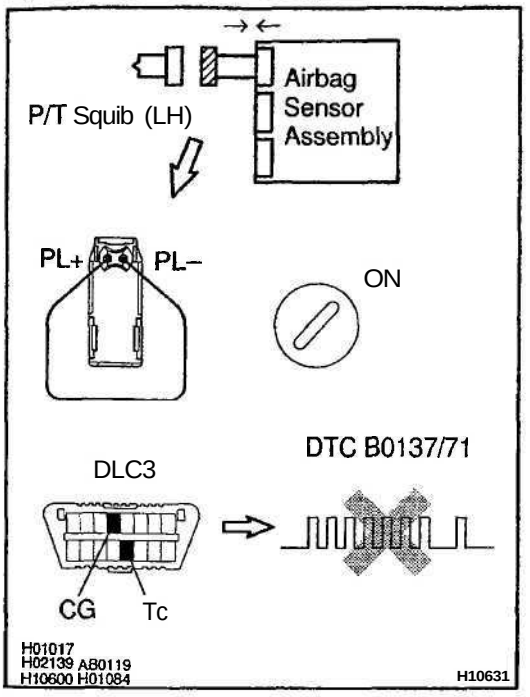

PREPARATION:

(a) Connect the connector to the airbag sensor assembly.
(b) Using a service wire, connect PL+ and PL- of the connector (on the seat belt pretensioner side) between the seat belt pretensioner (LH) and the airbag sensor assembly.
(c) Connect negative (-) terminal cable to the battery, and wait at least for 2 seconds.

CHECK:

(a) Turn the ignition switch to ON and wait at least for 20 seconds.
(b) Clear the DTC stored in memory
(See step 5 on page DI–326).
(c) Turn the ignition switch to LOCK, and wait at least for 20 seconds.
(d) Turn the ignition switch to ON, and wait at least for 20 seconds.
(e) Check the DTC (See page DI-326).

OK:

DTC B0137/71 is not output.

HINT:

Codes other than code B0137/71 may be output at this time, but they are not relevant to this check.

NG	Replace airbag sensor assembly.

OK

4	Check P/T squib (LH).

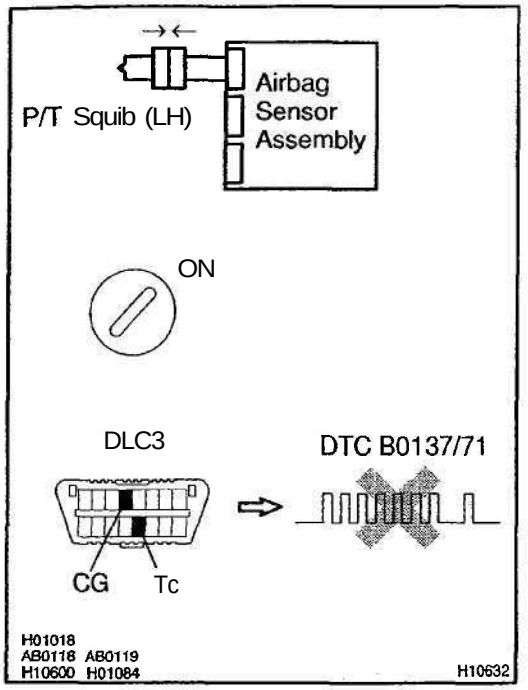

PREPARATION:

(a) Turn the ignition switch to LOCK.
(b) Disconnect negative (-) terminal cable from the battery, and wait at least for 90 seconds.
(c) Connect the seat belt pretensioner (LH) connector.
(d) Connect negative (-) terminal cable to the battery, and wait at least for 2 seconds.

CHECK:

(a) Turn the ignition switch to ON, and wait at least for 20 seconds.
(b) Clear the DTC stored in memory (See step 5 on page DI–326).
(c) Turn the ignition switch to LOCK, and wait at least for 20 seconds.
(d) Turn the ignition switch to ON, and wait at least for 20 seconds.
(e) Check the DTC (See page DI–326).

OK:

DTC B0137/71 is not output.

HINT:

Codes other than code B0137/71 may be output at this time, but they are not relevant to this check.

NG → **Replace seat belt pretensioner (LH).**

OK

From the results of the above inspection, the malfunctioning part can now be considered normal. To make sure of this, use the simulation method to check. If the malfunctioning part can not be detected by the simulation method, replace all SRS components including the wire harness.

DTC	B0138/72	Short in P/T Squib (LH) Circuit (to B+)

CIRCUIT DESCRIPTION

The P/T squib (LH) circuit consists of the airbag sensor assembly and seat belt pretensioner (LH).
It causes the SRS to deploy when the SRS deployment conditions are satisfied.
For details of the function of each component, see OPERATION on page RS–2.
DTC B0138/72 is recorded when a B+ short is detected in the P/T squib (LH) circuit.

DTC No.	DTC Detecting Condition	Trouble Area
B0138/72	• Short circuit in seat belt pretensioner (LH) wire harness (to B+) • P/T squib (LH) malfunction • Airbag sensor assembly malfunction	• Seat belt pretensioner (LH) • Airbag sensor assembly • Wire harness

WIRING DIAGRAM

See page DI–408.

INSPECTION PROCEDURE

1	Prepare for inspection (See step 1 on page DI–471).

2	Check P/T squib (LH) circuit.

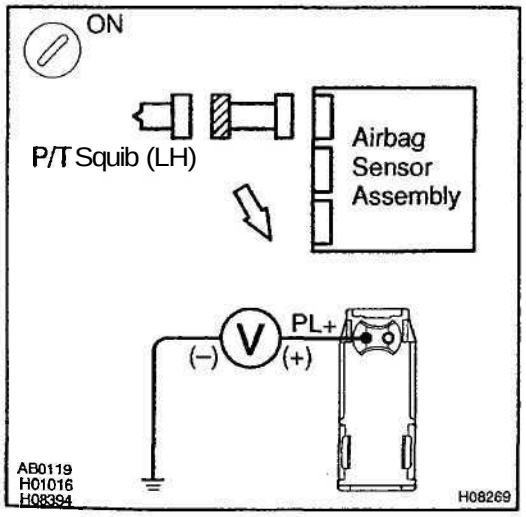

CHECK:

(a) Turn the ignition switch to ON.

(b) For the connector (on the seat belt pretensioner side) between the seat belt pretensioner (LH) and the airbag sensor assembly, measure the voltage between PL+ and body ground.

OK:

Voltage: 0 V

NG → **Repair or replace harness or connector between seat belt pretensioner (LH) and airbag sensor assembly.**

OK

3	Check airbag sensor assembly.

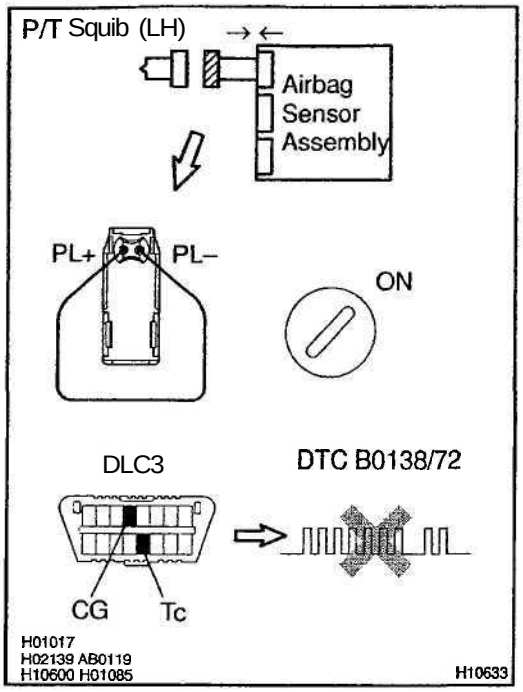

PREPARATION:

(a) Connect the connector to the airbag sensor assembly.

(b) Using a service wire, connect PL+ and PL- of the connector (on the seat belt pretensioner side) between the seat belt pretensioner (LH) and the airbag sensor assembly.

(c) Connect negative (-) terminal cable to the battery, and wait at least for 2 seconds.

CHECK:

(a) Turn the ignition switch to ON and wait at least for 20 seconds.

(b) Clear the DTC stored in memory (See step 5 on page DI–326).

(c) Turn the ignition switch to LOCK, and wait at least for 20 seconds.

(d) Turn the ignition switch to ON, and wait at least for 20 seconds.

(e) Check the DTC (See page DI-326).

OK:

DTC B0138/72 is not output.

HINT:

Codes other than code B0138/72 may be output at this time, but they are not relevant to this check.

NG → **Replace airbag sensor assembly.**

OK

4	Check P/T squib (LH).

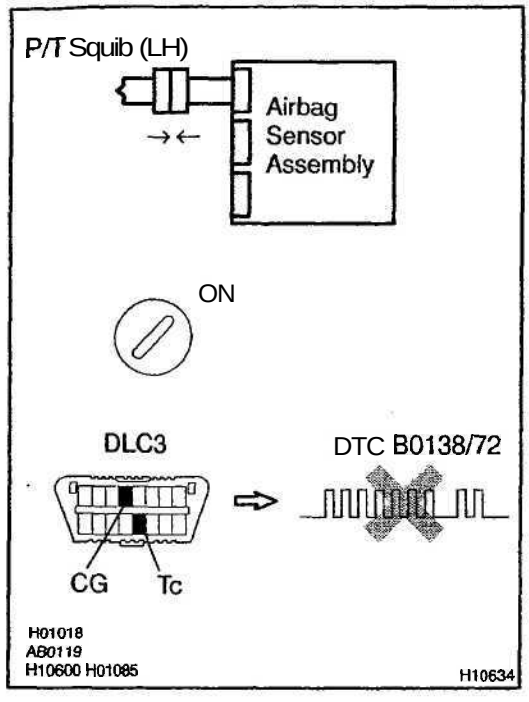

PREPARATION:

(a) Turn the ignition switch to LOCK.
(b) Disconnect negative (-) terminal cable from the battery, and wait at least for 90 seconds.
(c) Connect the seat belt pretensioner (LH) connector.
(d) Connect negative (-) terminal cable to the battery, and wait at least for 2 seconds.

CHECK:

(a) Turn the ignition switch to ON, and wait at least for 20 seconds.
(b) Clear the DTC stored in memory (See step *5* on page DI-326).
(c) Turn the ignition switch to LOCK, and wait at least for 20 seconds.
(d) Turn the ignition switch to ON, and wait at least for 20 seconds.
(e) Check the DTC (See page DI-326).

OK:

DTC B0138/72 is not output.

HINT:

Codes other than code B0138/72 may be output at this time, but they are not relevant to this check.

NG → **Replace seat belt pretensioner (LH).**

OK

From the results of the above inspection, the malfunctioning part can now be considered normal. To make sure of this, use the simulation method to check. If the malfunctioning part can not be detected by the simulation method, replace all SRS components including the wire harness.

DTC	B1100/31	Airbag Sensor Assembly Malfunction

CIRCUIT DESCRIPTION

The airbag sensor assembly consists of a airbag sensor, safing sensor, drive circuit, diagnosis circuit and ignition control, etc.
It receives signals from the airbag sensor, judges whether or not the SRS must be activated, and detects diagnosis system malfunction.
DTC B1100/31 is recorded when occurrence of a malfunction in the airbag sensor assembly is detected.

DTC No.	DTC Detecting Condition	Trouble Area
B1100/31	• Airbag sensor assembly malfunction	• Airbag sensor assembly

INSPECTION PROCEDURE

HINT:
When a malfunction code other than code B1100/31 is displayed at the same time, first repair the malfunction indicated by the malfunction code other than code B1100/31.

1	**Prepare for inspection (See step 1 on page DI–471).**

2	**Check voltage at IG1 and IG2 of airbag sensor assembly.**

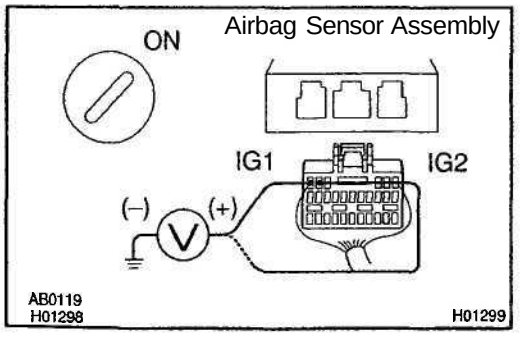

CHECK:
(a) Turn the ignition switch to ON.
(b) Measure the voltage between body ground and each of terminals IG1 and IG2 of the airbag sensor assembly connector.

OK:
Voltage: 10 – 14 V

NG	**Check that an abnormality occurs on the battery and charging system.**

OK

3	Is DTC B1100/31 output again?

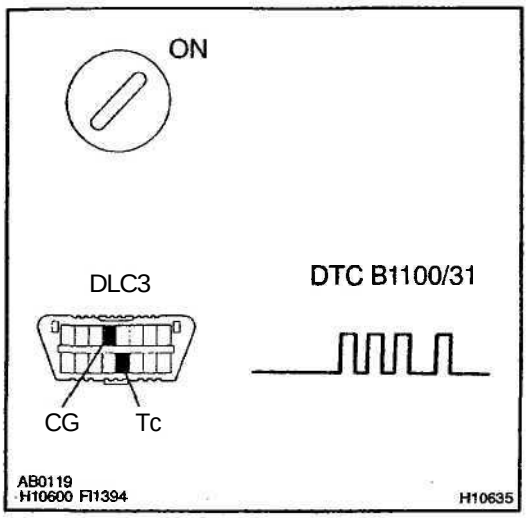

PREPARATION:

Clear the DTC (See step 5 on page DI–326).

CHECK:

(a) Turn the ignition switch to LOCK, and wait at least for 20 seconds.

(b) Turn the ignition switch to ON, and wait at least for 20 seconds.

(c) Repeat operation in step (a) and (b) at least 5 times.

(d) Check the DTC (See page DI–326).

HINT:

Codes other than code B1100/31 may be output at this time, but they are not relevant to this check.

NO → **Using simulation method, reproduce malfunction symptoms (See page IN–20).**

YES

Replace airbag sensor assembly.

DTC	B1140/32	Side Airbag Sensor Assembly (RH) Malfunction

CIRCUIT DESCRIPTION

The side airbag sensor assembly (RH) consists of the safing sensor, diagnosis circuit and lateral deceleration sensor, etc.

It receives signals from the lateral deceleration sensor, judges whether or not the SRS must be activated, and detects diagnosis system malfunction.

DTC B1140/32 is recorded when occurrence of a malfunction in the side airbag sensor assembly (RH) is detected.

DTC No.	DTC Detecting Condition	Trouble Area
B1140/32	• Side airbag sensor assembly (RH) malfunction	• Side airbag sensor assembly (RH) • Wire harness • Airbag sensor assembly

WIRING DIAGRAM

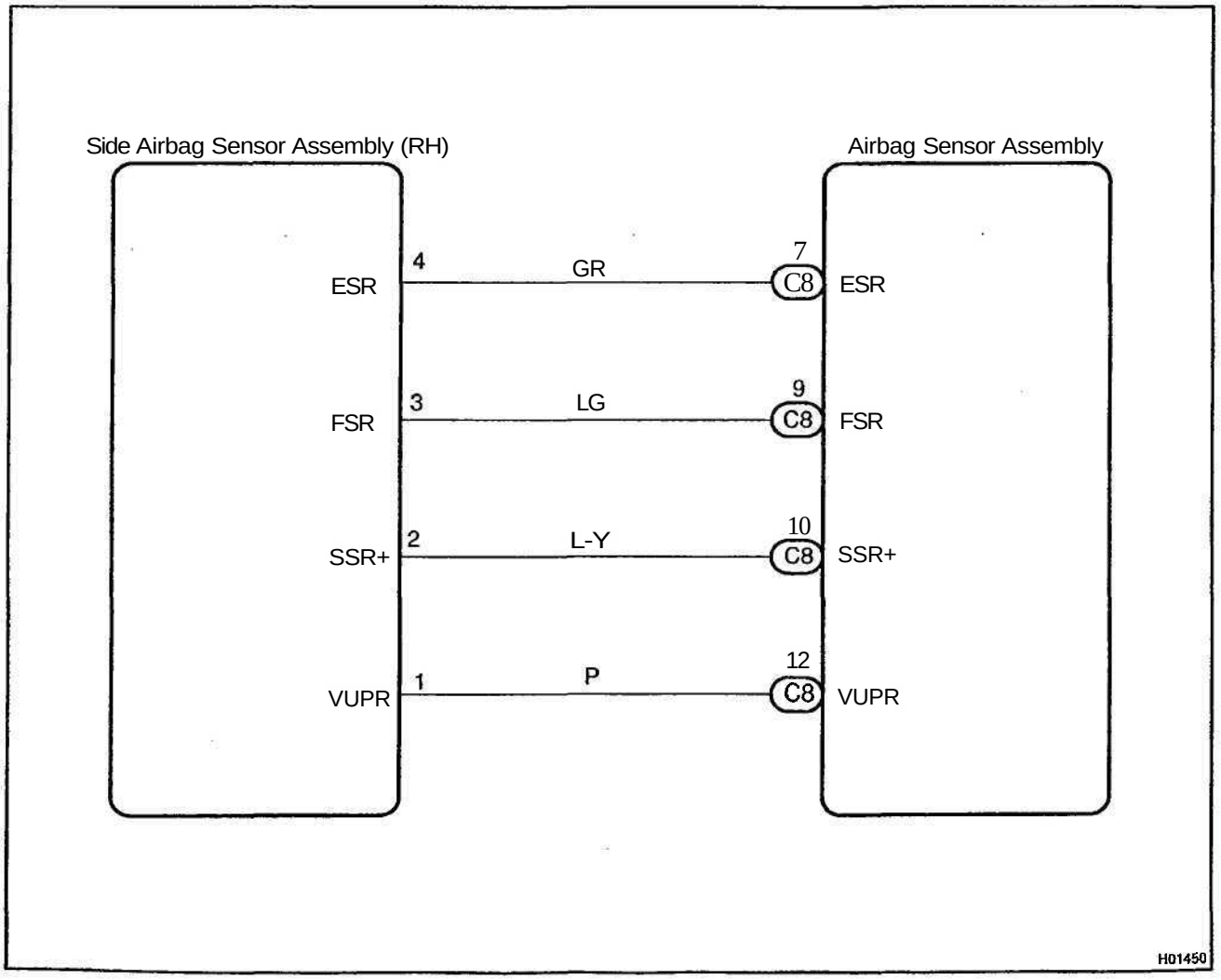

INSPECTION PROCEDURE

1	**Is DTC B1140/32 out put?**

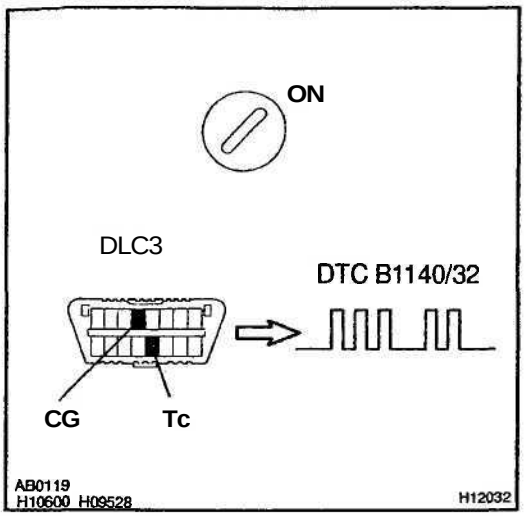

CHECK:

(a) Turn the ignition switch to ON, and wait at least for 20 seconds.
(b) Clear the DTC stored in memory (See page DI–326).
(c) Turn the ignition switch to LOCK, and wait at least for 20 seconds.
(d) Turn the ignition switch to ON, and wait at least for 20 seconds.
(e) Check the DTC (See page DI-326).

HINT:

Codes other than code B1140/32 may be output at this time, but they are not relevant to this check.

YES → **The malfunctioning part can now be considered normal. To make sure of this, use the simulation method to check.**

NO

2	**Is connector of side airbag sensor assembly (RH) properly connected?**

3	**Prepare for inspection (See step 1 on DI–471).**

4	**Check wire harness.**

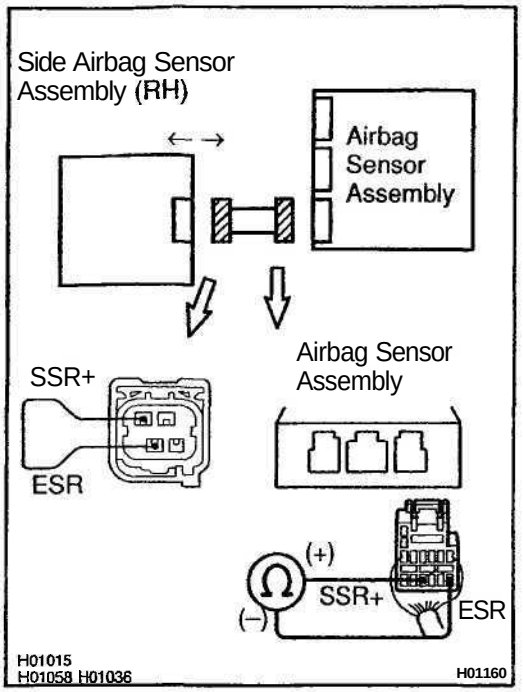

PREPARATION:

(a) Disconnect the side airbag sensor assembly (RH) connector.

(b) Using a service wire, connect SSR+ and ESR of the connector (on the side airbag sensor assembly side) between the side airbag sensor assembly (RH) and airbag sensor assembly.

CHECK:

For the connector (on the airbag sensor assembly side) between the side airbag sensor assembly (RH) and the airbag sensor assembly, measure the resistance between SSR+ and ESR.

OK:

Resistance: Below 1 Ω

NG → **Repair or replace harness or connector between side airbag sensor assembly (RH) and airbag sensor assembly.**

OK

5	Check wire harness.

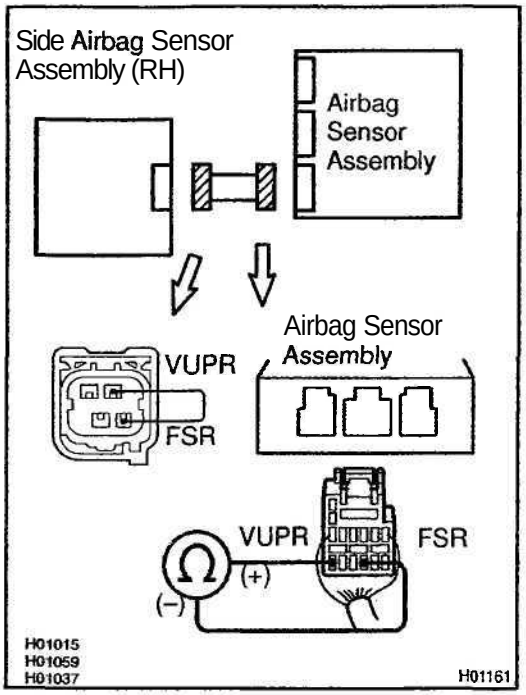

PREPARATION:

Using a service wire, connect VUPR and FSR of the connector (on the side airbag sensor assembly side) between the side airbag sensor assembly (RH) and airbag sensor assembly.

CHECK:

For the connector (on the airbag sensor assembly side) between the side airbag sensor assembly (RH) and the airbag sensor assembly, measure the resistance between VUPR and FSR.

OK:

Resistance: Below 1 Ω

NG → **Repair or replace harness or connector between side airbag sensor assembly (RH) and airbag sensor assembly.**

OK

6	Check wire harness (to ground).

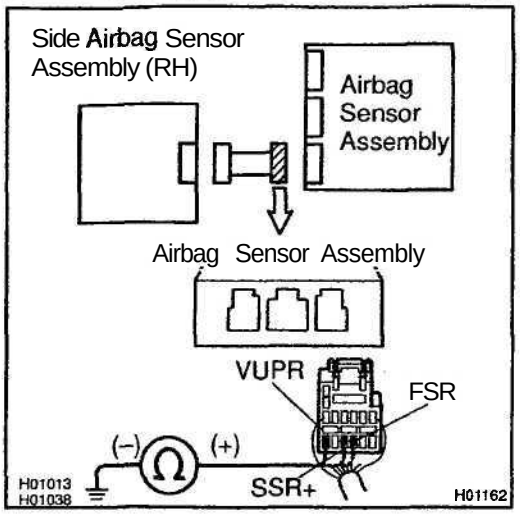

CHECK:

For the connector (on the airbag sensor assembly side) between the side airbag sensor assembly (RH) and the airbag sensor assembly, measure the resistance between body ground and each of SSR+, VUPR and FSR.

OK:

Resistance: Below 1 *£1*

NG → **Repair or replace harness or connector between side airbag sensor assembly (RH) and airbag sensor assembly.**

OK

7	Check wire harness (to B+).

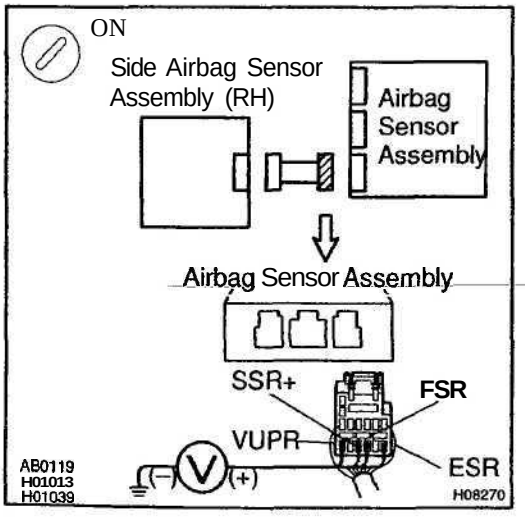

CHECK:

(a) Turn ignition switch to ON.

(b) For the connector (on the airbag sensor assembly side) between the side airbag sensor assembly (RH) and the airbag sensor assembly, measure the voltage between the body ground and each of SSR+, VUPR, ESR and FSR.

OK:

Voltage: 0 V

NG → **Repair or replace harness or connector between side airbag sensor assembly (RH) and airbag sensor assembly.**

OK

8	**Is DTC B1140/32 out put again?**

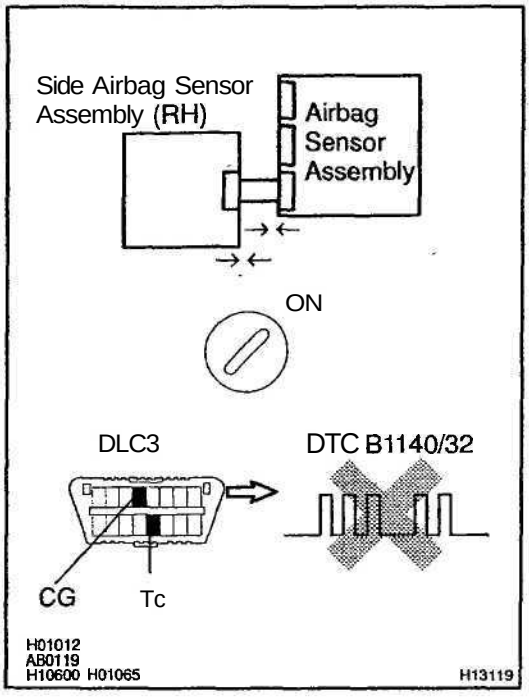

PREPARATION:

(a) Connect the connector to the side airbag sensor assembly (RH).
(b) Connect the connector to the airbag sensor assembly.
(c) Connect negative (-) terminal cable to the battery, and wait at least for 2 seconds.

CHECK:

(a) Turn the ignition switch to ON, and wait at least for 20 seconds.
(b) Clear the DTC stored in memory
(See step 5 on page DI–326).
(c) Turn the ignition switch to LOCK, and wait at least for 20 seconds.
(d) Turn the ignition switch to ON, and wait at least for 20 seconds.
(e) Check the DTC (See page DI-326).

OK:

DTC B1140/32 is not output.

HINT:

Codes other than code B1140/32 may be output at this time, but they are not relevant to this check.

NG	**Go to step 9.**

OK

From the results of the above inspection, the malfunctioning part can now be considered normal. To make sure of this, use the simulation method to check.

9	Check airbag sensor assembly.

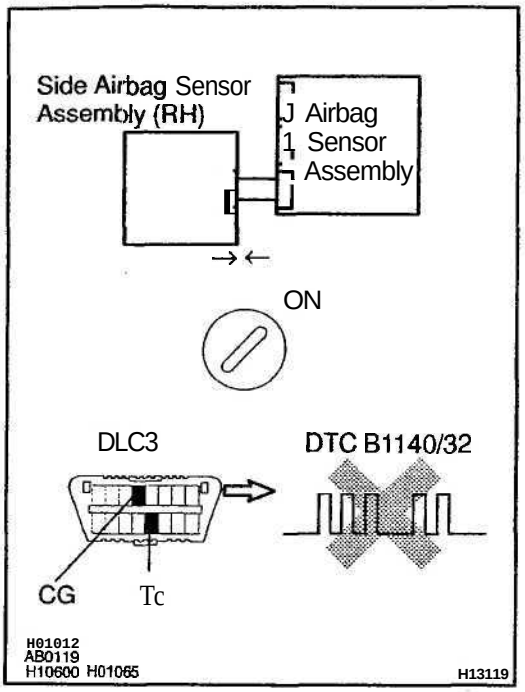

PREPARATION:

(a) Turn the ignition switch to LOCK.

(b) Disconnect negative (-) terminal cable from the battery, and wait at least for 90 seconds.

(c) Disconnect the side airbag sensor (RH) from the connector and connect the side airbag sensor (LH) to the connector.

(d) Connect negative (-) terminal cable to the battery, and wait at least for 2 seconds.

CHECK:

(a) Turn the ignition switch to ON, and wait at least for 20 seconds.

(b) Clear the DTC stored in memory (See step 5 on page DI–326).

(c) Turn the ignition switch to LOCK, and wait at least for 20 seconds.

(d) Turn the ignition switch to ON, and wait at least for 20 seconds.

(e) Check the DTC (See page DI-326).

OK:

DTC B1140/32 is not output.

HINT:

Codes other than code B1140/32 may be output at this time, but they are not relevant to this check.

NG → **Replace airbag sensor assembly.**

OK

10	Check side airbag sensor assembly (RH).

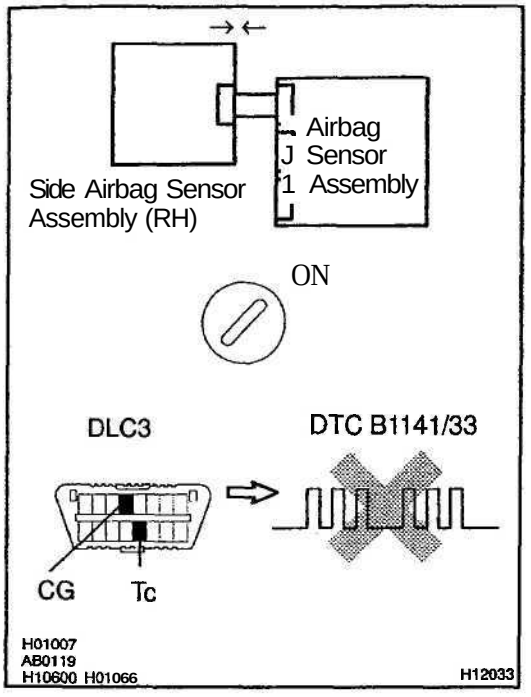

PREPARATION:

(a) Turn the ignition switch to LOCK.
(b) Disconnect negative (-) terminal cable from the battery, and wait at least for 90 seconds.
(c) Connect the side airbag sensor (RH) to the connector that the side airbag sensor (LH) was connected to.
(d) Connect negative (-) terminal cable to the battery, and wait at least for 2 seconds.

CHECK:

(a) Turn the ignition switch to ON, and wait at least for 20 seconds.
(b) Clear the DTC stored in memory (See step 5 on page DI–326).
(c) Turn the ignition switch to LOCK, and wait at least for 20 seconds.
(d) Turn the ignition switch to ON, and wait at least for 20 seconds.
(e) Check the DTC (See page DI-326).

OK:

DTC B1141/33 is not output.

HINT:

Codes other than code B1141/33 may be output at this time, but they are not relevant to this check.

NG → **Replace side airbag sensor assembly (RH).**

OK →

From the results of the above inspection, the malfunctioning part can now be considered normal. To make sure of this, use the simulation method to check.

DTC	B1141/33	Side Airbag Sensor Assembly (LH) Malfunction

CIRCUIT DESCRIPTION

The side airbag sensor assembly (LH) consists of the safing sensor, diagnosis circuit and lateral deceleration sensor, etc.

It receives signals from the lateral deceleration sensor, judges whether or not the SRS must be activated, and detects diagnosis system malfunction.

DTC B1141/33 is recorded when occurrence of a malfunction in the side airbag sensor assembly (LH) is detected.

DTC No.	DTC Detecting Condition	Trouble Area
B1141/33	• Side airbag sensor assembly (LH) malfunction	• Side airbag sensor assembly (LH) • Wire harness • Airbag sensor assembly

WIRING DIAGRAM

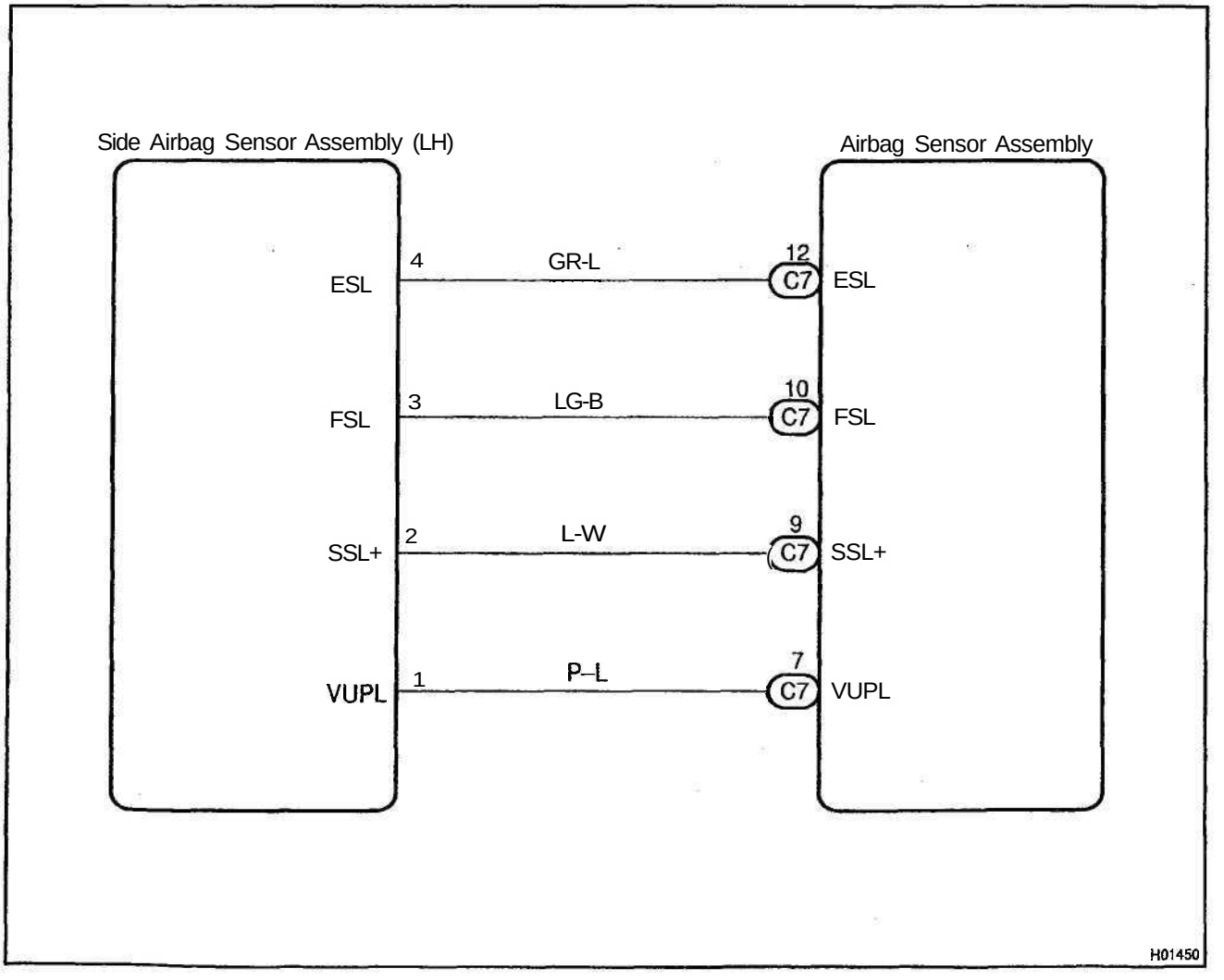

INSPECTION PROCEDURE

1	**Is DTC B1141/33 out put?**

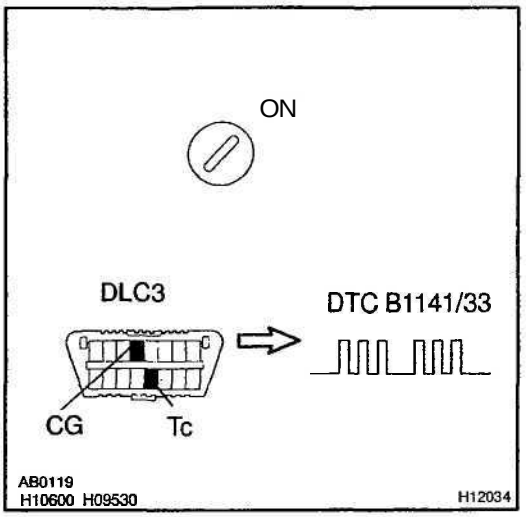

CHECK:

(a) Turn the ignition switch to ON, and wait at least for 20 seconds.
(b) Clear the DTC stored in memory (See step 5 on page DI–326).
(c) Turn the ignition switch to LOCK, and wait at least for 20 seconds.
(d) Turn the ignition switch to ON, and wait at least for 20 seconds.
(e) Check the DTC (See page DI–326).

HINT:

Codes other than code B1141/33 may be output at this time, but they are not relevant to this check.

YES → **The malfunctioning part can now be considered normal. To make sure of this, use the simulation method to check.**

NO

2	**Is connector of side airbag sensor assembly (LH) properly connected?**

3	**Prepare for inspection (See step 1 on page DI–471).**

4	**Check wire harness.**

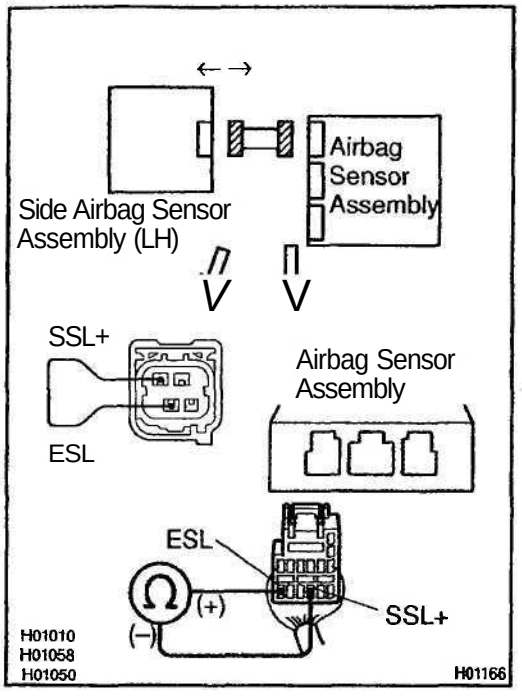

PREPARATION:

(a) Disconnect the side airbag sensor assembly (LH).

(b) Using a service wire, connect SSL+ and ESL of the connector (on the side airbag sensor assembly side) between the side airbag sensor assembly (LH) and the airbag sensor assembly.

CHECK:

For the connector (on the airbag sensor assembly side) between the side airbag sensor assembly (LH) and the airbag sensor assembly, measure the resistance between SSL+ and ESL

OK:

Resistance: Below 1 Ω

NG → **Repair or replace harness or connector between side airbag sensor assembly (LH) and airbag sensor assembly.**

OK

5	**Check wire harness.**

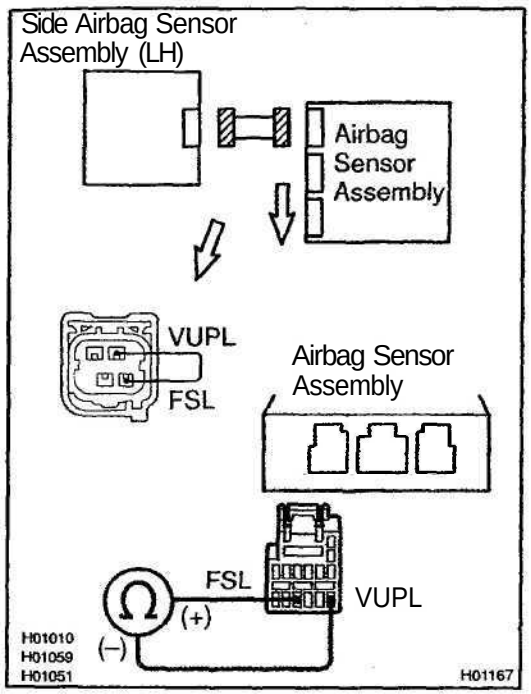

PREPARATION:

Using a service wire, connect VUPL and FSL of the connector (on the side airbag sensor assembly side) between the side airbag sensor assembly (LH) and the airbag sensor assembly.

CHECK:

For the connector (on the airbag sensor assembly side) between the side airbag sensor assembly (LH) and the airbag sensor assembly, measure the resistance between VUPL and FSL.

OK:

Resistance: Below 1 Ω

NG → **Repair or replace harness or connector between side airbag sensor assembly (LH) and airbag sensor assembly.**

OK

6	Check wire harness (to ground).

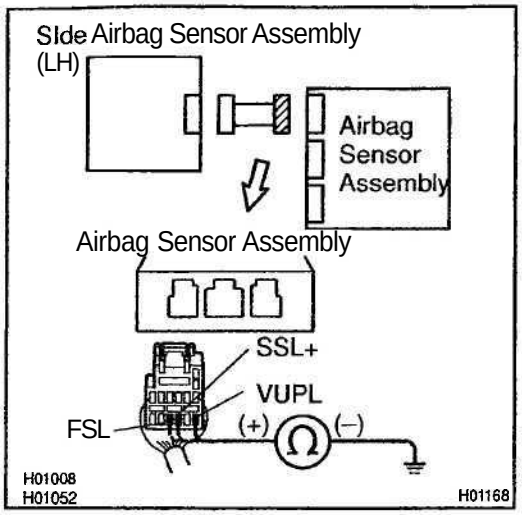

CHECK:

For the connector (on the airbag sensor assembly side) between the side airbag sensor assembly (LH) and the airbag sensor assembly, measure the resistance between body ground and each of SSL+, VUPL and FSL.

OK:

Resistance: 1 MΩ or Higher

NG → **Repair or replace harness or connector between side airbag sensor assembly (LH) and airbag sensor assembly.**

OK

7	Check wire harness (to B+).

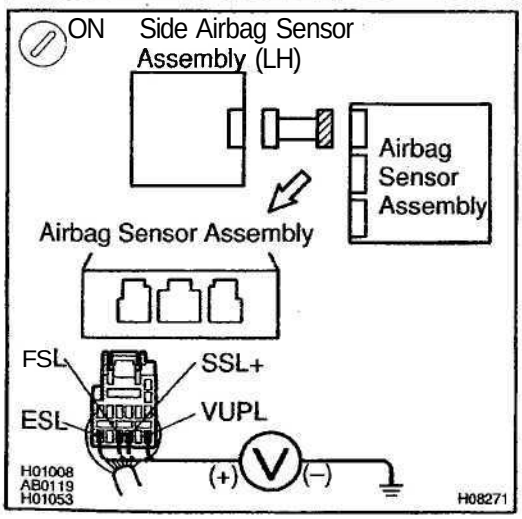

CHECK:

(a) Turn ignition switch to ON.

(b) For the connector (on the airbag sensor assembly side) between the side airbag sensor assembly (LH) and the airbag sensor assembly, measure the voltage between body ground and each of SSL+, ESL, VUPL and FSL.

OK:

Voltage: 0 V

NG → **Repair or replace harness or connector between side airbag sensor assembly (LH) and airbag sensor assembly.**

OK

8	Is DTC B1141/33 out put again?

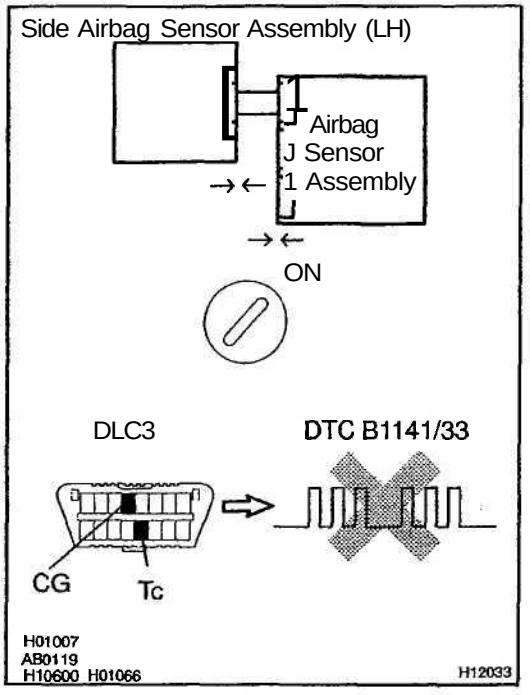

PREPARATION:

(a) Connect the connector to the side airbag sensor assembly (LH).
(b) Connect the connector to the airbag sensor assembly.
(c) Connect negative (-) terminal cable to the battery, and wait at least for 2 seconds.

CHECK:

(a) Turn the ignition switch to ON, and wait at least for 20 seconds.
(b) Clear the DTC stored in memory
(See step 5 on page DI–326).
(c) Turn the ignition switch to LOCK, and wait at least for 20 seconds.
(d) Turn the ignition switch to ON, and wait at least for 20 seconds.
(e) Check the DTC (See page DI-326).

OK:

DTC B1141/33 is not output.

HINT:

Codes other than code B1141/33 may be output at this time, but they are not relevant to this check.

NO	Go to step 9.

YES

From the results of the above inspection, the malfunctioning part can now be considered normal. To make sure of this, use the simulation method to check.

9	**Check airbag sensor assembly.**

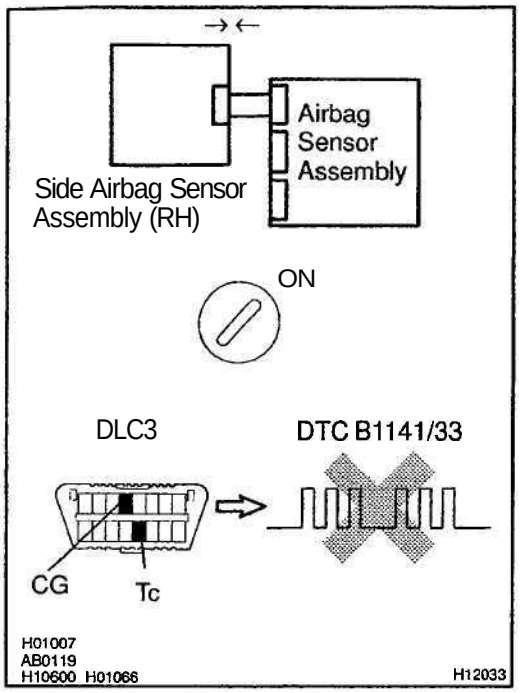

PREPARATION:

(a) Turn the ignition switch to LOCK.
(b) Disconnect negative (-) terminal cable from the battery, and wait at least for 90 seconds.
(c) Disconnect the side airbag sensor (LH) from the connector and connect the side airbag sensor (RH) to the connector.
(d) Connect negative (-) terminal cable to the battery, and wait at least for 2 seconds.

CHECK:

(a) Turn the ignition switch to ON, and wait at least for 20 seconds.
(b) Clear the DTC stored in memory (See step 5 on page DI–326).
(c) Turn the ignition switch to LOCK, and wait at least for 20 seconds.
(d) Turn the ignition switch to ON, and wait at least for 20 seconds.
(e) Check the DTC (See page DI-326).

OK:

DTC B1141/33 is not output.

HINT:

Codes other than code B1141/33 may be output at this time, but they are not relevant to this check.

NG	**Replace airbag sensor assembly.**

OK

10	Check side airbag sensor assembly (LH).

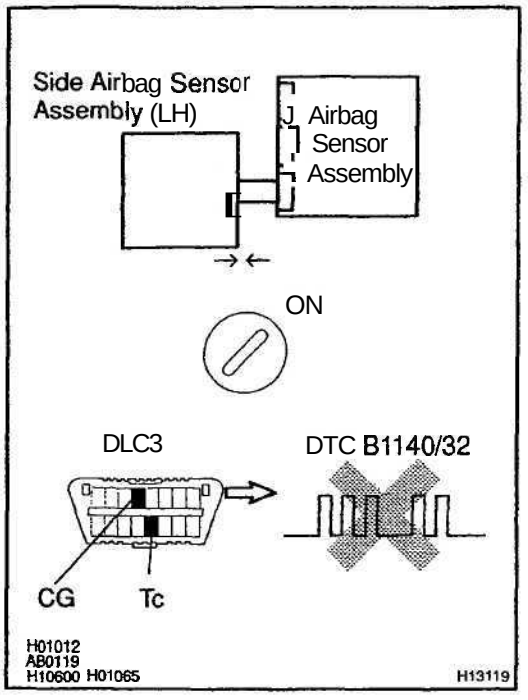

PREPARATION:

(a) Turn the ignition switch to LOCK.
(b) Disconnect negative (-) terminal cable from the battery, and wait at least for 90 seconds.
(c) Connect the side airbag sensor (LH) to the connector that the side airbag sensor (RH) was connected to.
(d) Connect negative (-) terminal cable to the battery, and wait at least for 2 seconds.

CHECK:

(a) Turn the ignition switch to ON, and wait at least for 20 seconds.
(b) Clear the DTC stored in memory (See step 5 on page DI-326).
(c) Turn the ignition switch to LOCK, and wait at least for 20 seconds.
(d) Turn the ignition switch to ON, and wait at least for 20 seconds.
(e) Check the DTC (See page DI-326).

OK:

DTC B1140/32 is not output.

HINT:

Codes other than code B1140/32 may be output at this time, but they are not relevant to this check.

NG → **Replace side airbag sensor assembly (LH).**

OK

From the results of the above inspection, the malfunctioning part can now be considered normal. To make sure of this, use the simulation method to check.

DTC	B1142/B1143/34	Door Side Airbag Sensor (RH) Malfunction

CIRCUIT DESCRIPTION

The door side airbag sensor (RH) circuit consists of the airbag sensor assembly and door side airbag sensor (RH).

For details of the function of each component, see OPERATION on page RS–2.

DTC B1142/B1143/34 is recorded when a malfunction is detected in the door side airbag sensor (RH) circuit.

DTC No.	DTC Detecting Condition	Trouble Area
B1142/B1143/34	• Door side airbag sensor (RH) malfunction	• Door side airbag sensor (RH) • Airbag sensor assembly • Instrument panel wire harness • RH front door wire harness

WIRING DIAGRAM

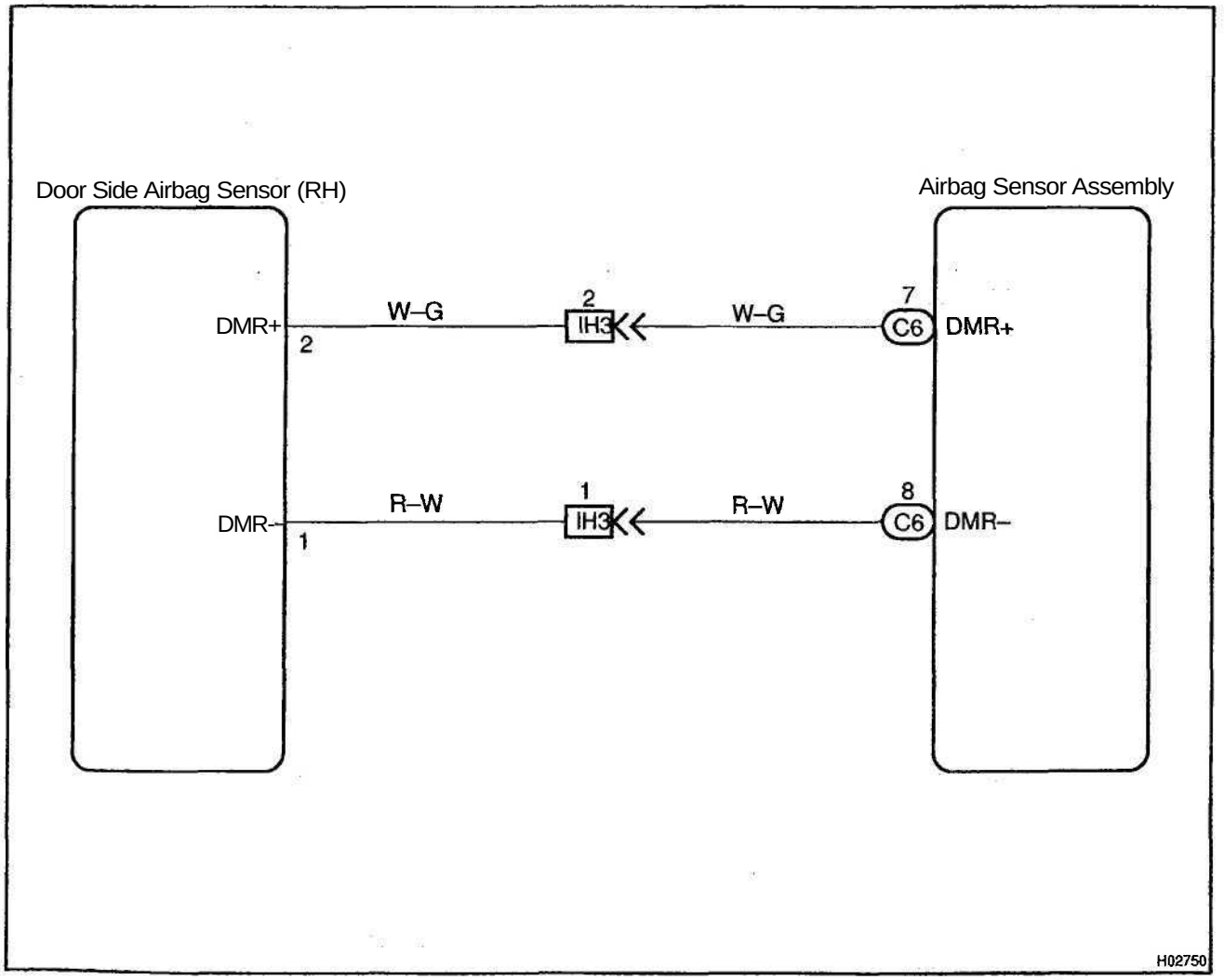

INSPECTION PROCEDURE

1	**Prepare for inspection (See step 1 on page DI-471).**

2	**Check** wire harness (to **B+).**

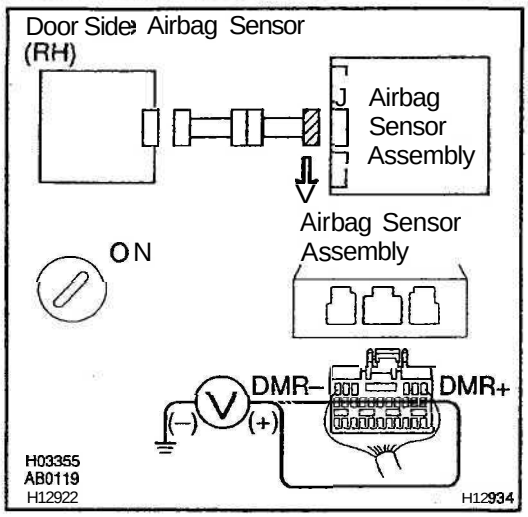

CHECK:
(a) Turn the ignition switch to ON.
(b) For the connector (on the airbag sensor assembly side) between the door side airbag sensor (RH) and the airbag sensor assembly, measure the voltage between body ground and each of DMR+ and DMR-.

OK:

Voltage: Below 1 V

NG → Go to step 8.

OK

3	Check wire harness (to **ground).**

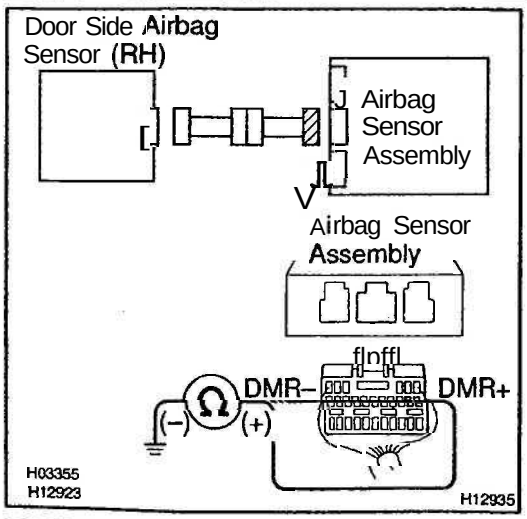

CHECK:
For the connector (on the airbag sensor assembly side) between the door side airbag sensor (RH) and the airbag sensor assembly, measure the resistance between body ground and each of DMR+ and DMR-.

OK:

Resistance: 1 MΩ or Higher

NG → Go to step 9.

OK

4	Check wire harness.

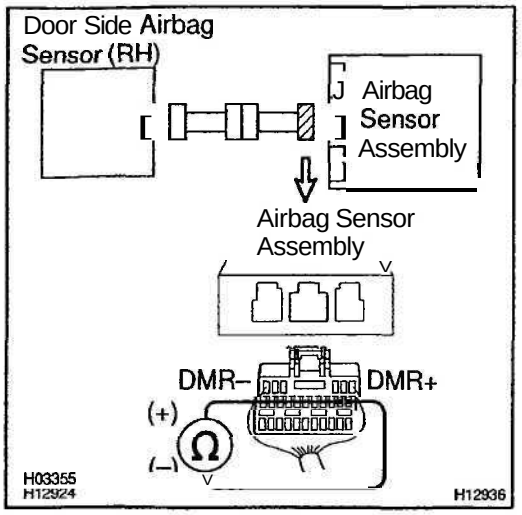

CHECK:
For the connector (on the airbag sensor assembly side) between the door side airbag sensor (RH) and the airbag sensor assembly, measure the resistance between DMR+ and DMR-.
OK:
Resistance: 1 MΩ or Higher

NG → Go to step 10.

OK

5	**Check wire harness.**

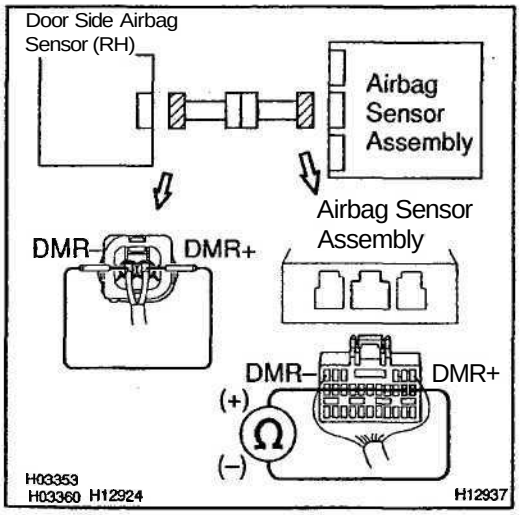

PREPARATION:
Using a service wire, connect DMR+ and DMR- of the connector (on the door side airbag sensor (RH) side) between the airbag sensor assembly and the door side airbag sensor (RH).
CHECK:
For the connector (on the airbag sensor assembly side) between the door side airbag sensor (RH) and the airbag sensor assembly, measure the resistance between DMR+ and DMR-.
OK:
Resistance: Below 1 Ω

NG → Go to step 11.

OK

6	**Check door side airbag sensor (RH).**

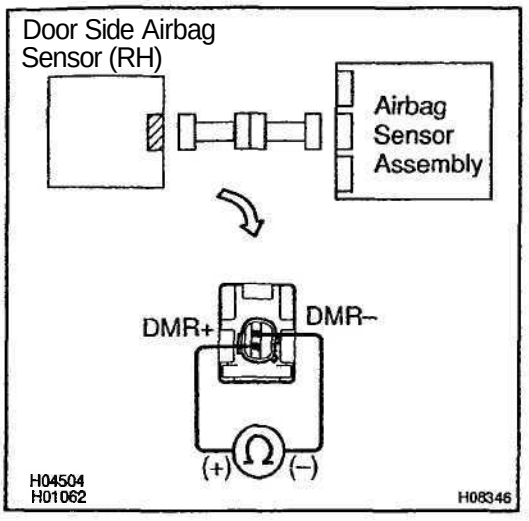

CHECK:

For the connector of the door side airbag sensor (RH), measure the resistance between DMR+ and DMR–.

OK:

Resistance: 300 – **1500** Ω

NG → **Replace door side airbag sensor (RH).**

OK

7	Check airbag sensor assembly.

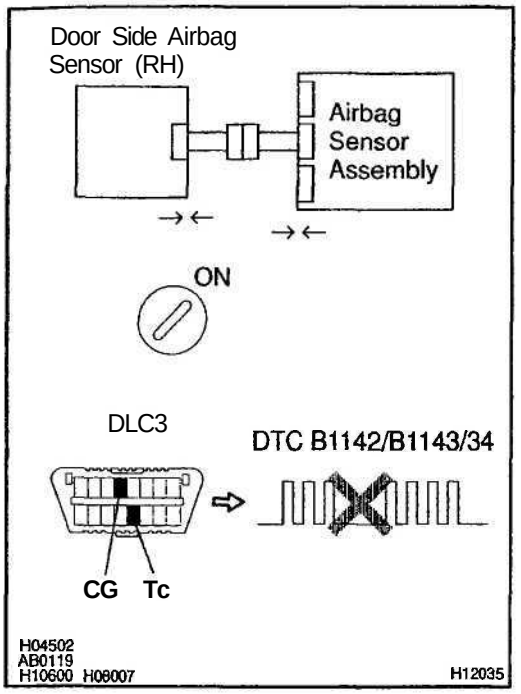

PREPARATION:

(a) Turn the ignition switch to LOCK.
(b) Disconnect negative (-) terminal cable from the battery, and wait at least for 90 seconds.
(c) Connect the door side airbag sensor (RH) connector and airbag sensor assembly connector.
(d) Connect negative (-) terminal cable to the battery, and wait at least for 2 seconds.

CHECK:

(a) Turn the ignition switch to ON, and wait at least for 20 seconds.
(b) Clear the DTC stored in memory (See page DI–326).
(c) Turn the ignition switch to LOCK, and wait at least for 20 seconds.
(d) Turn the ignition switch to ON, and wait at least for 20 seconds.
(e) Check the DTC (See page DI-326).

OK:

DTC 34 is not output.

HINT:

Codes other than code 34 may be output at this time, but they are not relevant to this check.

NG → **Replace airbag sensor assembly.**

OK

From the results of the above inspection, the malfunctioning part can now be considered normal. To make sure of this, use the simulation method to check.

8	Check RH front door wire harness (to B+).

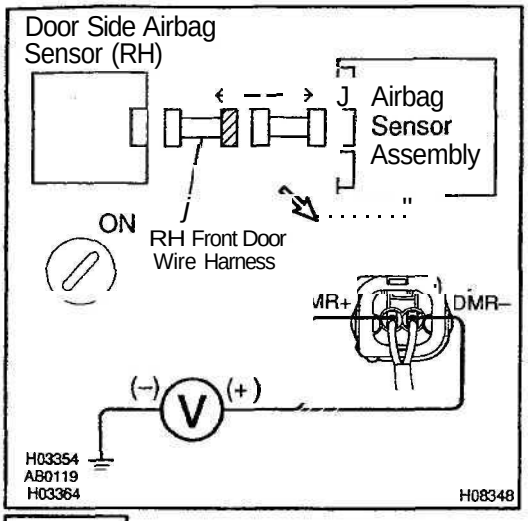

PREPARATION:
Disconnect the RH front door wire harness connector on the airbag sensor assembly side.
CHECK:
(a) Turn the ignition switch to ON.
(b) For the connector (on the RH front door wire harness side) between the airbag sensor assembly and the RH front door wire harness, measure the voltage between body ground and each of DMR+ and DMR-.
OK:
Voltage: Below 1 V

NG → Repair or replace RH **front** door wire harness.

OK

Repair or replace harness or connector between airbag sensor assembly and RH front door wire harness.

9	**Check RH front door wire harness (to ground).**

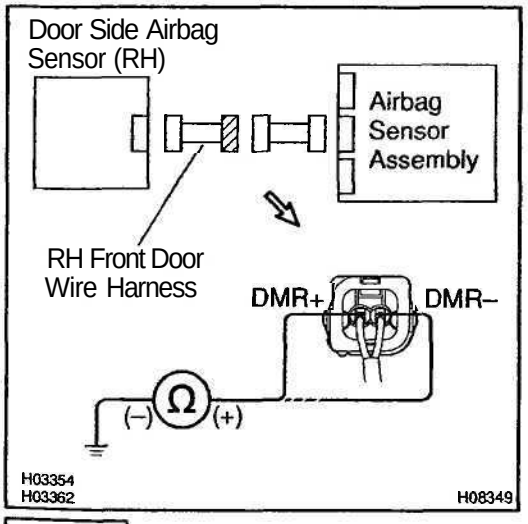

PREPARATION:
Disconnect the RH front door wire harness connector on the airbag sensor assembly side.
CHECK:
For the connector (on the RH front door wire harness side) between the airbag sensor assembly and the RH front door wire harness, measure the resistance between body ground and each of DMR+ and DMR-.
OK:
Resistance: 1 MΩ or Higher

NG → **Repair or replace RH front door wire harness.**

OK

Repair or replace harness or connector between airbag sensor assembly and RH front door wire harness.

10	Check RH front door wire harness.

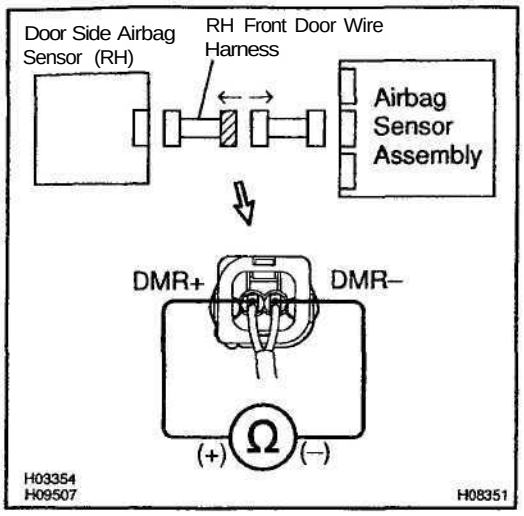

PREPARATION:

Disconnect the RH front door wire harness connector on the airbag sensor assembly side.

CHECK:

For the connector (on the RH front door wire harness side) between the airbag sensor assembly and the RH front door wire harness, measure the resistance between DMR+ and DMR-.

OK:

Resistance: 1 MΩ or Higher

NG → **Repair or replace RH front door wire harness.**

OK

Repair or replace harness or connector between airbag sensor assembly and RH front door wire harness.

11	**Check RH front door wire harness.**

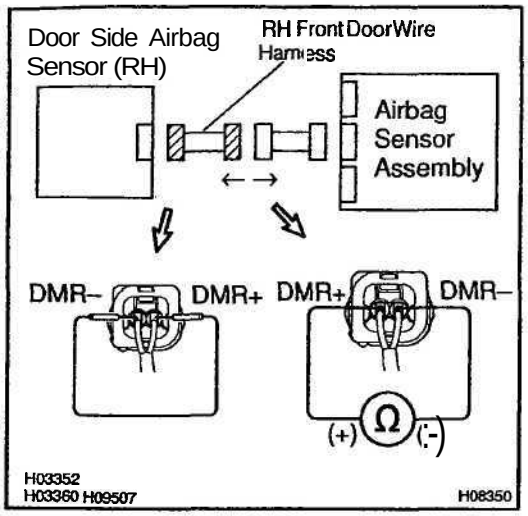

PREPARATION:

(a) Disconnect the RH front door wire harness connector on the airbag sensor assembly side.

(b) Using a service wire, connect DMR+ and DMR- of the connector (on the RH front door wire harness side) between the RH front door wire harness and the door side airbag sensor (RH).

CHECK:

For the connector (on the RH front door wire harness side) between the airbag sensor assembly and the RH front door wire harness, measure the resistance between DMR+ and DMR-.

OK:

Resistance: Below 1 n

NG → **Repair or replace RH front door wire harness.**

OK →

Repair or replace harness or connector between airbag sensor assembly and RH front door wire harness.

DTC	B1144/B1145/35	Door Side Airbag Sensor (LH) Malfunction

CIRCUIT DESCRIPTION

The door side airbag sensor (LH) circuit consists of the airbag sensor assembly and door side airbag sensor (LH).

For details of the function of each component, see OPERATION on page RS–2.

DTC B1144/B1145/35 is recorded when malfunction is detected in the door side airbag sensor (LH) circuit.

DTC No.	DTC Detecting Condition	Trouble Area
B1144/B1145/35	• Door side airbag sensor (LH) malfunction	• Door side airbag sensor (LH) • Airbag sensor assembly • Instrument panel wire harness • LH front door wire harness

WIRING DIAGRAM

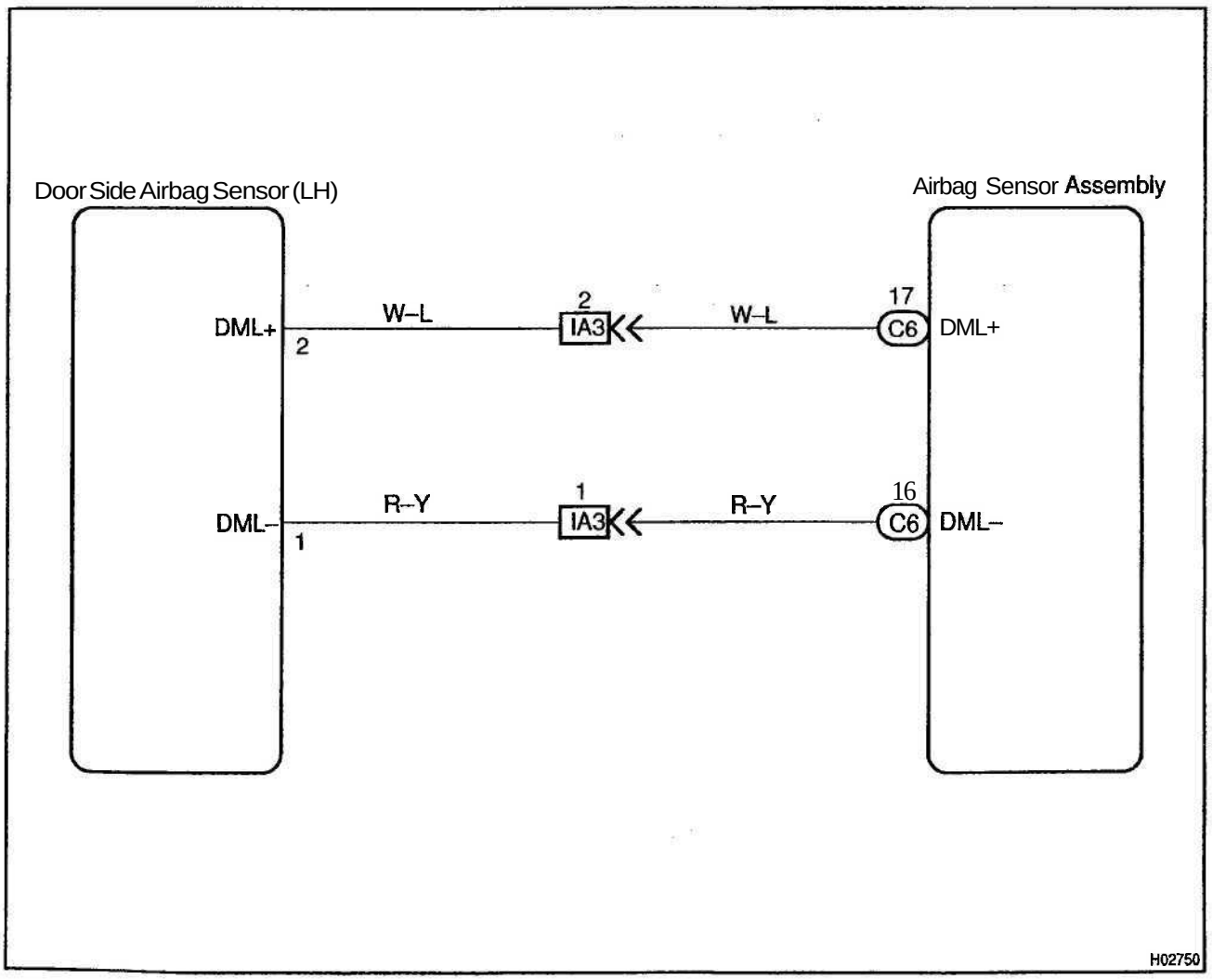

INSPECTION PROCEDURE

1	**Prepare for inspection (See step 1 on page DI-471).**

2	**Check wire harness (to B+).**

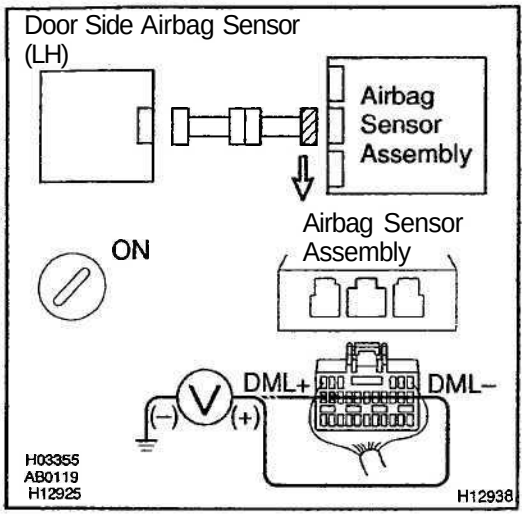

CHECK:

(a) Turn the ignition switch to ON.

(b) For the connector (on the airbag sensor assembly side) between the door side airbag sensor (LH) and the airbag sensor assembly, measure the voltage between body ground and each of DML+ and DML-.

OK:

Voltage: Below 1 V

NG → **Go to step 8.**

OK

3	**Check** wire harness (to ground).

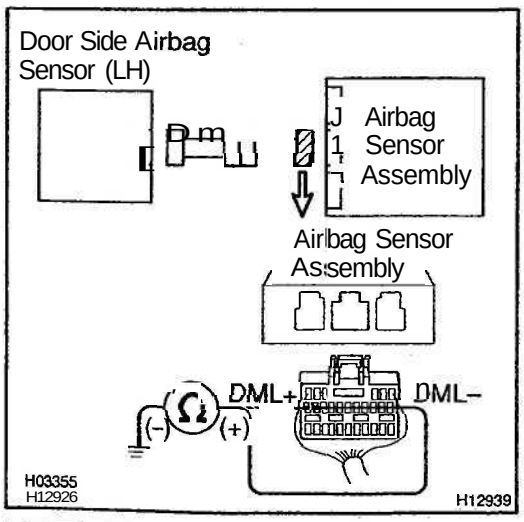

CHECK:

For the connector (on the airbag sensor assembly side) between the door side airbag sensor (LH) and the airbag sensor assembly, measure the resistance between body ground and each of DML+ and DML-.

OK:

Resistance: 1 Ma or Higher

NG → Go to step 9.

OK

4	Check wire harness.

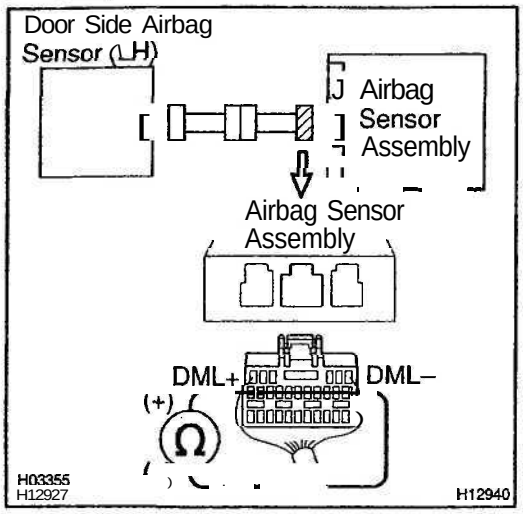

CHECK:
For the connector (on the airbag sensor assembly side) between the door side airbag sensor (LH) and the airbag sensor assembly, measure the resistance between DML+ and DML-.
OK:
Resistance: 1 MΩ or Higher

NG → Go to step 10.

OK

5	**Check wire harness.**

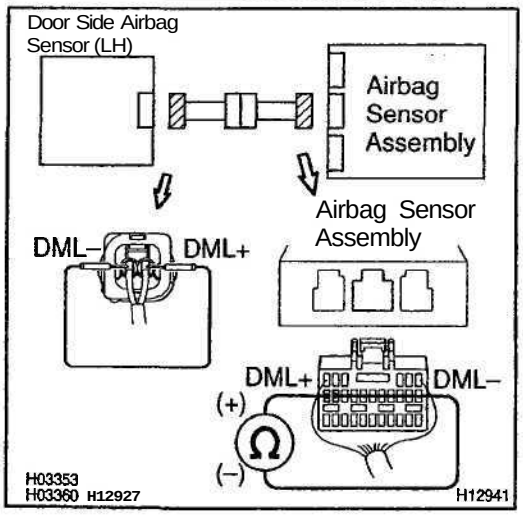

PREPARATION:
Using a service wire, connect DML+ and DML– of the connector (on the door side airbag sensor (LH) side) between the airbag sensor assembly and the door side airbag sensor (LH).
CHECK:
For the connector (on the airbag sensor assembly side) between the door side airbag sensor (LH) and the airbag sensor assembly, measure the resistance between DML+ and DML-.
OK:
Resistance: Below 1 Ω

NG → **Go to step 11.**

OK

6	**Check door side airbag sensor (LH).**

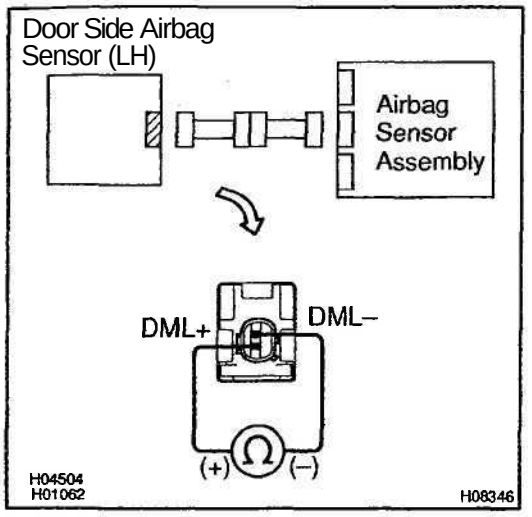

CHECK:

For the connector of the door side airbag sensor (LH), measure the resistance between DML+ and DML-.

OK:

Resistance: 300 – 1500 Ω

NG → **Replace door side airbag sensor (LH).**

OK

7	Check airbag sensor assembly.

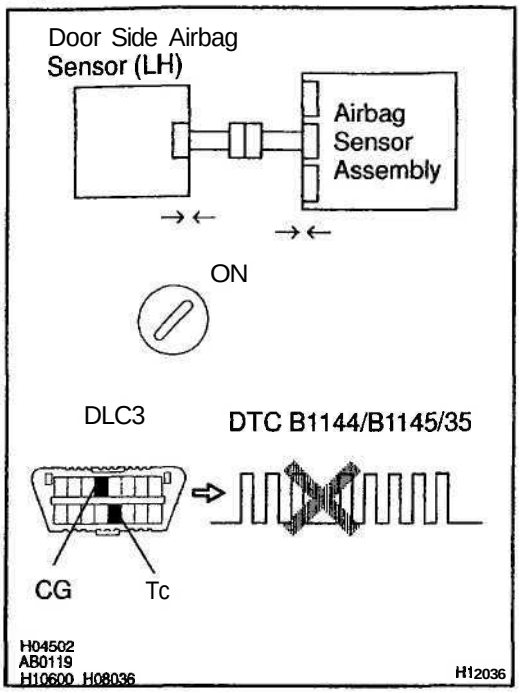

PREPARATION;

(a) Turn the ignition switch to LOCK.
(b) Disconnect negative (-) terminal cable from the battery, and wait at least for 90 seconds.
(c) Connect the door side airbag sensor (LH) connector and airbag sensor assembly connector.
(d) Connect negative (-) terminal cable to the battery, and wait at least for 2 seconds.

CHECK:

(a) Turn the ignition switch to ON, and wait at least for 20 seconds.
(b) Clear the DTC stored in memory (See page DI–326).
(c) Turn the ignition switch to LOCK, and wait at least for 20 seconds.
(d) Turn the ignition switch to ON, and wait at least for 20 seconds.
(e) Check the DTC (See page DI-326).

OK:

DTC 35 is not output.

HINT:
Codes other than code 35 may be output at this time, but they are not relevant to this check.

NG → **Replace airbag sensor assembly.**

OK

From the results of the above inspection, the malfunctioning part can now be considered normal. To make sure of this, use the simulation method to check.

8	**Check LH front door wire harness (to B+).**

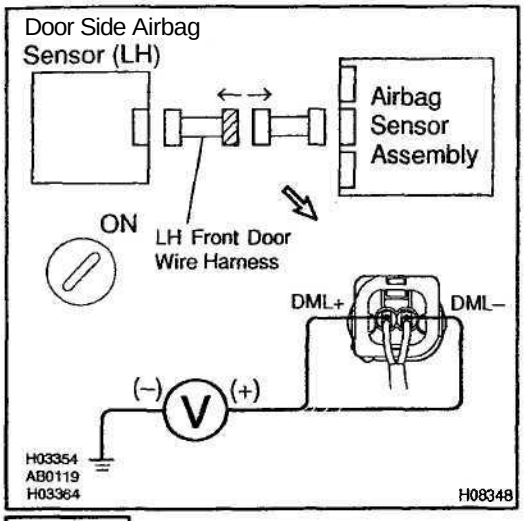

PREPARATION:

Disconnect the LH front door wire harness connector on the airbag sensor assembly side.

CHECK:

(a) Turn the ignition switch to ON.

(b) For the connector (on the LH front door wire harness side) between the airbag sensor assembly and the LH front door wire harness, measure the voltage between body ground and each of DML+ and DML-.

OK:

Voltage: Below 1 V

NG	**Repair or replace LH front door wire harness.**

OK

Repair or replace harness or connector between airbag sensor assembly and LH front door wire harness.

9	**Check LH front door wire harness (to ground).**

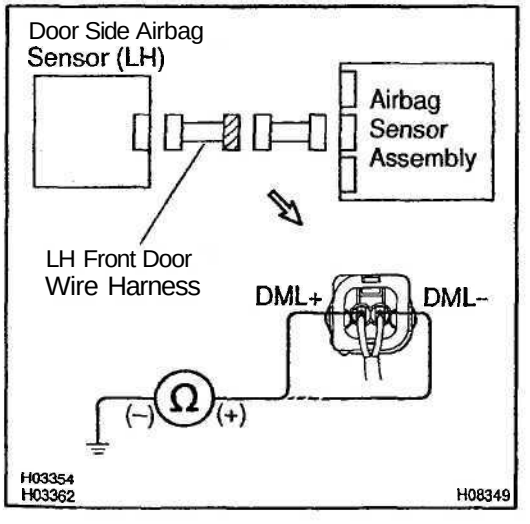

PREPARATION:

Disconnect the LH front door wire harness connector on the airbag sensor assembly side.

CHECK:

For the connector (on the LH front door wire harness side) between the airbag sensor assembly and the LH front door wire harness, measure the resistance between body ground and each of DML+ and DML-.

OK:

Resistance: 1 MΩ or Higher

NG	**Repair or replace LH front door wire harness.**

OK

Repair or replace harness or connector between airbag sensor assembly and LH front door wire harness.

10	Check LH front door wire harness.

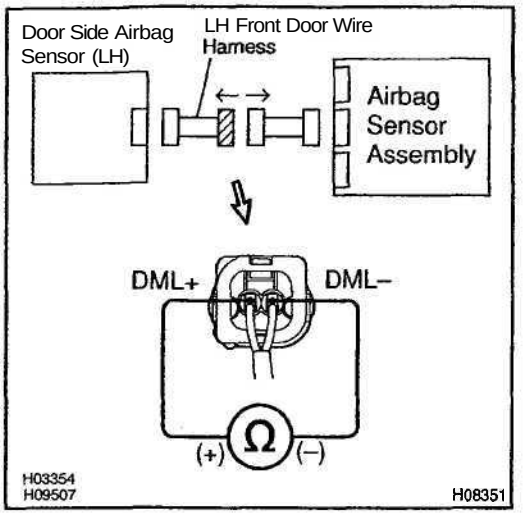

PREPARATION:

Disconnect the LH front door wire harness connector on the airbag sensor assembly side.

CHECK:

For the connector (on the LH front door wire harness side) between the airbag sensor assembly and the LH front door wire harness, measure the resistance between DML+ and DML–.

OK:

Resistance: 1 MΩ or Higher

NG → **Repair or replace LH front door wire harness.**

OK

Repair or replace harness or connector between airbag sensor assembly and LH front door wire harness.

11	Check LH front door wire harness.

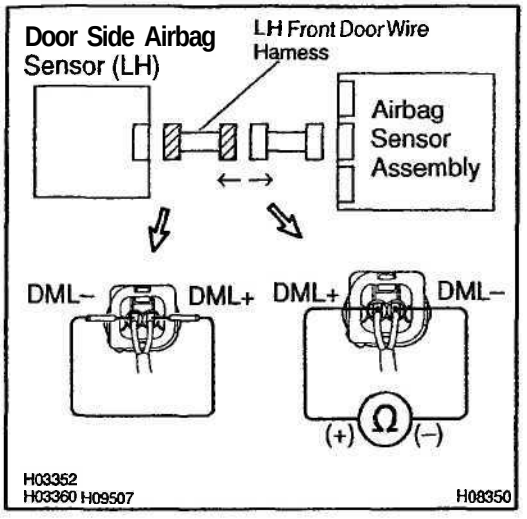

PREPARATION:

(a) Disconnect the LH front door wire harness connector on the airbag sensor assembly side.

(b) Using a service wire, connect DML+ and DML– of the connector (on the LH front door wire harness side) between the LH front door wire harness and the door side airbag sensor (LH).

CHECK:

For the connector (on the LH front door wire harness side) between the airbag sensor assembly and the LH front door wire harness, measure the resistance between DML+ and DML–.

OK:

Resistance: Below 1 Ω

NG → **Repair or replace LH front door wire harness.**

OK →

Repair or replace harness or connector between airbag sensor assembly and LH front door wire harness.

D6PW-01

DTC	B1156/B1157/15	Front Airbag Sensor (RH) Malfunction

CIRCUIT DESCRIPTION

The front airbag sensor (RH) circuit consists of the airbag sensor assembly and front airbag sensor (RH). For details of the function of each component, see OPERATION on page RS–2.

DTC B1156/B1157/15 is recorded when a malfunction is detected in the front airbag sensor (RH) circuit.

DTC No.	DTC Detecting Condition	Trouble Area
B1156/B1157/15	• Front airbag sensor (RH) malfunction	• Front airbag sensor (RH) • Airbag sensor assembly • Wire harness • Engine room No. 2 wire harness

WIRING DIAGRAM

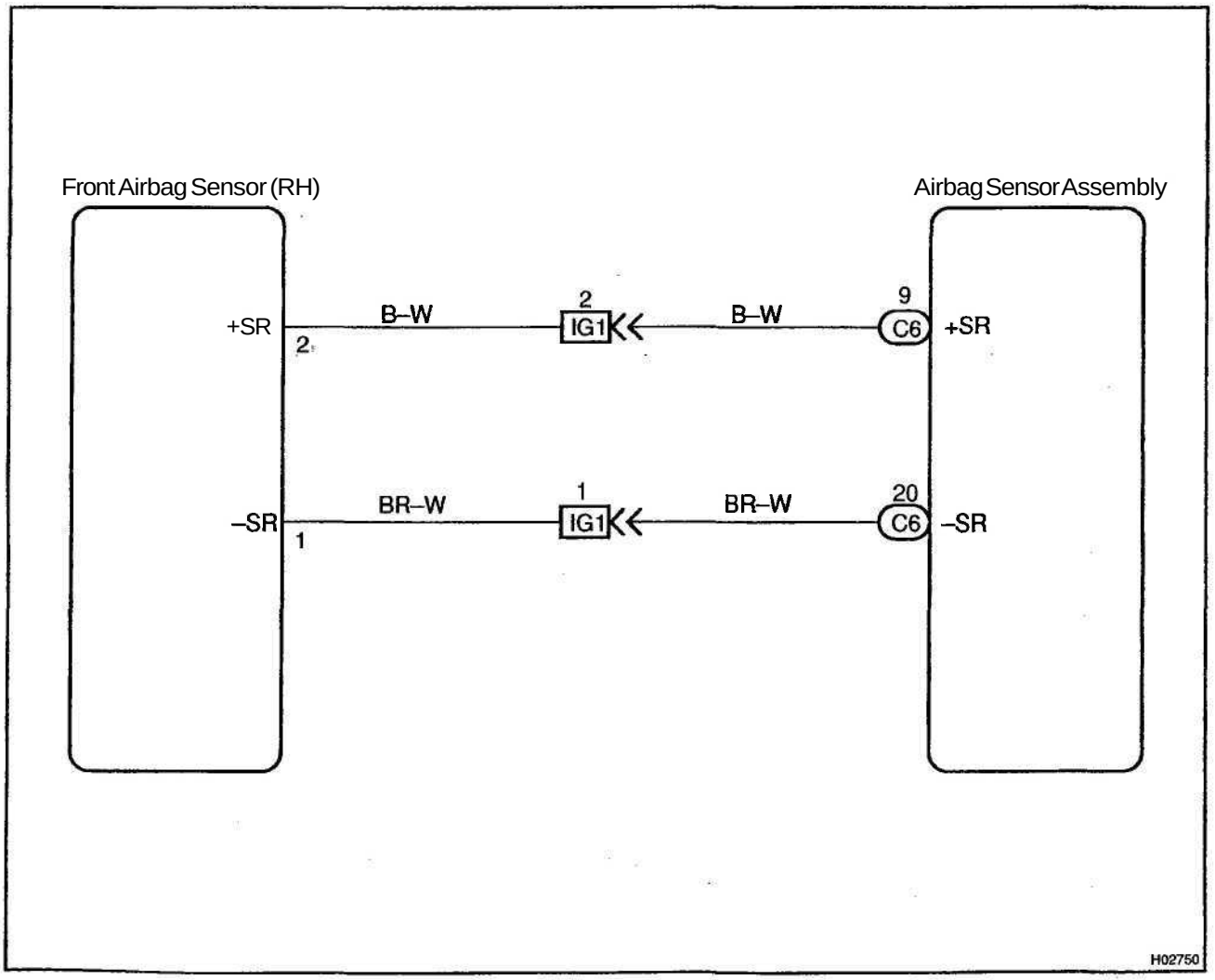

INSPECTION PROCEDURE

1	**Prepare for inspection (See step 1 on page DI–471).**

2	**Check wire harness (to B+).**

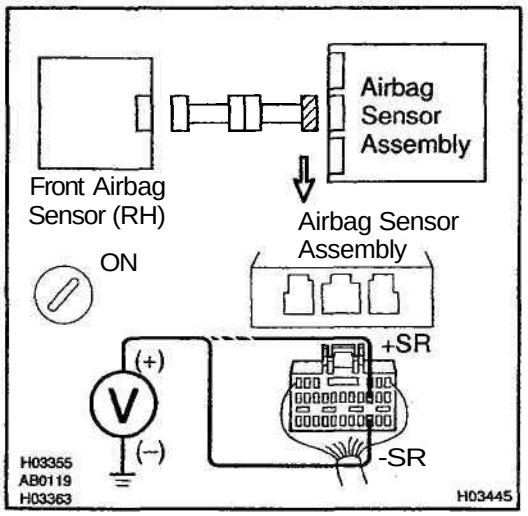

CHECK:

(a) Turn the ignition switch to ON.

(b) For the connector (on the airbag sensor assembly side) between the front airbag sensor (RH) and the airbag sensor assembly, measure the voltage between body ground and each of +SR and -SR.

OK:

Voltage: Below 1 V

NG → **Go to step 8.**

OK

3	**Check wire harness (to ground).**

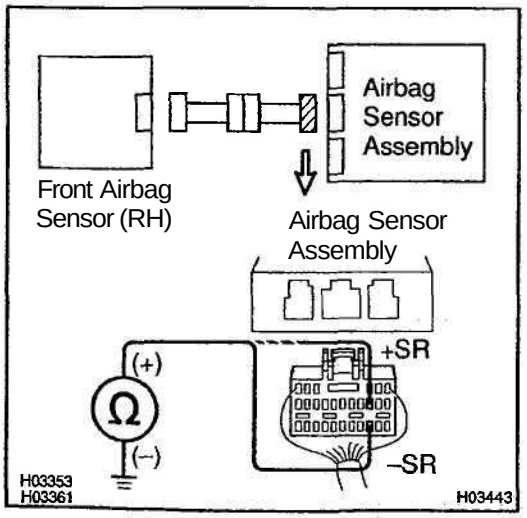

CHECK:

For the connector (on the airbag sensor assembly side) between the front airbag sensor (RH) and the airbag sensor assembly, measure the resistance between body ground and each of +SR and -SR.

OK:

Resistance: 1 MΩ or Higher

NG → **Go to step 9.**

OK

4	Check wire harness.

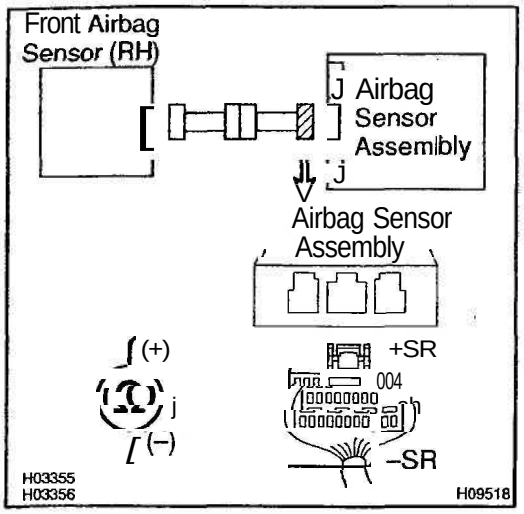

CHECK:
For the connector (on the airbag sensor assembly side) between the front airbag sensor (RH) and the airbag sensor assembly, measure the resistance between +SR and -SR.
OK:
Resistance: 1 MΩ or Higher

NG → Go to step 10.

OK

5	**Check wire harness.**

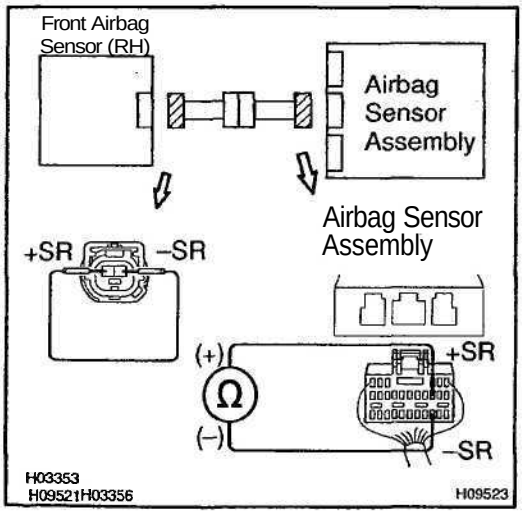

PREPARATION:
Using a service wire, connect +SR and -SR of the connector (on the front airbag sensor (RH) side) between the airbag sensor assembly and the front airbag sensor (RH).
CHECK:
For the connector (on the airbag sensor assembly side) between the front airbag sensor (RH) and the airbag sensor assembly, measure the resistance between +SR and –SR.
OK:
Resistance: Below 1 Ω

NG → Go to step 11.

OK

6	**Check front airbag sensor (RH).**

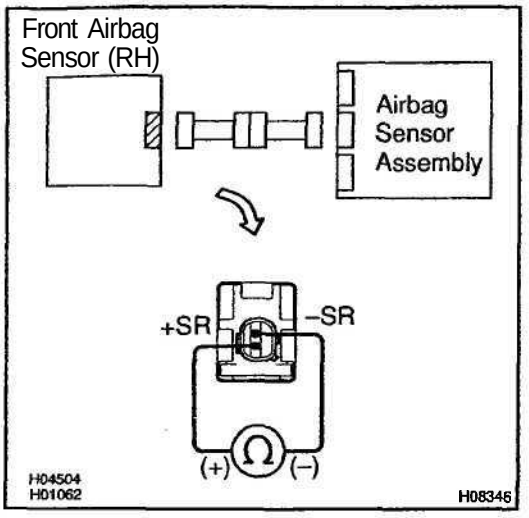

CHECK:

For the connector of the front airbag sensor (RH), measure the resistance between +SR and -SR.

OK:

Resistance: 300 – 1500 Ω

NG → **Replace front airbag sensor (RH).**

OK

7	Check airbag sensor assembly.

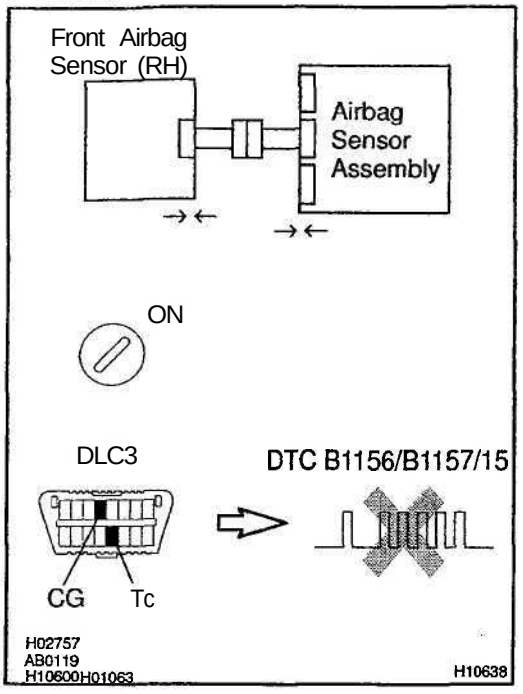

PREPARATION:

(a) Turn the ignition switch to LOCK.
(b) Disconnect negative (-) terminal cable from the battery, and wait at least for 90 seconds.
(c) Connect the front airbag sensor (RH) connector and airbag sensor assembly connector.
(d) Connect negative (-) terminal cable to the battery, and wait at least for 2 seconds.

CHECK:

(a) Turn the ignition switch to ON, and wait at least for 20 seconds.
(b) Clear the DTC stored in memory (See page DI-326).
(c) Turn the ignition switch to LOCK, and wait at least for 20 seconds.
(d) Turn the ignition switch to ON, and wait at least for 20 seconds.
(e) Check the DTC (See page DI-326).

OK:

DTC B1156/B1157/15 is not output.

HINT:

Codes other than code B1156/B1157/15 may be output at this time, but they are not relevant to this check.

NG → **Replace airbag sensor assembly.**

OK

From the results of the above inspection, the malfunctioning part can now be considered normal. To make sure of this, use the simulation method to check.

8	**Check engine room No. 2 wire harness (to B+).**

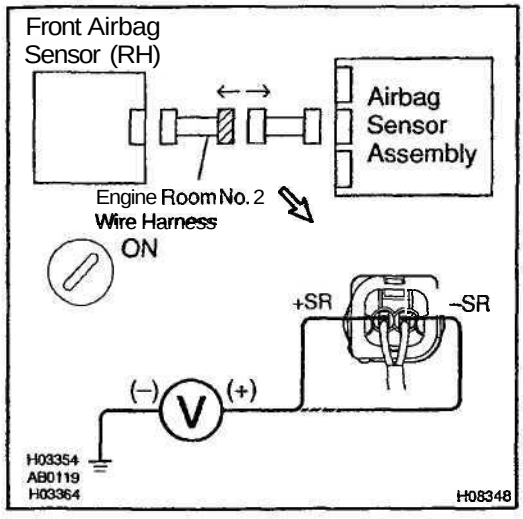

PREPARATION:
Disconnect the engine room No. 2 wire harness connector on the airbag sensor assembly side.

CHECK:
(a) Turn the ignition switch to ON.
(b) For the connector (on the RH front door wire harness side) between the airbag sensor assembly and the engine room No. 2 wire harness, measure the voltage between body ground and each of +SR and –SR.

OK:
Voltage: Below 1 V

NG	**Repair or replace engine room No. 2 wire harness.**

OK

Repair or replace harness or connector between airbag sensor assembly and engine room No. 2 wire harness.

9	Check engine room No. 2 wire harness (to ground).

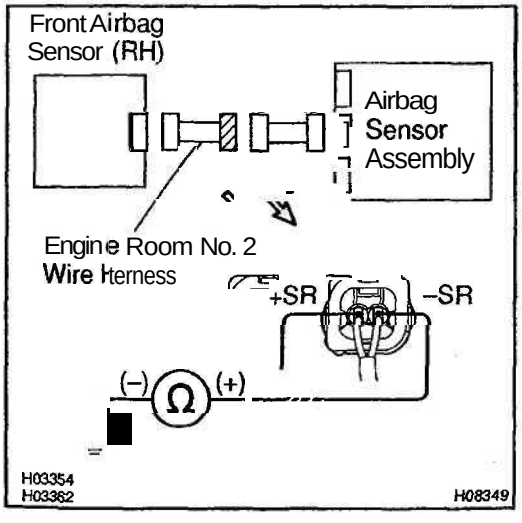

PREPARATION:
Disconnect the engine room No. 2 wire harness connector on the airbag sensor assembly side.

CHECK:
For the connector (on the engine room No. 2 wire harness side) between the airbag sensor assembly and the engine room No. 2 wire harness, measure the resistance between body ground and each of +SR and -SR.

OK:
Resistance: 1 MΩ or Higher

NG	Repair or replace engine room No. 2 wire harness.

OK

Repair or replace harness or connector between airbag sensor assembly and engine room No. 2 wire harness.

10	Check engine room No. 2 wire harness.

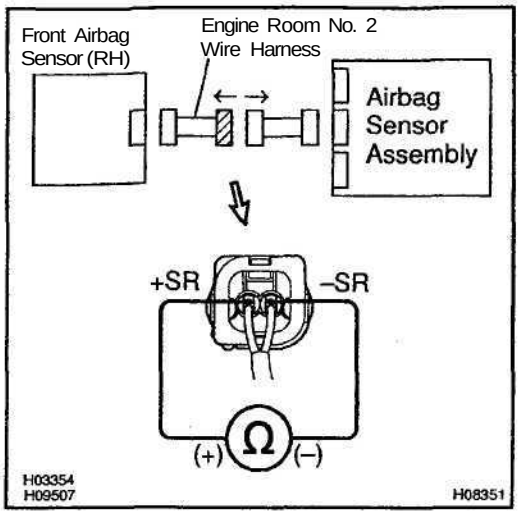

PREPARATION:

Disconnect the engine room No. 2 wire harness connector on the airbag sensor assembly side.

CHECK:

For the connector (on the engine room No. 2 wire harness side) between the airbag sensor assembly and the engine room No. 2 wire harness, measure the resistance between +SR and -SR.

OK:

Resistance: 1 MΩ or Higher

NG → **Repair or replace engine room No. 2 wire harness.**

OK

Repair or replace harness or connector between airbag sensor assembly and engine room No. 2 wire harness.

11	**Check engine room No. 2 wire harness.**

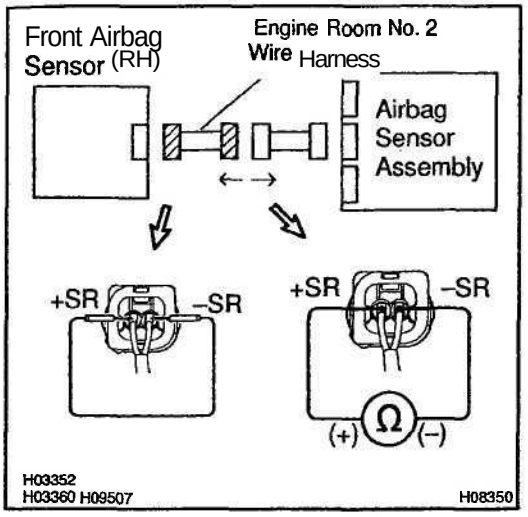

PREPARATION:

(a) Disconnect the engine room No. 2 wire harness connector on the airbag sensor assembly side.

(b) Using a service wire, connect +SR and –SR of the connector (on the engine room No. 2 wire harness side) between the engine room No. 2 wire harness and the front airbag sensor (RH).

CHECK:

For the connector (on the engine room No. 2 wire harness side) between the airbag sensor assembly and the engine room No. 2 wire harness, measure the resistance between +SR and -SR.

OK:

Resistance: Below 1 Ω

NG → **Repair or replace engine room No. 2 wire harness.**

OK

Repair or replace harness or connector between airbag sensor assembly and engine room No. 2 wire harness.

D16FX-01

DTC	B1158/B1159/16	Front Airbag Sensor (LH) Malfunction

CIRCUIT DESCRIPTION

The front airbag sensor (LH) circuit consists of the airbag sensor assembly and front airbag sensor (LH). For details of the function of each component, see OPERATION on page RS–2.
DTC B1158/B1159/16 is recorded when malfunction is detected in the front airbag sensor (LH) circuit.

DTC No.	DTC Detecting Condition	Trouble Area
B1158/B1159/16	• Front airbag sensor (LH) malfunction	• Front airbag sensor (LH) • Airbag sensor assembly • Wire harness • Engine room main wire harness

WIRING DIAGRAM

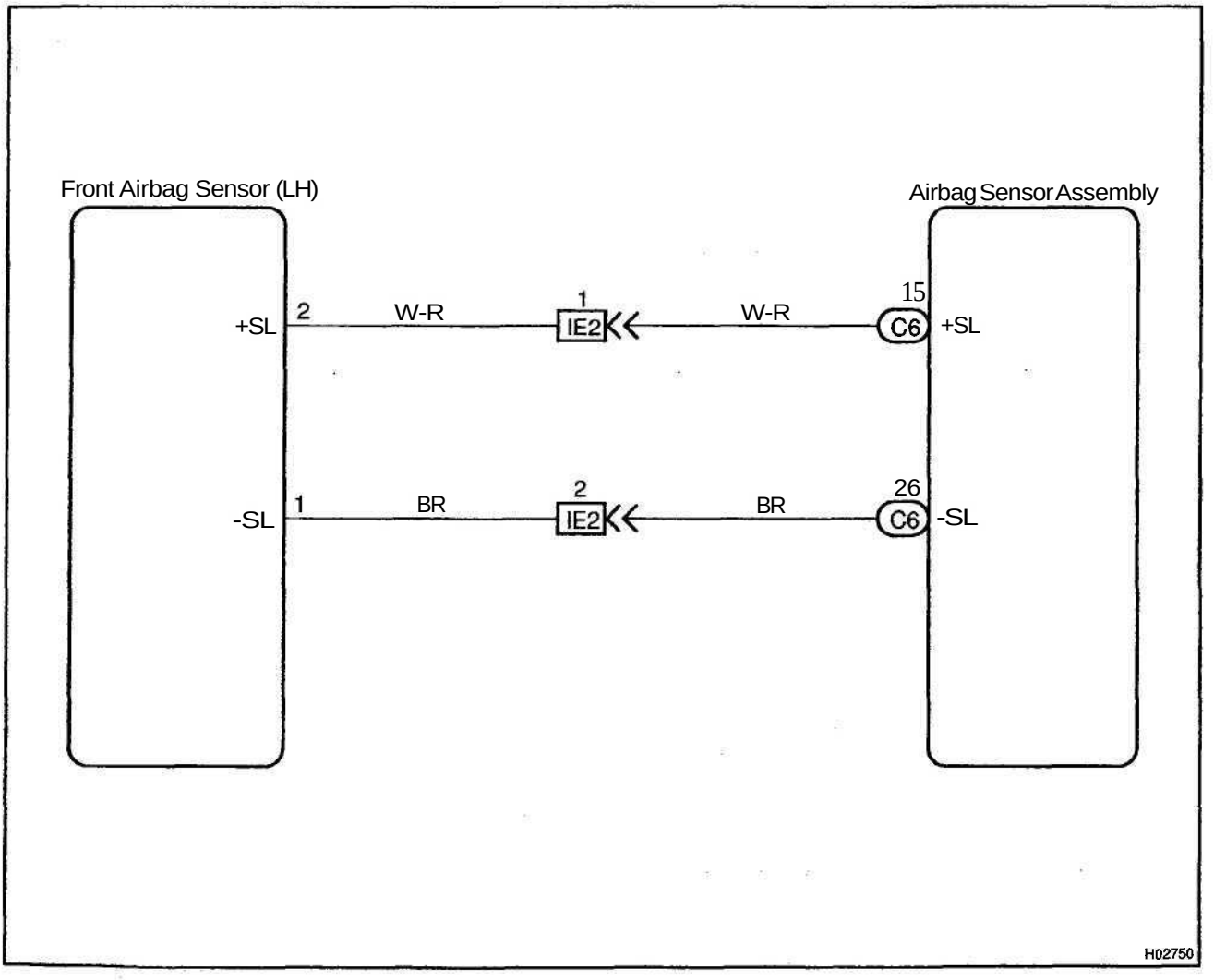

INSPECTION PROCEDURE

1	**Prepare for inspection (See step 1 on page DI–471).**

2	**Check wire harness (to B+).**

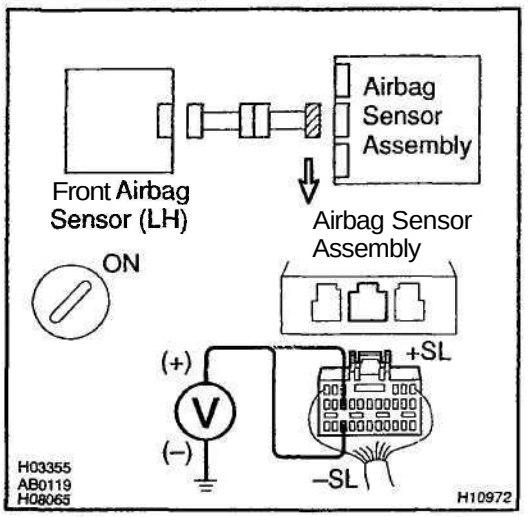

CHECK:

(a) Turn the ignition switch to ON.

(b) For the connector (on the airbag sensor assembly side) between the front airbag sensor (LH) and the airbag sensor assembly, measure the voltage between body ground and each of +SL and -SL.

OK:

Voltage: Below 1 V

NG	**Go to step *B*.**

OK

3	**Check wire harness (to ground).**

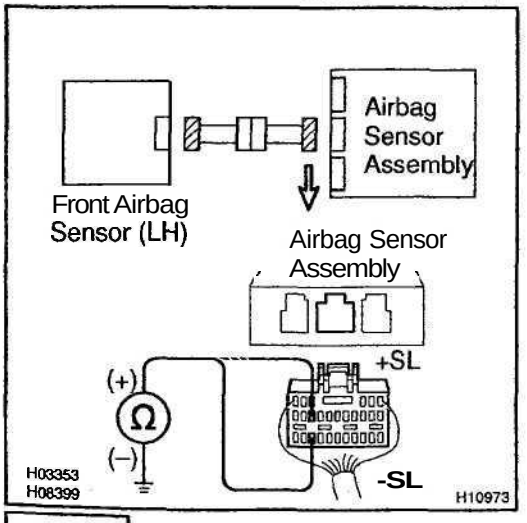

CHECK:

For the connector (on the airbag sensor assembly side) between the front airbag sensor (LH) and the airbag sensor assembly, measure the resistance between body ground and each of +SL and -SL.

OK:

Resistance: 1 MΩ or Higher

NG	**Go to step 9.**

OK

4	Check wire harness.

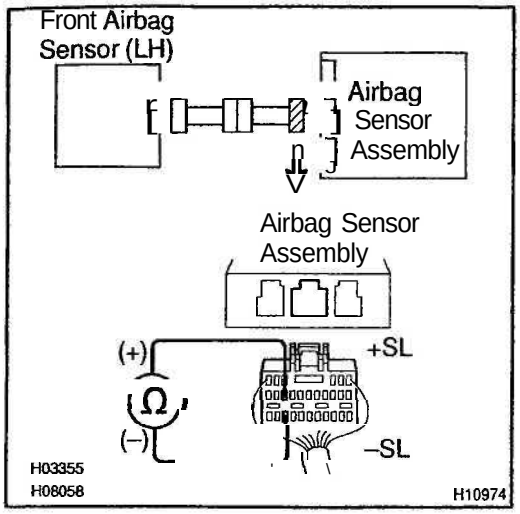

CHECK:

For the connector (on the airbag sensor assembly side) between the front airbag sensor (LH) and the airbag sensor assembly, measure the resistance between +SL and -SL.

OK:

Resistance: 1 MΩ or Higher

NG → Go to step 10.

OK

5	**Check wire harness.**

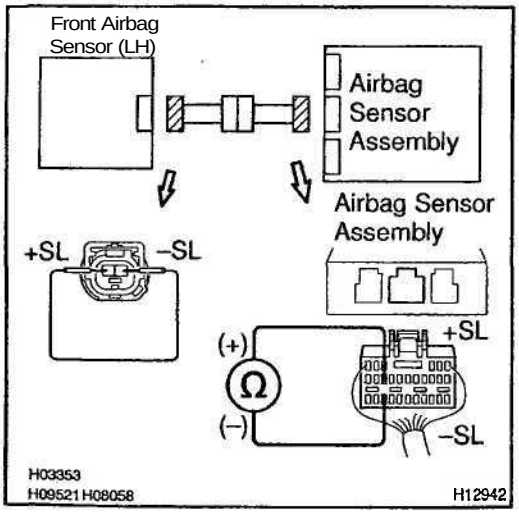

PREPARATION:

Using a service wire, connect +SL and -SL of the connector (on the front airbag sensor (LH) side) between the airbag sensor assembly and the front airbag sensor (LH).

CHECK:

For the connector (on the airbag sensor assembly side) between the front airbag sensor (LH) and the airbag sensor assembly, measure the resistance between +SL and -SL.

OK:

Resistance: Below 1 Ω

NG → Go to step 11.

OK

6	Check front airbag sensor (LH).

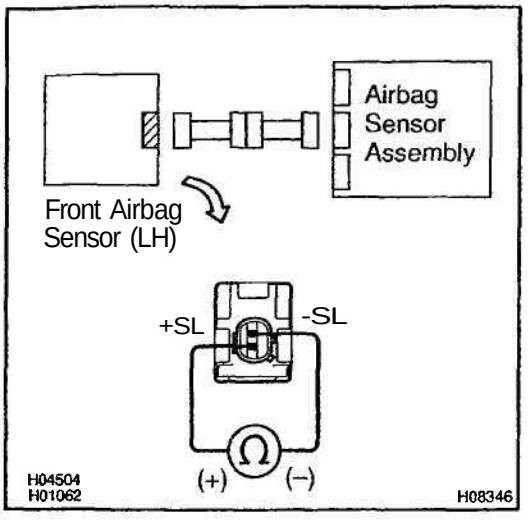

CHECK:

For the connector (on the front airbag sensor (LH)), measure the resistance between +SL and -SL.

OK:

Resistance: 300 – 1500 Ω

NG → **Replace front airbag sensor (LH).**

OK

7	Check airbag sensor assembly.

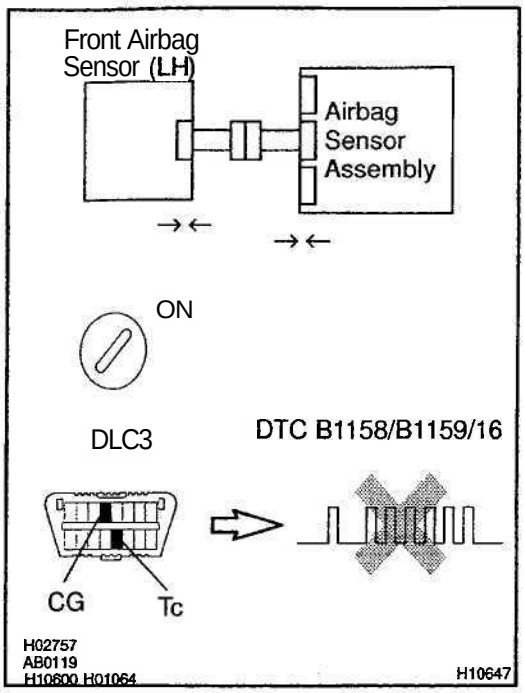

PREPARATION:

(a) Turn the ignition switch to LOCK.
(b) Disconnect negative (-) terminal cable from the battery, and wait at least for 90 seconds.
(c) Connect the front airbag sensor (LH) connector and airbag sensor assembly connector.
(d) Connect negative (-) terminal cable to the battery, and wait at least for 2 seconds.

CHECK:

(a) Turn the ignition switch to ON, and wait at least for 20 seconds.
(b) Clear the DTC stored in memory (See page DI–326).
(c) Turn the ignition switch to LOCK, and wait at least for 20 seconds.
(d) Turn the ignition switch to ON, and wait at least for 20 seconds.
(e) Check the DTC (See page DI-326).

OK:

DTC B1158/B1159/16 is not output.

HINT:

Codes other than code B1158/B1159/16 may be output at this time, but they are not relevant to this check.

NG → **Replace airbag sensor assembly.**

OK

From the results of the above inspection, the malfunctioning part can now be considered normal. To make sure of this, use the simulation method to check.

8	Check engine room main wire harness (to B+).

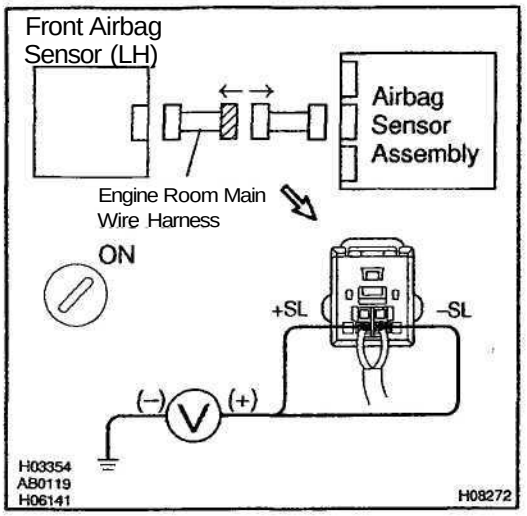

PREPARATION:
Disconnect the engine room main wire harness connector on the airbag sensor assembly side.

CHECK:
(a) Turn the ignition switch to ON.
(b) For the connector (on the LH front door wire harness side) between the airbag sensor assembly and the engine room main wire harness, measure the voltage between body ground and each of +SL and -SL.

OK:
Voltage: Below 1 V

NG	Repair or replace engine room main wire harness.

OK

Repair or replace harness or connector between airbag sensor assembly and engine room main wire harness.

9	Check engine room main wire harness (to ground).

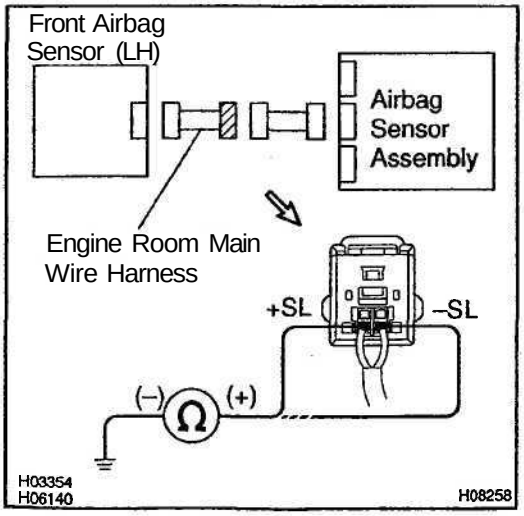

PREPARATION:
Disconnect the engine room main wire harness connector on the airbag sensor assembly side.

CHECK:
For the connector (on the engine room main wire harness side) between the airbag sensor assembly and the engine room main wire harness, measure the resistance between body ground and each of +SL and -SL.

OK:
Resistance: 1 MΩ or Higher

NG	Repair or replace engine room main wire harness.

OK

Repair or replace harness or connector between airbag sensor assembly and engine room main wire harness.

10	**Check engine room main wire harness.**

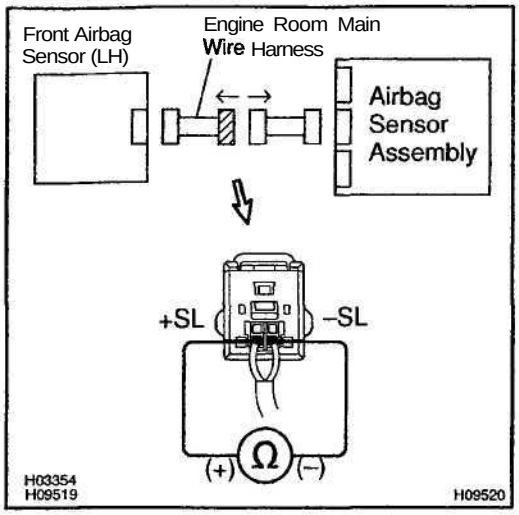

PREPARATION:

Disconnect the engine room main wire harness connector on the airbag sensor assembly side.

CHECK:

For the connector (on the engine room main wire harness side) between the airbag sensor assembly and the engine room main wire harness, measure the resistance between +SL and –SL.

OK:

Resistance: 1 MΩ or Higher

NG → **Repair or replace engine room main wire harness.**

OK

Repair or replace harness or connector between airbag sensor assembly and engine room main wire harness.

11	**Check engine room main wire harness.**

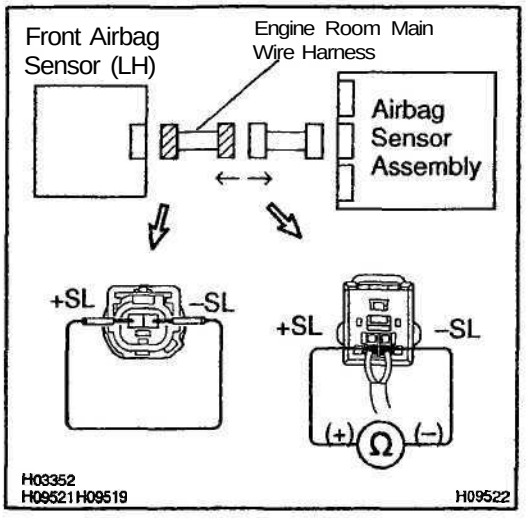

PREPARATION:

(a) Disconnect the engine room main wire harness connector on the airbag sensor assembly side.

(b) Using a service wire, connect +SL and -SL of the connector (on the engine room main wire harness side) between the engine room main wire harness and the front airbag sensor (LH).

CHECK:

For the connector (on the engine room main wire harness side) between the airbag sensor assembly and the engine room main wire harness, measure the resistance between +SL and -SL.

OK:

Resistance: Below 1 Ω

NG → **Repair or replace engine room main wire harness.**

OK →

Repair or replace harness or connector between airbag sensor assembly and engine room main wire harness.

D6PY–01

DTC	Normal	Source Voltage Drop

CIRCUIT DESCRIPTION

The SRS is equipped with a voltage–increase circuit (DC–DC converter) in the airbag sensor assembly in case the source voltage drops.
When the battery voltage drops, the voltage–increase circuit (DC–DC converter) functions to increase the voltage of the SRS to normal voltage.
The diagnosis system malfunction display for this circuit is different from other circuits that is when the SRS warning light remains lit up and the DTC is a normal code, source voltage drop is indicated.
Malfunction in this circuit is not recorded in the airbag sensor assembly, and the source voltage returns to normal, the SRS warning light automatically goes off.

DTC No.	Diagnosis
(Normal)	Source voltage drop

WIRING DIAGRAM

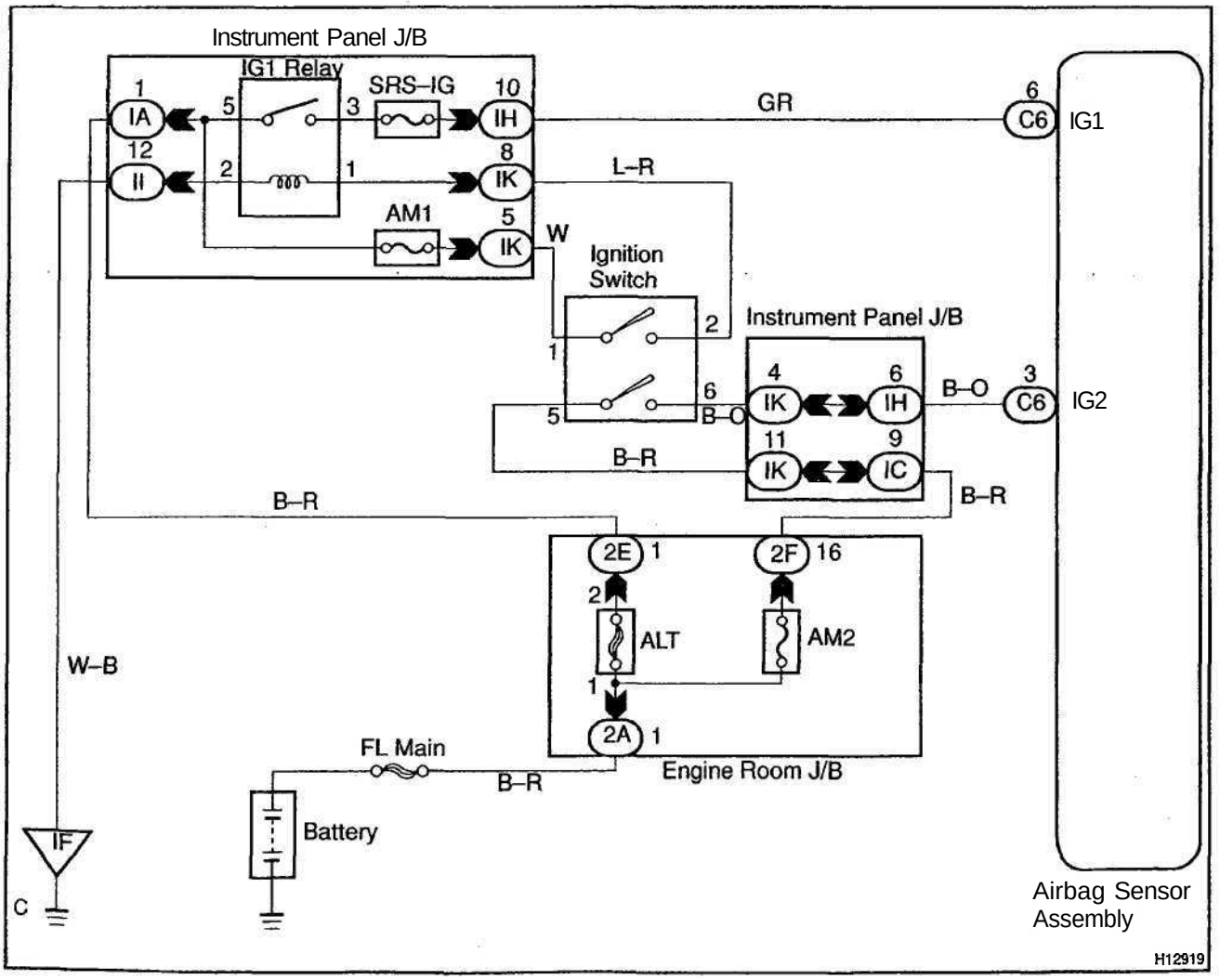

INSPECTION PROCEDURE

1	**Prepare for inspection.**

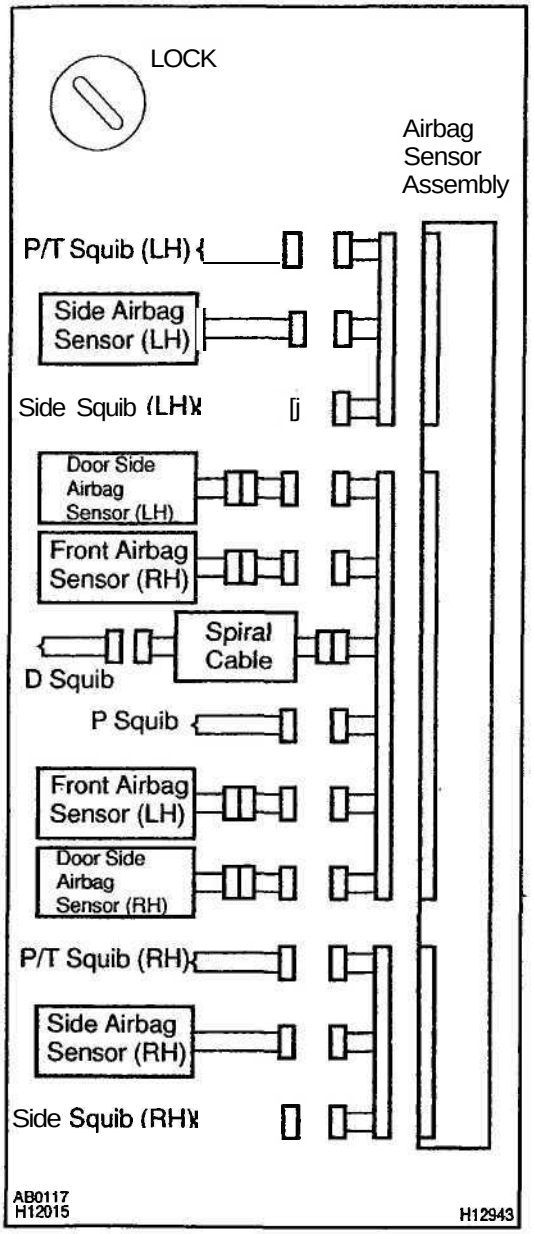

PREPARATION:

(a) Disconnect negative (-) terminal cable from the battery, and wait at least for 90 seconds.
(b) Remove the steering wheel pad (See page SR–11).
(c) Disconnect the connector of the front passenger airbag assembly (See page RS–27).
(d) Disconnect the connector of the side airbag assembly RH and LH (See page RS–40).
(e) Disconnect the connector of the seat belt pretensioner RH and LH (See page BO–109).
(f) Disconnect the connectors of the airbag sensor assembly (See page RS–53).
(g) Disconnect the connector of the front airbag sensor RH and LH (See page RS–58).
(h) Disconnect the connector of the side airbag sensor assembly RH and LH (See page RS–63).
(i) Disconnect the connector of the door side airbag sensor RH and LH (See page RS–68).

CAUTION:

Store the steering wheel pad, front passenger airbag assembly and side airbag assemlby with the front surface facing upward.

2	Check source voltage.

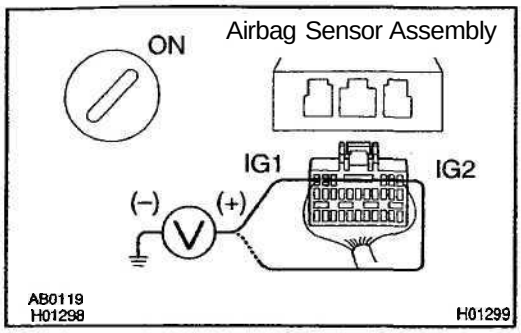

PREPARATION:
Connect negative (-) terminal cable to the battery.

CHECK:
(a) Turn ignition switch ON.
(b) Measure the voltage between body ground and each of IG1 and IG2 on the sensor and operate electric system (defogger, wiper, headlight, heater blower, etc.).

OK:
Voltage: 10 – 14 V

NG → **Check harness between battery and airbag sensor assembly, and check battery and charging system.**

OK ↓

3	Does SRS warning light turn off?

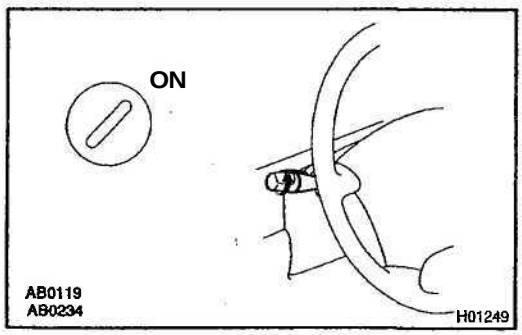

PREPARATION:
(a) Turn the ignition switch to LOCK.
(b) Connect the steering wheel pad connector.
(c) Connect the front passenger airbag assembly connector.
(d) Connect the side airbag assembly connectors.
(e) Connect the seat belt pretensioner connectors.
(f) Connect the airbag sensor assembly connectors.
(g) Connect the front airbag sensor connectors.
(h) Connect the side airbag sensor assembly connectors.
(i) Connect the door side airbag sensor connectors.
(j) Turn the ignition switch to ON.

CHECK:
Operate electric system (defogger, wiper, headlight, heater blower, etc.) and check that SRS warning light goes off.

NO → **Check for DTCs. If a DTC is output, perform troubleshooting for the DTC. If a normal code is output, replace airbag sensor assembly.**

YES ↓

From the results of the above inspection, the malfunctioning part can now be considered normal. To make sure of this, use the simulation method to check.

DIEPZ-01

SRS Warning Light Circuit Malfunction

CIRCUIT DESCRIPTION

The SRS warning light is located on the combination meter.
When the SRS is normal, the SRS warning light lights up for approx. 6 seconds after the ignition switch is turned from the LOCK position to ON position, and then turns off automatically.
If there is a malfunction in the SRS, the SRS warning light lights up to inform the driver of the abnormality.
When terminals Tc and CG of the DLC3 are connected, the DTC is displayed by blinking the SRS warning light.

WIRING DIAGRAM

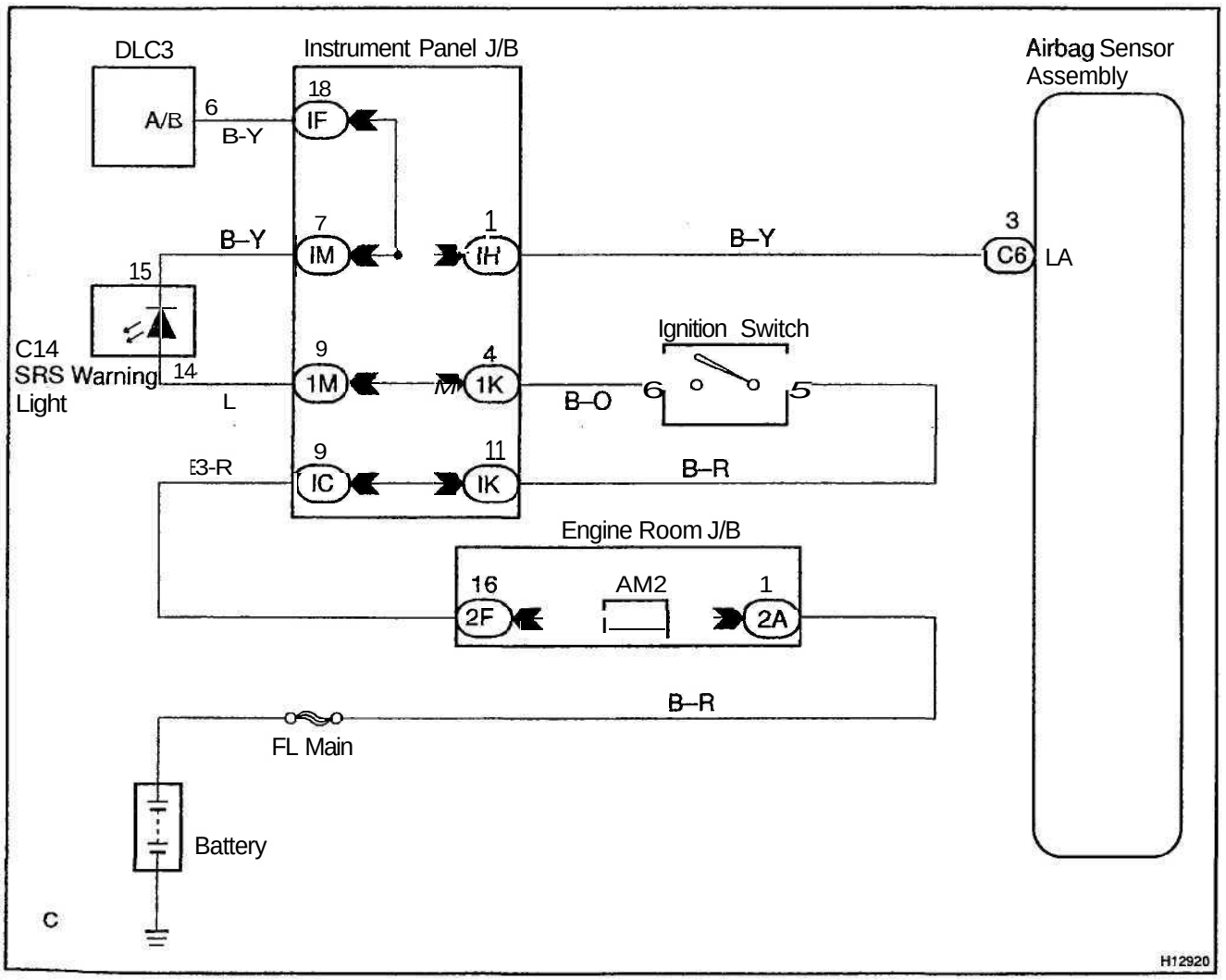

INSPECTION PROCEDURE

Always lights up, when ignition switch is in LOCK position

1	Prepare for inspection (See step 1 on page DI–471).

2	Does SRS warning light turn off?

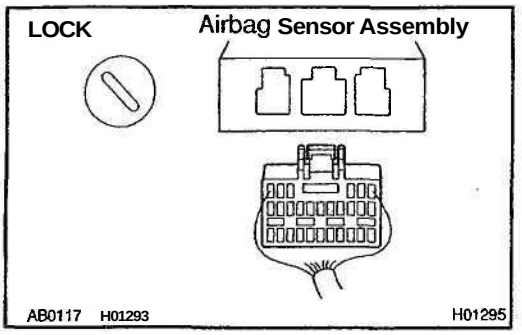

PREPARATION:

(a) Turn the ignition switch to LOCK.
(b) Disconnect negative (-) terminal cable from the battery, and wait at least for 90 seconds.
(c) Disconnect the airbag sensor assembly connector.
(d) Connect negative (-) terminal cable to the battery.

CHECK:

Check operation of SRS warning light.

NO → **Check SRS warning light circuit or terminal A/B circuit of DLC3.**

YES → **Replace airbag sensor assembly.**

Does not light up, when ignition switch is turned to ON

1	Check AM2 Fuse.

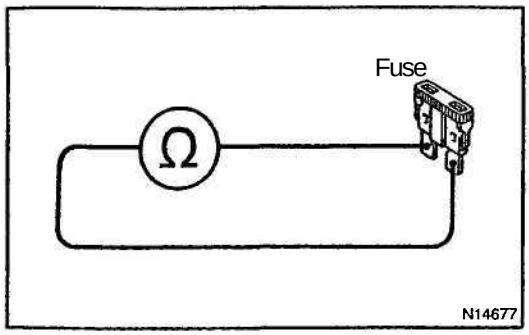

PREPARATION:
Remove the AM2 fuse.
CHECK:
Check continuity of the AM2 fuse.
OK:
Continuity
HINT:
- Fuse may be burnt out even if it appears to be OK during visual inspection.
- If fuse is OK, install it.

NG	Go to step 5.

OK

2	Prepare for inspection (See step 1 on page DI–471).

3	Check SRS warning light circuit.

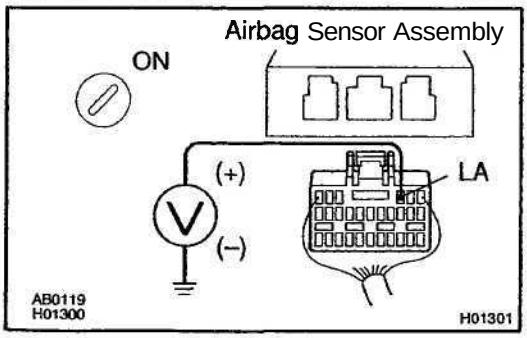

PREPARATION:
(a) Connect negative (-) terminal cable to the battery.
(b) Turn the ignition switch to ON.
CHECK:
Measure the voltage between body ground and LA terminal of the harness side connector of the airbag sensor assembly.
OK:
Voltage: 10 – 14 V

NG	Check combination meter or repair SRS warning light circuit.

OK

4	Does SRS warning light come on?

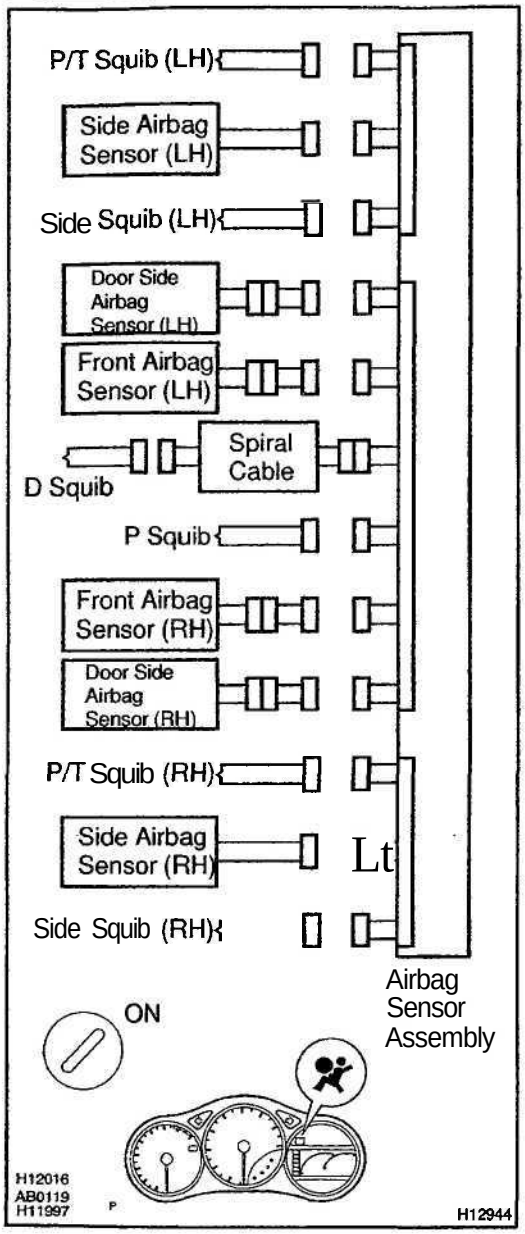

PREPARATION:

(a) Disconnect negative (-) terminal cable from the battery.
(b) Connect the airbag sensor assembly connector.
(c) Connect negative (-) terminal cable to the battery, and wait at least for 2 seconds.
(d) Turn the ignition switch to ON.

CHECK:

Check operation of the SRS warning light.

NO → **Check terminal LA of airbag sensor assembly. If normal, replace airbag sensor assembly.**

YES

From the results of the above inspection, the malfunctioning part can now be considered normal. To make sure of this, use simulation method to check.

5	Is new AM2 fuse burnt out again?

NO → Using simulation method, reproduce malfunction symptoms (See page IN–20).

YES

Check harness between AM2 fuse and SRS warning light.

DI6Q0-01

Tc Terminal Circuit

CIRCUIT DESCRIPTION

By connecting terminals Tc and CG of the DLC3 the airbag sensor assembly is set in the DTC output mode. The DTCs are displayed by blinking the SRS warning light.

WIRING DIAGRAM

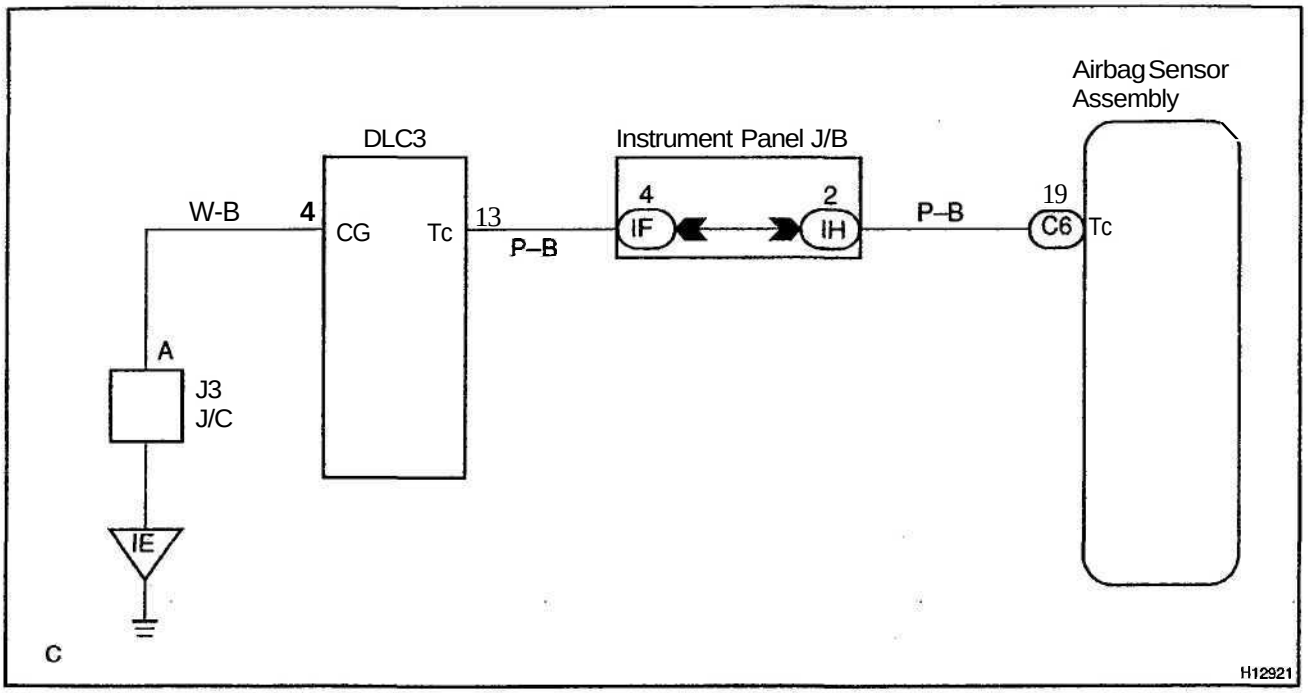

INSPECTION PROCEDURE

If the DTC is not displayed, do the following troubleshooting.

1	Does SRS warning light light up for approx. 6 seconds?

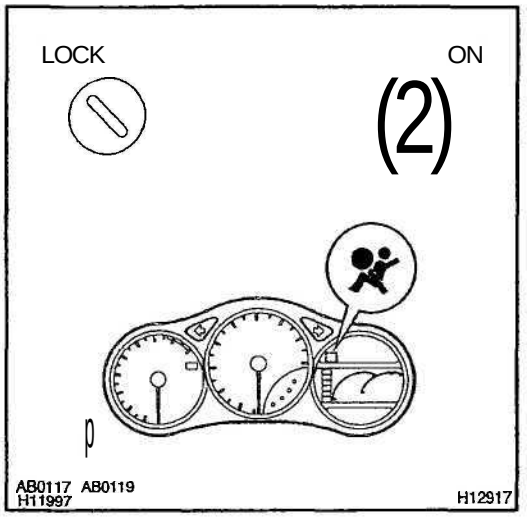

PREPARATION:
Check operation of the SRS warning light after ignition switch is turned from LOCK position to ON position.

NO → **Check SRS warning light system (See page DI–474).**

YES

2	**Check voltage between terminals Tc and CG of DLC3.**

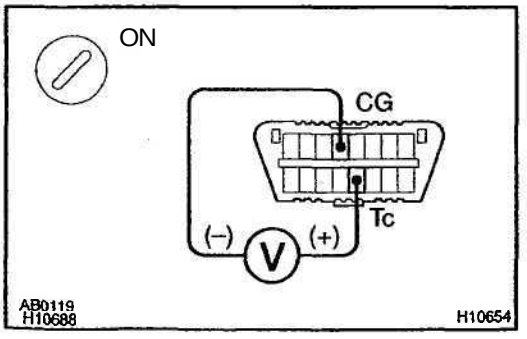

PREPARATION:
Turn the ignition switch to ON.
CHECK:
Measure the voltage between terminals Tc and CG of DLC3.
OK:
Voltage: 10 – 14 V

OK → **Go to step 4.**

NG

3	Check voltage between terminal Tc of DLC3 and body ground.

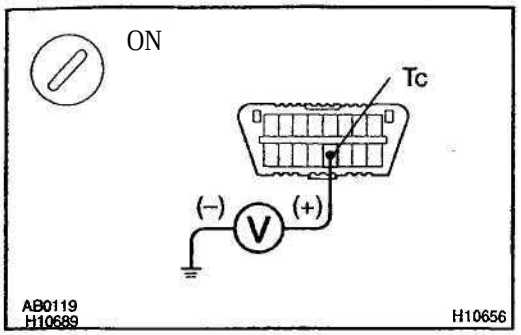

CHECK:
Measure the voltage between terminal Tc of DLC3 and body ground.
OK:
Voltage: **10 – 14 V**

OK	Check harness between terminal E1 of DLC3 and body ground.

NG

4	Check airbag sensor assembly.

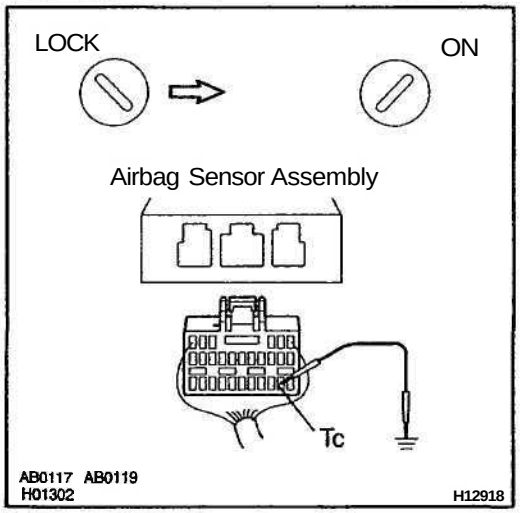

PREPARATION:
(a) Turn the ignition switch to LOCK.
(b) Disconnect negative (-) terminal cable from the battery, and wait at least for 90 seconds.
(c) Disconnect the airbag sensor assembly connector.
(d) Insert service wire into terminal Tc from back side as shown in the illustration.
(e) Connect the airbag sensor assembly connector with service wire.
(f) Connect negative (-) terminal cable to the battery.
(g) Turn the ignition switch to ON and wait at least for 20 seconds.
(h) Connect service wire of terminal Tc to body ground.
CHECK:
Check operation of the SRS warning light.
OK:
SRS waning light comes on.
NOTICE:
Pay due attention to the terminal connecting position to avoid a malfunction.

OK	Check harness between the airbag sensor assembly and DLC3.

NG

Replace airbag sensor assembly.

If the DTC is displayed without a DTC check procedure, perform the following troubleshooting.

1	**Check resistance between terminal Tc of airbag sensor assembly and body ground.**

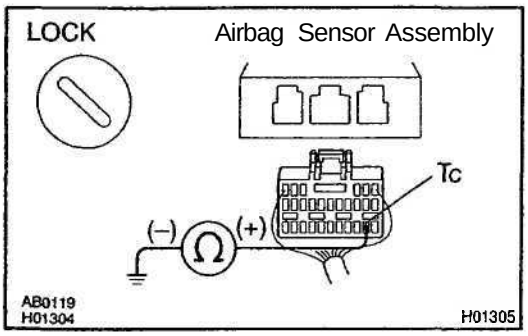

PREPARATION:

(a) Turn the ignition switch to LOCK.
(b) Disconnect negative (-) terminal cable from the battery, and wait at least for 90 seconds.
(c) Disconnect the airbag sensor assembly connector.

CHECK:

Check resistance between terminal Tc of the airbag sensor assembly connector and body ground.

OK:

Resistance: 1 MΩ or Higher

NG → **Repair or replace harness or connector.**

OK

Replace airbag sensor assembly.

CRUISE CONTROL SYSTEM

D106F-14

HOW TO PROCEED WITH TROUBLESHOOTING

Troubleshoot in accordance with the procedure on the following page.

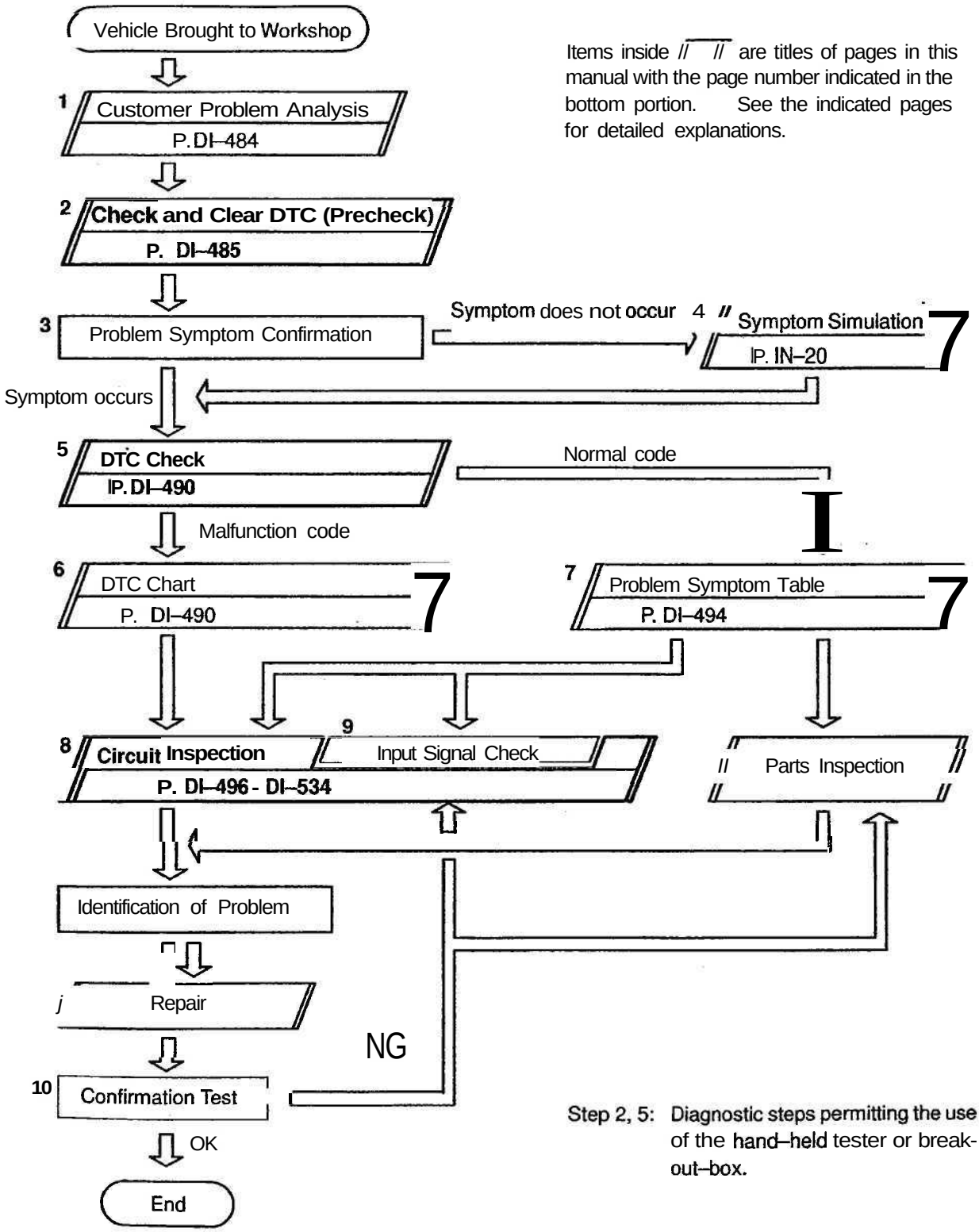

Items inside // // are titles of pages in this manual with the page number indicated in the bottom portion. See the indicated pages for detailed explanations.

Step 2, 5: Diagnostic steps permitting the use of the hand–held tester or break-out–box.

D108G-07

CUSTOMER PROBLEM ANALYSIS CHECK

CRUISE CONTROL SYSTEM Check Sheet

Inspector's name: _____

Customer's Name		Registration No.	
		Registration Year	
		Frame No.	
Date Vehicle Brought in	/ /	Odometer Reading	km Mile

Condition of Problem Occurrence	Date of Problem Occurrence	/ /
	How Often does Problem Occurs	D Continuous D Intermittent (Times a day)
	Vehicle Speed when Problem Occurred	km Mile

Symptoms	D Auto cancel occurs	• Driving condition ☐ City driving ☐ Freeway ☐ Up hill D Down hill • After cancel occurred, did the driver activate cruise control again? ☐ Yes ☐ No
	☐ Cancel does not occur	☐ With brake ON ☐ Except D position shift ☐ At 40 km/h (25 mph) or less ☐ When control SW turns to CANCEL position
	☐ Cruise control malfunction	☐ Slip to acceleration side ☐ Slip to deceleration side D Hunting occurs D O/D cut off does not occur ☐ O/D does not return
	☐ Switch malfunction	☐ SET ☐ ACCEL ☐ COAST ☐ RESUME ☐ CANCEL
	☐ Cruise MAIN indicator light	☐ Remains ON ☐ Does not light up D Blinking

DTC Check	1st Time	n Normal Code D Malfunction Code (Code)
	2nd Time	☐ Normal Code D Malfunction Code (Code)

DI1KS-07

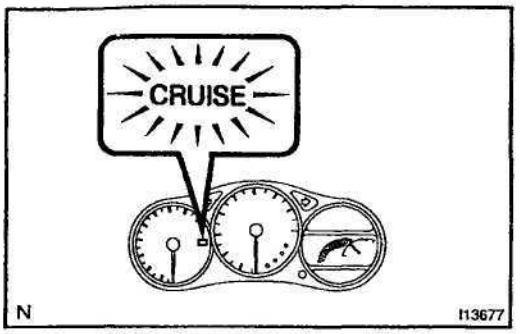

PRE-CHECK

1. DIAGNOSIS SYSTEM

(a) Check the indicator.

(1) Turn the ignition switch ON.

(2) Check that the CRUISE MAIN indicator light comes ON when the cruise control main switch is turned ON, and that the indicator light goes OFF when the main switch is turned OFF.

HINT:

If the indicator check result is not normal, proceed to trouble-shooting (See page BE–42) for the combination meter section.

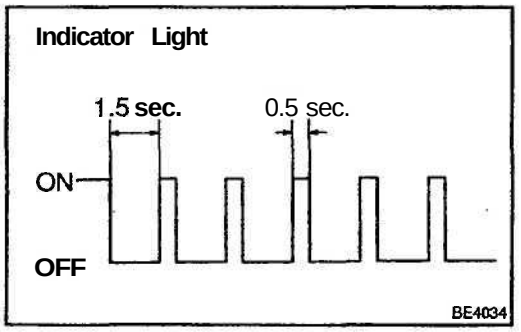

(b) Check the DTC.

HINT:

If a malfunction occurs in the No. 1 vehicle speed sensor or actuator, etc. during cruise control driving, the ECU actuates AUTO CANCEL of the cruise control and turns on and off the CRUISE MAIN indicator light to inform the driver of a malfunction. At the same time, the malfunction is stored in memory as a DTC.

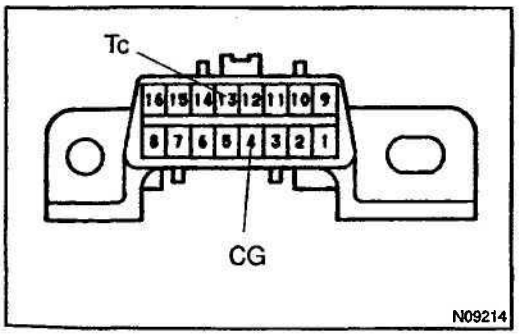

(c) Output of DTC using diagnosis check wire.

(1) Turn the ignition switch ON.

(2) Using SST, connect terminals Tc and CG of DLC3.

SST 09843–18020

(3) Read the DTC on the CRUISE MAIN indicator light.

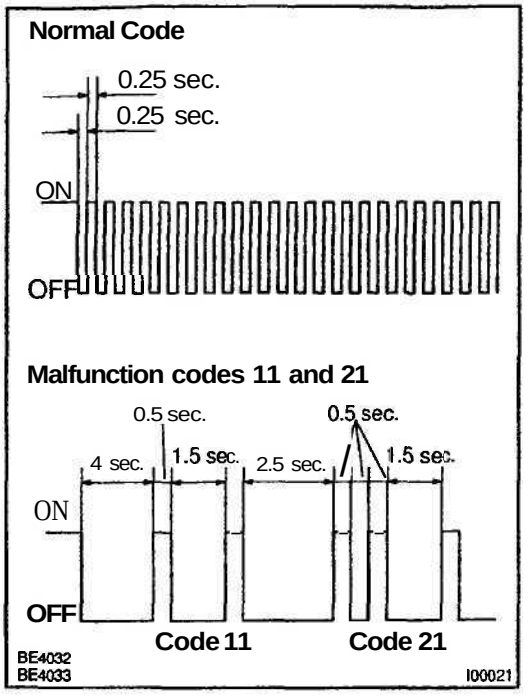

HINT:

If the DTC is not output, inspect the diagnosis circuit (See page DI–532).

As an example, the blinking patterns for codes; normal, 11 and 21 are shown in the illustration.

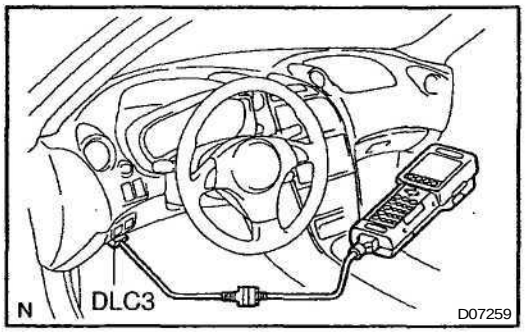

2. USING HAND–HELD TESTER

(a) Hook up the hand–held tester to the DLC3.

(b) Monitor the ECU data by following the prompts on the tester screen.

HINT:

Hand–held tester has a "Snapshot" function which records the monitored data.

Please refer to the hand–held tester operator's manual for further details.

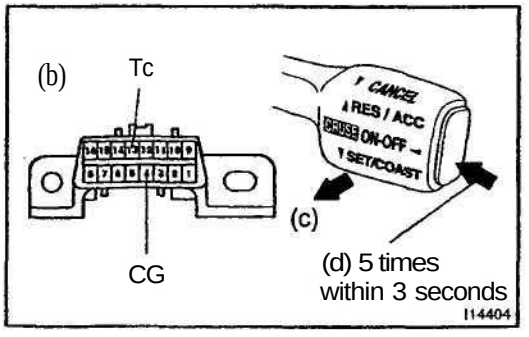

3. DTC CLEARANCE (ERASE MODE)

HINT:

During in the erase mode, diag detection does not work.

(a) Drive at about 15 km/h or below.

(b) Using SST, connect terminals Tc and E1 of DLC3.
SST 09843–18020

(c) Pull the cruise control switch to CANCEL.

(d) On the above metioned condition, turn on the cruise control main switch 5 times within 3 seconds.

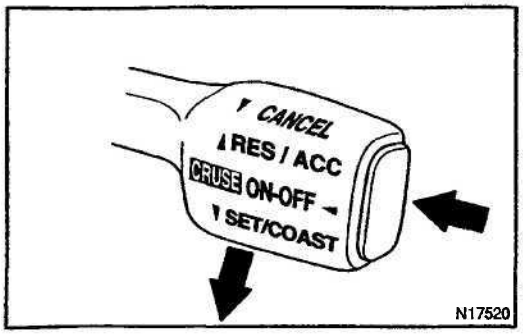

4. PROBLEM SYMPTOM CHECK (ROAD TEST)

(a) Inspect the SET switch.
(1) Push the main switch ON.
(2) Drive at a desired speed (40 km/h (25 mph) or higher).
(3) Press the control switch to the SET/COAST.
(4) After releasing the switch, check that the vehicle cruises at the desired speed.



(b) Inspect the ACCEL switch.
(1) Push the main switch ON.
(2) Drive at a desired speed (40 km/h (25 mph) or higher).
(3) Check that the vehicle speed increases while the control switch is turned to RES/ACC, and that the vehicle cruises at the set speed when the switch is released.
(4) Momentarily raise the control switch upward to the RES/ACC position and then immediately release it. Check that the vehicle speed increases by approx. 1.5 km/h (Tap–up function).

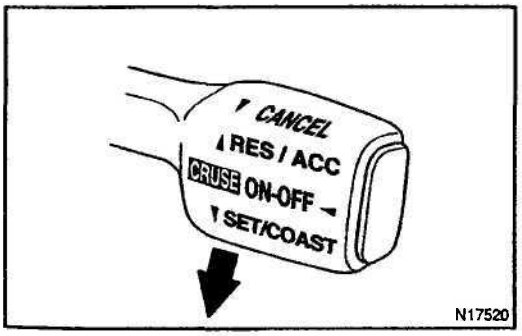

(c) Inspect the COAST switch.
(1) Push the main switch ON.
(2) Drive at a desired speed (40 km/h (25 mph) or higher).
(3) Check that the vehicle speed decreases while the control switch is turned to SET/COAST, and the vehicle cruises at the set speed when the switch is released.
(4) Momentarily pull the control switch down to SET/COAST, and then immediately release it. Check that the vehicle speed decreases by about 1.5 km/h (Tap–down function).

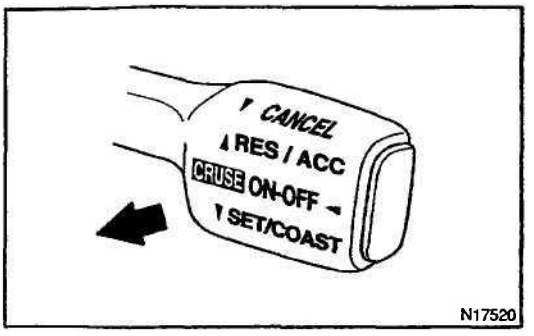

(d) Inspect the CANCEL switch.
(1) Push the main switch ON.
(2) Drive at a desired speed (40 km/h (25 mph) or higher).
(3) When operating one of the following operations, check that the cruise control system is cancelled and that the normal driving mode is reset.
- Depress the brake pedal
- Depress the clutch pedal (M/T)
- Shift to except D position (A/T)
- Push the main switch OFF
- Pull the cruise control switch to CANCEL

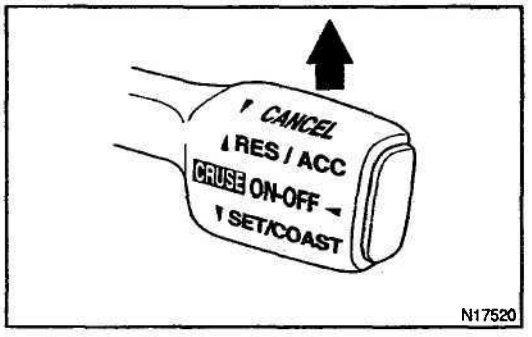

(e) Inspect the RESUME switch.
(1) Push the main switch ON.
(2) Drive at a desired speed (40 km/h (25 mph) or higher).
(3) When operating one of the following operations check that the cruise control system is cancelled and that the normal driving mode is reset.
- Depress the brake pedal
- Depress the clutch pedal (M/T)
- Shift to except D position (A/T)
- Push the main switch OFF
- Pull the cruise control switch to CANCEL

(4) After the control switch is turned to RES/ACC at the driving speed of more than 40 km/h (25 mph), check that the vehicle restores the speed prior to the cancellation.

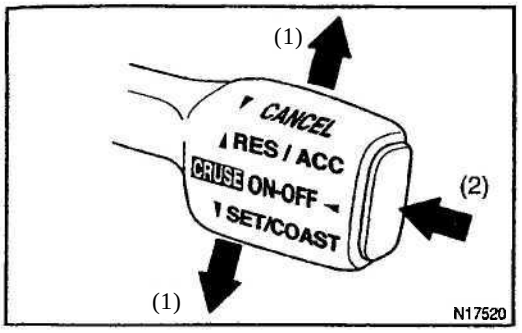

5. INPUT SIGNAL CHECK

HINT:

(1) For check No.1 - No.3:

Turn ignition switch ON.

(2) For check No.4:

- Jack up the vehicle.
- Start the engine.
- Shift to D position.

(a) Pull the control switch to SET/COAST or RES/ACC position and hold it down or up (1).

(b) Push the main switch ON (2).

(c) Check that the CRUISE MAIN indicator light blinks twice or 3 times repeatedly after 3 seconds.

(d) Turn the SET/COAST or RES/ACC switch OFF.

(e) Operate each switch as listed in the table below.

(f) Read the blinking pattern of the CRUISE MAIN indicator light.

(g) After performing the check, turn the main switch OFF.

HINT:

When 2 or more signals are input to the ECU, the lowest numbered code will be displayed 1 st.

No.	Operation Method	CRUISE MAIN Indicator Light Blinking Pattern	Diagnosis
1	Turn SET/COAST switch ON	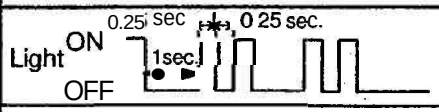	SET/COAST switch circuit is normal
2	Turn RES/ACC switch ON		RES/ACC switch circuit is normal
3	Turn CANCEL switch ON	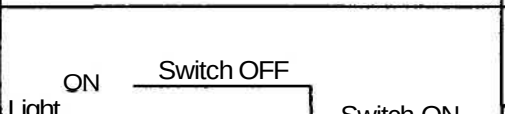	CANCEL switch circuit is normal
	Turn stop light switch ON Depress brake pedal		Stop light switch circuit is normal
	Turn PNP switch OFF (Shift to except D position)		PNP switch circuit is normal
	Turn clutch switch OFF (Depress clutch pedal)		Clutch switch circuit is normal
4	Drive at about 40 km/h (25 mph)or higher		Vehicle Speed Sensor is normal
	Drive at about 40 km/h (25 mph) or below	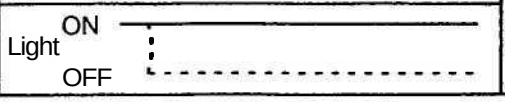	

DI0BI-10

DIAGNOSTIC TROUBLE CODE CHART

If a malfunction code is displayed during the DTC check, check the circuit listed for that code in the table below and proceed to the appropriate page.

DTC No. (See Page)	Circuit Inspection	Trouble Area
11, 15 (DI–496)	Actuator Motor Circuit	• Actuator motor • Harness or connector between cruise control ECU and actuator motor • Cruise control ECU
12,43 (DI–498)	Actuator Magnetic Clutch Circuit	• STOP Fuse • Stop light switch • Actuator magnetic clutch • Harness or connector between cruise control ECU and actuator magnetic clutch, actuator magnetic clutch and body ground • Cruise control ECU
14 (DI–502)	Actuator Mechanical Malfunction	• Actuator motor (actuator lock: motor, arm) • Cruise control ECU
21 (DI–504)	Open in Vehicle Speed Sensor Circuit	• Combination meter • Harness or connector between cruise control ECU and combination meter, combination meter and vehicle speed sensor • Vehicle speed sensor • Cruise control ECU
23 (DI–508)	Vehicle Speed Signal Abnormal	• Vehicle speed sensor • Cruise control ECU
41	Cruise control ECU	• Cruise control ECU
42	Source voltage drop	• Power source

DI6QT-01

PARTS LOCATION

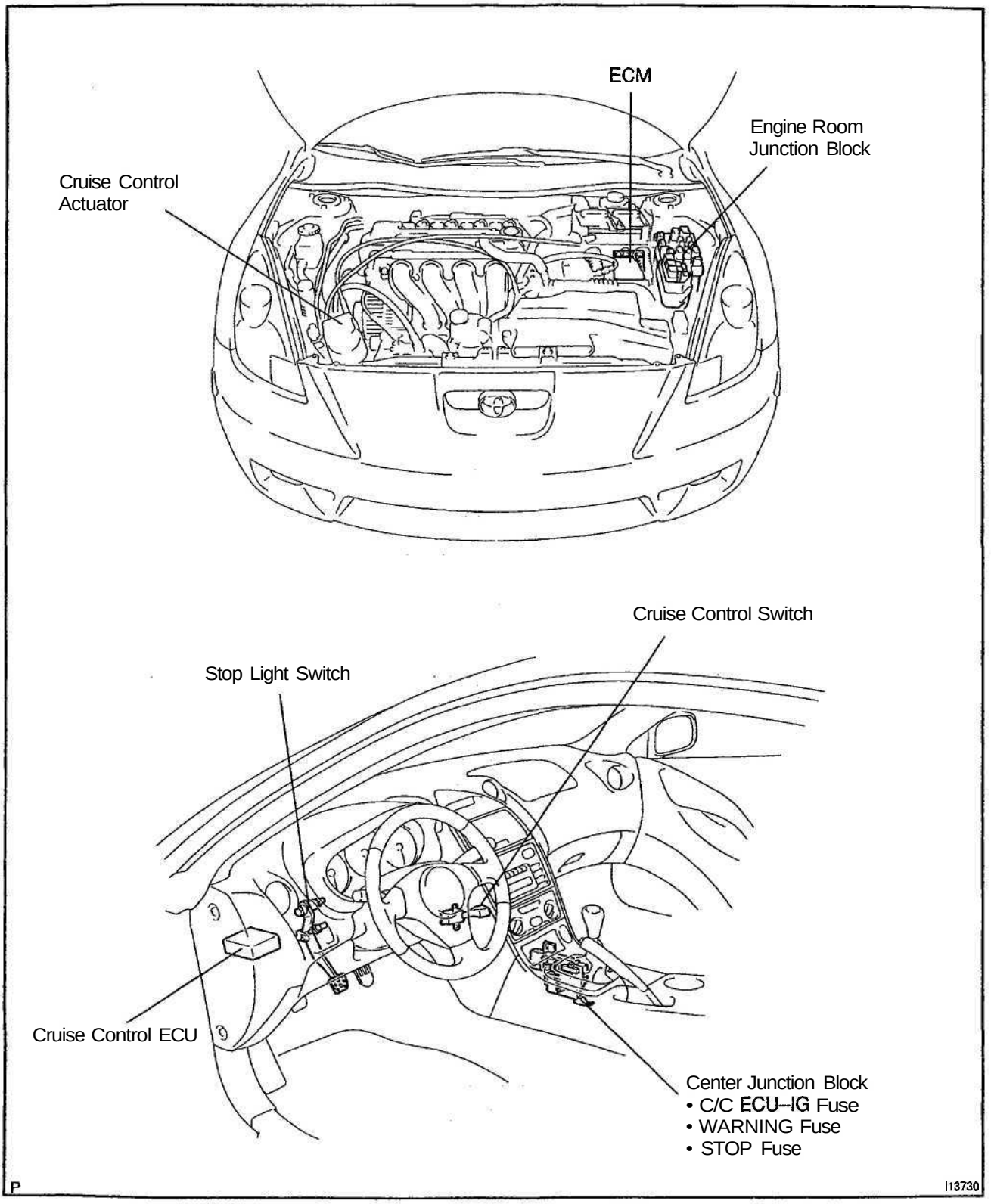

DI1KT-09

TERMINALS OF ECU

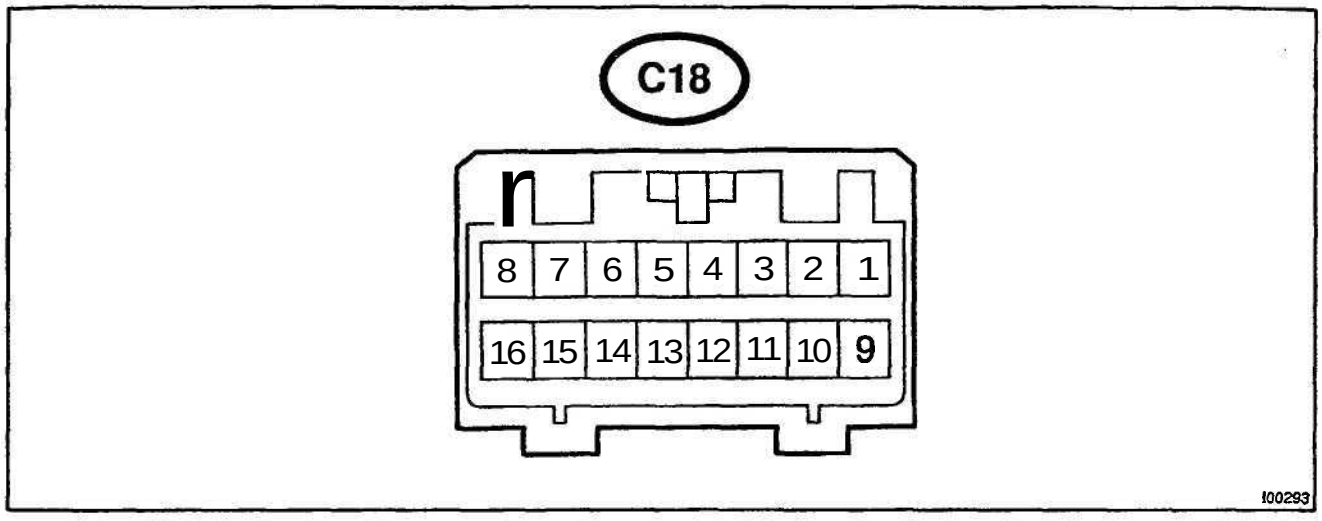

Symbols (Terminals No.)	Wiring Color	Condition	STD Voltage (V)
STP– ↔ GND (C18–2 ↔ C18–16)	G–W ↔ W–B	Depress brake pedal	10-16V
		Release brake pedal	Below 1 V
D ↔ GND (C18–3 ↔ C18–16)	B–Y ↔ W–B	Shift to positions except D	Below 1 V
		Shift to D position	10-16V
PI ↔ GND (C18–4 ↔ C18–16)	Y–B ↔ W–B	Ignition switch ON Cruise control main switch ON	Below 1.2 V
		Ignition switch ON Cruise control main switch OFF	10-16V
TC ↔ GND (C18–5 ↔ C18–16)	P-B ↔ W–B	Ignition switch ON	10-16V
		Ignition switch ON Connect terminals Tc and E1 of diagnostic check connector	Below 1 V
ECT ↔ GND (C18–6 ↔ C18–16)	Y ↔ W–B	During driving Gear position 3rd	10-16V
		During driving Gear position O/D	Below 1 V
MC ↔ GND (C18–7 ↔ C18–16)	R–W ↔ W–B	During cruise control driving COAST switch held ON	9-15V
		During cruise control driving ACC switch held ON	Below 1 V
L ↔ GND (C18–8 ↔ C18–16)	G–B ↔ W–B	During cruise control driving	9-15V
		Except during cruise control driving	Below 1 V
B ↔ GND (C18–9 ↔ C18–16)	B–O ↔ W–B	Ignition switch ON	10-16V
CCS ↔ GND (C18–10 ↔ C18–16)	W ↔ W–B	Ignition switch ON	10-16V
		Ignition switch ON MAIN switch held ON	4.2 – 8.8 V
		Ignition switch ON SET/COAST switch held ON	2.5 – 6.3 V
		Ignition switch ON RES/ACC switch held ON	0.8 – 3.7 V

SPD ↔ GND (C18–12 ↔ C18–16)	W–R ↔ W–B	Engine start Car stoppage.	Below 1.5 V or 4.7 – 16 V
		During driving (Pulse generated).	3 - 7 V
IDL ↔ GND (C18–13 ↔ C18–16)	L–W ↔ W–B	Ignition switch ON Throttle valve fully opened.	10 - 16 V
		Ignition switch ON Throttle valve fully closed.	Below 1.5 V
OD ↔ GND (C18–14 ↔ C18–16)	B ↔ W–B	During cruise control driving OD switch ON.	10 - 16 V
		During cruise control driving OD switch OFF (3rd driving)	Below 1 V
MO ↔ GND (C18–15 ↔ C18–16)	R–L ↔ W–B	During cruise control driving ACC switch hold ON	9 - 15 V
		During cruise control driving COAST switch hold ON	Below 1 V
GND ↔ Body Ground (C18–16 ↔ Body Ground)	W–B ↔ Body Ground	Constant	Below 1 V

DI08L-16

PROBLEM SYMPTOMS TABLE

Symptom	Suspect Area	See page
SET not occurring or CANCEL occurring. (DTC is Normal)	1. Main Switch Circuit (Cruise control switch)	DI-509
	2. Vehicle Speed Sensor	DI-504
	3. Control Switch Circuit (Cruise control switch)	DI-509
	4. Stop Light Switch Circuit	DI-515
	5. Park/Neutral Position Switch Circuit	DI-522
	6. Clutch Switch	DI-525
	7. Actuator Motor Circuit	DI-496
	8. Cruise Control Cable	DI-534
	9. Cruise Control ECU	IN-30
SET not occurring or CANCEL occurring. (DTC dose not output)	1. ECU Power Source Circuit	DI-527
	2. Cruise Control ECU	IN-30
Actual vehicle speed deviates above or below the set speed.	1. Cruise Control Cable	DI-534
	2. Vehicle Speed Signal Abnormal	DI-504
	3. Electronically Controlled Transmission Communication Circuit	DI-519
	4. Actuator Motor Circuit	DI-496
	5. Idle Signal Circuit (Main throttle position sensor)	DI-512
	6. Cruise Control ECU	IN-30
Gear shifting frequent between 3rd O/D when driving on uphill road. (Hurting)	1. Electronically Controlled Transmission Communication Circuit	DI-519
	2. Cruise Control ECU	IN-30
Cruise control not cancelled, even when brake pedal is depressed.	1. Cruise Control Cable	DI-534
	2. Stop Light Switch Circuit	DI-515
	3. Actuator Motor Circuit	DI-496
	4. Cruise Control ECU	IN-30
Cruise control not cancelled, even when transmission is shifted to "N" postion.	1. Cruise Control Cable	DI-534
	2. Park/Neutral Position Switch Circuit	DI-522
	3. Actuator Motor Circuit	DI-496
	4. Cruise Control ECU	IN-30
Cruise control not cancelled, even when clutch pedal is depressed.	1. Cruise Control Cable	DI-534
	2. Clutch Switch Circuit	DI-525
	3. Actuator Motor Circuit	DI-496
	4. Cruise Control ECU	IN-30
Control switch does not operate. (SET/COAST, ACC/RES, CANCEL not possible)	1. Cruise Control Cable	DI-534
	2. Control Switch Circuit	DI-525
	3. Actuator Motor Circuit	DM96
	4. Cruise Control ECU	IN-30
SET possible at 40 km/h (25 mph) or less, or CANCEL does not operate at 40 km/h (25 mph) or less.	1. Cruise Control Cable	DI-534
	2. Vehicle Speed Signal Abnormal	DI-508
	3. Actuator Motor Circuit	DI-496
	4. Cruise Control ECU	IN-30
Poor response is in ACCEL and RESUME modes.	1. Cruise Control Cable	DI-534
	2. Electronically Controlled Transmission Communication Circuit	DI-519
	3. Actuator Motor Circuit	DI-496
	4. Cruise Control ECU	IN-30
O/D does not resume, even though the road is not uphill.	1. Electronically Controlled Transmission Communication Circuit	DI-519
	2. Cruise Control ECU	IN-30
DTC memory is erased.	1. Cruise Control ECU	IN-30

DTC is not output, or is output when should not be.	1. Diagnosis Circuit 2. Cruise Control ECU	DI–532 IN–30
Cruise MAIN indicator light remains ON or falls to light up.	1. Cruise MAIN Indicator Light Switch Circuit	DI–530

CIRCUIT INSPECTION

DTC	11, 15	Actuator Motor Circuit

CIRCUIT DESCRIPTION

The actuator motor is operated by signals from the ECU. Acceleration and deceleration signals are transmitted according to changes in the Duty Ratio (See below).

Duty Ratio

The duty ratio is the ratio of the period of continuity in one cycle. For example, if A is the period of continuity in one cycle, and B is the period of non–continuity.

$$\text{Duty Ratio} = \frac{A}{A + B} \times 100\ (\%)$$

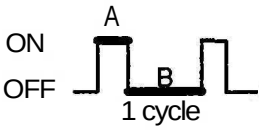

DTC No.	Detection Item	Trouble Area
11	Short in actuator motor circuit.	• Actuator motor • Harness or connector between cruise control ECU and actuator motor •Cruise control ECU
15	Open in actuator motor circuit.	•Actuator motor

WIRING DIAGRAM

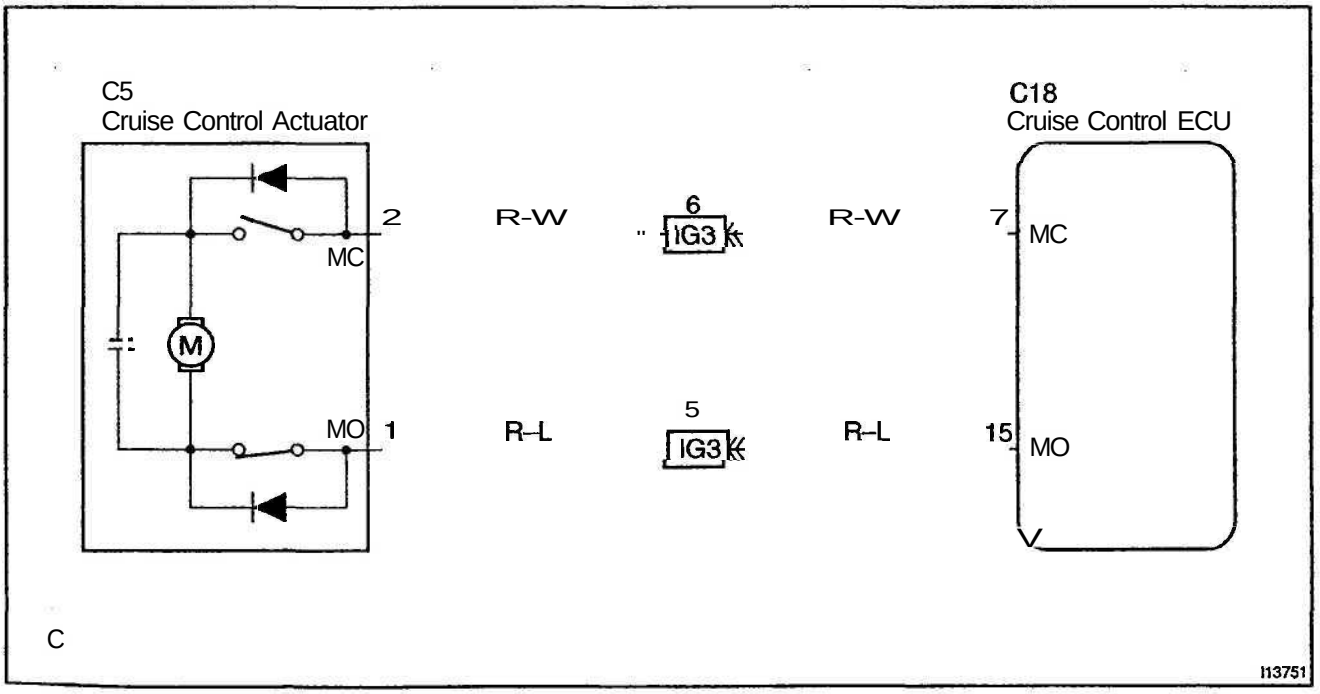

INSPECTION PROCEDURE

1	**Check resistance between terminals MO and MC of actuator motor.**

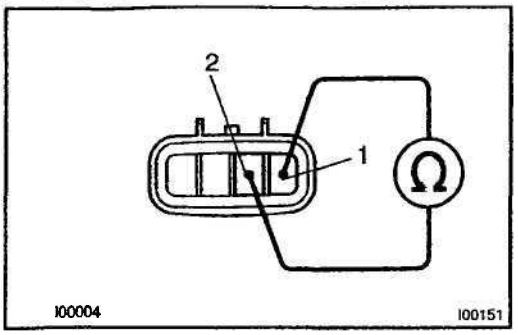

PREPARATION:

(a) Turn ignition switch OFF.

(b) Disconnect the actuator connector.

CHECK:

Measure resistance between terminals 1 and 2.

HINT:

If control plate is in fully opened or fully closed positions, resistance can not be measured.

OK:

Resistance: more than 4.2 Ω

NG	**Replace cruise control actuator.**

OK

2	**Check for open and short in harness and connectors between cruise control ECU and actuator motor (See page IN–30).**

NG	**Repair or replace harness or connector.**

OK

Check and replace cruise control ECU (See page IN–30).

D06N-16

DTC	12, 43	Actuator Magnetic Clutch Circuit

CIRCUIT DESCRIPTION

This circuit turns on the magnetic clutch inside the actuator during cruise control operation according to the signal from the ECU. If a malfunction occurs in the actuator or speed sensor, etc. during cruise control operation, the rotor shaft between the motor and control plate is released.
When the brake pedal is depressed, the stop light switch turns on, supplying electrical power to the stop light. Power supply to the magnetic clutch is mechanically cut and the magnetic clutch is turned OFF.
When driving downhill, if the vehicle speed exceeds the set speed by 15 km/h (9 mph), the ECU turns the safety magnet clutch OFF. If the vehicle speed later drops to within 10 km/h (6 mph), cruise control at the set speed is resumed.

DTC No.	Detection Item	Trouble Area
12	Short in actuator magnetic clutch circuit Open (0.8 sec.) in actuator magnetic clutch circuit	• STOP Fuse • Stop light switch • Actuator magnetic clutch • Harness or connector between cruise control ECU and actuator magnetic clutch, actuator magnetic clutch and body ground • Cruise control ECU

WIRING DIAGRAM

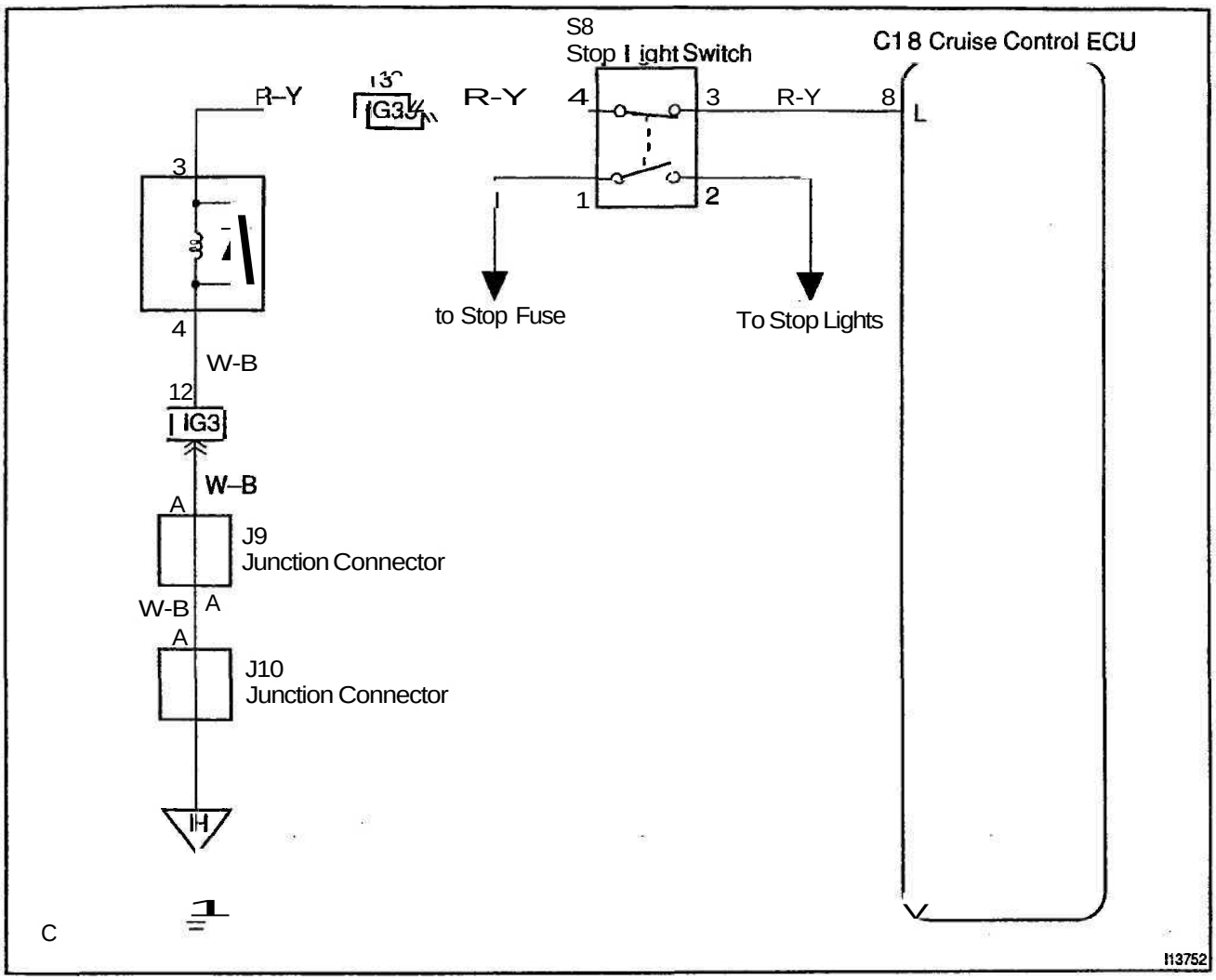

INSPECTION PROCEDURE

1	Check STOP fuse.

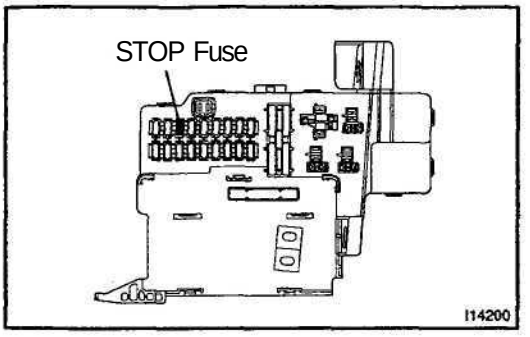

PREPARATION:
(a) Turn ignition switch OFF.
(b) Remove the STOP fuse from instrument panel junction block.

CHECK:
Check fuse continuity.

OK:
There is continuity.

NG → **Replace STOP fuse.**

OK

2	Check stop light switch.

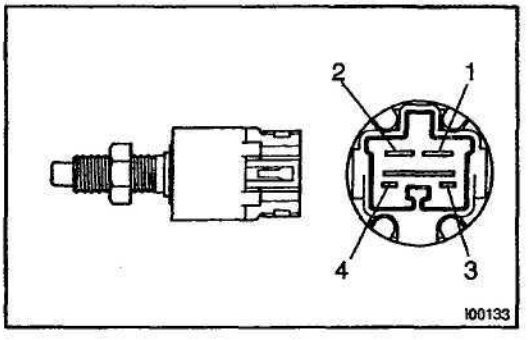

PREPARATION:
Disconnect the stop light switch connector.

CHECK:
Check continuity between terminals.

Switch position	Continuity
Switch pin free (Brake pedal depressed)	1-2
Switch pin pushed in (Brake pedal released)	3-4

NG → **Replace stop light switch.**

OK

3	**Check resistance between terminals L and GND of actuator magnetic clutch.**

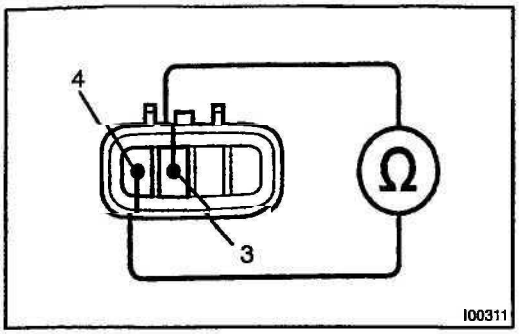

PREPARATION:
(a) Turn ignition switch OFF.
(b) Disconnect the actuator connector.

CHECK:
Measure resistance between terminals 3 and 4.

OK:

Resistance: 34.65 - 42.35 &

NG → **Replace cruise control actuator.**

OK

4	**Check for open and short in harness and connectors between cruise control ECU and actuator magnetic clutch, actuator magnetic clutch and body ground (See page IN–30).**

NG → **Repair or replace harness or connector.**

OK

Check and replace cruise control ECU (See page IN–30).

D1080-15

DTC	14	Actuator Mechanical Malfunction

CIRCUIT DESCRIPTION

The circuit detects the rotation position of the actuator control plate and sends a signal to the ECU.

DTC No.	Detection Item	Trouble Area
14	Cruise control actuator mechanical malfunction.	• Actuator lock: (motor, arm) • Actuator motor • Cruise control ECU

WIRING DIAGRAM

See page DI–498.

INSPECTION PROCEDURE

1	Check cruise control actuator arm locking operation

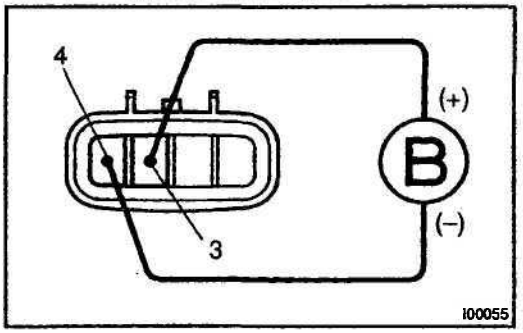

PREPARATION:

(a) Turn ignition switch OFF.

(b) Disconnect the actuator connector.

CHECK:

(a) Connect the positive (+) lead from the battery to the terminal 3 of actuator and the negative (-) lead to terminal 4.

NOTICE:

Do not connect the high tension cables to the wrong battery terminal. The cruise control actuator will be damaged.

(b) Move the control plate by hand.

OK:

Control plate doesn't move.

NG → **Replace cruise control actuator.**

OK

2	Check cruise control actuator operation.

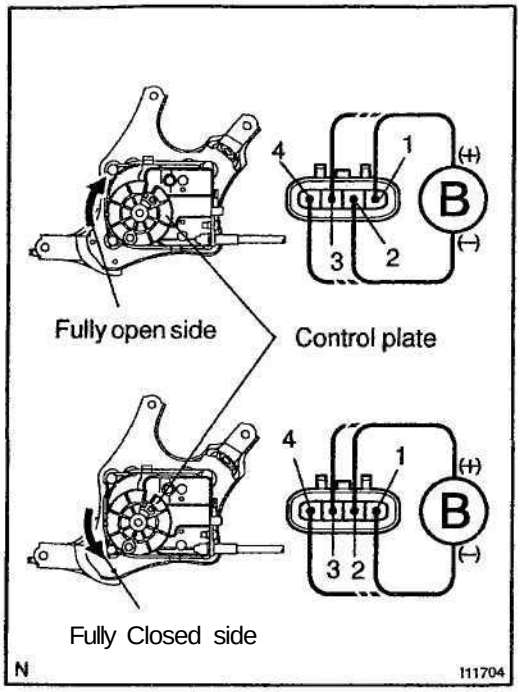

PREPARATION:

(a) Turn ignition switch OFF.

(b) Disconnect the actuator connector.

CHECK:

Connect the positive (+) lead from the battery to terminals 1 and 3 of actuator, connect the negative (-) lead to terminals 2 and 4 of actuator.

OK:

Control arm moves to fully open side

CHECK:

Connect the positive (+) lead from the battery to terminals 2 and 3 of actuator, connect the negative (-) lead to terminals 1 and 4 of actuator.

OK:

Control arm moves to fully closed side

NG → **Replace cruise control actuator.**

OK

3	Check harness and connector between cruise control ECU and cruise control actuator (See page IN–30).

NG → **Repair or replace harness or connector.**

OK

Check and replace cruise control ECU (See page IN–30).

DI0SP-19

DTC	21	Open in Vehicle Speed Sensor Circuit

CIRCUIT DESCRIPTION

The signal from the vehicle speed sensor circuit is sent to cruise control ECU as vehicle speed signal.
The rotor shaft is driven by the gear of the transmission.
For each rotation of the shaft, the vehicle speed sensor sends a **4-pulse** signal through the combination meter to the cruise control ECU (See the following installation).
This signal is converted inside the combination meter and sent as a **4-pulse** signal to the cruise control ECU.
The ECU calculates the vehicle speed from this pulse frequency.

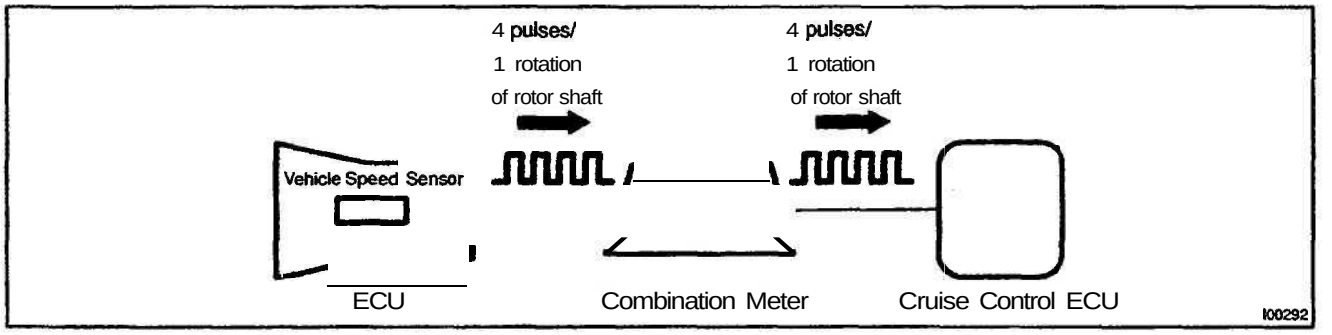

DTC No.	Detection Item	Trouble Area
21	Speed signal is not input to the cruise control ECU while cruise control is set.	• Combination meter • Harness or connector between cruise control ECU and combination meter, combination meter and vehicle speed sensor • Vehicle speed sensor • Cruise control ECU

WIRING DIAGRAM

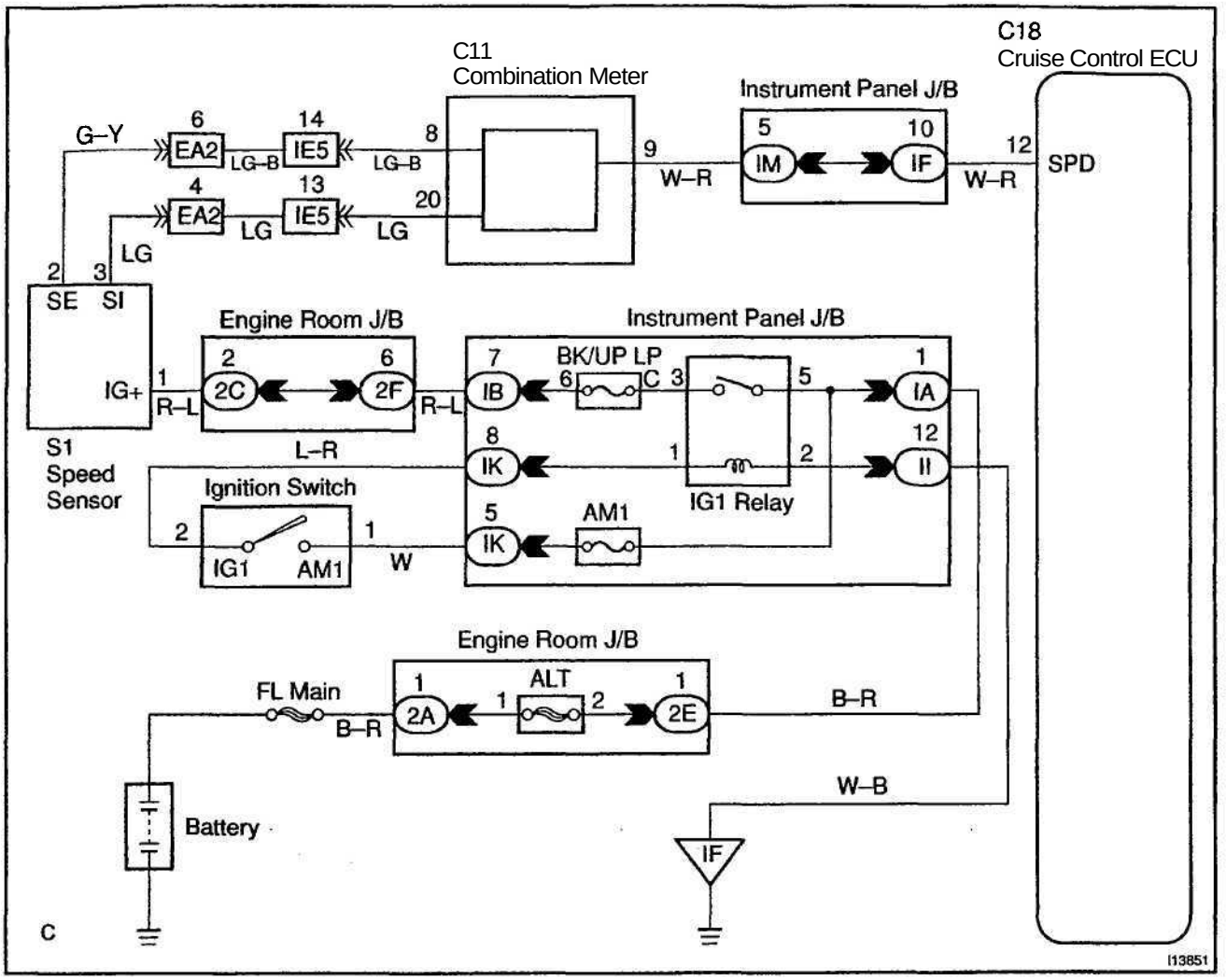

INSPECTION PROCEDURE

1	**Input signal check.**

Input Signal	Indicator Light Blinking Pattern
Drive at about 40 km/h (25 mph) or below	Light ON / OFF
Drive at about 40 km/h (25 mph) or higher	Light ON / OFF

CHECK:

(a) See input signal check on page DI-485.

(b) Check indicator light operation when driving with vehicle speed above 40 km/h (25 mph), and with vehicle speed below 40 km/h (25 mph).

OK:

Vehicle speed above 40 km/h (25 mph):
Indicator light blinks

Vehicle speed below 40 km/h (25 mph):
Indicator light stays on

OK → **Check and replace cruise control ECU (See page IN-30).**

NG

2	**Check speedometer circuit (See Combination meter troubleshooting on page BE-42).**

NG → **Repair or replace harness, connector or combination meter assembly.**

OK

3	**Check harness and connector between cruise control ECU and combination meter, combination meter and vehicle speed sensor (See page IN-30).**

NG → **Repair or replace harness or connector.**

OK

4	Check vehicle speed sensor (See page **BE–46).**

NG → Replace vehicle speed sensor.

OK →

Check and replace cruise control ECU (See page IN–30).

D108O-14

DTC	23	Vehicle Speed Signal Abnormal

CIRCUIT DESCRIPTION

See page DI–504.

DTC No.	Detection Item	Trouble Area
23	Vehicle speed sensor pulse is abnormal.	• Vehicle speed sensor • Cruise control ECU

WIRING DIAGRAM

See page DI-504.

INSPECTION PROCEDURE

1	Check vehicle speed sensor (See page **BE–46).**

NG → Replace vehicle speed sensor.

OK

Check and replace cruise control ECU (See page IN–30).

Control Switch Circuit (Cruise Control Switch)

CIRCUIT DESCRIPTION

This circuit carries the SET/COAST, RESUME/ACCEL and CANCEL signals (each voltage) to the ECU.

WIRING DIAGRAM

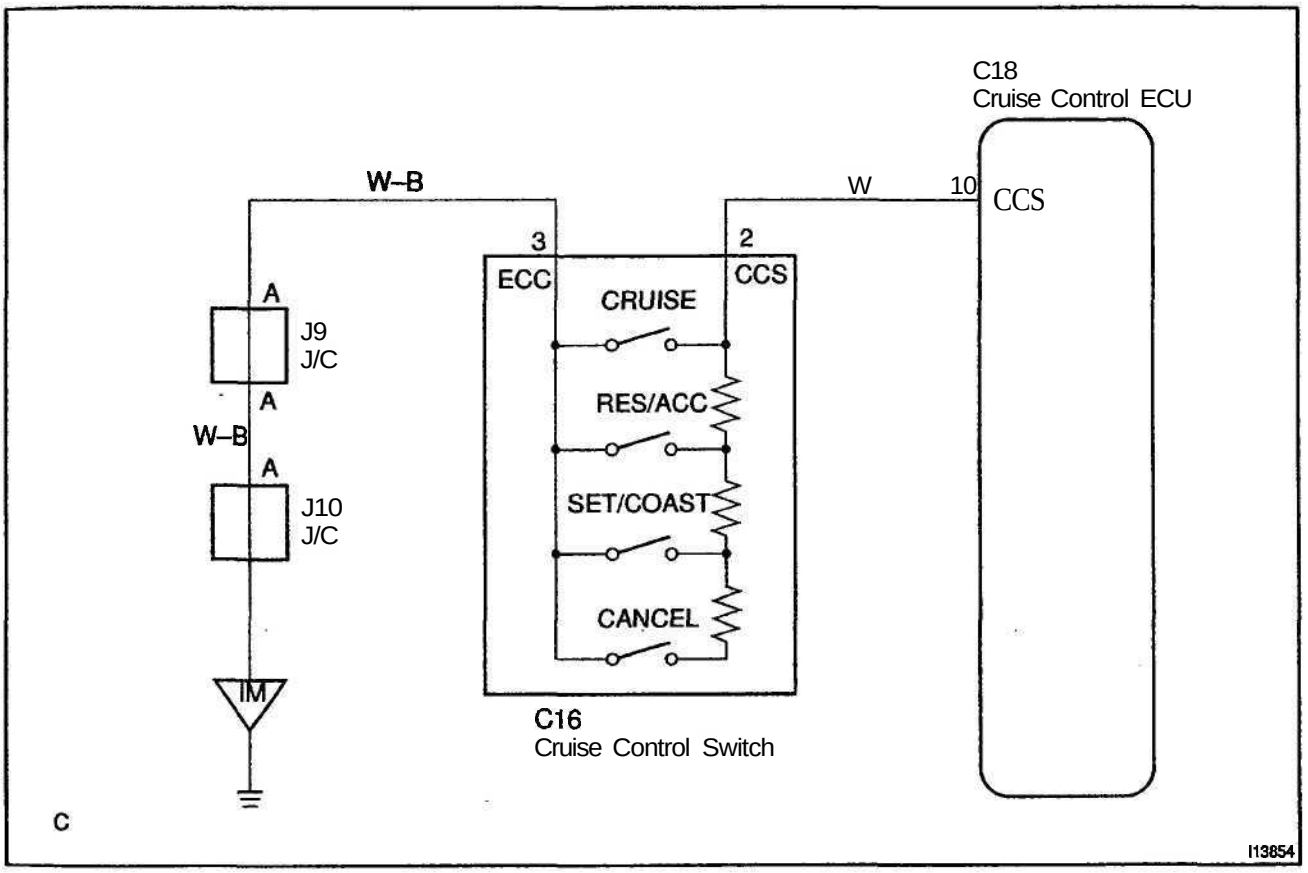

INSPECTION PROCEDURE

1	Input signal check.

Input Signal	Indicator Light Blinking Pattern
SET/COAST switch	ON / OFF — 2 Pulses
RESUME/ACCEL switch	ON / OFF — 3 Pulses
CANCEL switch	ON / OFF — SW OFF / SW ON

PREPARATION:

See input signal check on page DI–485.

CHECK:

Check the indicator light operation when each of the SET/COAST, RESUME/ACCEL and CANCEL is turned on.

OK:

SET/COAST, RESUME/ACCEL switch

The signals shown in the table on the left should be output when each switch is ON. The signal should disappear when the switch is turned OFF.

CANCEL switch

The indicator light goes off when the cancel switch is turned ON.

OK	Wait and see.

NG

2	Check voltage between terminals CCS of cruise control ECU connector and body ground.

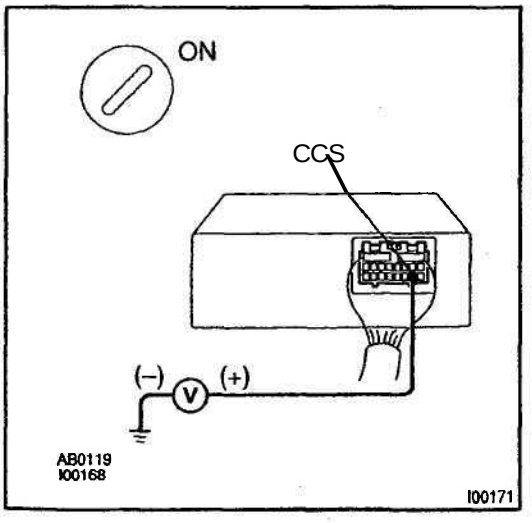

PREPARATION:

(a) Remove the ECU with connector still connected.

(b) Turn ignition switch ON.

CHECK:

Measure voltage between terminals 18 of ECU connector and body ground, when each of the SET/COAST, RESUME/ACCEL and CANCEL is turned ON.

Switch position	Resistance (V)
Neutral	10-16V
RES/ACC	0.8 – 3.7 V
SET/COAST	2.5 – 6.3 V
CANCEL	4.2 – 8.8 V

NG	Proceed to next circuit inspection shown in problem symptom table (See page DI–494).

OK

3	Check control switch.

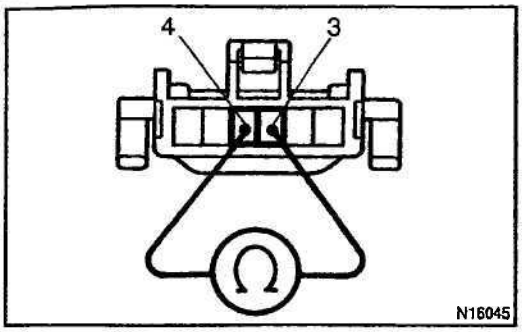

PREPARATION:
(a) Remove steering wheel center pad.
(b) Disconnect the control switch connector.

CHECK:
Measure resistance between terminals 3 and 4 of control switch connector when control switch is operated.

Switch position	Resistance (ft)
Neutral	∞ (No continuity)
RES/ACC	50 – 80
SET/COAST	180 – 220
CANCEL	400 – 440

NG → **Replace control switch.**

OK ↓

4	Check harness and connector between cruise control ECU and cruise control switch, cruise control switch and body ground (See page IN–30).

NG → **Repair or replace harness or connector.**

OK ↓

5	Input signal check (See step 1).

OK → Wait and see.

NG ↓

Check and replace cruise control ECU (See page IN–30).

Idle Signal Circuit

CIRCUIT DESCRIPTION

When the idle switch is turned ON, a signal is sent to the ECU. The ECU uses this signal to correct the discrepancy between the throttle valve position and the actuator position sensor value to enable accurate cruise control at the set speed. If the idle switch is malfunctioning, problem symptoms also occur in the engine, so also inspect the engine.

WIRING DIAGRAM

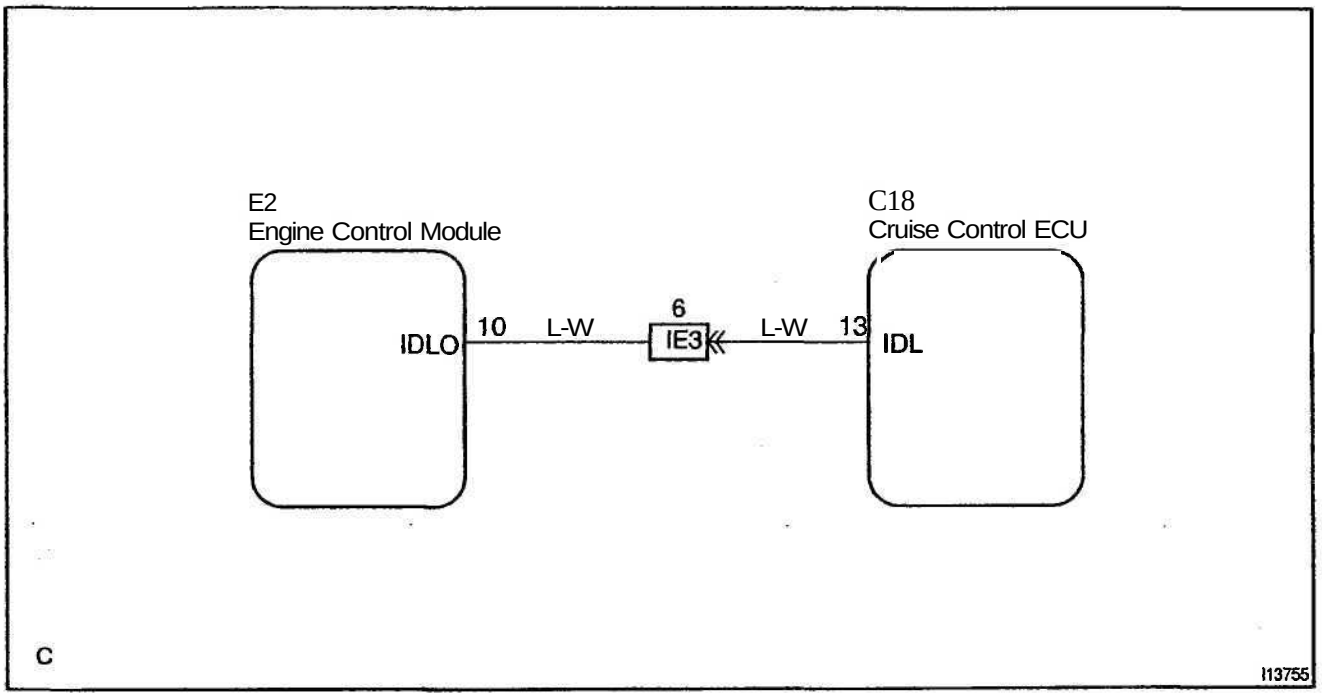

INSPECTION PROCEDURE

1	**Check voltage between terminal IDL of cruise control ECU connector and body ground.**

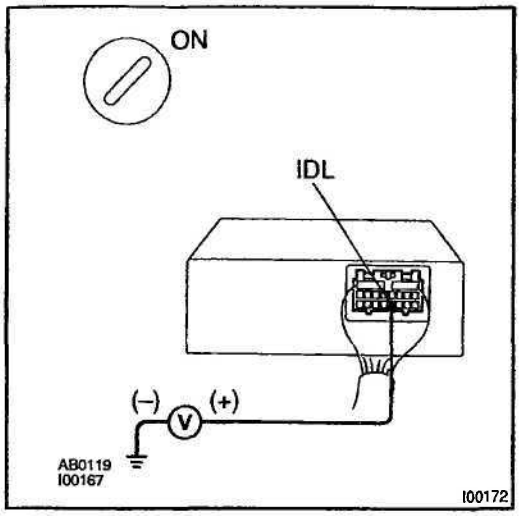

PREPARATION:

(a) Remove the ECU with connector still connected.
(b) Disconnect the ECM connector.
(c) Turn ignition switch ON.

CHECK:

Measure voltage between terminal IDL of ECU connector and body ground when the throttle valve is fully closed and fully opened.

OK:

Throttle valve position	Voltage
Fully opened	10-14V
Fully closed	Below 2 V

OK → **Proceed to next circuit inspection shown in problem symptom table (See page DI–494).**

NG

2	**Check harness and connector between ECM and throttle position sensor (See page IN–30).**

NG → **Repair or replace harness or connector.**

OK

3	Check throttle position sensor circuit (See page **DI–38).**

NG → **Replace** throttle position sensor.

OK

4	Check for open and short in harness and connector between cruise control ECU and ECM (See page IN–30).

NG → Repair or replace harness or connector.

OK →

Check and replace cruise control ECU (See page IN–30).

Stop Light Switch Circuit

CIRCUIT DESCRIPTION

When the brake pedal is depressed, the stop light switch sends a signal to the ECU. When the ECU receives this signal, it cancels the cruise control.

A fail–safe function is provided so that the cancel functions normally, even if there is a malfunction in the stop light signal circuit.

The cancel conditions are: Battery positive voltage at terminal STP-

When the brake is ON, battery positive voltage normally is applied through the STOP fuse and stop light switch to terminal STP- of the ECU, and the ECU turns the cruise control OFF.

If the harness connected to terminal STP- has an open circuit, terminal STP– will have battery positive voltage and the cruise control will be turned OFF.

Also, when the brake is ON, the magnetic clutch circuit is cut mechanically by the stop light switch, turning the cruise control OFF. (See page DI–498 for operation of the magnetic clutch)

WIRING DIAGRAM

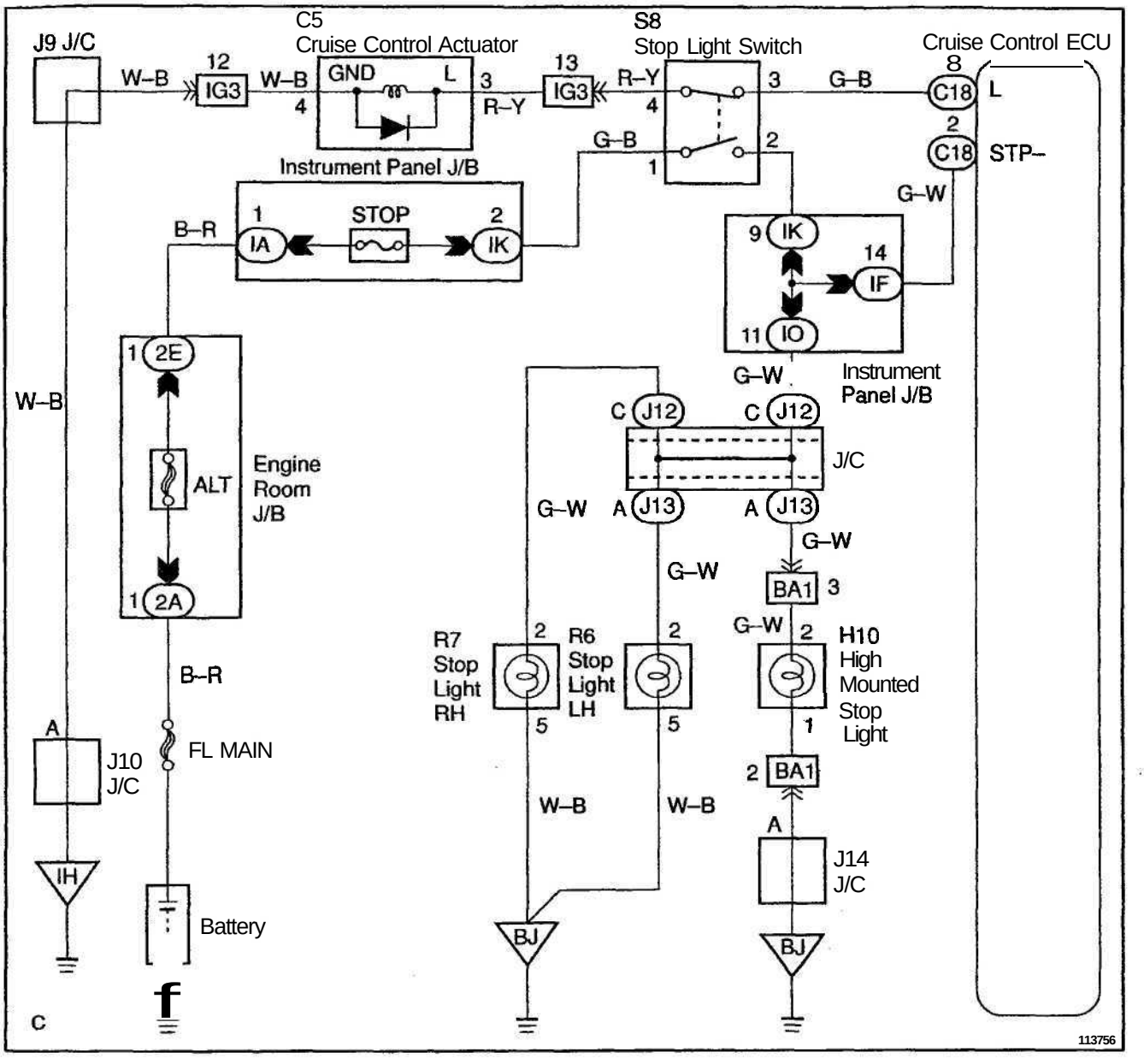

INSPECTION PROCEDURE

1	Check operation of stop light.

CHECK:

Check that stop light comes ON when brake pedal is depressed, and turns OFF when brake pedal is released.

NG → **Check stop light system (See page BE-2).**

OK

2	Input signal check.

CHECK:

(a) See input signal check on DI-485.

(b) Check the indicator light when the brake pedal is depressed.

OK:

The indicator light goes OFF when the brake pedal is depressed.

Input Signal	Indicator Light Blinking Pattern
Stop Light switch ON	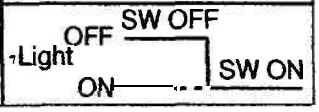

OK → **Proceed to next circuit inspection shown in problem symptom table (See page DI-494).**

NG

3	Check voltage between terminal STP- of cruise control ECU connector and body ground.

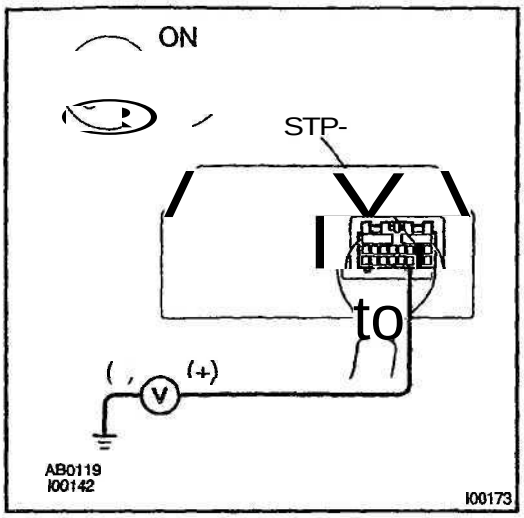

PREPARATION:
(a) Remove the ECU with connectors still connected.
(b) Turn ignition switch ON.

CHECK:
Measure voltage between terminal STP- of cruise control ECU connector and body ground, when the brake pedal is depressed and released.

OK:

Depressed	10-14V
Released	Below 1 V

OK → Proceed to next circuit inspection shown in problem symptom table (See page **DI–494**).

NG

4	**Check for open in harness and connectors between terminal STP- of cruise control ECU and stop light switch (See page IN–30).**

NG → **Repair or replace harness or connector.**

OK

Check and replace cruise control ECU (See page IN–30).

D0BU-14

Electronically Controlled Transmission Communication Circuit

CIRCUIT DESCRIPTION

When driving uphill under the cruise control, in order to reduce shifting due to ON–OFF overdrive operation and to provide smooth driving, when down shifting in the electronically controlled transmission occurs, a signal to prevent upshift until the end of the uphill slope is sent from the cruise control ECU to the electronically controlled transmission.

Terminal ECT of the cruise control ECU detects the shift change signal (output to electronically controlled transmission No. 2 solenoid) from the ECM.

If the vehicle speeds down, also when terminal ECT of the cruise control ECU receives down shifting signal, it sends a signal from terminal OD to ECM to cut overdrive until the end of the uphill slope, and the gear shifts are reduced and gear shift points in the electronically controlled transmission are changed.

WIRING DIAGRAM

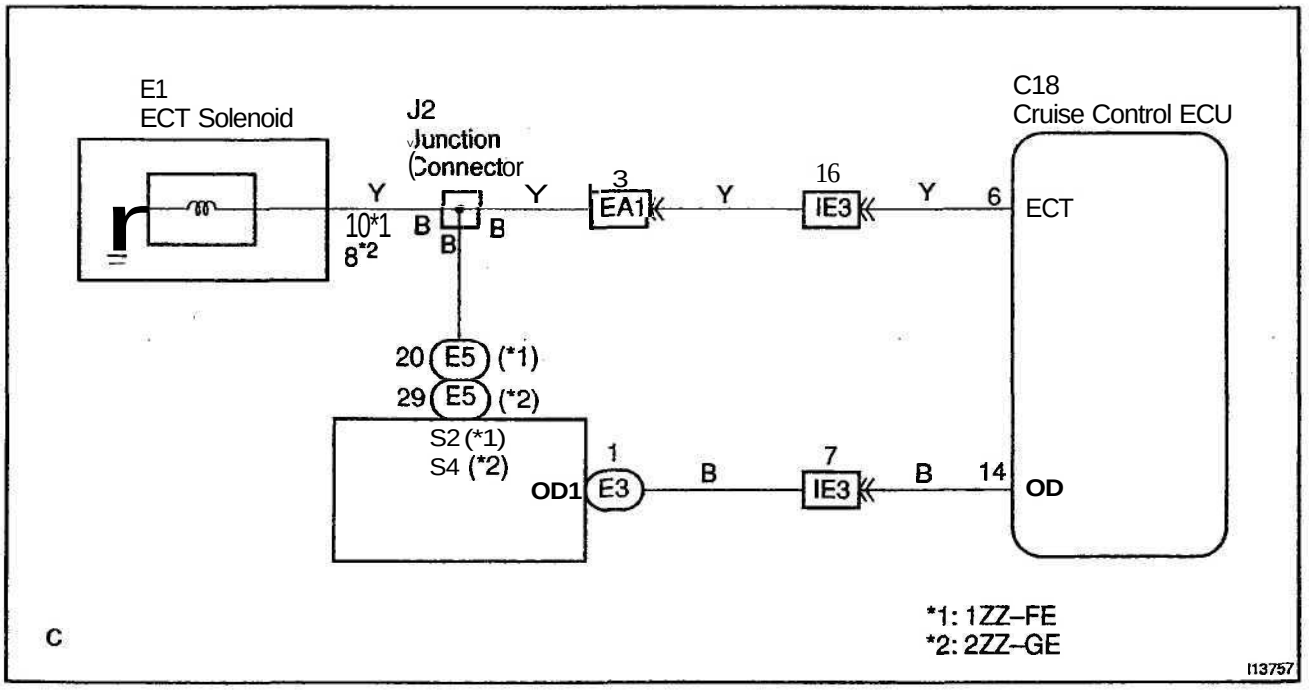

INSPECTION PROCEDURE

1	**Check operation of overdrive.**

PREPARATION:
Test drive after engine warms up.
CHECK:
Check that overdrive ON ↔ OFF occurs by operation of OD switch **ON–OFF.**

NG → **Check and repair electronically controlled transmission (See page DI–155 or DI–218).**

OK

2	**Check voltage between terminal OD of harness side connector of cruise control ECU and body ground.**

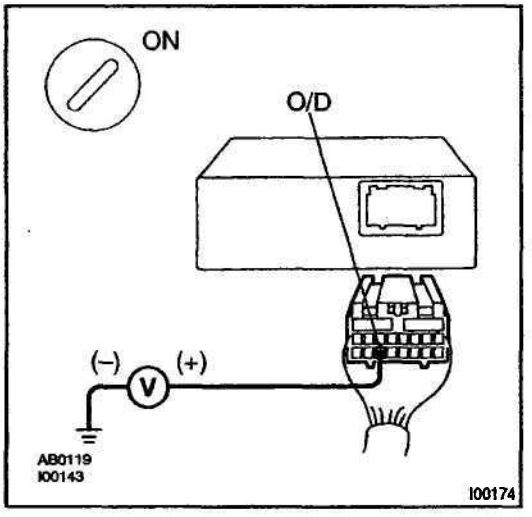

PREPARATION:
(a) Remove the ECU with connector still connected.
(b) Turn ignition switch ON.
(c) Disconnect the ECU connector.
CHECK:
Measure voltage between terminal OD of harness side connector of ECU and body ground.
OK:
Voltage: **10 – 14 V**

NG → **Go to step 5.**

OK

3	**Check voltage between terminal ECT of cruise control ECU connector and body ground (On test drive).**

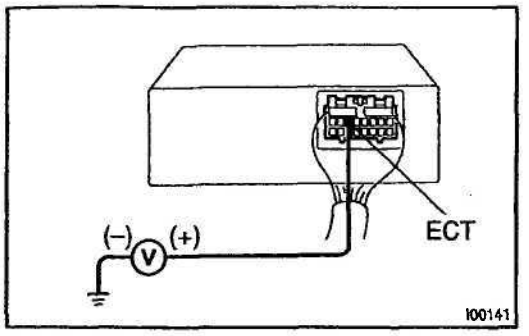

PREPARATION:

(a) Connect the ECU connector.

(b) Test drive after engine warms up.

CHECK:

Check voltage between terminal ECT of ECU connector and body ground when OD switch is ON and OFF.

OK:

OD switch position	Voltage
ON	8-14V
OFF	Below 0.5 V

OK → **Proceed to next circuit inspection shown in problem symptom table (See page DI–494).**

NG

4	**Check harness and connector between terminal ECT of cruise control ECU and electronically controlled transmission solenoid (See page IN–30).**

NG → Repair or replace harness or connector.

OK

Check and replace cruise control ECU.

5	**Check harness and connector between terminal OD of cruise control ECU and terminal OD1 of ECM (See page IN–30).**

NG → **Repair or replace harness or connector.**

OK

Check and replace cruise control ECU (See page IN–30).

Park/Neutral Position Switch Circuit

CIRCUIT DESCRIPTION

When the shift position is except D, a signal is sent from the park/neutral position switch to the ECU. When this signal is input during cruise control driving, the ECU cancels the cruise control.

WIRING DIAGRAM

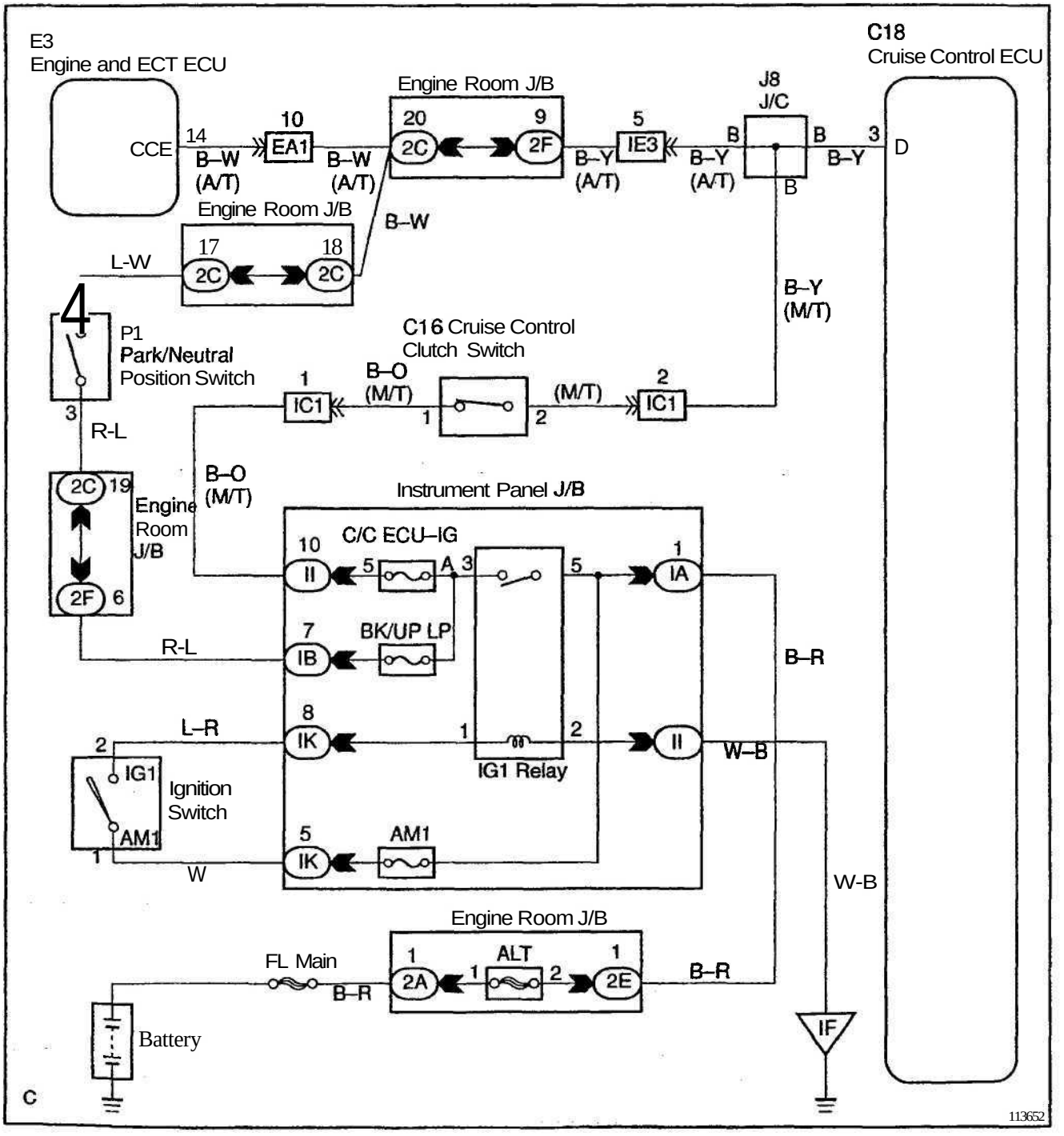

INSPECTION PROCEDURE

1	**Check starter operation.**

CHECK:
Check that the starter operates normally and that the engine starts.

NG → **Proceed to engine troubleshooting (See page DM).**

OK

2	**Input signal check.**

Input Signal	Indicator Light Blinking Pattern
Turn PNP switch OFF (Shift to positions except D)	Light ON / OFF; SW ON / SW OFF

PREPARATION:
See input signal check on page DI–485.
CHECK:
Check the indicator light when shifting into positions except D.
OK:

The indicator light goes off when shifting into positions except D.

OK → **Proceed to next circuit inspection shown in problem symptom table (See page DI–494).**

NG

3	Check voltage between terminal D of cruise control ECU connector and body ground.

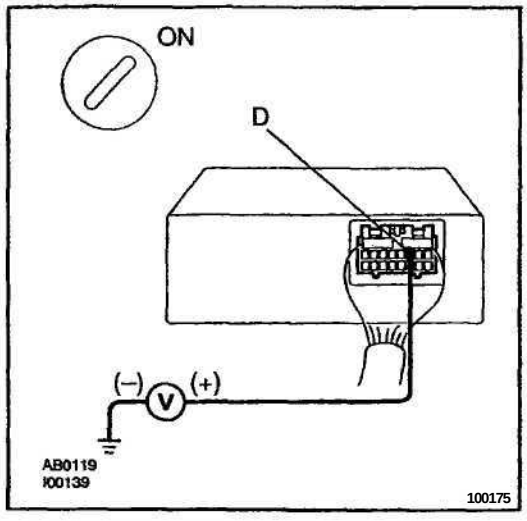

PREPARATION:
Turn ignition switch ON.
CHECK:
Measure voltage between terminal D of ECU connector and body ground when shifting into D position and other positions.
OK:

Shift Position	Voltage
D position	10-14V
Other positions	Below 1 V

OK → Proceed to next circuit inspection shown in problem symptom table (See page DI–494).

NG

4	Check harness and connector between cruise control ECU and park/neutral position switch (See page IN–30).

NG → Repair or replace harness or connector.

OK

Check and replace cruise control ECU (See page IN–30).

DI08W–05

Clutch Switch Circuit

CIRCUIT DESCRIPTION

When the clutch pedal is depressed, the clutch switch sends a signal to the cruise control ECU. When the signal is input to the cruise control ECU during cruise control driving, the cruise control ECU cancels cruise control.

WIRING DIAGRAM

Refer to PNP switch circuit on page DI–522.

INSPECTION PROCEDURE

1	Check starter operation.

CHECK:

Check that the starter operates normally and that the engine starts.

NG → **Proceed to engine troubleshooting.**

OK

2	Input signal check.

Input Signal	Indicator Light Blinking Pattern
Clutch switch OFF (Depress clutch pedal)	Light ON SW ON / OFF SW OFF

PREPARATION:

See input signal check on page DI–485.

CHECK:

Check the indicator lights when clutch pedal is depressed.

OK:

The indicator light goes off when shifting into clutch pedal is depressed.

OK → **Proceed to next circuit inspection shown in problem symptom table (See page DI–494).**

NG

3	Check voltage between terminal D of cruise control ECU and body ground.

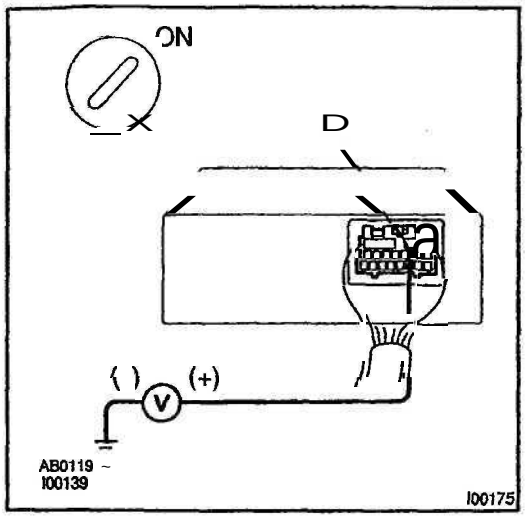

PREPARATION:
Turn ignition switch ON.
CHECK:
Measure voltage between terminal D of cruise control ECU connector and body ground when clutch pedal is depressed and pushed in.
OK:

Shift Position	Voltage
Clutch pedal depressed	10 – 14 V
Clutch pedal pushed in	Below 1 V

OK → **Proceed to next circuit inspection shown in problem symptom table (See page DI–494).**

NG

4	**Check for open in harness and connector between ECU and GAUGE fuse (See page IN–30).**

NG → **Repair or replace harness or connector.**

OK

Check and replace cruise control ECU (See page IN–30).

ECU Power Source Circuit

CIRCUIT DESCRIPTION

The ECU power source supplies power to the actuator and sensors, etc, when terminal GND and the cruise control ECU case are grounded.

WIRING DIAGRAM

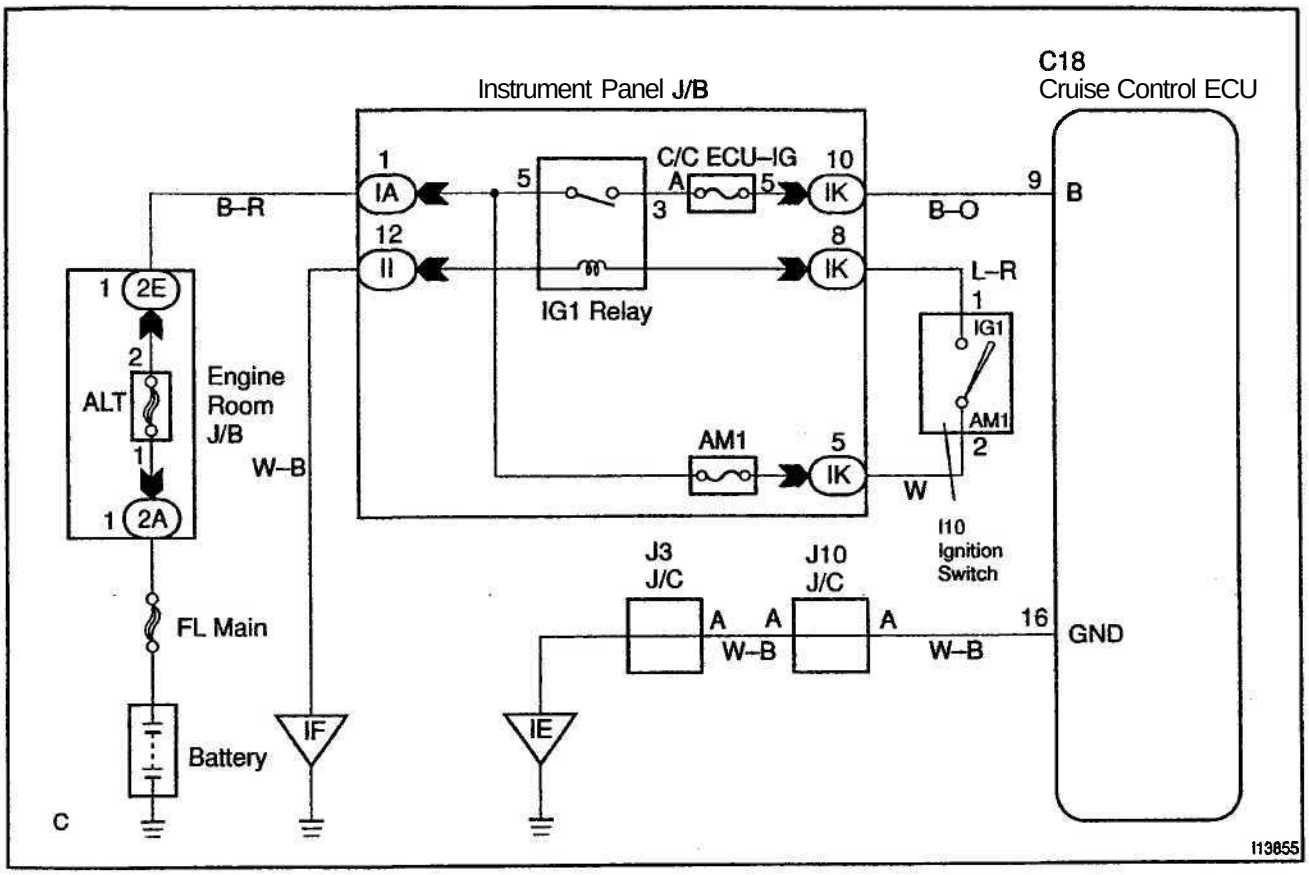

INSPECTION PROCEDURE

1	Check ECU–IG fuse.

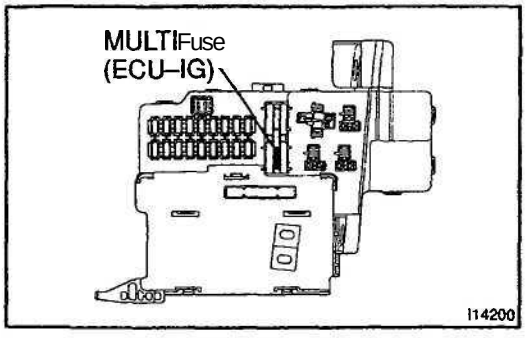

PREPARATION:
Remove the ECU–IG fuse from instrument panel junction block.
CHECK:
Check continuity of ECU-IG fuse.
OK:
Continuity

NG → **Check for short in all the harness and components connected to ECU–IG fuse.**

OK

2	Check voltage between terminals B and GND of cruise control ECU connector.

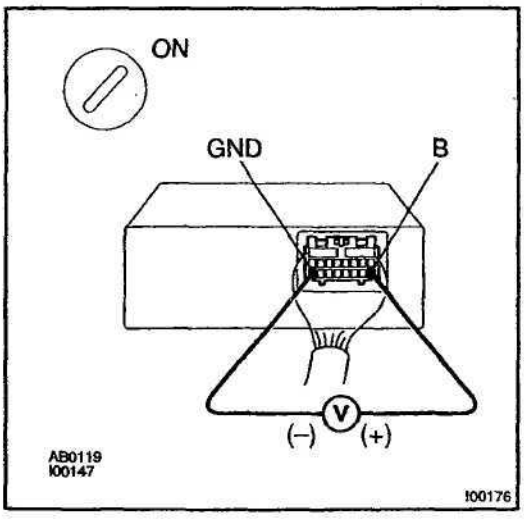

PREPARATION:
(a) Remove the ECU with connector still connected.
(b) Turn ignition switch ON.
CHECK:
Measure voltage between terminals B and GND of ECU connector.
OK:
Voltage: 10 – 14 V

OK → **Proceed to next circuit inspection shown in problem symptom table (See page DI–494).**

NG

3	**Check resistance between terminal GND of cruise control ECU connector and body ground.**

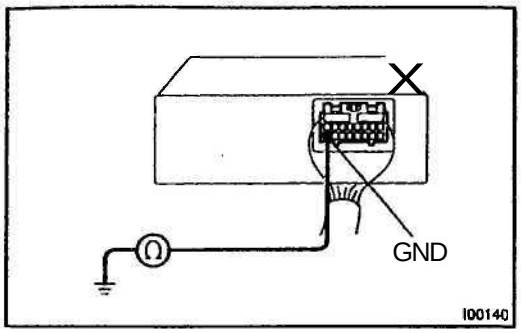

CHECK:
Measure resistance between terminal GND of ECU connector and body ground.
OK:

Resistance: Below 1 Ω

NG → **Repair or replace harness or connector.**

OK

Check and repair harness and connector between cruise control ECU and battery (See page IN–30).

CRUISE MAIN Indicator Light Circuit

CIRCUIT DESCRIPTION

When the cruise control main switch is turned ON, CRUISE MAIN indicator light lights up.

WIRING DIAGRAM

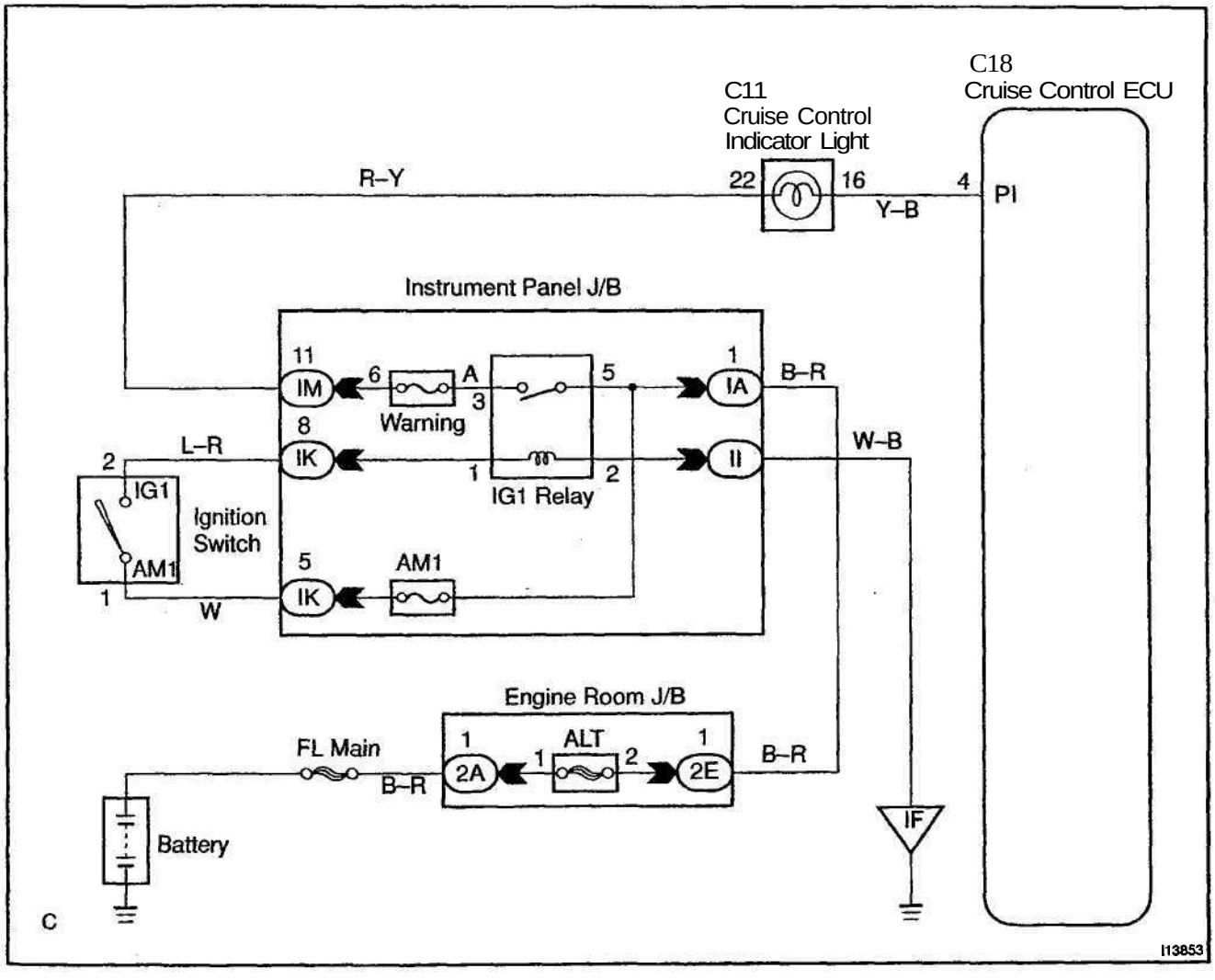

INSPECTION PROCEDURE

1	Check voltage between terminals PI and GND of cruise control ECU connector.

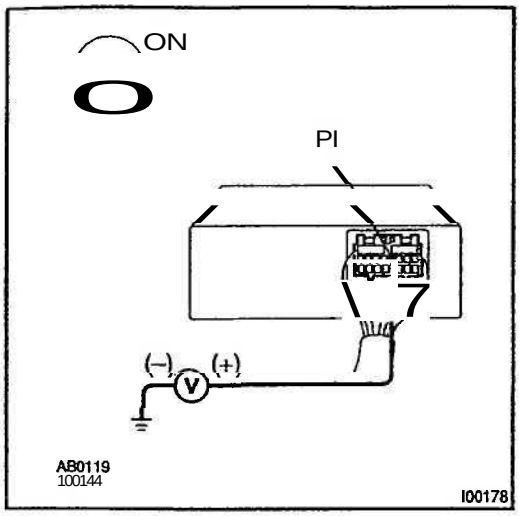

PREPARATION:
Tun ignition switch ON.
CHECK:
Measure voltage between terminals PI and GND of cruise control ECU connector when main switch is ON and OFF.
OK:

Switch position	Voltage
OFF	10-16V
ON	Below 1.2 V

OK → **Proceed to next circuit inspection shown in problem symptom table (See page DI–494).**

NG

2	Check combination meter (See page **BE–42).**

NG → Replace combination meter.

OK

Check and replace cruise control ECU (See page IN–30).

D0291-16

Diagnosis Circuit

CIRCUIT DESCRIPTION

This circuit sends a signal to the ECU that outputs DTC.

WIRING DIAGRAM

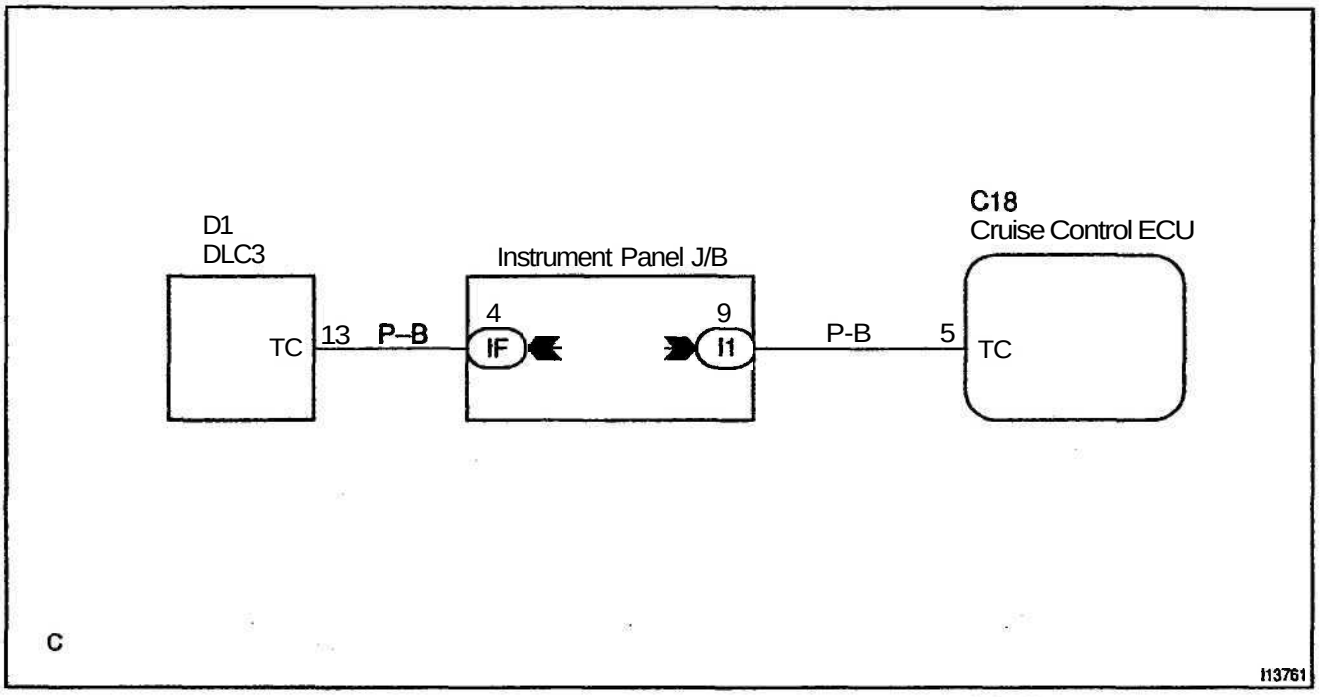

INSPECTION PROCEDURE

1	Check voltage between terminals Tc and E_1 of DLC3.

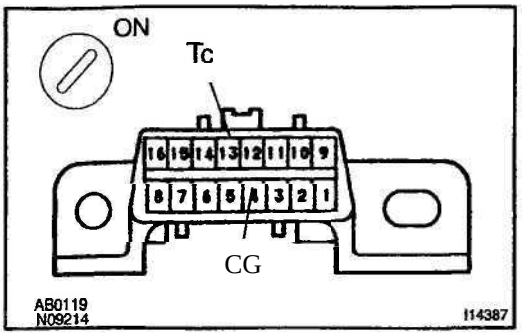

PREPARATION:
Turn ignition switch ON.
CHECK:
Measure voltage between terminals Tc and E_1 of DLC3.
OK:
Voltage: 10 – 14 V

OK → Proceed to next circuit inspection shown in problem symptom table (See page **DI–494).**

NG

2	Check harness and connector between cruise control ECU and **DLC3, DLC3** and body ground (See page **IN–30).**

NG → **Repair or replace harness or connector.**

OK

Check and replace cruise control ECU (See page **IN–30).**

Actuator Control Cable

INSPECTION PROCEDURE

1	Actuator control cable inspection

OK:

(a) Check that the actuator and control cable throttle link are properly installed and that the cable and link are connected correctly.
(b) Check that the actuator and bell crank operate smoothly.
(c) Check that the cable is not loose or too tight.

OK:

Freeplay: less **than 10 mm**

HINT:

- If the control cable is very loose, the vehicle's loss of speed going uphill will be large.
- If the control cable is too tight, the idle RPM will become high.

BODY CONTROL SYSTEM

HOW TO PROCEED WITH TROUBLESHOOTING

D652C-02

HINT:

This ECU is connected to the multiplex communication system. Therefore, be sure to check that there is no troubles in the multiplex communication system before performing the trouble shooting.

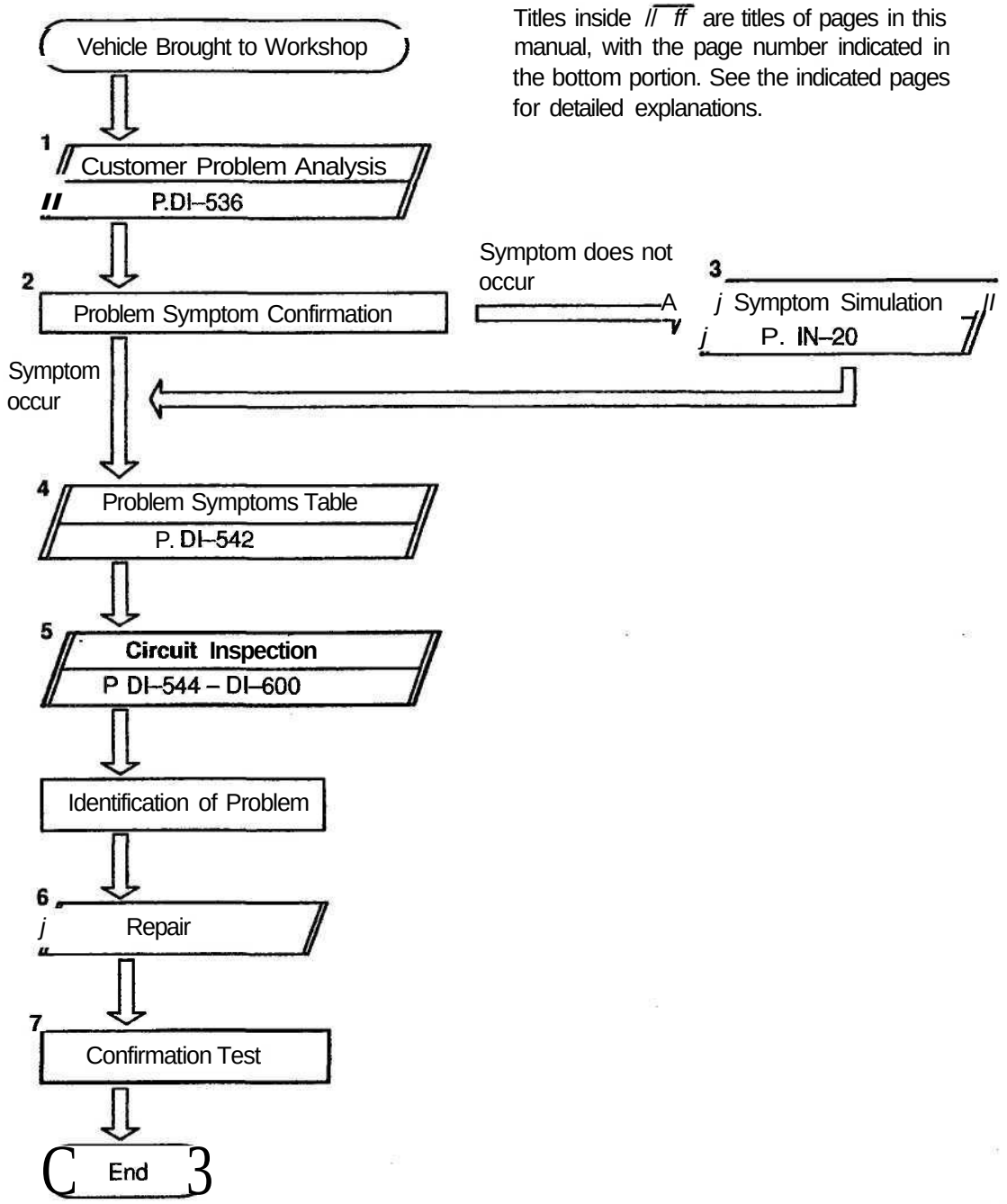

Titles inside // ff are titles of pages in this manual, with the page number indicated in the bottom portion. See the indicated pages for detailed explanations.

Step 6, 8 : Diagnostic steps permitting the use of the hand–held tester .

DI62D-02

CUSTOMER PROBLEM ANALYSIS CHECK

BODY CONTROL SYSTEM Check Sheet

Inspector's name: _____

Customer's Name		Registration No.	
		Registration Year	
		Frame No.	
Date Vehicle Brought in	/ /	Odometer Reading	km Mile

Date Problem First Occurred		/ /
Frequency Problem Occurs		☐ **Constant** ☐ **Sometimes (times per day, month)** ☐ **Once only**
Weather Conditions When Problem Occurred	**Weather**	☐ **Fine** ☐ **Cloudy** ☐ **Rainy** ☐ **Snowy** D **Various/ Others**
	Outdoor Temperature	☐ **Hot** ☐ **Warm** ☐ **Cool** ☐ **Cold (Approx. °F (°C))**

Malfunction System	☐ Key Reminder System
	☐ Light Control System
	☐ Daytime Running Light System
	☐ Combination Meter (Open door warning light)
	☐ Light Auto Turn Off System
	☐ Illuminated Entry System
	☐ Seat Belt Warning
	☐ Power Window Control System
	☐ Power Door Lock Control System
	☐ Wireless Door Lock Control System
	☐ Others

DI6QU-01

PARTS LOCATION

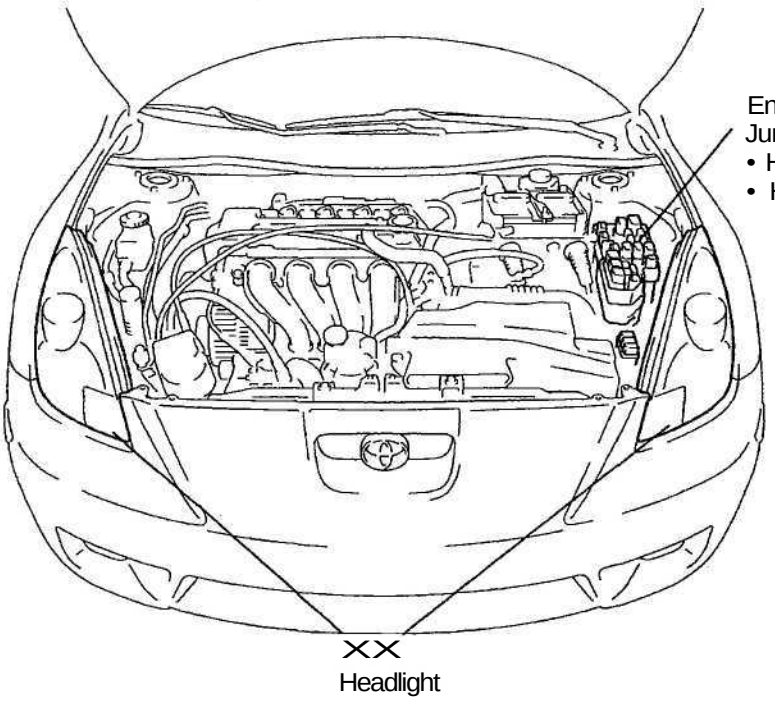

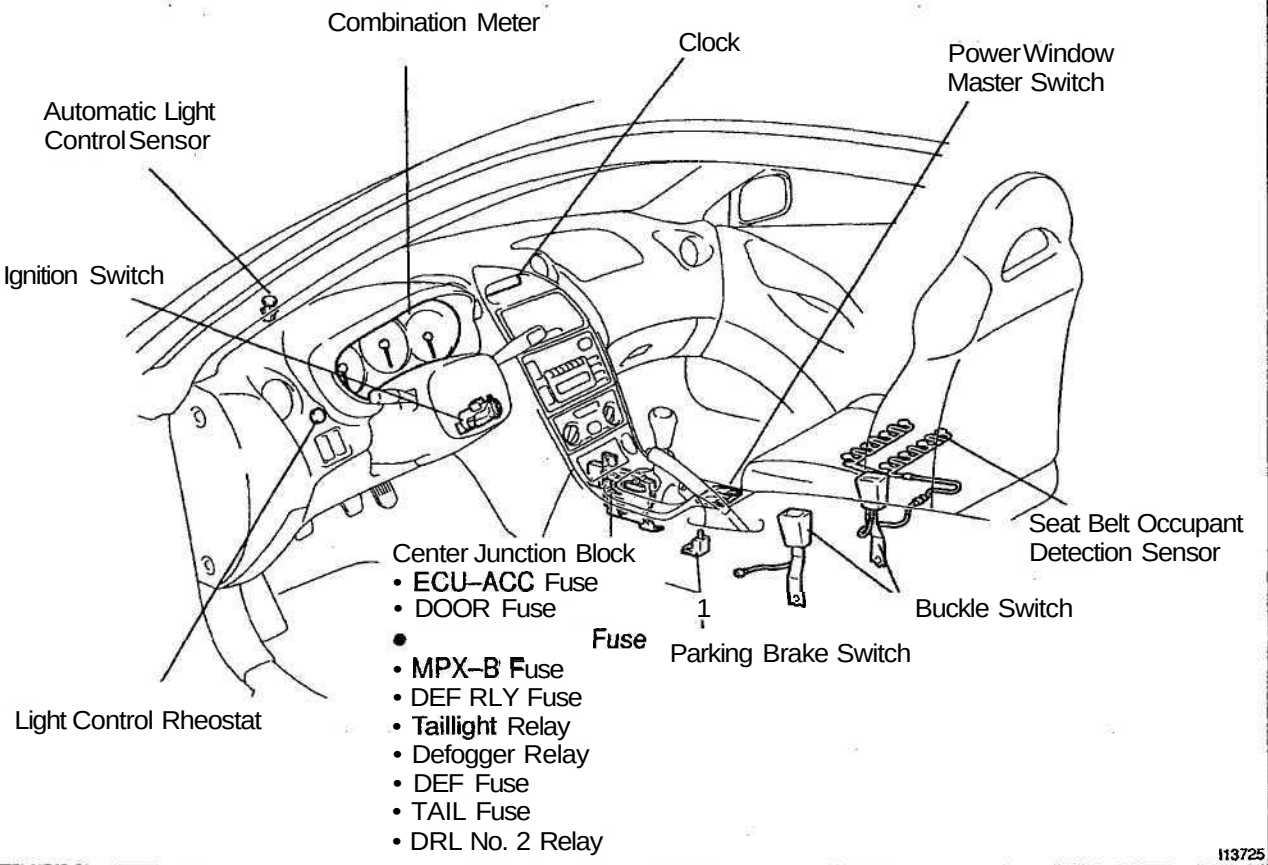

I13725

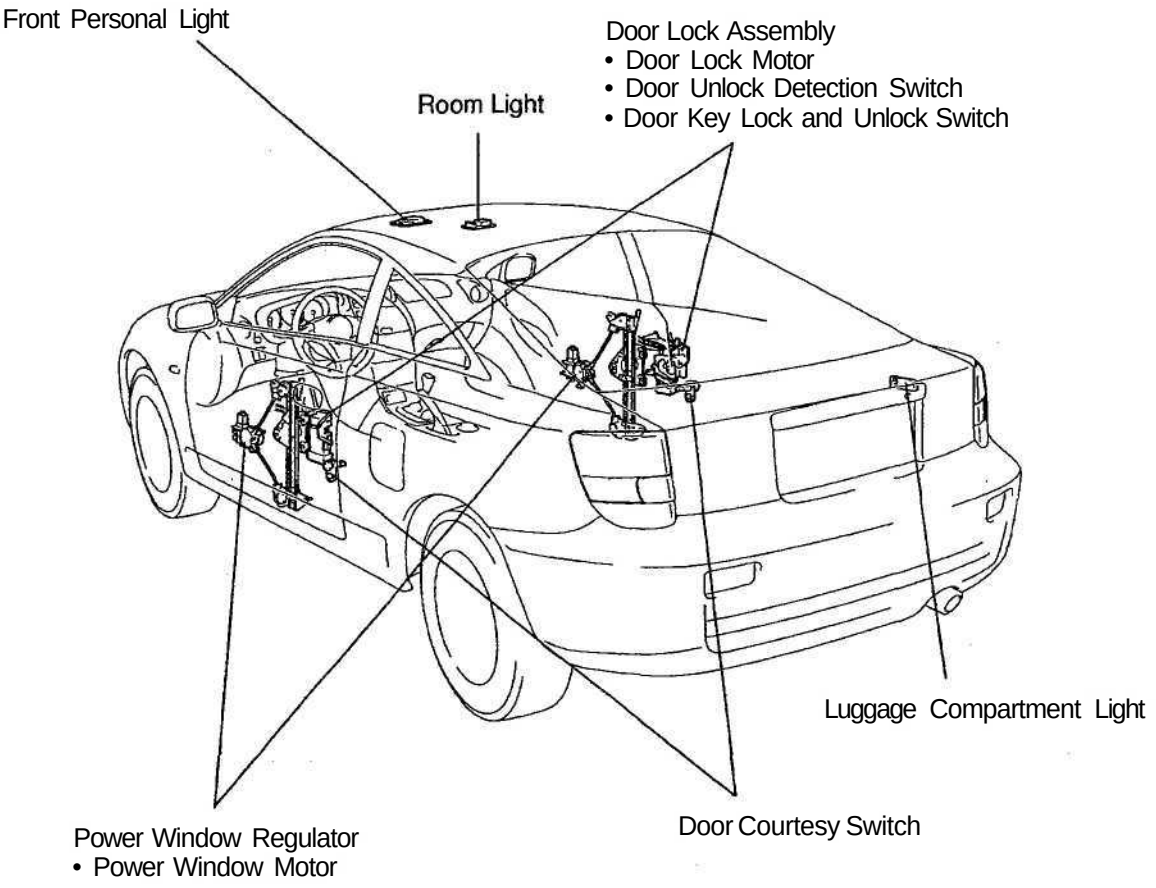
Front Personal Light
Room Light
Door Lock Assembly
• Door Lock Motor
• Door Unlock Detection Switch
• Door Key Lock and Unlock Switch
Luggage Compartment Light
Power Window Regulator
• Power Window Motor
Door Courtesy Switch

I13726

DI6QV-01

TERMINALS OF ECU

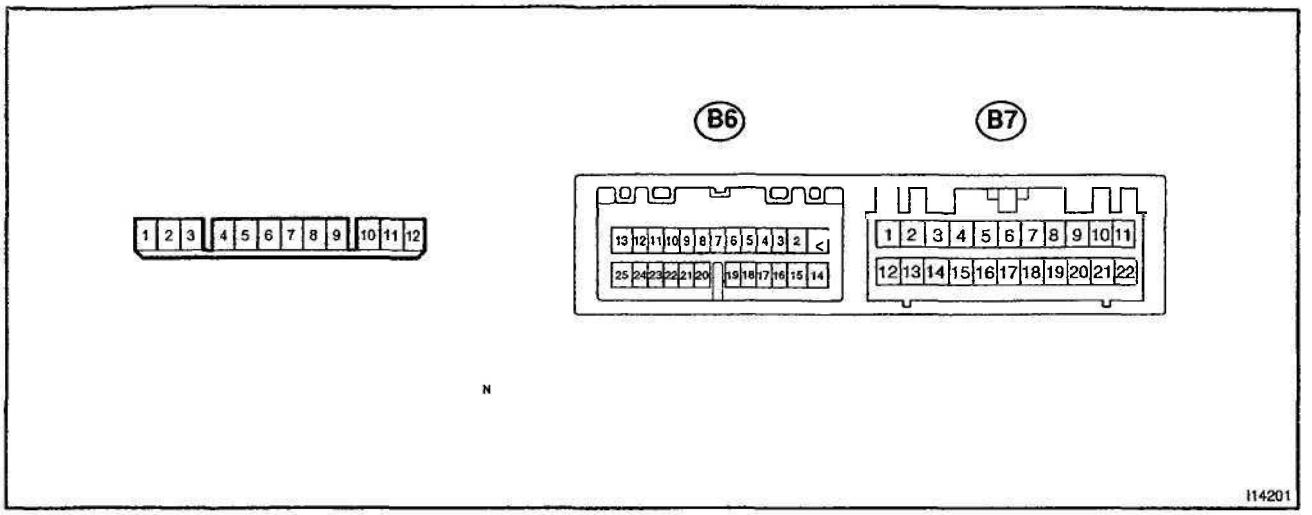

Terminals No. (Symbols)	Wiring Color	Condition	STD Voltage (V)
1 -11 (TRLY – E)	–	Light control switch OFF	10 – 14 V
		Light control switch TAIL or HEAD	Below 1 V
2-11 (DEFB - E)	–	Constant	10-14V
3-11 (IG – E)	–	Ignition switch OFF or ACC	Below 1 V
		Ignition switch ON	10-14V
4-11 (DEF – E)	–	Defogger switch OFF	10-14V
		Defogger switch ON	Below 1 V
5-11 (B – E)	–	Constant	10-14V
6-11 (L2 – E)	–	Door key lock and unlock switch OFF	Approx. 5 V
		Door key lock and unlock switch ON	Below 1 V
7-9 (ACT– –ACT+)	–	Door lock operating	10 – 14 V
8-11 (B – E)	–	Constant	10-14V
10-11 (HRLY – E)	–	Light control switch OFF or TAIL	10-14V
		Light control switch HEAD	Below 1 V
11 – Bodyground (E - Body ground)	–	Constant	Below 1 V
12-11 (ACC – E)	–	Ignition switch OFF	Below 1 V
		Ignition switch ACC or ON	10-14V
B6–1 – 11 (PWS-E)	GR	Sliding roof ECU communication circuit	–
B6–2 – 11 (BLVL – E)	R	Parking brake switch ON (parking brake is used)	Below 1 V
		Parking brake switch OFF (parking brake is not used)	Approx. 5V
B6–3 – 11 (CLTS – E)	LG – B	Automatic light control sensor communication circuit	–
B6–4 – 11 (CLTB – E)	G – W	Automatic light control sensor communication circuit	–

Terminals No. (Symbols)	Wiring Color	Condition	STD Voltage (V)
B6–5 – 11 (T – E)	LG	Light control switch OFF	10-14V
		Light control switch TAIL or HEAD	Below 1 V
B6–9 – 11 (KSW - E)	Y	Key is inserted	Below 1 V
		Key is not inserted	10-14V
B6–10 – 11 (LP – E)	R – W	Each door are opened	Below 2 V
		All door are closed	10-14V
B6–11 – 11 (SG1 - E)	W-L	Key is inserted	Below 1 V
		Key is not inserted	10-14V
B6–12 – 11 (HF – E)	P-B	Light control switch HIGH beam or FLASH	Below 1 V
		Light control switch OFF or LOW beam	Approx. 5.7 V
B6–13 – 9 (ACTD – ACT+)	L	Driver door is operating	10-14V
B6–14 – 11 (HORN – E)	L – B	Horn sound	Below 1 V
		Horn does not sound	10-14V
B6–16 – 11 (MPX1 - E)	R-L	Multiplex communication circuit	–
B6–17 – 11 (L – E)	Y-G	Engine running	Below 1 V
B6–18 – 11 (H-E)	R-L	Light control switch OFF or TAIL	Approx. 5.7 V
		Light control switch HEAD	Below 1 V
B6–20 – 11 (LSWP – E)	G	Except driver's door is unlocked	Below 1 V
		Except driver's door is locked	Approx. 5.7 V
B6–21 – 11 (LSWD – E)	B	Driver door is unlocked	Below 1 V
		Driver door is locked	Approx. 5.7 V
B6–22 – 11 (UL2 – E)	L – W	Passenger door key lock and unlock switch OFF	Approx. 5.0 V
		Passenger door key lock and unlock switch ON	Below 1 V
B6–24 – 11 (CLTE – E)	LG-R	Automatic light control sensor communication circuit	–
B6–25 – 11 (UL3 – E)	L – W	Driver door key lock and unlock switch OFF	Approx. 5.0 V
		Driver door key lock and unlock switch ON	Below 1 V
B7–1 – 11 (SG2 – E)	W-L	Constant	Below 1 V
B7–2 – 11 (SG3 – E)	W	Constant	Below 1 V
B7–3 – 11 (FU– – E)	BR-W	Constant	Below 1 V
B7–7 – 11 (DBKL – E)	L	Driver seat belt buckle switch ON (belt fastened)	Below 1 V
		Driver seat belt buckle switch OFF (belt unfastened)	10-14V
B7–18 – 11 (BLTW – E)	P	Driver seat belt buckle switch ON (belt fastened)	Below 1 V
		Driver seat belt buckle switch OFF (belt unfastened)	10-14V
B7–9 – 11 (PRG-E)	R-B	Wireless door lock control receiver communication circuit	–
B7–10 – 11 (RDA – E)	Y	Wireless door lock control receiver communication circuit	–
B7-11 -11 (P/W – E)	Y-B	Key–off power window operation	10-14V

Terminals No. (Symbols)	Wiring Color	Condition	STD Voltage (V)
B7–12 – 11 (FUA – E)	Y – R	Ignition switch ON and fuel sender gauge float DOWN	Approx. 0.3 V
		Ignition switch ON and fuel sender gauge float UP	Approx. 4.6 V
B7–13 – 11 (FU+ – E)	Y – G	Ignition switch ON	Approx. 5.0 V
B7–14 – 11 (PBKL – E)	L – Y	Passenger seat belt buckle switch ON (belt fastened)	Below 1 V
		Passenger seat belt buckle switch OFF (belt unfastened)	Approx. 5.0 V
B7–15 – 11 (L1 – E)	V – W	Door lock manual switch OFF or UNLOCK	Below 1 V
		Door lock manual switch LOCK	Approx. 5.0 V
B7–16 – 11 (UL1 – E)	P – G	Door lock manual switch OFF or LOCK	Below 1 V
		Door lock manual switch UNLOCK	Approx. 5.0 V
B7–17 – 11 (DRL-E)	L-W	Daytime running light system operating when DRL ON	Below 1 V
B7–4 – 11 (SG4 – E)	W – B	Sport mode switch OFF	10-14V
		Sport mode switch ON	Below 1 V
B7–19 – 11 (PKB – E)	R – B	Parking brake is used	Below 1 V
		Parking brake is not used	10-14V
B7–20 – 11 (DCTY – E)	R – Y	Driver door opened	Below 1 V
		Driver door closed	10-14V
B7–21 – 11 (PCTY – E)	R	Passenger door opened	Below 1 V
		Passenger door closed	10-14V
B7–22 – 11 (LGCY – E)	LG	Luggage door opened	Below 1 V
		Luggage door closed	10-14V

D62G-02

PROBLEM SYMPTOMS TABLE

DOOR LOCK CONTROL

Symptom	Suspect Area	See page
Lock or unlock cannot be operated with door lock control S/W.	1. Door lock control switch circuit (Master switch) 2. Body ECU	DI–571 IN–30
Door key linked function does not operate.	1. Door key lock and unlock switch circuit 2. Body ECU	DI–578 IN–30
Key confinement prevention function does not operate.	1. Key unlock switch circuit 2. Body ECU	DI–563 IN–30
Does not lock and unlock each door only.	1. Door lock motor circuit 2. Body ECU	DI–574 IN–30
Luggage compartment door opener function does not operate.	1. Luggage component door courtesy switch circuit 2. Body ECU	DI–582 IN–30

WIRELESS DOOR LOCK CONTROL

Symptom	Suspect Area	See page
AN function of wireless door lock control system do not operate.	1. Transmitter 2. Wireless tuner circuit 3. Key unlock warning switch circuit 4. Body ECU	BE-73 DI–584 DI–563 IN–30
Lock (or unlock) function does not operate.	1. Door key lock and unlock switch circuit 2. Door unlock detection switch circuit 3. Body ECU	DI–578 DI–576 IN–30
Automatic lock function operates even if any door is opened within 30 seconds after all doors are unlocked by wireless door lock control system.	1. Door courtesy switch circuit 2. Body ECU	DI–580 IN–30

ILLUMINATED ENTRY

Symptom	Suspect Area	See page
Illuminated entry does not operate.	1. Illumination circuit 2. Body ECU	DI–560 IN–30

HEADLIGHT AND TAILLIGHT SYSTEM:

Symptom	Suspect Area	See page
Headlight does not light up.	1. Light control switch circuit 2. Headlight control relay circuit 3. Body ECU	DI–556 DI–550 IN–30
Taillight does not light up.	1. Light control switch circuit 2. Taillight control relay circuit 3. Body ECU	DI–556 DI–548 IN–30
Automatic light control system does not operate.	1. Automatic light control sensor circuit 2. Light control switch circuit 3. Body ECU	DI–598 DI–556 IN–30
Auto turn–off system does not operate.	1. Driver door courtesy switch circuit 2. Body ECU	DI–580 IN–30

OTHERS

Symptom	Suspect Area	See page
Does not turn off the driver seat beK warning light	1. Driver buckle switch circuit 2. Body ECU	DI–565 IN–30
Does not turn off the passenger seat beK warning light.	1. Passenger buckle switch circuit 2. Body ECU	DI–565 IN–30
Rear window defogger does not operate.	1. Defogger relay circuit 2. Defogger switch 3. Body ECU	DI–586 BE-55 IN–30
Body ECU does not operate.	1. Power source circuit 2. Body ECU	DI–544 IN–30
Fuel sender gauge does not operate.	1. Fuel sender gauge circuit 2. Combination meter system 3. Body ECU	DI–588 BE–46 IN–30

CIRCUIT INSPECTION

Power Source Circuit

CIRCUIT DESCRIPTION

This circuit provides power to operate the Body ECU.

WIRING DIAGRAM

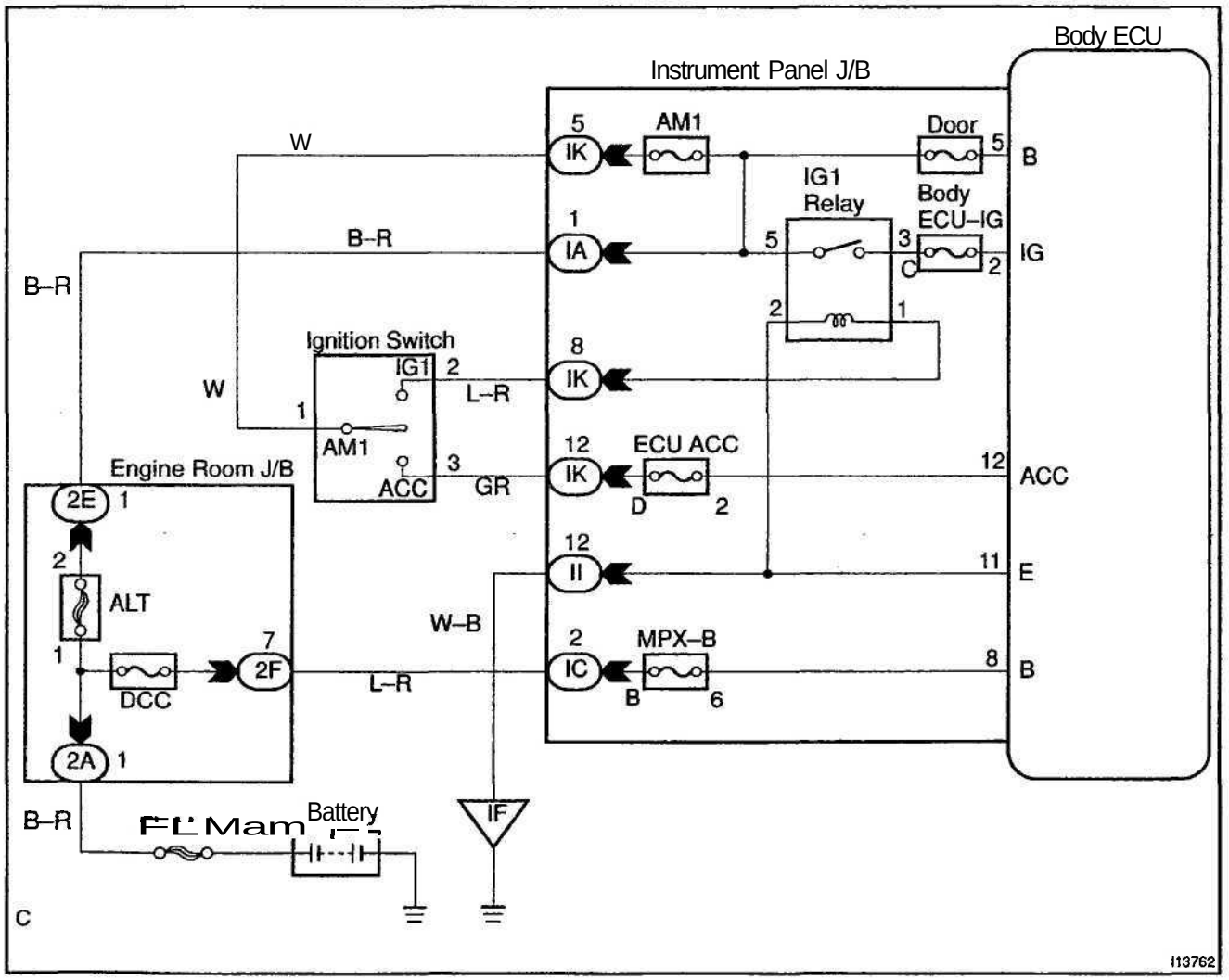

INSPECTION PROCEDURE

1	**Check MPX-B, DCC, AM1 and DOOR fuse.**

CHECK:
Check continuity of MPX-B, DCC, AM1 and DOOR fuse.
OK:

Continuity

NG → **Replace the failure fuse.**

OK

2	**Check voltage between terminals B, B and E of Body ECU connector.**

PREPARATION:
(a) Turn ignition switch OFF.
(b) Disconnect the Body ECU connector.
CHECK:
Measure voltage between terminals B, B and E.
OK:

Voltage: 10 – 14V

OK → **Proceed to next circuit inspection shown on problem symptoms table (See page DI–542).**

NG

3	**Check wireharness and connector between Body ECU and body ground (See page IN–30).**

NG → **Repair or replace wireharness or connector.**

OK

Check and repair wireharness and connector between Body ECU and battery.

D6GX-01

Ignition Switch Power Source Circuit

CIRCUIT DESCRIPTION

When the ignition switch is turned to the ACC position, battery voltage is applied to the terminal ACC of the ECU and when the ignition switch is turned to the ON position, battery voltage is applied to the terminal IG of the ECU.

WIRING DIAGRAM

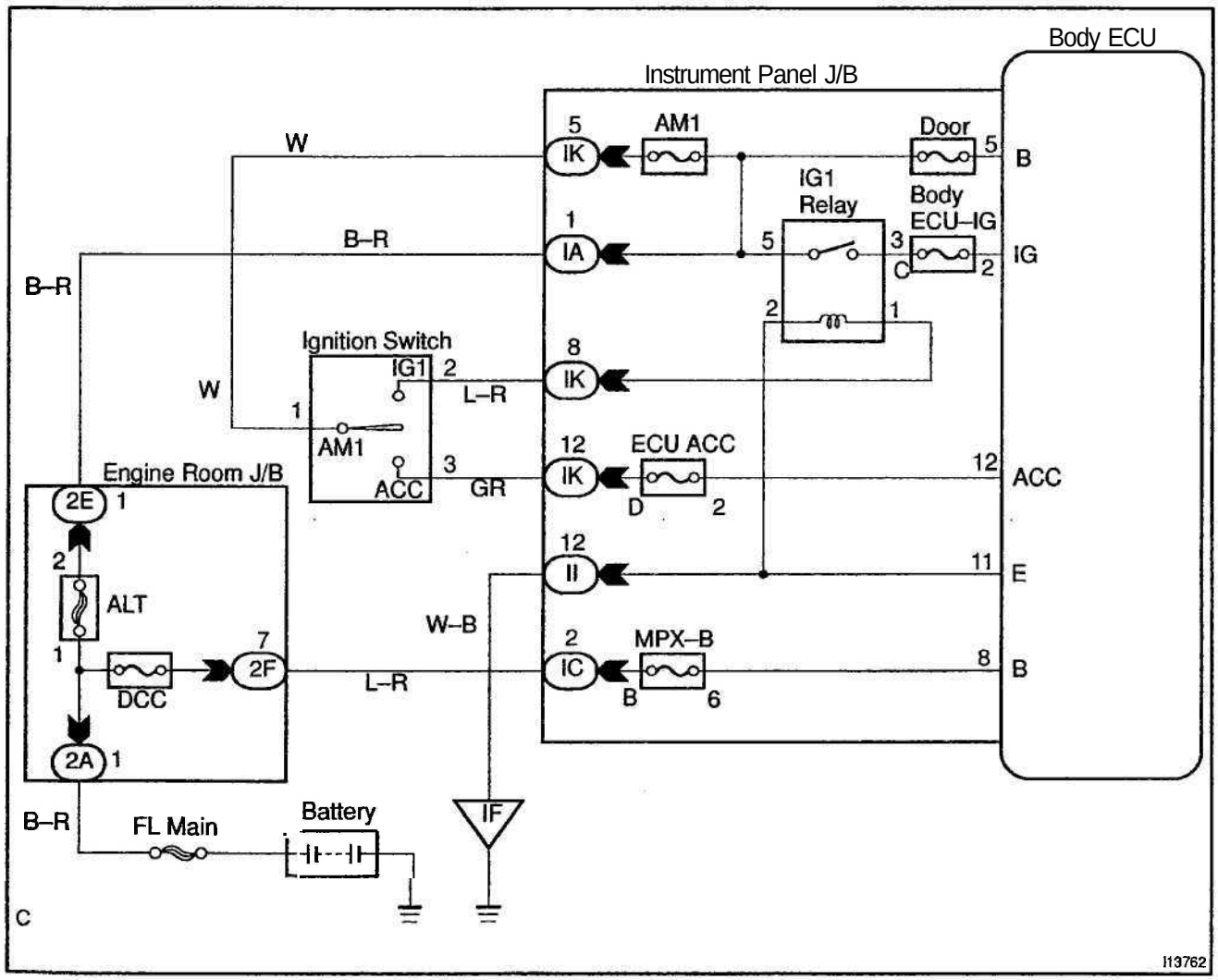

INSPECTION PROCEDURE

1	Check BODY **ECU–IG** and ECU-ACC fuse.

CHECK:
Check continuity of BODY ECU–IG and ECU-ACC fuse.

OK:

Continuity

NG → Replace the failure **fuse.**

OK

2	Check voltage between terminals ACC, **IG** and GND of Body ECU connector.

PREPARATION:
Turn ignition switch ON.

CHECK:
Measure voltage between terminals ACC, IG, and GND.

OK:

Voltage: **10 – 14V**

OK → Proceed to next circuit inspection shown on problem symptoms table (See page **DI–542).**

NG

3	Check wireharness and connector between Body ECU and body ground (See page **IN–30).**

NG → Repair or replace wireharness or connector.

OK

Check and repair wireharness and connector between Body ECU and battery.

D6GY-01

Taillight Relay Circuit

CIRCUIT DESCRIPTION

Taillight relay will be "ON" by operating the taillight switch. The transistor which activates the tail light relay has two sorts: one activates by the tail light switch for fail safe and the other activates by CPU.

WIRING DIAGRAM

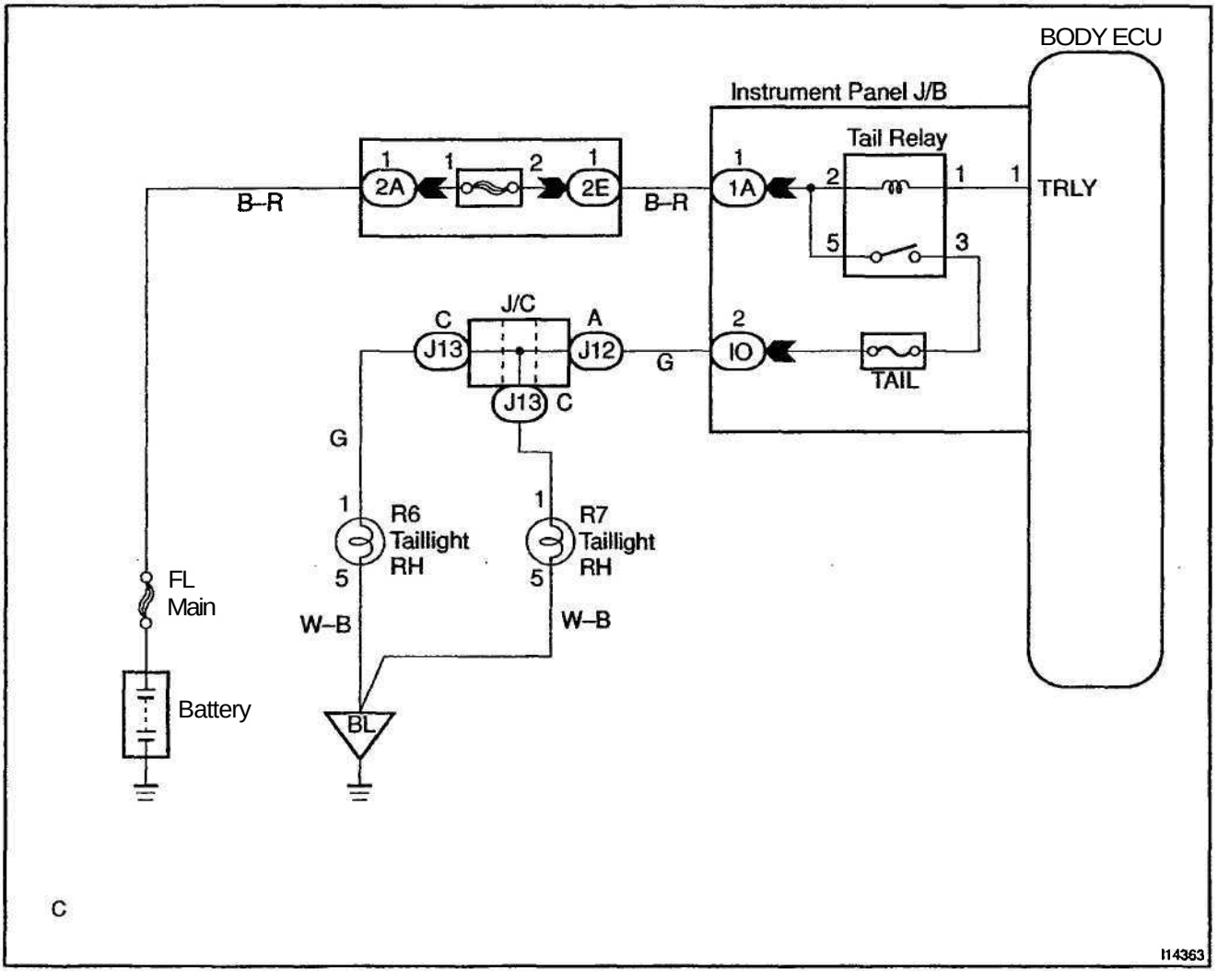

INSPECTION PROCEDURE

1	Check taillight relay (See page **BE–17).**

NG → Replace the taillight relay.

OK

2	**Check wireharness and connector between taillight relay and Body ECU, battery and taillight relay (See page IN–30).**

NG → **Repair or replace wireharness or connector.**

OK

Proceed to next circuit inspection shown on problem symptoms table (See page DI–542).

Headlight Relay Circuit

CIRCUIT DESCRIPTION

Head light relay wilt be "ON" by operating the headlight switch. The transistor which activates the headlight relay has two sorts: one activates directly by the headlight switch for fail safe and the other activates by CPU. the one that activates by CPU has two systems and prevents the headlight from turning off at the time of one system trouble in the automatic operation circuit.

WIRING DIAGRAM

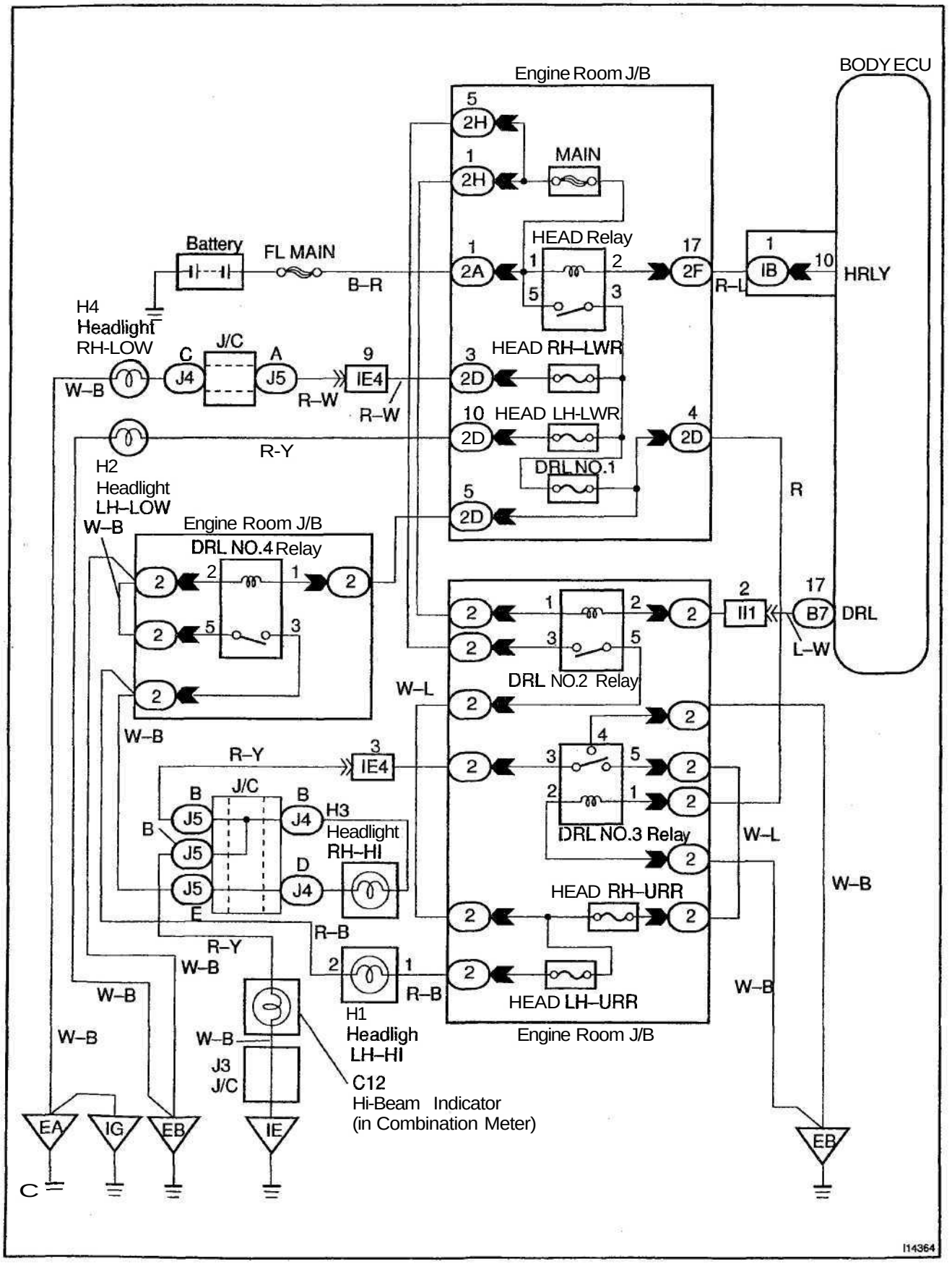

INSPECTION PROCEDURE

1	Check headlight relay (See page **BE–17).**

NG → Replace the headlight relay.

OK

2	Check wireharness and connector between headlight relay and Body ECU, battery and headlight relay (See page **IN–30).**

NG → **Repair or replace wireharness or connector.**

OK

Proceed to next circuit inspection shown on problem symptoms table (See page DI–542).

DI6QZ-01

Daytime Running Light No. 2 Relay Circuit

CIRCUIT DESCRIPTION

When the light control switch is set to OFF or TAIL after the following conditions are satisfied simultaneously with the ignition switch ON, the daytime running lights up by control of the body ECU.

- The parking brake switch is OFF.
- The generator is ON (Engine running)

WIRING DIAGRAM

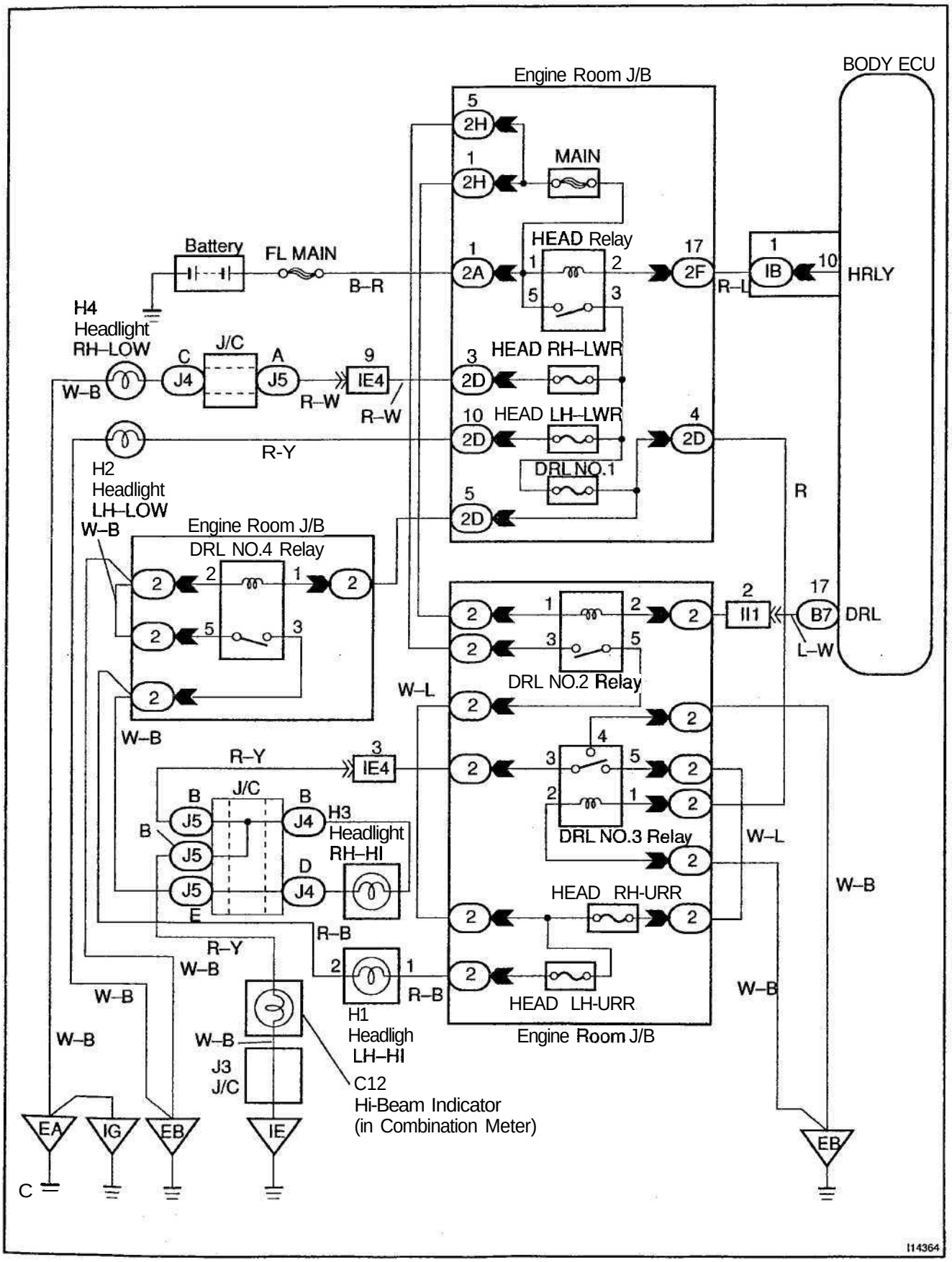

INSPECTION PROCEDURE

1	Check D.R.L. No. 2 relay (See page **BE–17).**

NG → Replace the D.R.L. No. 2 relay.

OK

2	**Check wireharness and connector between D.R.L. No. 2 relay and Body ECU, battery and D.R.L. No. 2 relay (See page IN–30).**

NG → **Repair or replace wireharness or connector.**

OK

Proceed to next circuit inspection shown on problem symptoms table (See page DI–542).

DI5VO-02

Light Control Switch Circuit

CIRCUIT DESCRIPTION

This circuit defects the state of the light control switch.

WIRING DIAGRAM

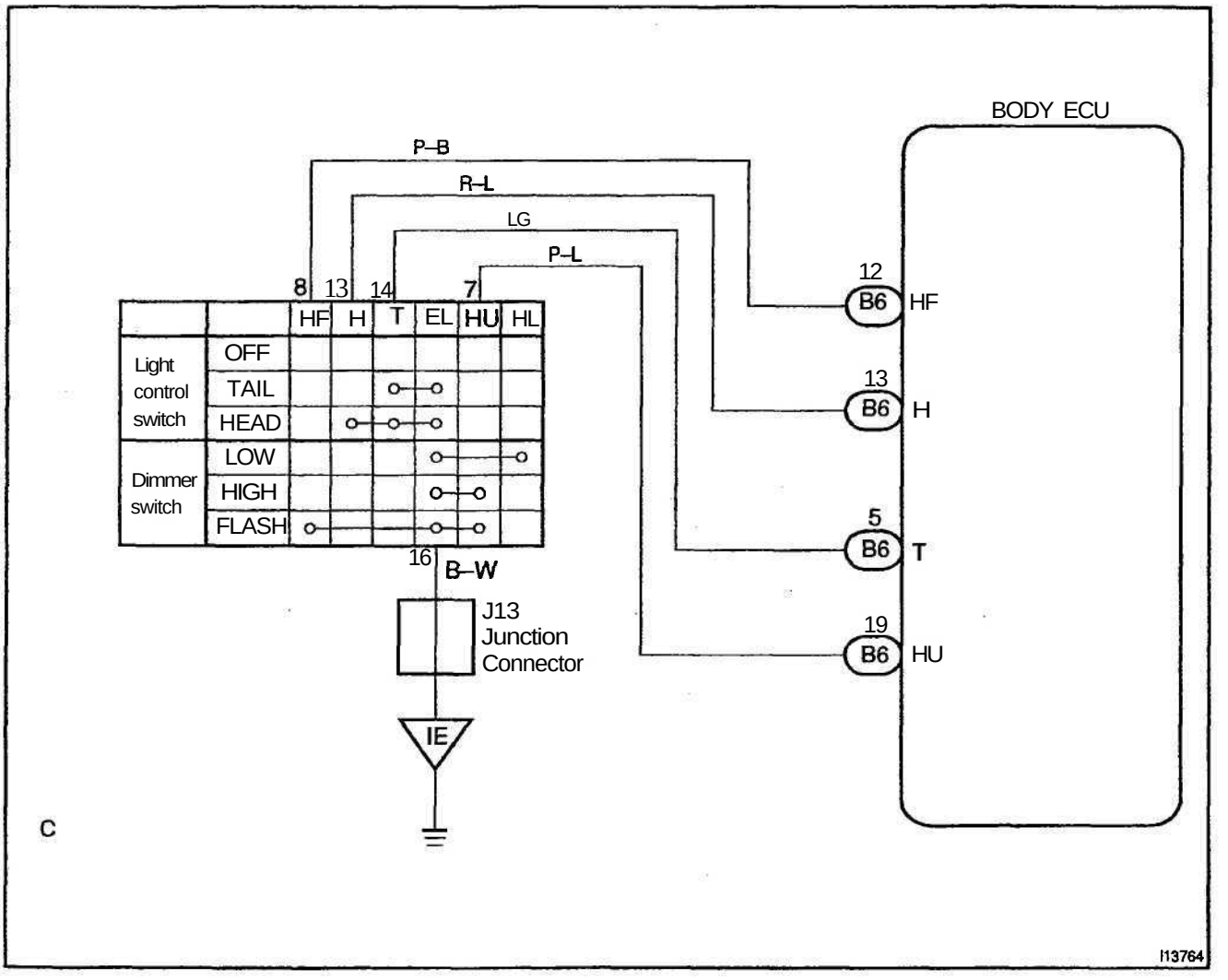

INSPECTION PROCEDURE

1	Check light control switch (See page **BE–17).**

NG → Replace the **headlight** control switch.

OK

2	**Check wireharness and connector between headlight control switch and Body ECU (See page IN–30).**

NG → **Repair or replace wireharness or connector.**

OK

Proceed to next circuit inspection shown on problem symptoms table (See page DI–542).

DISYO-03

Headlight Dimmer Switch Circuit

CIRCUIT DESCRIPTION

This circuit detects the state of the headlight dimmer switch.

WIRING DIAGRAM

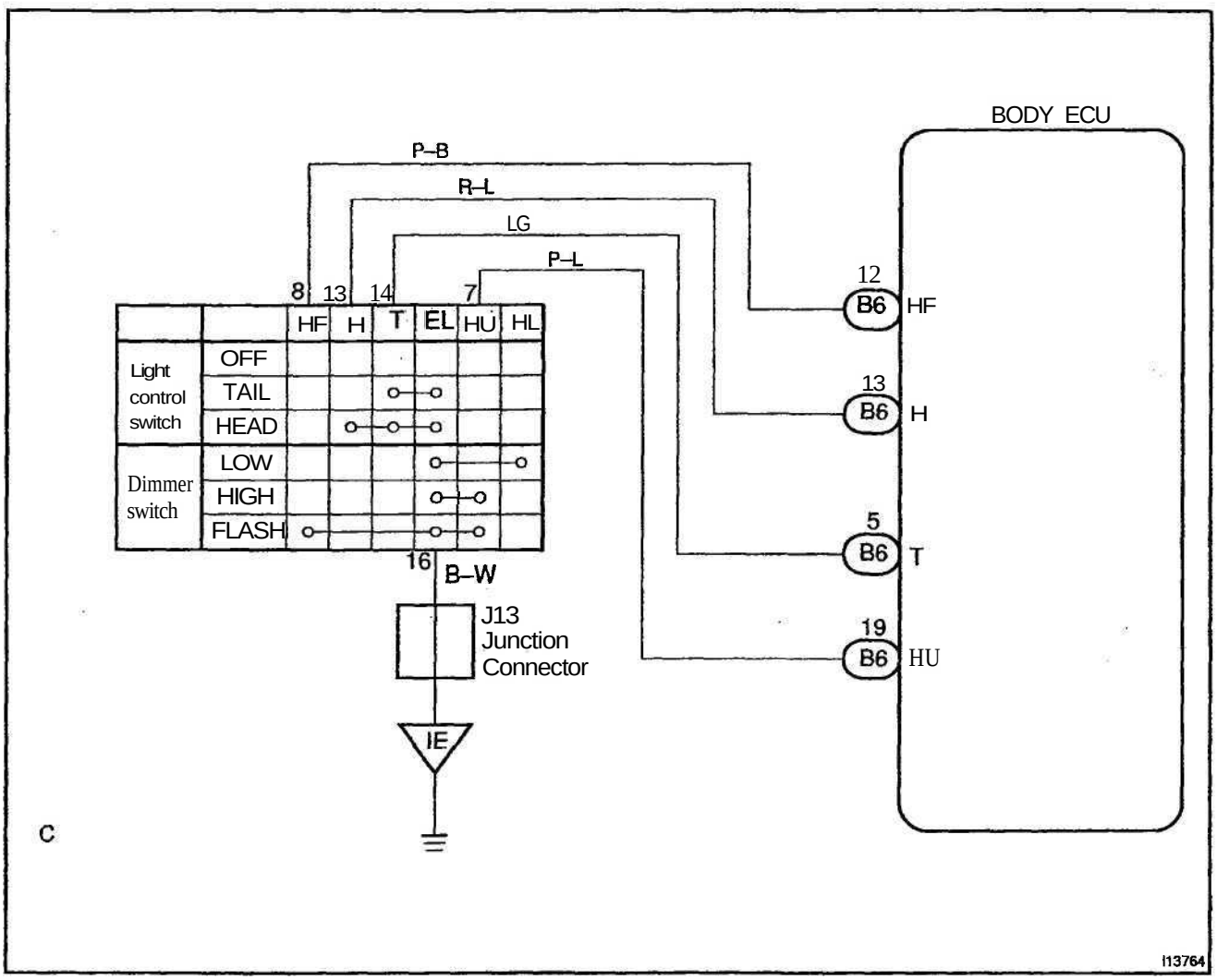

INSPECTION PROCEDURE

1	Check headlight dimmer switch (See page **BE–17).**

NG → Replace the headlight dimmer switch.

OK

2	**Check wireharness and connector between headlight dimmer switch and Body ECU (See page IN–30).**

NG → **Repair or replace wireharness or connector.**

OK

Proceed to next circuit inspection shown on problem symptoms table (See page DI–542).

Illumination Circuit

CIRCUIT DESCRIPTION

Receiving the courtesy signal from the Body ECU will make the interior light, ignition light, and courtesy light come on.

WIRING DIAGRAM

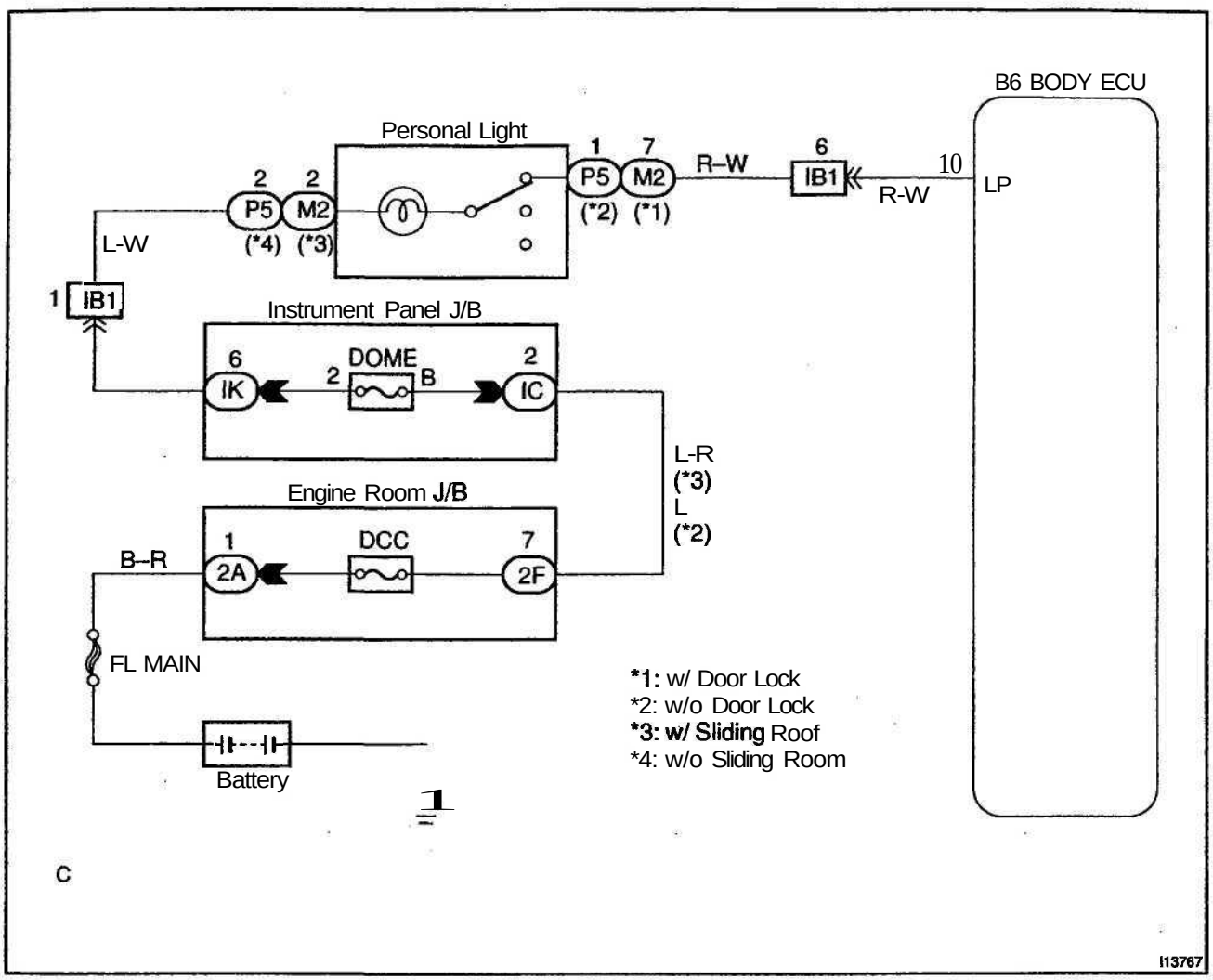

INSPECTION PROCEDURE

1	Check DOME fuse.

NG → Replace the **fuse.**

OK

2	**Check illumination light.**

NG → **Replace the failure light.**

OK

3	**Check wireharness and connector between each illumination light and Body ECU, battery and each illumination light (See page IN–30).**

NG → **Repair or replace wireharness or connector.**

OK

Proceed to next circuit inspection shown on problem symptoms table (See page DI–542).

INSPECTION PROCEDURE

1	Check key unlock warning switch (See page **BE–14).**

NG → Replace the key unlock warning switch.

OK

2	**Check wireharness and connector between key unlock warning switch and Body ECU (See page IN–30).**

NG → **Repair or replace wireharness or connector.**

OK

Proceed to next circuit inspection shown on problem symptoms table (See page DI–542).

DI6R1-01

Key Unlock Warning Switch Circuit

CIRCUIT DESCRIPTION

The key unlock warning switch goes on when the ignition key is inserted in the key cylinder and goes off when the ignition key is removed.
The ECU operates the key confinement prevention function while the key unlock warning switch is on.

WIRING DIAGRAM

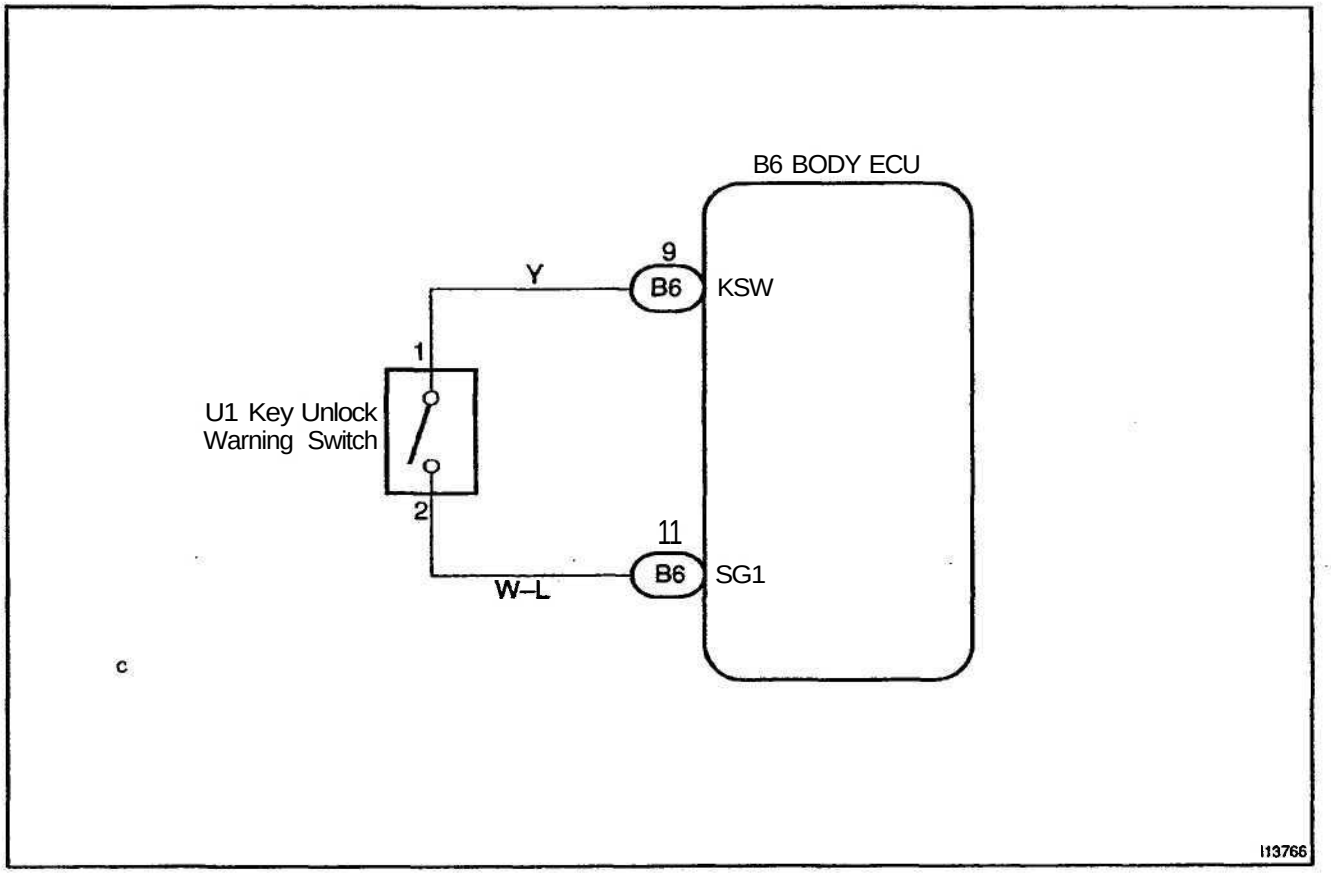

D6RR2-01

Driver Buckle Switch Circuit

CIRCUIT DESCRIPTION

When the buckle switch of the driver's seat is ON with the ignition switch ON, the body ECU sends a signal to make the seat belt warning light for the driver's seat light up and to sound a buzzer.
When the buckle switch of the passenger seat is ON and the passenger seat belt occupant detecting sensor is ON with the ignition switch ON, the body ECU sends a signal to make the seat belt warning light for the passenger seat light up.

WIRING DIAGRAM

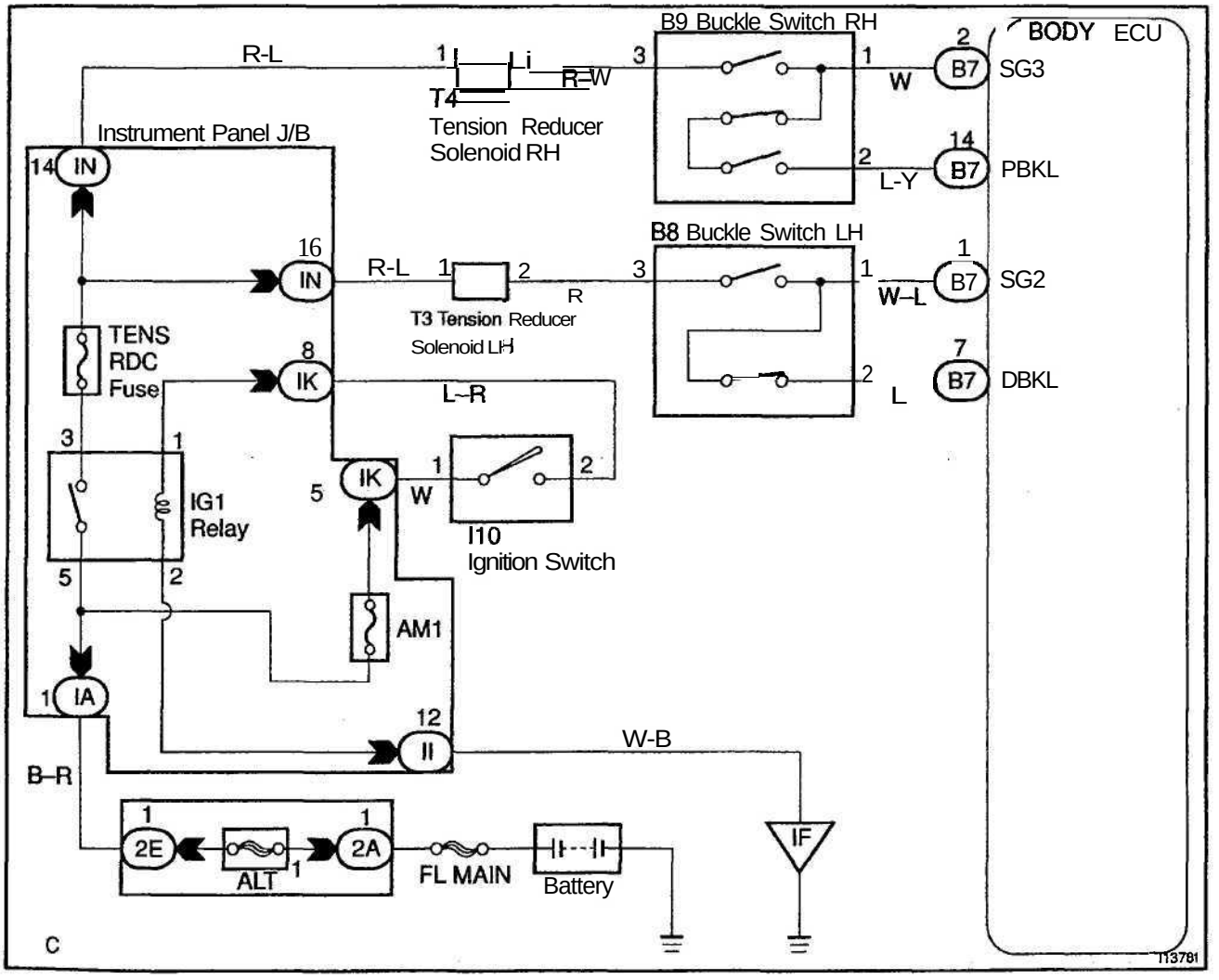

INSPECTION PROCEDURE

1	Check buckle switch (See page **BE–46).**

NG → Replace the buckle switch.

OK

2	Check wire harness and connector between buckle switch and body ground (See page **IN–30).**

NG → Repair or replace wire harness or connector.

OK

Proceed to next circuit inspectionshown on problem symptoms table (See page DI–542).

D2A3-05

Horn Circuit

CIRCUIT DESCRIPTION

The horn is connected to the body ECU and activated by the body ECU.

WIRING DIAGRAM

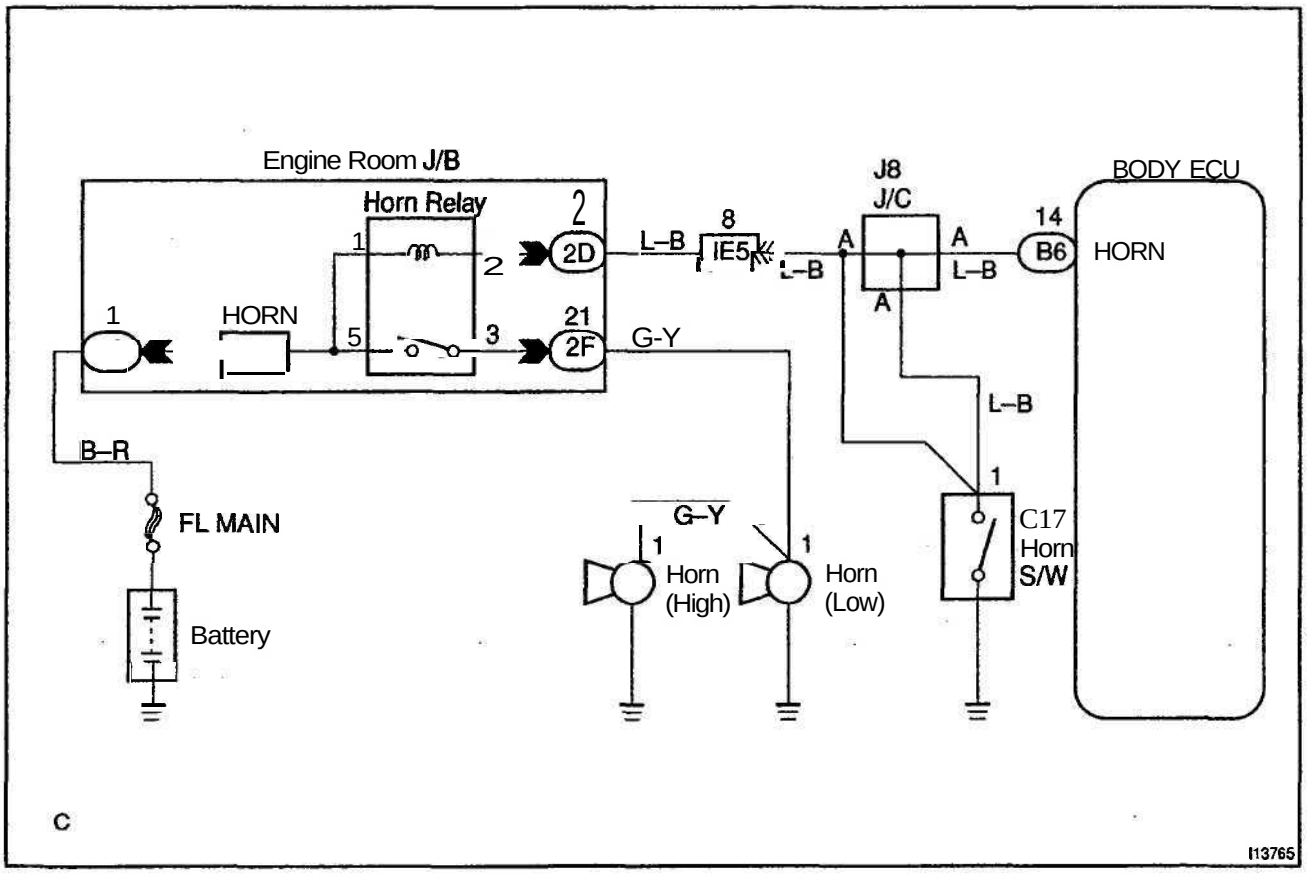

INSPECTION PROCEDURE

1	Check horn (See page **BE–126).**

NG → Replace the horn.

OK

2	**Check wireharness and connector between horn relay and body ECU, battery and horn relay (See page IN–30).**

NG → **Repair or replace wireharness or connector.**

OK

Proceed to next circuit inspection shown on problem symptoms table (See page DI–542).

DISW4-02

PWS Circuit

CIRCUIT DESCRIPTION

When the ignition switch is ON, or during the time from when the ignition switch is turned OFF till 43 sec. has elapsed or till the closed door is opened, the body ECU permits the operation of the power window and sliding roof.

WIRING DIAGRAM

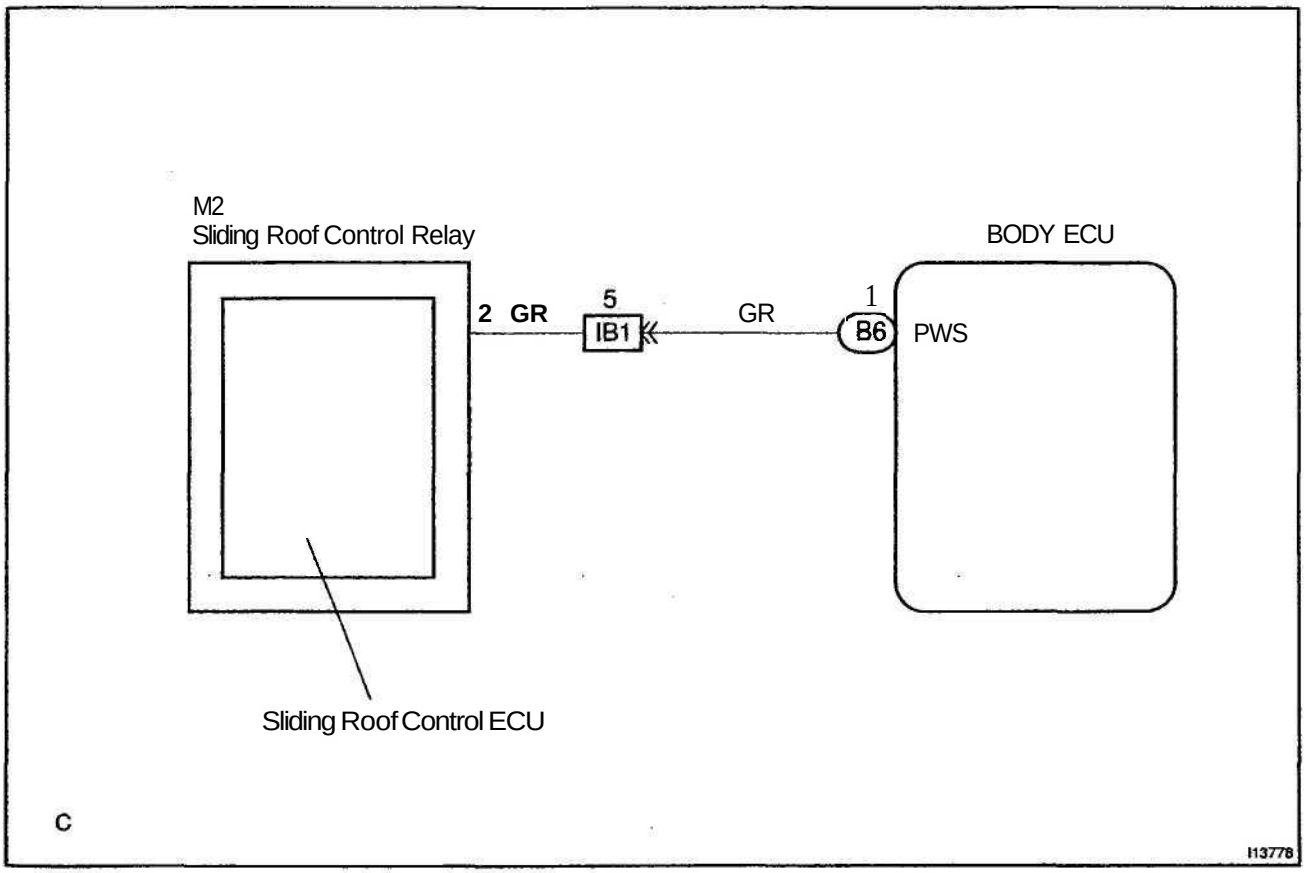

INSPECTION PROCEDURE

1	Check wireharness and connector between sliding roof control assembly and Body ECU (See page IN–30).

NG → Repair or replace wireharness or connector.

OK →

Proceed to next circuit inspection shown on problem symptoms table (See page DI–542).

Power Window Master Switch Circuit

CIRCUIT DESCRIPTION

This circuit detects the state of the power window master switch.

WIRING DIAGRAM

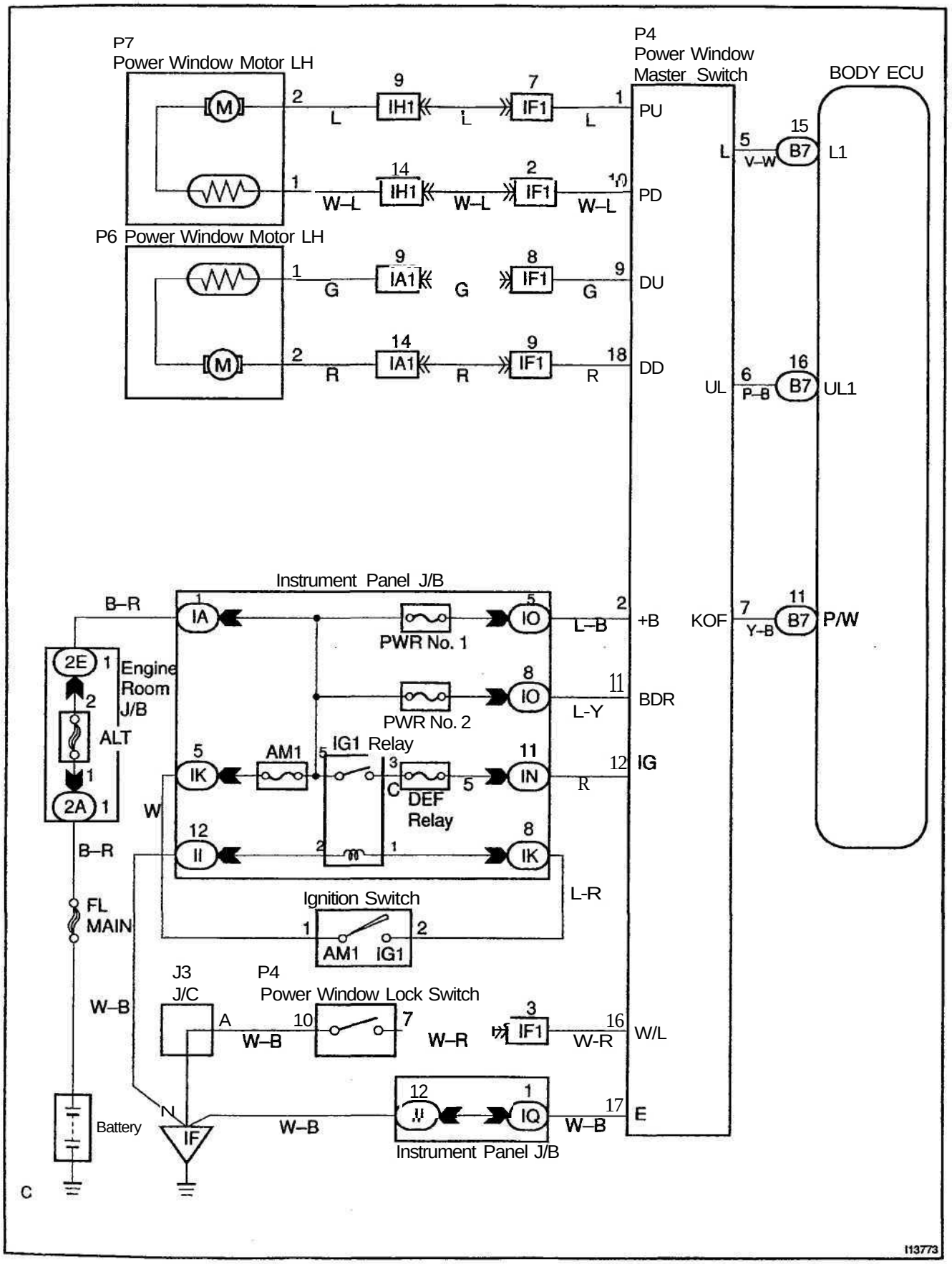

INSPECTION PROCEDURE

1	Check the power window master switch (See page BE-59).

NG → Replace the power window master switch.

OK

2	**Check wireharness and connector between power window master switch and body ECU (See page IN–30).**

NG → **Repair or replace wireharness or connector.**

OK

Proceed to next circuit inspection shown on problem symptoms table (See page DI–542).

DI6R4-01

Door Lock Motor Circuit

CIRCUIT DESCRIPTION

When the door switch is set to LOCK, the body ECU outputs a signal to lock all of the doors.

WIRING DIAGRAM

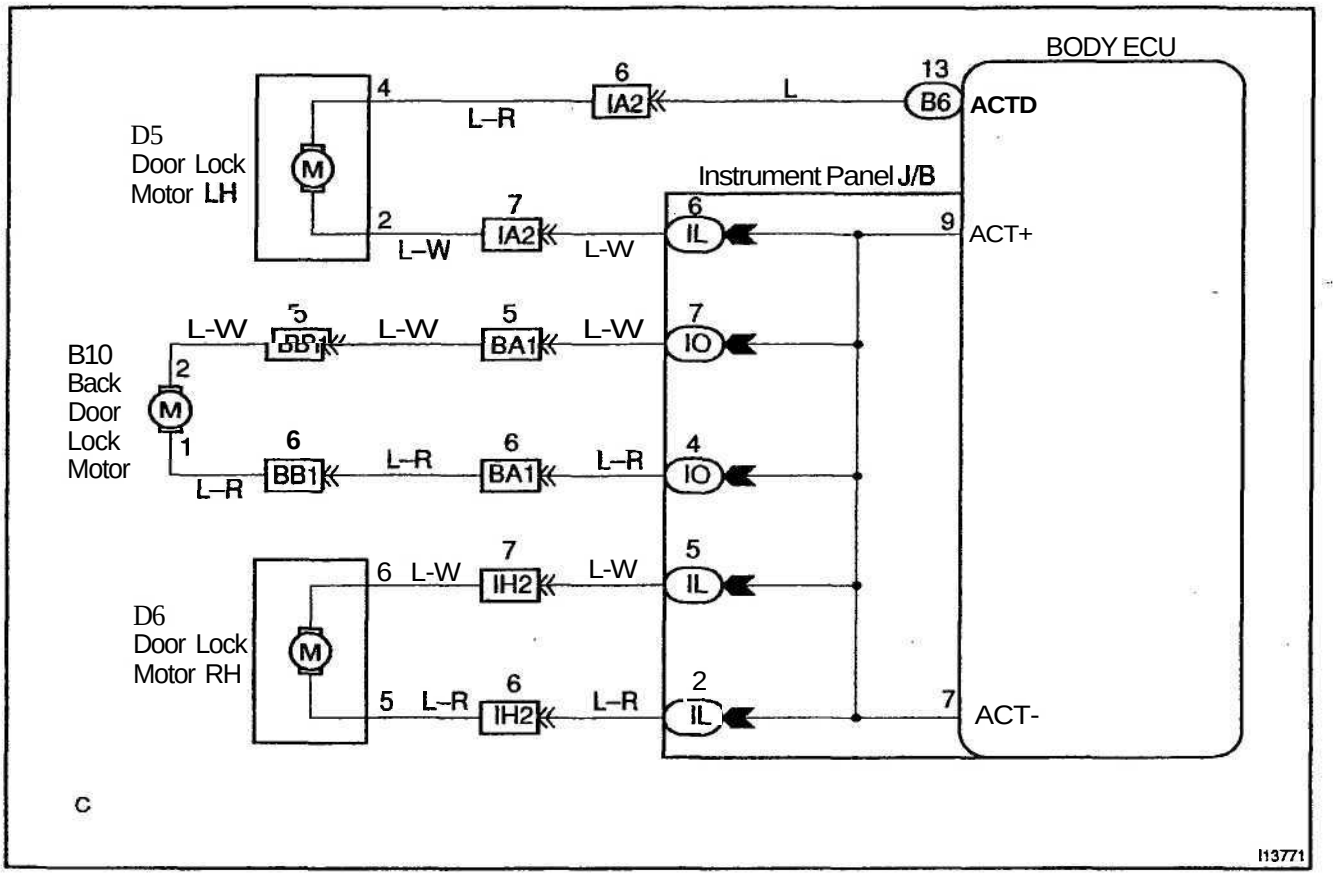

INSPECTION PROCEDURE

1	Check door lock motor (See page **BE–63).**

NG → Replace the door lock motor.

OK

2	**Check wireharness and connector between door lock motor and body ECU (See page IN–30).**

NG → **Repair or replace wireharness or connector.**

OK

Proceed to next circuit inspection shown on problem symptoms table (See page DI–542).

D16R5-01

Door Unlock Detection Switch Circuit

CIRCUIT DESCRIPTION

The door unlock detection switch is built in the door lock motor assembly. This switch is ON when the door lock knob is in the unlock position and OFF when the lock knob is in the lock position. The ECU detects the door lock knob conditions is this circuit. It is used as one of the operating conditions for the key confinement prevention function.

WIRING DIAGRAM

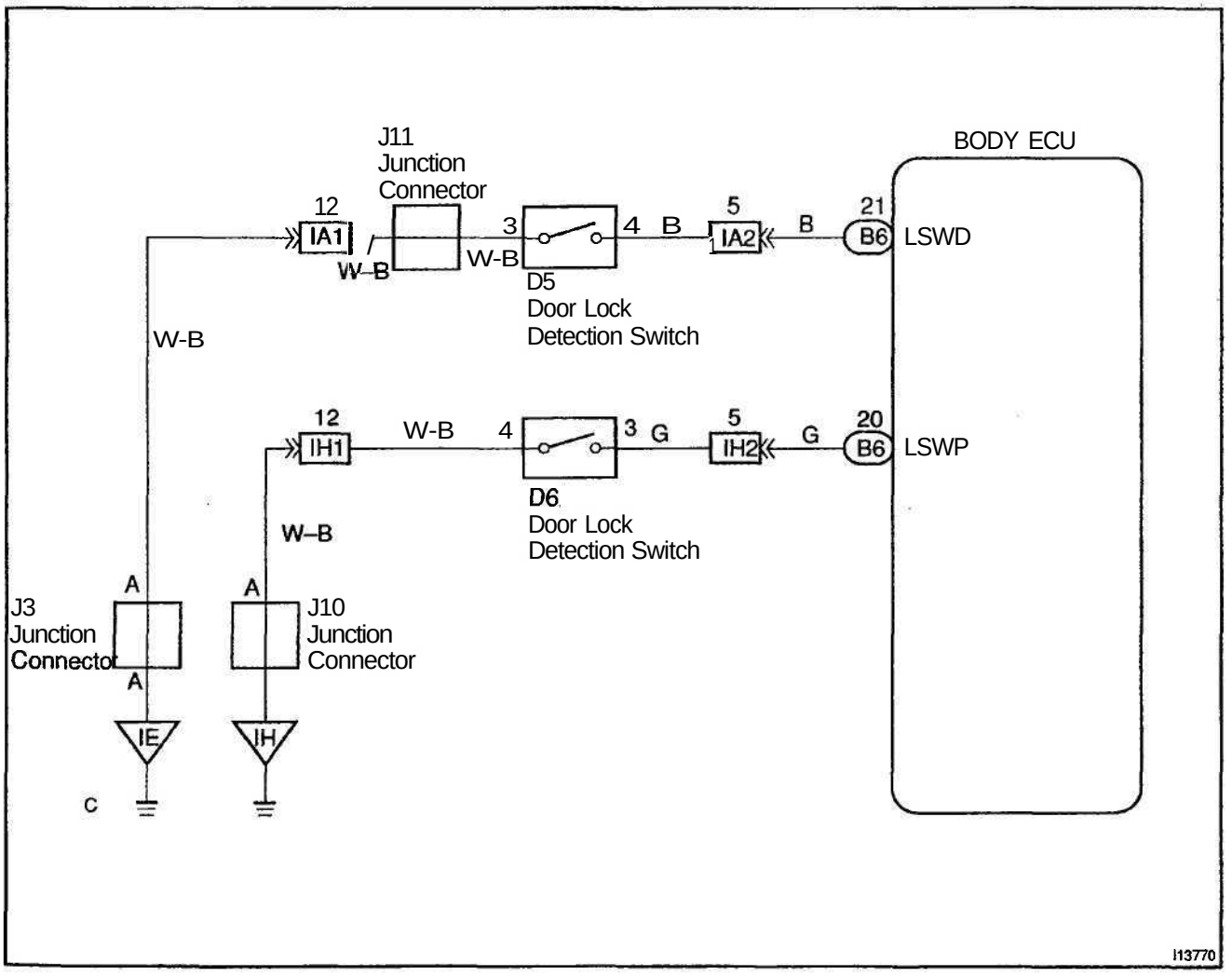

INSPECTION PROCEDURE

1	Check door unlock detection switch (See page **BE–63).**

NG → Replace the **door** unlock detection switch.

OK

2	**Check wireharness and connector between door unlock detection switch and body ECU (See page IN–30).**

NG → **Repair or replace wireharness or connector.**

OK

Proceed to next circuit inspection shown on problem symptoms table (See page DI–542).

D6R6-01

Door Key Lock and Unlock Switch Circuit

CIRCUIT DESCRIPTION

The door key lock and unlock switch is built in the door key cylinder. When the key is turned to the lock side, terminal 3 of the switch is grounded and when the key is turned to the unlock side, terminal 2 of the switch is grounded.

WIRING DIAGRAM

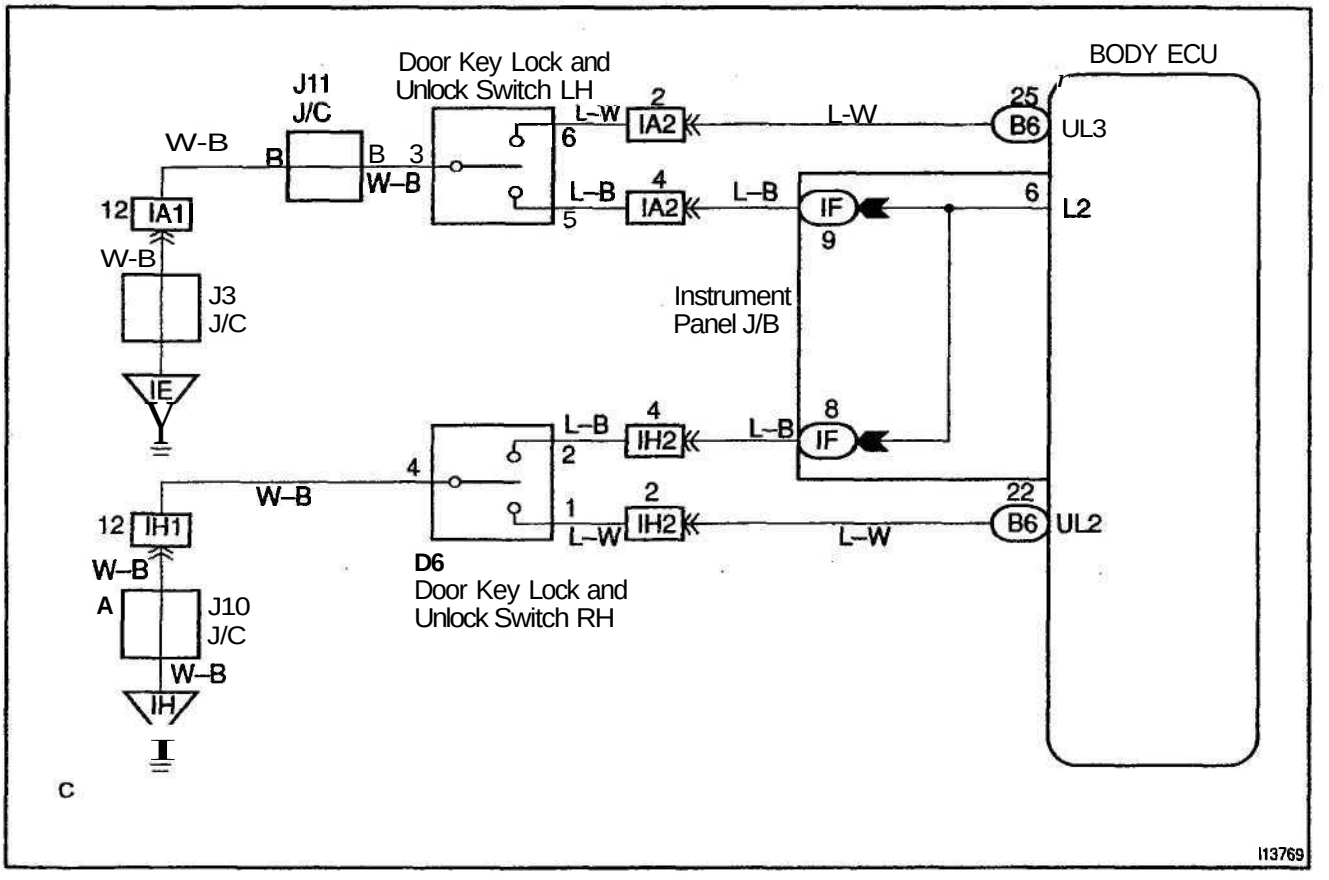

INSPECTION PROCEDURE

1	Check the door key lock and unlock switch (See page **BE–63).**

NG → Replace the door key lock and unlock switch.

NG

2	**Check wireharness and connector between door key lock and unlock switch and body ECU (See page IN–30).**

NG → **Repair or replace wireharness or connector.**

OK

Proceed to next circuit inspection shown on problem symptoms table (See page DI–542).

DI6R7-01

Door Courtesy Switch Circuit

CIRCUIT DESCRIPTION

The door courtesy switch goes on when the door is opened and goes off when door is closed.

WIRING DIAGRAM

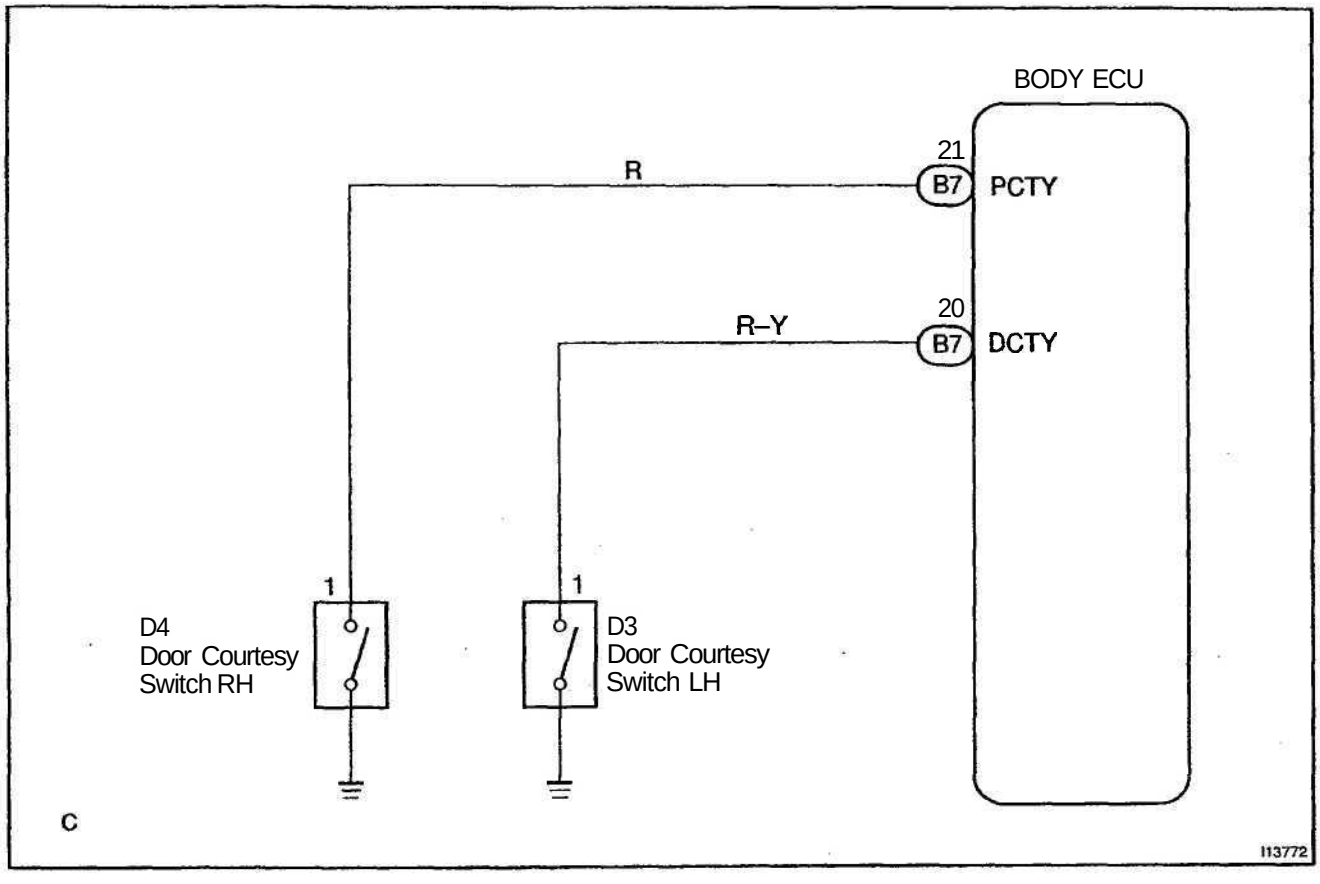

INSPECTION PROCEDURE

1	Check courtesy switch (See page **BE-28**).

NG → Replace the courtesy switch.

OK

2	**Check that there is a grounding malfunction caused by looseness of the tighten screw.**

NG → **Install screw.**

OK

3	**Check wireharness and connector between courtesy light and body ECU, courtesy switch and body ECU (See page IN-30).**

NG → **Repair or replace wireharness or connector.**

OK

Proceed to next circuit inspection shown on problem symptoms table (See page DI-542).

Luggage Courtesy Switch Circuit

CIRCUIT DESCRIPTION

The luggage courtesy switch goes on when luggage compartment door is opened and goes off when luggage compartment door is closed.

WIRING DIAGRAM

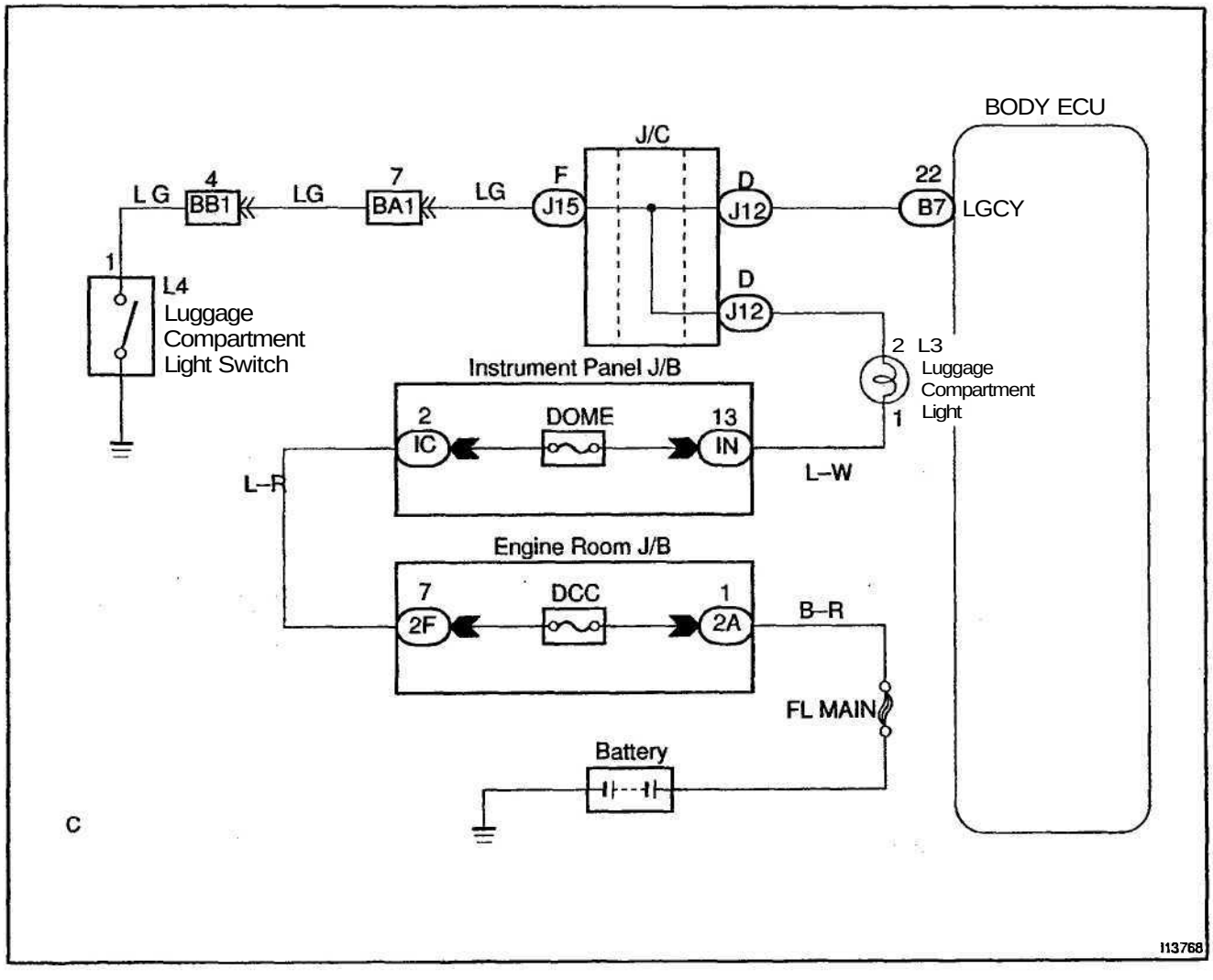

INSPECTION PROCEDURE

1	Check luggage courtesy switch (See page **BE–28**).

NG → Replace the luggage courtesy switch.

OK

2	**Check wire harness and connector between luggage courtesy switch and Body ECU (See page IN–30).**

NG → **Repair or replace wire harness or connector.**

OK

Proceed to next circuit inspection shown on problem symptoms table (See page DI–542).

DI6R9-01

Wireless Door Lock Tuner Circuit

CIRCUIT DESCRIPTION

The signal from the transmitter will be input to the body ECU through RDA line. RDA line is diagnosed by the Body ECU, so check DTC also in case of the failure of the wireless function.

WIRING DIAGRAM

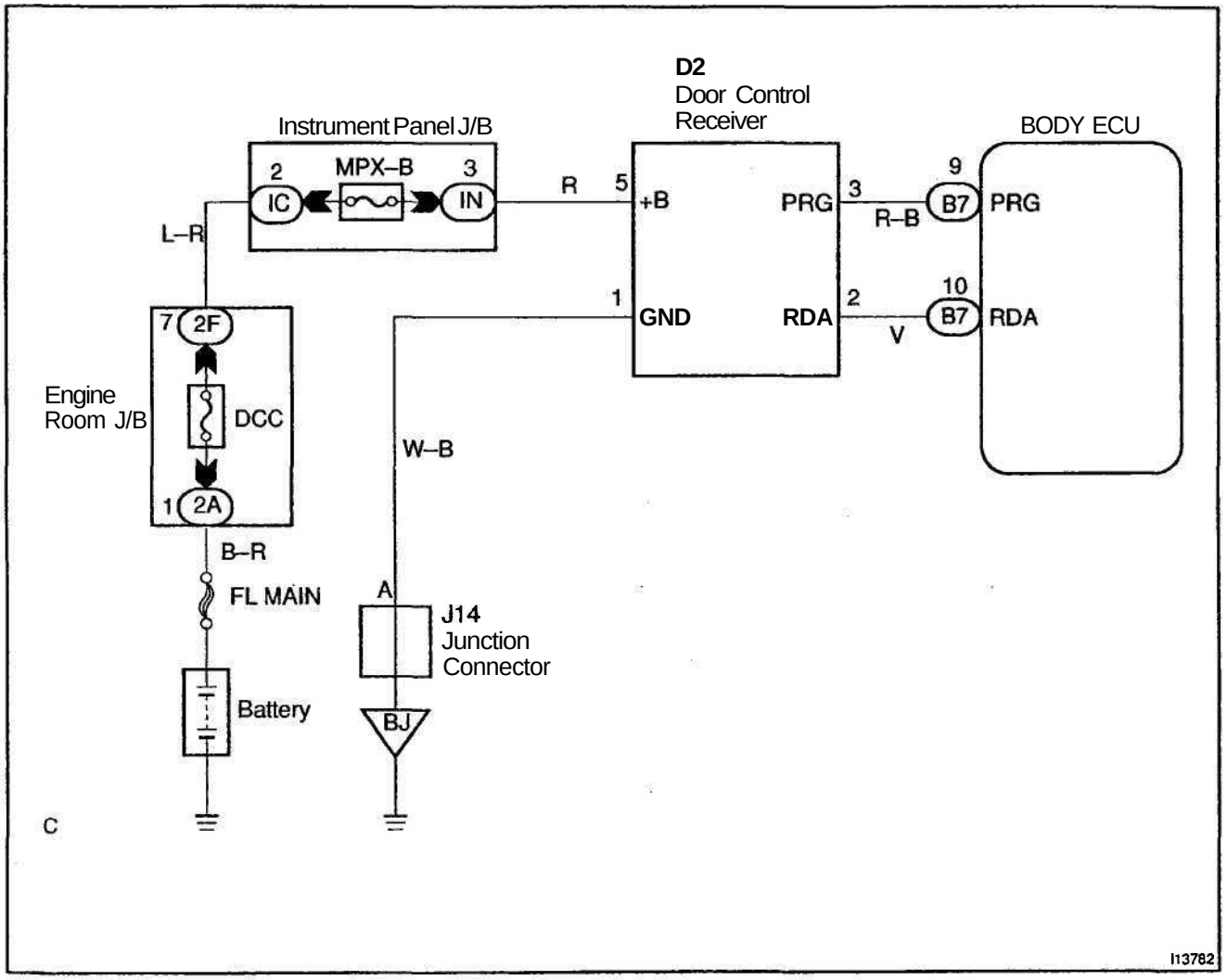

INSPECTION PROCEDURE

1	Check that DTC 42 is not output.

NG → Check the RDA line.

OK

2	**Check wireharness.**

PREPARATION:
Disconnect connectors of wireless door lock tuner and Body ECU.
CHECK:
Check continuity between terminals PRG of wireless door lock tuner and PRG of Body ECU.
OK:
Continuity

NG → **Repair or replace wireharness.**

OK

3	**Check the wireless door lock tuner.**

CHECK:
Replace the wireless door lock tuner and check if it recovers normally.
OK:
Must be recovered normally.

NG → **Proceed to next circuit inspection shown on problem symptoms table (See page DI–542).**

OK

Failure of the original wireless door lock tuner.

Rear Defogger Relay Circuit

WIRING DIAGRAM

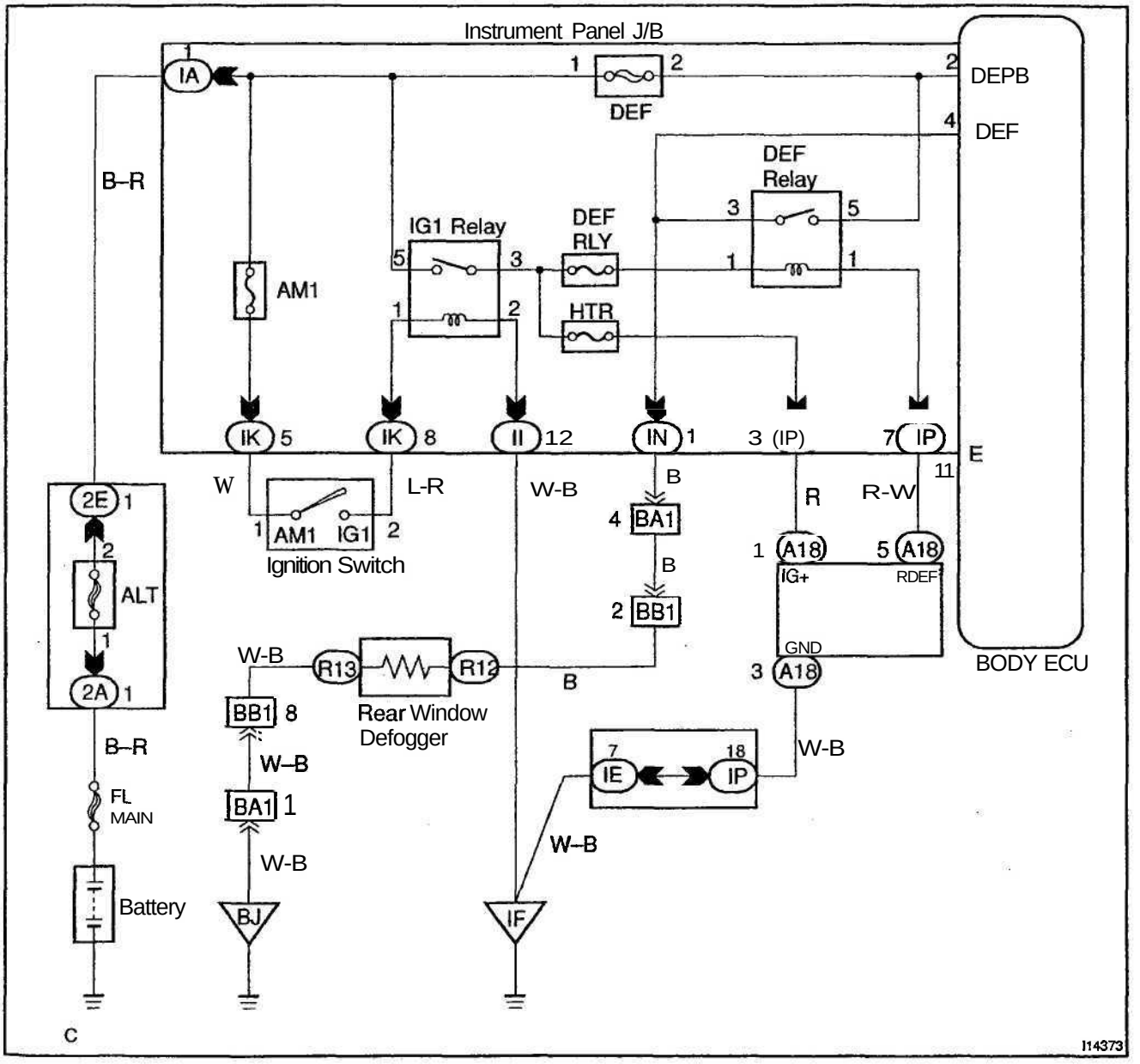

INSPECTION PROCEDURE

1	Check rear defogger relay (See page BE-55).

NG → Replace the rear defogger relay.

OK →

2	Check wireharness and connector between rear defogger relay and body ECU, front defogger relay and body ECU (See page **IN–30).**

NG → Repair or replace wireharness or connector.

OK →

Proceed to next circuit inspection shown on problem symptoms table (See page **DI–542).**

Fuel Sender Gauge Circuit

CIRCUIT DESCRIPTION

This circuit detects sensor signals from the fuel sender gauge.

WIRING DIAGRAM

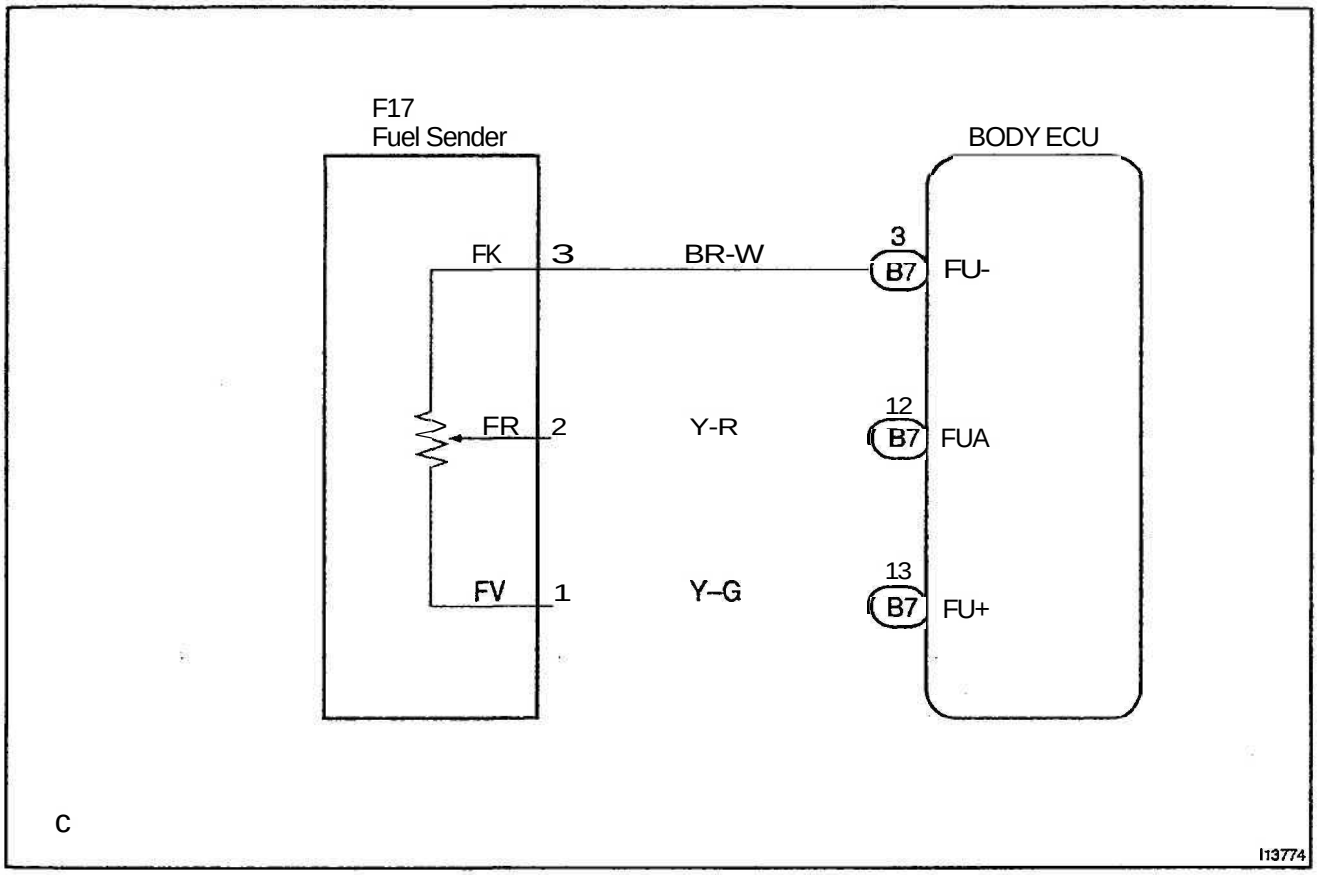

INSPECTION PROCEDURE

1	Check fuel sender gauge (See page **BE–46).**

NG → Replace the fuel sender gauge.

OK

2	**Check wireharness and connector between fuel sender gauge and Body ECU (See page IN–30).**

NG → **Repair or replace wireharness or connector.**

OK

Proceed to next circuit inspection shown on problem symptoms table (See page DI–542).

D12AJ-05

Brake Fluid Level Warning Switch Circuit

CIRCUIT DESCRIPTION

To detect abnormality of the brake fluid level.

WIRING DIAGRAM

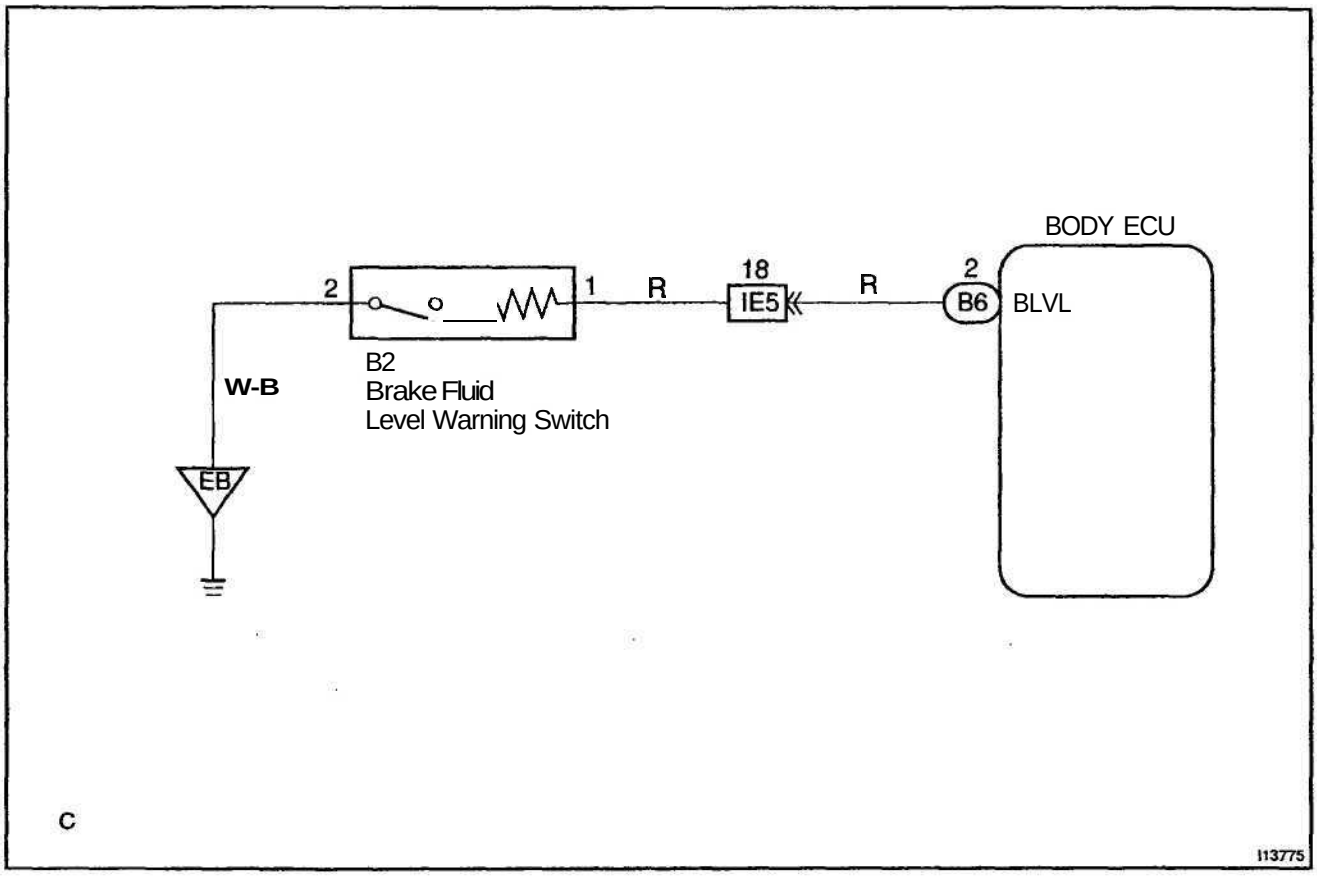

INSPECTION PROCEDURE

1	Check brake fluid level warning switch (See page **BE–46**).

NG → Replace the brake fluid level warning switch.

OK

2	**Check wireharness and connector between brake fluid level warning switch and body ECU (See page IN–30).**

NG → **Repair or replace wireharness or connector.**

OK

Proceed to next circuit inspection shown on problem symptoms table (See page DI–542).

DI5W2-02

Parking Brake Switch Circuit

CIRCUIT DESCRIPTION

This circuit detects the state of the parking brake switch.

WIRING DIAGRAM

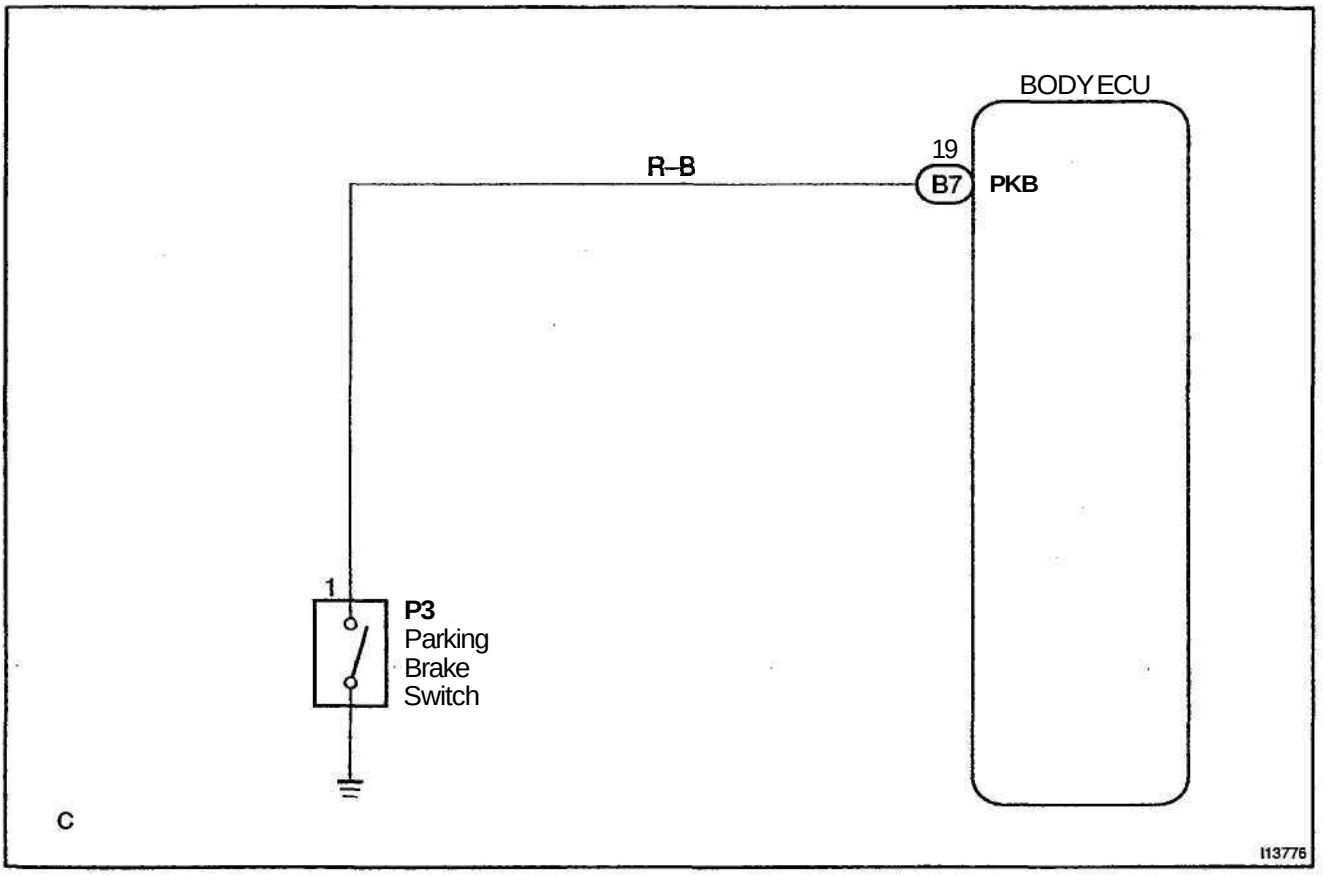

INSPECTION PROCEDURE

1	Check parking brake switch (See page **BE–46**).

NG → Replace the parking brake switch.

OK

2	**Check wireharness and connector between parking brake switch and Body ECU (See page IN–30).**

NG → **Repair or replace wireharness or connector.**

OK

Proceed to next circuit inspection shown on problem symptoms table (See page DI–542).

D12SZ-04

O/D Main Switch Circuit

CIRCUIT DESCRIPTION

Body ECU detect the state O/D main switch.

WIRING DIAGRAM

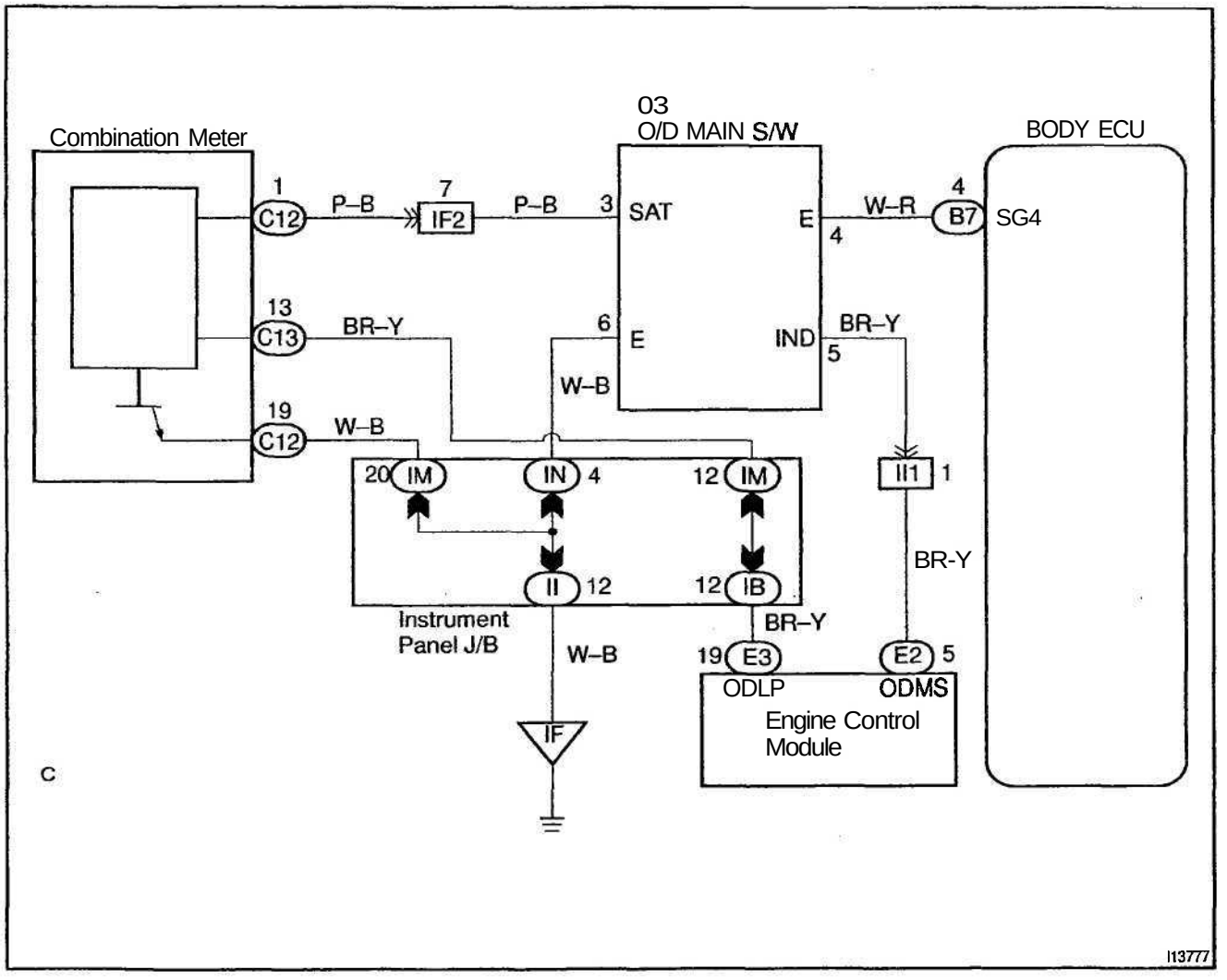

INSPECTION PROCEDURE

1	Check O/D main switch (See page **DI–206, DI–268).**

NG → Replace the O/D main switch.

OK

2	**Check wireharness and connector between O/D main switch and body ECU (See page IN–30).**

NG → **Repair or replace wireharness or connector.**

OK

Proceed to next circuit inspection shown on problem symptoms table (See page DI–542).

DI1T3-04

Airbag Sensor Assembly Communication Circuit

CIRCUIT DESCRIPTION

Signals received at the body ECU, such as the passenger seat occupant detection sensor signal, is transmitted to the airbag sensor assembly.

WIRING DIAGRAM

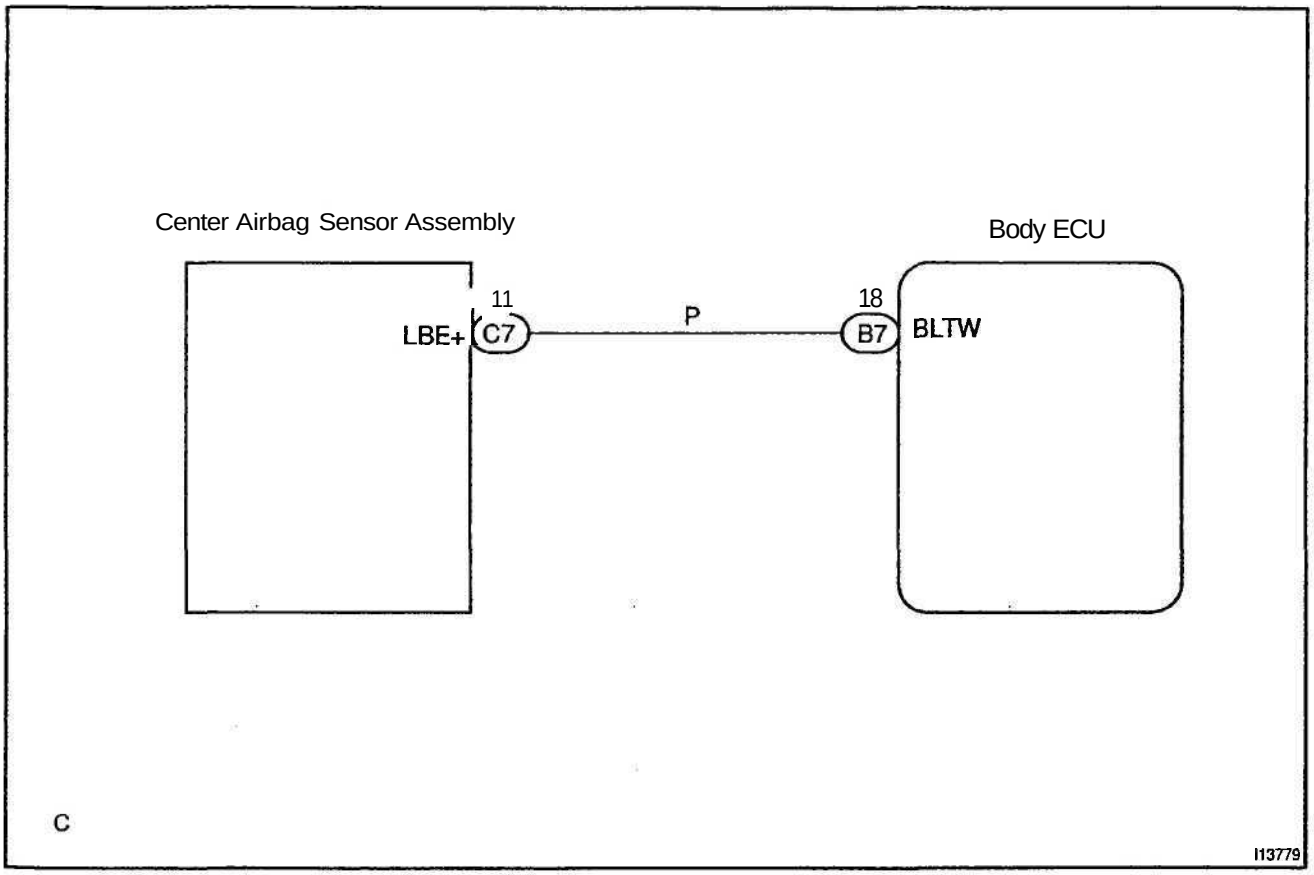

INSPECTION PROCEDURE

1	Check for open and short in wireharness and connector between body ECU and airbag sensor assembly (See page IN–30).

NG → Repair or replace wireharness and connector.

OK

2	Check the airbag sensor assembly (See page DI–324).

NG → Replace the airbag sensor assembly.

OK

Replace the body ECU.

Light Sensor Circuit

CIRCUIT DESCRIPTION

Signals output from the light control sensor are detected.

WIRING DIAGRAM

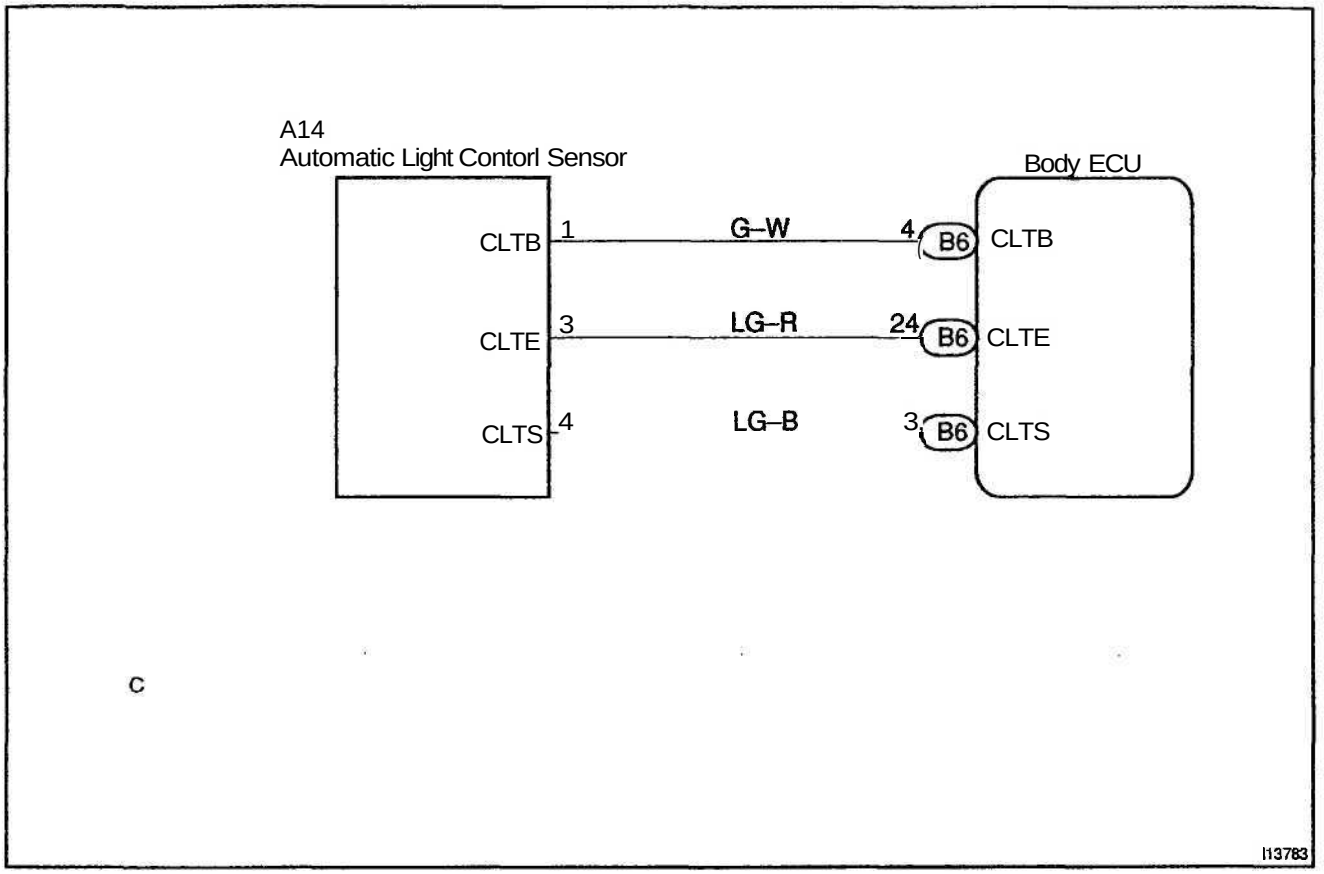

INSPECTION PROCEDURE

1	Check light sensor (See page **BE–17).**

NG → Replace the light sensor.

OK

2	**Check wireharness and connector between light sensor and body ECU (See page IN–30).**

NG → **Repair or replace wireharness or connector.**

OK

Replace the body ECU.

D6RC-01

Multiplex Communication Circuit

CIRCUIT DESCRIPTION

Signals are transmitted between the ECM and combination meter through the communication circuit.

WIRING DIAGRAM

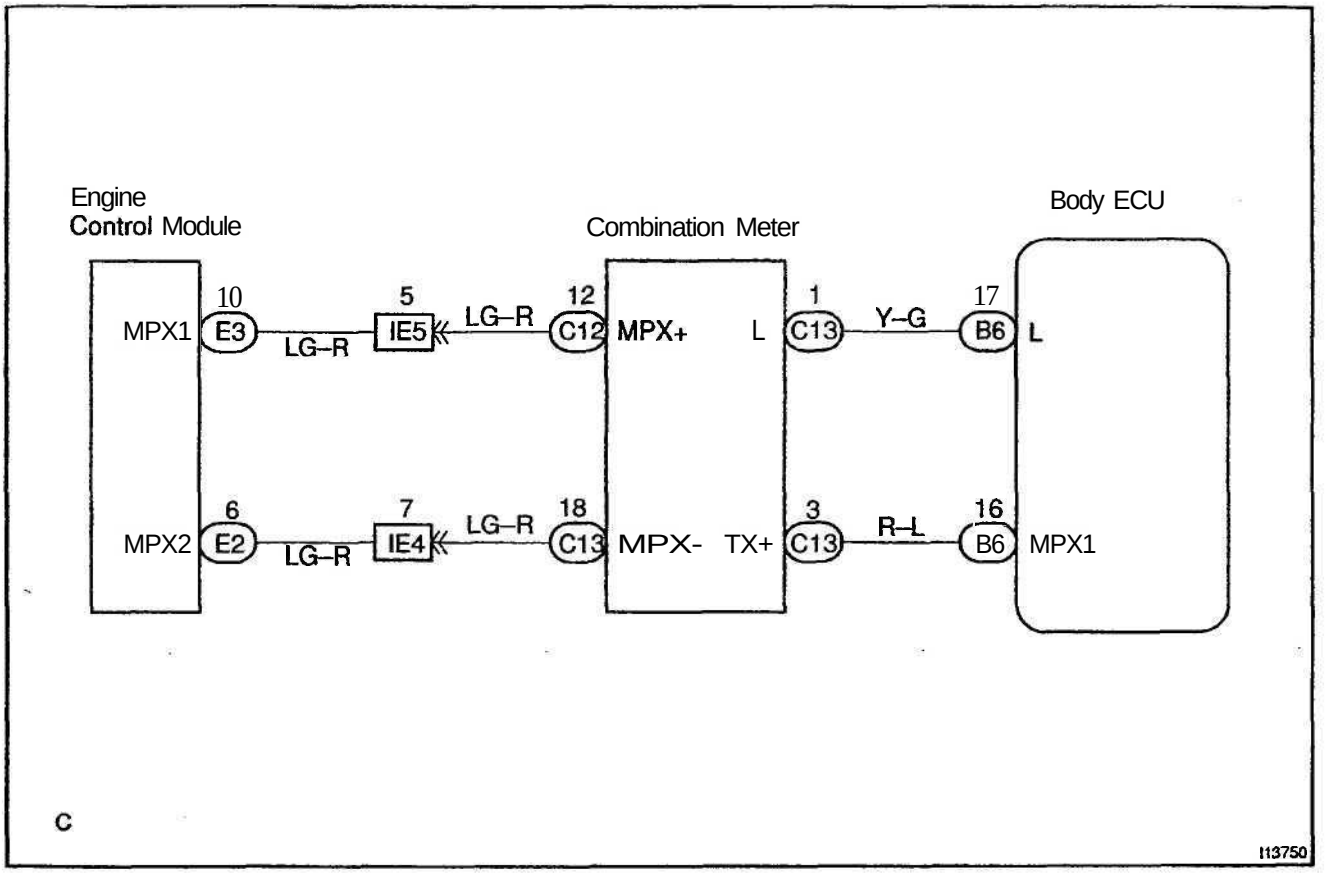

INSPECTION PROCEDURE

1	Check ECM (See page **DI–1**).

NG → Replace the ECM.

OK

2	Check combination meter (See page **BE–46**).

NG → Replace the combination meter.

OK

3	**Check wireharness and connector between combination meter and body ECU, ECM and combination meter (See page IN–30).**

NG → **Repair or replace wireharness or connector.**

OK

Replace the body ECU.

– MEMO-

ALPHABETICAL INDEX

A

Page Vol.

ABBREVIATIONS USED IN THIS MANUAL (TERMS) . . . IN–35 (1)
ABS ACTUATOR . . . BR–48 (2)
AIR CONDITIONING (PREPARATION) . . . PP–85 (1)
AIR CONDITIONING (SERVICE SPECIFICATIONS) . . . SS–57 (1)
AIR CONDITIONING AMPLIFIER . . . AC–60 (2)
AIR CONDITIONING SYSTEM . . . AC–1 (2)
AIR CONDITIONING UNIT . . . AC–24 (2)
AIR REFINER FILTER . . . AC–73 (2)
AIRBAG SENSOR ASSEMBLY . . . RS–52 (2)
ANTENNA . . . BE–119 (2)
ANTI-LOCK BRAKE SYSTEM WITH ELECTRONIC BRAKE FORCE DISTRIBUTION (EBD) (DIAGNOSTICS) . . . DI–274 (1)
ATF TEMPERATURE SENSOR (U240E) . . . AX–6 (2)
ATF TEMPERATURE SENSOR (U341E) . . . AX–5 (2)
AUDIO SYSTEM . . . BE–88 (2)
AUTOMATIC TRANSAXLE (U240E) (DIAGNOSTICS) . . . DI–155 (1)
AUTOMATIC TRANSAXLE (U240E) (PREPARATION) . . . PP–46 (1)
AUTOMATIC TRANSAXLE (U240E) (SERVICE SPECIFICATIONS) . . . SS–41 (1)
AUTOMATIC TRANSAXLE (U341E) (DIAGNOSTICS) . . . DI–218 (1)
AUTOMATIC TRANSAXLE (U341E) (PREPARATION) . . . PP–51 (1)
AUTOMATIC TRANSAXLE (U341E) (SERVICE SPECIFICATIONS) . . . SS–43 (1)
AUTOMATIC TRANSAXLE SYSTEM (U240E) . . . AX–1 (2)
AUTOMATIC TRANSAXLE SYSTEM (U341E) . . . AX–1 (2)
AUTOMATIC TRANSAXLE UNIT (U240E) . . . AX–30 (2)
AUTOMATIC TRANSAXLE UNIT (U341E) . . . AX–30 (2)

B

BACK DOOR . . . BO–22 (2)
BACK DOOR GLASS . . . BO–64 (2)
BACK DOOR STAY . . . BO–27 (2)
BACK-UP LIGHT SYSTEM . . . BE-30 (2)
BLOWER MOTOR . . . AC–48 (2)
BLOWER RESISTOR . . . AC–49 (2)
BLOWER UNIT . . . AC–30 (2)
BODY (PREPARATION) . . . PP–80 (1)
BODY (SERVICE SPECIFICATIONS) . . . SS–55 (1)
BODY CONTROL SYSTEM (DIAGNOSTICS) . . . DI–535 (1)
BODY ELECTRICAL (PREPARATION) . . . PP–77 (1)
BODY ELECTRICAL (SERVICE SPECIFICATIONS) . . . SS–54 (1)
BODY ELECTRICAL SYSTEM . . . BE–1 (2)
BRAKE . . . MA–6 (1)
BRAKE (PREPARATION) . . . PP–62 (1)
BRAKE (SERVICE SPECIFICATIONS) . . . SS–49 (1)
BRAKE BOOSTER ASSEMBLY . . . BR–13 (2)
BRAKE FLUID . . . BR–4 (2)
BRAKE MASTER CYLINDER . . . BR–9 (2)
BRAKE PEDAL . . . BR–6 (2)
BRAKE SYSTEM . . . BR–1 (2)

ID

C

CAMSHAFT POSITION SENSOR . . . IG–8 (2)
CAMSHAFT TIMING OIL CONTROL VALVE . . . SF–46 (2)
CHARGING (PREPARATION) . . . PP–24 (1)
CHARGING (SERVICE SPECIFICATIONS) . . . SS–27 (1)

Page Vol.

CHARGING SYSTEM . . . CH–1 (2)
CHASSIS . . . MA–7 (1)
CIRCUIT INSPECTION (ANTI-LOCK BRAKE SYSTEM WITH ELECTRONIC BRAKE FORCE DISTRIBUTION (EBD)) (DIAGNOSTICS) . . . DI–285 (1)
CIRCUIT INSPECTION (AUTOMATIC TRANSAXLE (U240E)) (DIAGNOSTICS) . . . DI–175 (1)
CIRCUIT INSPECTION (AUTOMATIC TRANSAXLE (U341E)) (DIAGNOSTICS) . . . DI–238 (1)
CIRCUIT INSPECTION (BODY CONTROL SYSTEM) (DIAGNOSTICS) . . . DI–544 (1)
CIRCUIT INSPECTION (CRUISE CONTROL SYSTEM) (DIAGNOSTICS) . . . DI–496 (1)
CIRCUIT INSPECTION (ENGINE) (DIAGNOSTICS) . . . DI–23 (1)
CIRCUIT INSPECTION (SUPPLEMENTAL RESTRAINT SYSTEM) (DIAGNOSTICS) . . . DI–339 (1)
CIRCUIT OPENING RELAY . . . SF–53 (2)
CLIP . . . BO–1 (2)
CLOCK . . . BE–122 (2)
CLUTCH (PREPARATION) . . . PP–27 (1)
CLUTCH (SERVICE SPECIFICATIONS) . . . SS–29 (1)
CLUTCH MASTER CYLINDER . . . CL–4 (2)
CLUTCH PEDAL . . . CL-2 (2)
CLUTCH RELEASE CYLINDER . . . CL-9 (2)
CLUTCH UNIT . . . CL–14 (2)
CO/HC . . . EM–1 (2)
COMBINATION METER . . . BE-39 (2)
COMPRESSION . . . EM–3 (2)
COMPRESSOR AND MAGNETIC CLUTCH . . . AC–35 (2)
CONDENSER . . . AC–43 (2)
CONDENSER FAN . . . AC–57 (2)
COOLANT . . . CO–1 (2)
COOLING (PREPARATION) . . . PP–11 (1)
COOLING (SERVICE SPECIFICATIONS) . . . SS–19 (1)
COOLING FAN RELAY . . . AC–56 (2)
COOLING FAN RELAY . . . CO–31 (2)
CRANKSHAFT POSITION SENSOR . . . IG–11 (2)
CRUISE CONTROL SYSTEM (DIAGNOSTICS) . . . DI–483 (1)
CUSTOMER PROBLEM ANALYSIS CHECK (ANTI-LOCK BRAKE SYSTEM WITH ELECTRONIC BRAKE FORCE DISTRIBUTION (EBD)) (DIAGNOSTICS) . . . DI–275 (1)
CUSTOMER PROBLEM ANALYSIS CHECK (AUTOMATIC TRANSAXLE (U240E)) (DIAGNOSTICS) . . . DI–156 (1)
CUSTOMER PROBLEM ANALYSIS CHECK (AUTOMATIC TRANSAXLE (U341E)) (DIAGNOSTICS) . . . DI–219 (1)
CUSTOMER PROBLEM ANALYSIS CHECK (BODY CONTROL SYSTEM) (DIAGNOSTICS) . . . DI–536 (1)
CUSTOMER PROBLEM ANALYSIS CHECK (CRUISE CONTROL SYSTEM) (DIAGNOSTICS) . . . DI–484 (1)
CUSTOMER PROBLEM ANALYSIS CHECK (ENGINE) (DIAGNOSTICS) . . . DI–2 (1)
CUSTOMER PROBLEM ANALYSIS CHECK (SUPPLEMENTAL RESTRAINT SYSTEM) (DIAGNOSTICS) . . . DI–325 (1)
CYLINDER BLOCK . . . EM–85 (2)
CYLINDER HEAD . . . EM-36 (2)

D

	Page Vol.
DEFOGGER SYSTEM	BE–54 (2)
DIAGNOSTIC TROUBLE CODE CHART (ANTI–LOCK BRAKE SYSTEM WITH ELECTRONIC BRAKE FORCE DISTRIBUTION (EBD)) (DIAGNOSTICS)	DI–280 (1)
DIAGNOSTIC TROUBLE CODE CHART (AUTOMATIC TRANSAXLE (U240E)) (DIAGNOSTICS)	DI–168 (1)
DIAGNOSTIC TROUBLE CODE CHART (AUTOMATIC TRANSAXLE (U341E)) (DIAGNOSTICS)	DI–231 (1)
DIAGNOSTIC TROUBLE CODE CHART (CRUISE CONTROL SYSTEM) (DIAGNOSTICS)	DI–490 (1)
DIAGNOSTIC TROUBLE CODE CHART (ENGINE) (DIAGNOSTICS)	DI–14 (1)
DIAGNOSTIC TROUBLE CODE CHART (SUPPLEMENTAL RESTRAINT SYSTEM) (DIAGNOSTICS)	DI–332 (1)
DIFFERENTIAL CASE (C56)	MX–45 (2)
DIFFERENTIAL CASE (C60)	MX–48 (2)
DIFFERENTIAL OIL SEAL (U240E)	AX–14 (2)
DIFFERENTIAL OIL SEAL (U341E)	AX–13 (2)
DIRECT CLUTCH SPEED SENSOR (U341E)	AX–4 (2)
DOOR SIDE AIRBAG SENSOR	RS–67 (2)
DRIVE BELT	AC–16 (2)
DRIVE BELT	SR–3 (2)

E

EFI MAIN RELAY	SF–52 (2)
ELECTRIC COOLING FAN	CO–24 (2)
ELECTRIC TENSION REDUCER SYSTEM	BE–52 (2)
EMISSION CONTROL (PREPARATION)	PP–7 (1)
EMISSION CONTROL (SERVICE SPECIFICATIONS)	SS–16 (1)
EMISSION CONTROL SYSTEM	EC–1 (2)
ENGINE	MA–5 (1)
ENGINE (DIAGNOSTICS)	DM (1)
ENGINE CONTROL MODULE (ECM)	SF–71 (2)
ENGINE COOLANT TEMPERATURE (ECT) SENSOR	SF–62 (2)
ENGINE COOLANT TEMPERATURE (ECT) SWITCH	AC–72 (2)
ENGINE MECHANICAL (PREPARATION)	PP–2 (1)
ENGINE MECHANICAL (SERVICE SPECIFICATIONS)	SS–6 (1)
ENGINE UNIT	EM–70 (2)
EVAPORATIVE EMISSION (EVAP) CONTROL SYSTEM	EC–5 (2)
EXHAUST SYSTEM	EM–115 (2)

F

FLOOR SHIFT ASSEMBLY (U240E)	AX–17 (2)
FLOOR SHIFT ASSEMBLY (U341E)	AX–16 (2)
FOG LIGHT SYSTEM	BE–22 (2)
FOR ALL OF VEHICLES	IN–10 (1)
FRONT AIRBAG SENSOR	RS–57 (2)
FRONT AXLE HUB	SA–11 (2)
FRONT BRAKE CALIPER	BR–20 (2)
FRONT BRAKE PAD	BR–17 (2)
FRONT BUMPER	BO–4 (2)
FRONT DOOR	BO–10 (2)
FRONT DRIVE SHAFT	SA–18 (2)
FRONT LOWER BALL JOINT	SA–46 (2)
FRONT LOWER SUSPENSION ARM	SA–41 (2)
FRONT PASSENGER AIRBAG ASSEMBLY	RS–26 (2)
FRONT SEAT	BO–92 (2)
FRONT SHOCK ABSORBER	SA–33 (2)
FRONT SPEED SENSOR	BR–55 (2)
FRONT STABILIZER BAR	SA–50 (2)
FRONT WHEEL ALIGNMENT	SA–4 (2)
FRONT WHEEL HUB BOLT	SA–17 (2)
FRONT WIPER AND WASHER	BO–28 (2)
FUEL CUT RPM	SF–73 (2)
FUEL PRESSURE REGULATOR	SF–15 (2)
FUEL PUMP	SF–6 (2)
FUEL TANK AND LINE	SF–26 (2)

G

GENERAL INFORMATION (HOW TO TROUBLESHOOT ECU CONTROLLED SYSTEMS)	IN–19 (1)
GENERAL INFORMATION (HOW TO USE THIS MANUAL)	IN–1 (1)
GENERAL INFORMATION (REPAIR INSTRUCTIONS)	IN–4 (1)
GENERATOR	CH–5 (2)
GLOSSARY OF SAE AND TOYOTA TERMS (TERMS)	IN–40 (1)

H

HEADLIGHT	BO–6 (2)
HEADLIGHT AND TAILLIGHT SYSTEM	BE–15 (2)
HEATED OXYGEN SENSOR	SF–69 (2)
HEATER CONTROL ASSEMBLY	AC–65 (2)
HEATER MAIN RELAY	AC–54 (2)
HOOD	BO–9 (2)
HORN SYSTEM	BE–125 (2)
HOW TO PROCEED WITH TROUBLESHOOTING (ANTI-LOCK BRAKE SYSTEM WITH ELECTRONIC BRAKE FORCE DISTRIBUTION (EBD)) (DIAGNOSTICS)	DI–274 (1)
HOW TO PROCEED WITH TROUBLESHOOTING (AUTOMATIC TRANSAXLE (U240E)) (DIAGNOSTICS)	DI–155 (1)
HOW TO PROCEED WITH TROUBLESHOOTING (AUTOMATIC TRANSAXLE (U341E)) (DIAGNOSTICS)	DI–218 (1)
HOW TO PROCEED WITH TROUBLESHOOTING (BODY CONTROL SYSTEM) (DIAGNOSTICS)	DI–535 (1)
HOW TO PROCEED WITH TROUBLESHOOTING (CRUISE CONTROL SYSTEM) (DIAGNOSTICS)	DI–483 (1)
HOW TO PROCEED WITH TROUBLESHOOTING (ENGINE) (DIAGNOSTICS)	DI-1 (1)
HOW TO PROCEED WITH TROUBLESHOOTING (HOW TO TROUBLESHOOT ECU CONTROLLED SYSTEMS)	IN–20 (1)
HOW TO PROCEED WITH TROUBLESHOOTING (SUPPLEMENTAL RESTRAINT SYSTEM) (DIAGNOSTICS)	DI–324 (1)
HOW TO TROUBLESHOOT ECU CONTROLLED SYSTEMS	IN–19 (1)
HOW TO USE THE DIAGNOSTIC CHART AND INSPECTION PROCEDURE (HOW TO TROUBLESHOOT ECU CONTROLLED SYSTEMS)	IN–30 (1)
HOW TO USE THIS MANUAL	IN-1 (1)

I

	Page	Vol.
IDENTIFICATION INFORMATION	IN–3	(1)
IDLE AIR CONTROL (IAC) VALVE	SF–40	(2)
IDLESPEED	EM–14	(2)
IGNITION (PREPARATION)	PP–19	(1)
IGNITION (SERVICE SPECIFICATIONS)	SS–23	(1)
IGNITION COIL	IG–5	(2)
IGNITION SWITCH AND KEY UNLOCK WARNING SWITCH	BE–13	(2)
IGNITION SYSTEM	IG–1	(2)
IGNITION TIMING	EM–13	(2)
INJECTOR	SF–18	(2)
INPUT SHAFT (C56)	MX-26	(2)
INPUT SHAFT (C60)	MX–29	(2)
INSIDE VEHICLE	MA–2	(1)
INSTRUMENT PANEL	BO–76	(2)
INTERIOR LIGHT SYSTEM	BE-27	(2)

K

KNOCK SENSOR	SF–66	(2)

L

LUBRICATION (PREPARATION)	PP–15	(1)
LUBRICATION (SERVICE SPECIFICATIONS)	SS–21	(1)

M

MAGNETIC CLUTCH RELAY	AC–55	(2)
MAINTENANCE (PREPARATION)	PP–1	(1)
MAINTENANCE (SERVICE SPECIFICATIONS)	SS–4	(1)
MANIFOLD GAUGE SET	AC–19	(2)
MANUAL TRANSAXLE (C56) (PREPARATION)	PP–31	(1)
MANUAL TRANSAXLE (C56) (SERVICE SPECIFICATIONS)	SS–31	(1)
MANUAL TRANSAXLE (C60) (PREPARATION)	PP–38	(1)
MANUAL TRANSAXLE (C60) (SERVICE SPECIFICATIONS)	SS–36	(1)
MANUAL TRANSAXLE ASSEMBLY (C56)	MX–9	(2)
MANUAL TRANSAXLE ASSEMBLY (C60)	MX-9	(2)
MANUAL TRANSAXLE UNIT (C56)	MX–2	(2)
MANUAL TRANSAXLE UNIT (C60)	MX–2	(2)
MASS AIR FLOW (MAF) METER	SF–29	(2)

O

OIL AND FILTER	LU–1	(2)
OIL NOZZLE (2ZZ–GE)	LU–14	(2)
OIL PUMP	LU–5	(2)
OUTPUT SHAFT (C56)	MX–34	(2)
OUTPUT SHAFT (C60)	MX–37	(2)
OUTSIDE VEHICLE	MA–1	(1)

P

PARK/NEUTRAL POSITION (PNP) SWITCH (U240E)	AX–8	(2)
PARK/NEUTRAL POSITION (PNP) SWITCH (U341E)	AX-7	(2)
PARKING BRAKE	BR–42	(2)
PARKING BRAKE LEVER	BR–8	(2)
PARTS LAYOUT AND SCHEMATIC DRAWING	EC–2	(2)
PARTS LOCATION (ANTI-LOCK BRAKE SYSTEM WITH ELECTRONIC BRAKE FORCE DISTRIBUTION (EBD)) (DIAGNOSTICS)	DI–281	(1)
PARTS LOCATION (AUTOMATIC TRANSAXLE (U240E)) (DIAGNOSTICS)	DI–169	(1)
PARTS LOCATION (AUTOMATIC TRANSAXLE (U341E)) (DIAGNOSTICS)	DI–232	(1)
PARTS LOCATION (BODY CONTROL SYSTEM) (DIAGNOSTICS)	DI–537	(1)
PARTS LOCATION (CRUISE CONTROL SYSTEM) (DIAGNOSTICS)	DI–491	(1)
PARTS LOCATION (ENGINE) (DIAGNOSTICS)	DI–19	(1)
PARTS LOCATION (SUPPLEMENTAL RESTRAINT SYSTEM) (DIAGNOSTICS)	DI–335	(1)
POSITIVE CRANKCASE VENTILATION (PCV) SYSTEM	EC–4	(2)
POWER DOOR LOCK CONTROL SYSTEM	BE–62	(2)
POWER MIRROR CONTROL SYSTEM	BE–85	(2)
POWER SOURCE	BE–10	(2)
POWER STEERING FLUID	SR–4	(2)
POWER STEERING GEAR	SR-33	(2)
POWER STEERING VANE PUMP	SR-22	(2)
POWER WINDOW CONTROL SYSTEM	BE–58	(2)
PRE–CHECK (ANTI–LOCK BRAKE SYSTEM WITH ELECTRONIC BRAKE FORCE DISTRIBUTION (EBD)) (DIAGNOSTICS)	DI–276	(1)
PRE–CHECK (AUTOMATIC TRANSAXLE (U240E)) (DIAGNOSTICS)	DI–157	(1)
PRE–CHECK (AUTOMATIC TRANSAXLE (U341E)) (DIAGNOSTICS)	DI–220	(1)
PRE–CHECK (CRUISE CONTROL SYSTEM) (DIAGNOSTICS)	DI–485	(1)
PRE–CHECK (ENGINE) (DIAGNOSTICS)	DI–3	(1)
PRE–CHECK (SUPPLEMENTAL RESTRAINT SYSTEM) (DIAGNOSTICS)	DI–326	(1)
PRECAUTION (FOR ALL OF VEHICLES)	IN–10	(1)
PRESSURE SWITCH	AC–51	(2)
PROBLEM SYMPTOMS TABLE (ANTI–LOCK BRAKE SYSTEM WITH ELECTRONIC BRAKE FORCE DISTRIBUTION (EBD)) (DIAGNOSTICS)	DI–284	(1)
PROBLEM SYMPTOMS TABLE (AUTOMATIC TRANSAXLE (U240E)) (DIAGNOSTICS)	DI–172	(1)
PROBLEM SYMPTOMS TABLE (AUTOMATIC TRANSAXLE (U341E)) (DIAGNOSTICS)	DI–234	(1)
PROBLEM SYMPTOMS TABLE (BODY CONTROL SYSTEM) (DIAGNOSTICS)	DI–542	(1)
PROBLEM SYMPTOMS TABLE (CRUISE CONTROL SYSTEM) (DIAGNOSTICS)	DI–494	(1)
PROBLEM SYMPTOMS TABLE (ENGINE) (DIAGNOSTICS)	DI–22	(1)
PROBLEM SYMPTOMS TABLE (SUPPLEMENTAL RESTRAINT SYSTEM) (DIAGNOSTICS)	DI–338	(1)
PROPORTIONING VALVE (P VALVE)	BR–47	(2)

Q

	Page	Vol.
QUARTER WINDOW GLASS	BO–55	(2)

R

RADIATOR	CO–12	(2)
REAR AXLE CARRIER	SA–54	(2)
REAR BRAKE CALIPER	BR-36	(2)
REAR BRAKE PAD	BR–33	(2)
REAR BUMPER	BO–5	(2)
REAR DRUM BRAKE	BR–28	(2)
REAR LOWER SUSPENSION ARM	SA–71	(2)
REAR SEAT	BO–101	(2)
REAR SHOCK ABSORBER	SA–61	(2)
REAR SPEED SENSOR	BR–58	(2)
REAR STABILIZER BAR	SA–75	(2)
REAR UPPER SUSPENSION ARM	SA–68	(2)
REAR WHEEL ALIGNMENT	SA–8	(2)
REAR WHEEL HUB BOLT	SA–60	(2)
REAR WIPER AND WASHER	BO–33	(2)
REFRIGERANT LINE	AC–21	(2)
REPAIR INSTRUCTIONS	IN–4	(1)
REVERSE SHIFT WARNING BUZZER SYSTEM (C60)	MX-55	(2)
ROOF DRIP SIDE MOULDING	BO–38	(2)
ROOF HEADLINING	BO–86	(2)
ROOF SIDE MOULDING	BO–42	(2)

S

SEAT BELT	BO–106	(2)
SEAT BELT PRETENSIONER	BO–109	(2)
SFI (PREPARATION)	PP–8	(1)
SFI (SERVICE SPECIFICATIONS)	SS–17	(1)
SFI SYSTEM	SF–1	(2)
SHIFT AND SELECT LEVER SHAFT (C56)	MX–44	(2)
SHIFT AND SELECT LEVER SHAFT (C60)	MX–47	(2)
SHIFT LEVER AND CONTROL CABLE (C56)	MX–52	(2)
SHIFT LEVER AND CONTROL CABLE (C60)	MX–57	(2)
SHIFT LOCK SYSTEM (U240E)	AX–15	(2)
SHIFT LOCK SYSTEM (U341E)	AX–14	(2)
SIDE AIRBAG ASSEMBLY	RS–39	(2)
SIDE AIRBAG SENSOR ASSEMBLY	RS–62	(2)
SIDE MUD GUARD	BO–46	(2)
SLIDING ROOF	BO–69	(2)
SLIDING ROOF SYSTEM	BE–82	(2)
SPEED SENSOR (U240E)	AX–4	(2)
SRS AIRBAG	BO–3	(2)
SRS AIRBAG	RS–1	(2)
STANDARD BOLT (SERVICE SPECIFICATIONS)	SS–1	(1)
STARTER	ST–2	(2)
STARTER RELAY	ST–17	(2)
STARTING (PREPARATION)	PP–21	(1)
STARTING (SERVICE SPECIFICATIONS)	SS–25	(1)
STARTING SYSTEM	ST–1	(2)
STEERING (PREPARATION)	PP–67	(1)
STEERING (SERVICE SPECIFICATIONS)	SS–51	(1)
STEERING SYSTEM	SR–1	(2)
STEERING WHEEL	SR–8	(2)
STEERING WHEEL PAD AND SPIRAL CABLE	RS–12	(2)
STOP LIGHT SYSTEM	BE-32	(2)
SUPPLEMENTAL RESTRAINT SYSTEM (DIAGNOSTICS)	DI–324	(1)
SUPPLEMENTAL RESTRAINT SYSTEM (PREPARATION)	PP–74	(1)
SUPPLEMENTAL RESTRAINT SYSTEM (SERVICE SPECIFICATIONS)	SS–53	(1)
SUSPENSION AND AXLE (PREPARATION)	PP–56	(1)
SUSPENSION AND AXLE (SERVICE SPECIFICATIONS)	SS–45	(1)

T

TERMINALS OF ECM (AUTOMATIC TRANSAXLE (U240E)) (DIAGNOSTICS)	DI–170	(1)
TERMINALS OF ECM (AUTOMATIC TRANSAXLE (U341E)) (DIAGNOSTICS)	DI–233	(1)
TERMINALS OF ECM (ENGINE) (DIAGNOSTICS)	DI–20	(1)
TERMINALS OF ECU (ANTI–LOCK BRAKE SYSTEM WITH ELECTRONIC BRAKE FORCE DISTRIBUTION (EBD)) (DIAGNOSTICS)	DI–282	(1)
TERMINALS OF ECU (BODY CONTROL SYSTEM) (DIAGNOSTICS)	DI–539	(1)
TERMINALS OF ECU (CRUISE CONTROL SYSTEM) (DIAGNOSTICS)	DI–492	(1)
TERMINALS OF ECU (SUPPLEMENTAL RESTRAINT SYSTEM) (DIAGNOSTICS)	DI–336	(1)
TERMS	IN–35	(1)
THERMISTOR	AC–50	(2)
THERMOSTAT	CO–8	(2)
THREE-WAY CATALYTIC CONVERTER (TWC) SYSTEM	EC–11	(2)
THROTTLE BODY	SF-33	(2)
TILT STEERING COLUMN	SR-9	(2)
TIMING CHAIN	EM–15	(2)
TIRE AND WHEEL	SA–2	(2)
TORQUE CONVERTER CLUTCH AND DRIVE PLATE (U240E)	AX–36	(2)
TORQUE CONVERTER CLUTCH AND DRIVE PLATE (U341E)	AX-36	(2)
TROUBLESHOOTING	AC–14	(2)
TROUBLESHOOTING	BE–2	(2)
TROUBLESHOOTING	BR–2	(2)
TROUBLESHOOTING	CL–1	(2)
TROUBLESHOOTING	SA–1	(2)
TROUBLESHOOTING	SR-2	(2)
TROUBLESHOOTING (C56)	MX–1	(2)
TROUBLESHOOTING (C60)	MX–1	(2)
TURN SIGNAL AND HAZARD WARNING SYSTEM	BE–25	(2)

U

UNDER HOOD	MA–4	(1)

V

VALVE BODY ASSEMBLY (U240E)	AX–10	(2)
VALVE BODY ASSEMBLY (U341E)	AX-9	(2)
VALVE CLEARANCE	EM–4	(2)
VAPOR PRESSURE SENSOR	SF–64	(2)
VEHICLE IDENTIFICATION AND ENGINE SERIAL NUMBER (IDENTIFICATION INFORMATION)	IN–3	(1)
VEHICLE LIFT AND SUPPORT LOCATIONS (REPAIR INSTRUCTIONS)	IN–8	(1)
VEHICLE SPEED SENSOR (U240E)	AX–3	(2)
VEHICLE SPEED SENSOR (U341E)	AX-3	(2)
VSV FOR CANISTER CLOSED VALVE (CCV)	SF-58	(2)
VSV FOR EVAPORATIVE EMISSION (EVAP)	SF–56	(2)
VSV FOR INTAKE AIR CONTROL VALVE	SF-54	(2)
VSV FOR PRESSURE SWITCHING VALVE	SF–60	(2)

W

	Page	Vol.
WATER PUMP	CO–4	(2)
WINDSHIELD	BO–47	(2)
WIPER AND WASHER SYSTEM	BE–34	(2)
WIRE HARNESS AND CONNECTOR	RS–72	(2)
WIRELESS DOOR LOCK CONTROL SYSTEM	BE–67	(2)

ID

– MEMO –

ID

TOYOTA

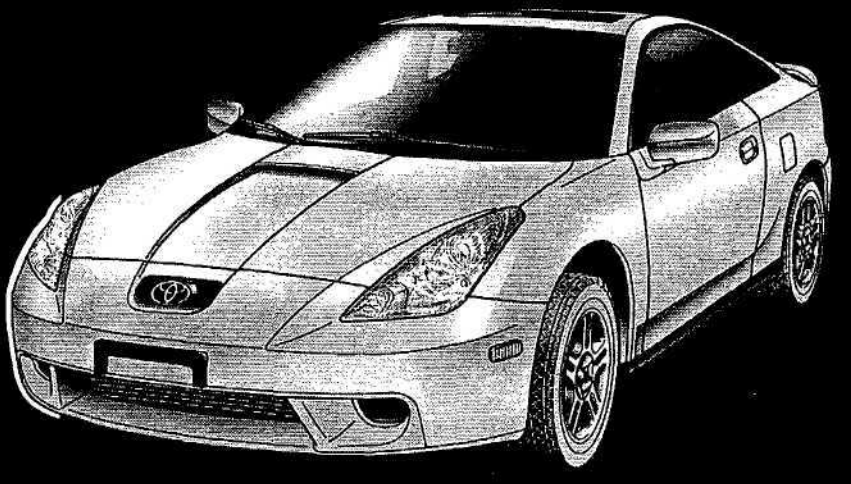

REPAIR MANUAL

- ENGINE
- CHASSIS
- BODY
- ELECTRICAL

Pub. No. RM744U2

VOLUME 2

FOREWORD

This manual (Volume 2) contains repair procedures for the engine, chassis and body, and electrical service procedures for the 2000 CELICA.

Applicable models: ZZT230, 231 series

For maintenance, preparation, specifications and diagnostics service procedures, refer to VOLUME 1 (Pub. No. RM744U1).

The manual is divided into 21 sections with a thumb index for each section at the edge of the pages.

Please note that the publications below have also been prepared as relevant service manuals for the components and systems in this vehicles.

Manual Name	Pub. No.
• U240E Automatic Transaxle Repair Manual (Aug., 1999)	RM740U
• U340E, U341E Automatic Transaxle Repair Manual (Aug., 1999)	RM735U
• 2000 CELICA Electrical Wiring Diagram	EWD399U
• 2000 CELICA New Car Features	NCF169U

All information in this manual is based on the latest product information at the time of publication. However, specifications and procedures are subject to change without notice.

TOYOTA MOTOR CORPORATION

©2000 TOYOTA MOTOR CORPORATION
All rights reserved. This book may not be reproduced or copied, in whole or in part, without the written permission of Toyota Motor Corporation.
First Printing: Jul. 14, 1999 01-990714-00
Fourth Printing: Mar. 14, 2000 04-000314-01

CAUTION

This manual does not include all the necessary items about repair and service. This manual is made for the purpose of the use for the persons who have special techniques and certifications. In the cases that non–specialized or uncertified technicians perform repair or service only using this manual or without proper equipment or tool, that may cause severe injury to you or other people around and also cause damage to your customer's vehicle.

In order to prevent dangerous operation and damages to your customer's vehicle, be sure to follow the instruction shown below.

- Must read this manual thoroughly. It is especially important to have good understanding all the contents written in the PRECAUTION of "IN" section.
- The service method written in this manual is very effective to perform repair and service. When performing the operations following the procedures using this manual, be sure to use tools specified and recommended. If using non–specified or recommended tools and service method, be sure to confirm safety of the technicians and any possibility of causing personal injury or damage to the customer's vehicle before starting the operation.
- If part replacement is necessary, must replace the part with the same part number or equivalent part. Do not replace it with inferior quality.
- It is important to note that this manual contains various "Cautions" and "Notices" that must be carefully observed in order to reduce the risk of personal injury during service or repair, or the possibility that improper service or repair may damage the vehicle or render it unsafe. It is also important to understand that these "Cautions" and "Notices" are not exhaustive, because it is important to warn of all the possible hazardous consequences that might result from failure to follow these instructions.

NOTE: The screen toned sections below are in VOLUME 1 (Pub. No. **RM744U1).**

INTRODUCTION IN
MAINTENANCE MA
PREPARATION PP
SERVICE SPECIFICATIONS SS
DIAGNOSTICS DI
ENGINE MECHANICAL EM
EMISSION CONTROL EC
SFI SF
COOLING CO
LUBRICATION LU
IGNITION IG
STARTING ST
CHARGING CH
CLUTCH CL
C56 MANUAL TRANSAXLE MX
C60 MANUAL TRANSAXLE MX
U240E AUTOMATIC TRANSAXLE AX
U341E AUTOMATIC TRANSAXLE AX
SUSPENSION AND AXLE SA
BRAKE BR
STEERING SR
SUPPLEMENTAL RESTRAINT SYSTEM RS
BODY ELECTRICAL BE
BODY BO
AIR CONDITIONING AC
ALPHABETICAL INDEX ID

ENGINE MECHANICAL

CO/HC EM–1
COMPRESSION EM–3
VALVE CLEARANCE EM–4
IGNITION TIMING EM-13
IDLE SPEED EM–14
TIMING CHAIN EM–15
CYLINDER HEAD EM–36
ENGINE UNIT EM–70
CYLINDER BLOCK EM–85
EXHAUST SYSTEM EM–115

EM

CO/HC

INSPECTION

EM05J-05

HINT:
This check is used only to determine whether or not the idle CO/HC complies with regulations.

1. INSTALL CONDITIONS

(a) Engine at normal operating temperature
(b) Air cleaner installed
(c) Air pipes and hoses of air induction system connected
(d) All accessories switched OFF
(e) All vacuum lines properly connected
(f) SFI system wiring connectors fully plugged
(g) Ignition timing check correctly
(h) Transmission in neutral position
(i) Tachometer and CO/HC meter calibrated by hand

2. START ENGINE

3. RACE ENGINE AT 2,500 RPM FOR APPROX. 180 SECONDS

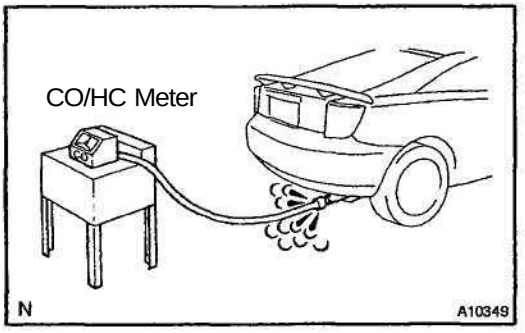

4. INSERT CO/HC METER TESTING PROBE AT LEAST 40 cm (1.3 ft) INTO TAILPIPE DURING IDLING

5. IMMEDIATELY CHECK CO/HC CONCENTRATION AT IDLE AND/OR 2,500 RPM

Complete the measuring with 3 minutes.
HINT:
When doing the 2 mode (idle and 2,500 rpm) test, these measurement order prescribed by the applicable local regulations.

If the CO/HC concentration does not comply with regulations, troubleshoot in the order given below.

- Check heated oxygen sensor operation (See page DI–49).
- See the table below for possible causes, and then inspect and correct the applicable causes if necessary.

CO	HC	Problems	Causes
Normal	High	Rough idle	1. Faulty ignitions: • Incorrect timing • Fouled, shorted or improperly gapped plugs • Open or crossed high–tension cords 2. Incorrect valve clearance 3. Leaky intake and exhaust valves 4. Leaky cylinders
Low	High	Rough idle (Fluctuating HC reading)	1. Vacuum leaks: • PCV hoses • Intake manifold • Throttle body • IAC valve • Brake booster line 2. Lean mixture causing misfire
High	High	Rough idle (Black smoke from exhaust)	1. Restricted air filter 2. Plugged PCV valve 3. Faulty SFI systems: • Faulty pressure regulator • Defective ECT sensor • Defective IAT sensor • Faulty ECM • Faulty injectors • Faulty throttle position sensor

COMPRESSION

INSPECTION

EM0SK–05

HINT:

If there is lack of power, excessive oil consumption or poor fuel economy, measure the compression pressure.

1. WARM UP AND STOP ENGINE

Allow the engine to warm up to normal operating temperature.

2. REMOVE IGNITION COIL (See page IG–6)

3. REMOVE SPARK PLUGS

4. INSPECT CYLINDER COMPRESSION PRESSURE

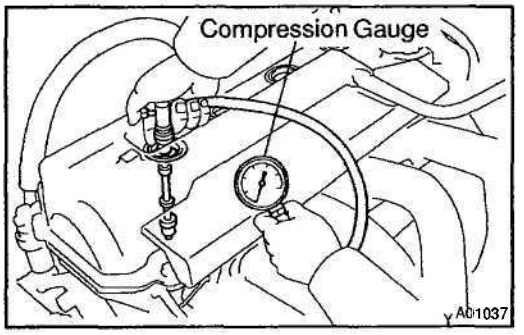

(a) Insert a compression gauge into the spark plug hole.

(b) Fully open the throttle.

(c) While cranking the engine, measure the compression pressure.

EM

HINT:

Always use a fully charged battery to obtain engine speed of 250 rpm or more.

(d) Repeat steps (a) through (c) for each cylinder.

NOTICE:

This measurement must be done in as short a time as possible.

Compression pressure:
1ZZ-FE 1,500 kPa (15.3 kgf/cm^2, 218 psi)
2ZZ–GE 1,400 kPa (14.3 kgf/cm^2, 203 psi) or more
Minimum pressure:
1ZZ-FE 1,000 kPa (10.2 kgf/cm^2, 145 psi)
2ZZ–GE 1,000 kPa (10.2 kgf/cm^2, 145 psi)
Difference between each cylinder:
1ZZ-FE 100 kPa (1.0 kgf/cm^2, 15 psi) or less
2ZZ–GE 110 kPa (1.1 kgf/cm^2, 16 psi) or less

(e) If the cylinder compression in one more cylinders is low, pour a small amount of engine oil into the cylinder through the spark plug hole and repeat steps (a) through (c) for cylinders with low compression.

- If adding oil helps the compression, it is likely that the piston rings and/or cylinder bore are worn or damaged.
- If pressure stays low, a valve may be sticking or seating is improper, or there may be leakage past the gasket.

5. REINSTALL SPARK PLUGS

6. INSTALL IGNITION COIL (See page IG–7)

VALVE CLEARANCE

EM15Q–01

ADJUSTMENT

HINT:

Inspect and adjust the valve clearance when the engine is cold.

1. REMOVE CYLINDER HEAD COVER

(See page EM–18)

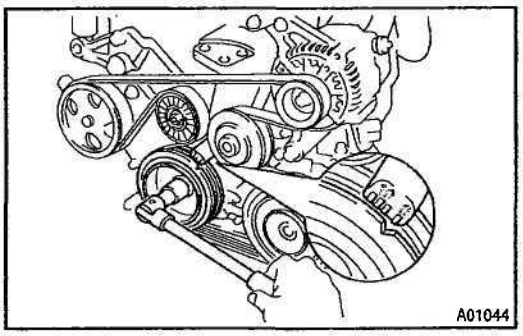

2. SET NO. 1 CYLINDER TO TDC/COMPRESSION

(a) Turn the crankshaft pulley, and align its groove with the timing mark "0" of the timing chain cover.

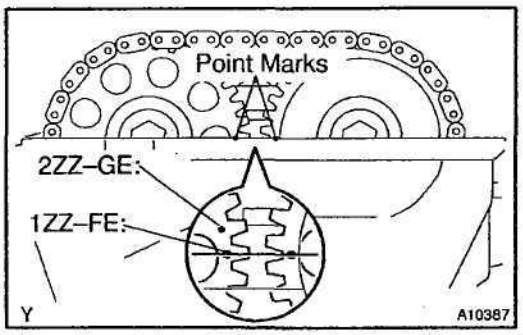

(b) Check that the point marks of the camshaft timing sprockets are in straight line on the timing chain cover surface as shown in the illustration.

If not, turn the crankshaft 1 revolution (360°) and align the marks as above.

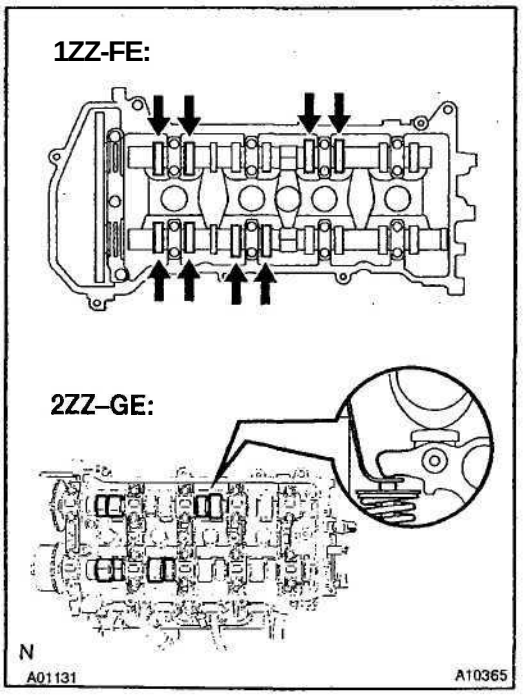

3. INSPECT VALVE CLEARANCE

(a) Gheck only the valves indicated.

- Using a feeler gauge, measure the clearance between the valve lifter and camshaft.
- Record the out–of–specification valve clearance measurements. They will be used later to determine the required replacement adjusting shim.

Valve clearance (Cold):

1ZZ-FE:

Intake 0.15 - 0.25 mm (0.006 - 0.010 in.)

Exhaust 0.25 - 0.35 mm (0.010 - 0.014 in.)

2ZZ–GE:

Intake 0.15 - 0.25 mm (0.006 - 0.010 in.)

Exhaust 0.35 - 0.45 mm (0.014 - 0.018 in.)

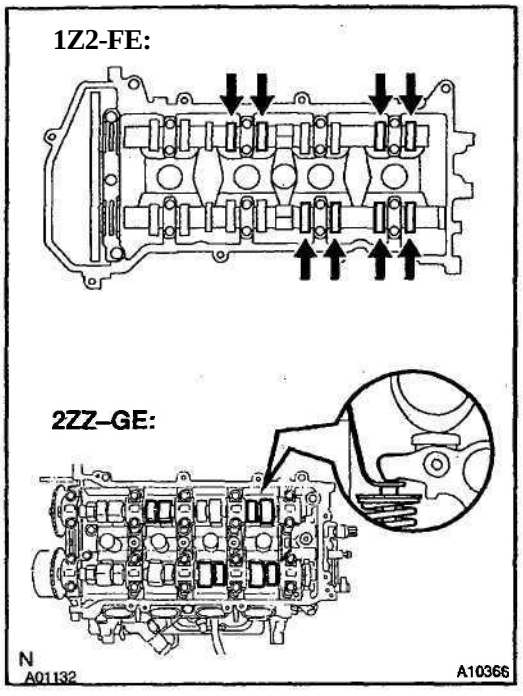

(b) Turn the crankshaft 1 revolution (360°) and align the mark as above (See procedure in step 2).

(c) Check only the valves indicated as shown. Measure the valve clearance (See procedure in step (a)).

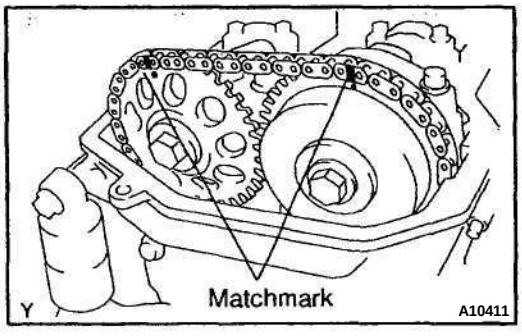

4. 1ZZ–FE:

ADJUST VALVE CLEARANCE

(a) Set the No. 1 cylinder to the TDC/compression (See procedure in step 2).

(b) Place matchmarks on the timing chain and camshaft timing sprockets.

(c) Remove the 2 bolts and chain tensioner.

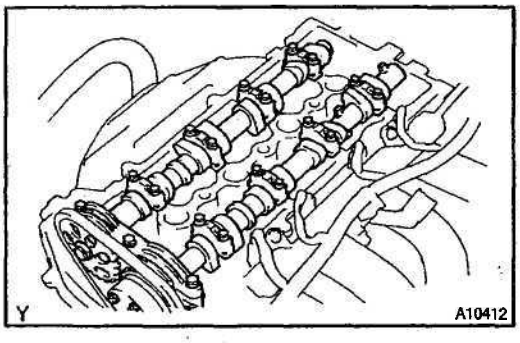

(d) Remove the camshaft and timing sprocket assemblies (See page EM–42).

(1) 19 camshaft bearing cap bolts
(2) 9 camshaft bearing caps (No. 1 & No. 3)
(3) Exhaust camshaft and timing sprocket assembly
(4) Intake camshaft and timing sprocket assembly

HINT:

When disconnect the timing chain from the camshaft timing sprocket, holding the timing chain.

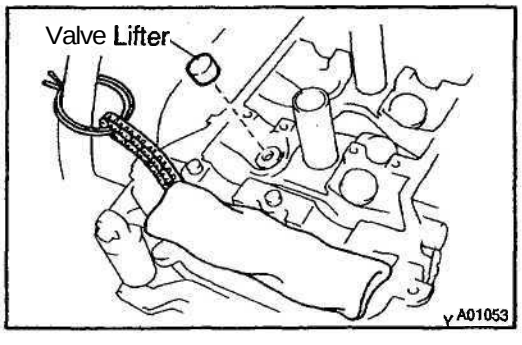

(e) Tie the timing chain with a string as shown in the illustration.

NOTICE:

- **Be careful not to drop anything inside the timing chain cover.**
- **Do not allow the chain to come into contact with water or dust.**

(f) Remove the valve lifters.

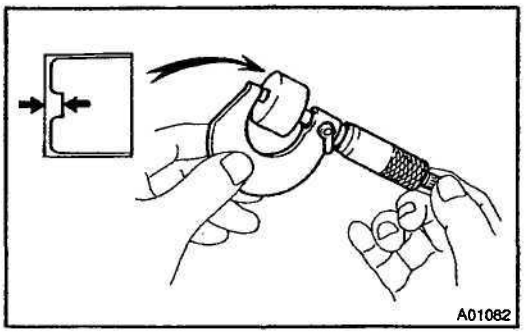

(g) Determine the replacement valve lifter size according to these Formula or Charts:

- Using a micrometer, measure the thickness of the removed lifter.
- Calculate the thickness of a new lifter so the valve clearance comes within the specified value.

T.....Thickness of used lifter
A.....Measured valve clearance
N.....Thickness of new lifter
Intake: N = T + (A - 0.20 mm (0.008 in.))
Exhaust: N = T + (A - 0.30 mm (0.012 in.))

- Select a new lifter with a thickness as close as possible to the calculated values.

EM

HINT:
Lifter are available in 35 sizes in increments of 0.020 mm (0.0008 in.), from 5.060 mm (0.1992 in.) to 5.740 mm (0.2260 in.).

5. 2ZZ–GE:
ADJUST VALVE CLEARANCE

(a) Remove the adjusting shim.
(1) Turn the crankshaft so that the cam lobe of camshaft on the adjusting valve points upward.

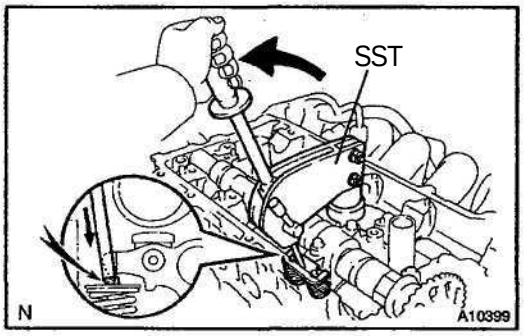

(2) Using SST, press down the valve.
(3) Using SST, remove the adjusting shim.

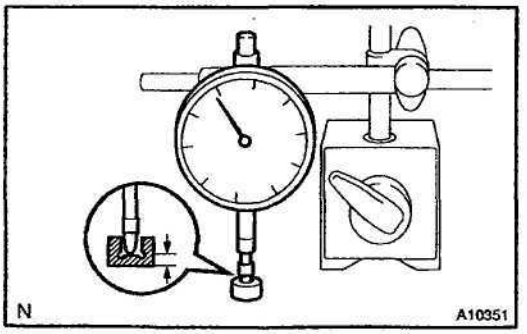

(4) Determine the replacement shim size according to these Formula or Charts:

- Using dial indicator, measure the thickness of the removed shim.
- Calculate the thickness of a new shim so the valve clearance comes within the specified value.

T.....Thickness of used shim
A.....Measured valve clearance
N.....Thickness of new shim
Intake: N = T+ (A - 0.20 mm (0.008 in.))
Exhaust: N = T+ (A - 0.40 mm (0.016 in.))

- Select a new shim with a thickness as close as possible to the calculated values.

HINT:
Shim are available in 41 size in increments of 0.020 mm (0.0008 in.), from 2.000 mm (0.0787 in.) to 2.800 mm (0.1102 in.).

EM

1ZZ–FE: Valve Lifter Selection Chart (Intake)

Installed lifter thickness mm (in) / Measured clearance mm (in.)	1 (0.1992)	5.080 a 2000)	5.100 (0.2008)	5.120 (0.2016)	5.140 (0.2024)	5.1S a 2031)	5.1a a 2039)	5.200 a 2047)	5.210 (0.2051)	)	[redacted]	5.240 (0.2063)	5.250 (0.2067)	5.260 (0.2071)	5.270 (0.2075)	5.280 (0.2079)	5.290 a 2083)	5.300 (0.2087)	5.310 (0.2091)	5.320 a 2094)	5.330 a 2098)	5.340 (0.21ω	5.350 (0.21S)	5.360 (0.211S	5.370 (0.2114)	5.380 a 211ω	5.390 (0.2122)	5.400 (0.2126)	5.410 (0.21f	5.420 (0.2134)	5.430 (0.2138)	5.440 a 21¥	5.450 a 21?	5.460 (0.21S	5.470 a 21S	5.480 (0.2157)	5.490 (0.215	5.500 (0.218)	5.510 (0.218)	55 a 21C	i 21f	5.540 a 215	1 a 21S	5.560 (0.2189)	5.570 (0.2193)	5.580 (0.2197)	5.590 (0.2201)	5.600 (0.2205)	5.620 a 2)	5.6?0 i 2220)	5.660 a 2228)	[redacted] a 2236)	5.700 (0.2244)	5.720 (0.2252)	5.740 (0.2260)
0.000 - 0.030 (0.0000 - 0.0012)									06	05	08	06	06	08	10	10	12	12	14	14	16	16	18	18	20	20	22	22	24	24	26	26	28	28	30	30	32	32	34	34	36	35	38	38	40	40	42	42	44	46	48	50	52	54	56
0.031 - 0.050 (0.0012 - 0.0020)							06	08	06	06	08	08	10	10	12	12	14	14	16	16	18	18	20	20	22	22	24	24	26	26	28	28	30	30	32	32	34	34	36	36	38	38	40	40	42	42	44	44	46	48	60	62	54	56	58
0.051 - 0.070 (0.0020 - 0 0028)						06	06	06	08	08	10	10	12	12	14	14	16	16	18	18	20	20	22	22	24	24	26	28	26	28	30	30	32	32	34	34	36	36	38	38	40	40	42	42	44	44	46	46	48	50	52	54	56	58	60
0.071 - 0.090 (0.0028 - 0.0035)					06	06	06	08	10	10	12	12	14	14	16	16	18	18	20	20	as	22	24	24	28	26	28	28	30	30	32	32	34	34	36	36	38	38	40	40	42	42	44	44	46	46	48	48	60	62	54	66	58	60	62
0.081 - 0 1 10 (0.0036 - O.OO43)				06	06	06	08	10	12	12	14	14	16	16	18	18	20	20	22	22	24	24	26	26	28	28	30	30	32	32	34	34	36	36	38	38	40	40	42	42	44	44	46	46	48	48	53	50	52	54	56	58	60	62	64
0 111 - 0.130 (0.0044 - 0.0051)			06	08	08	0B	10	12	14	14	16	16	18	18	20	20	22	22	24	24	26	26	28	28	30	30	32	32	34	34	36	36	38	38	40	40	42	42	44	44	46	46	46	48	50	50	52	52	54	56	58	60	62	64	66
0.131 - 0.149 (0.0052 - 0.0059)		06	06	06	08	10	12	14	16	16	18	18	20	20	22	22	24	24	26	26	28	26	30	30	32	32	34	34	36	36	38	38	40	40	42	42	44	44	46	46	48	48	50	50	52	52	54	54	56	5a	60	62	54	66	68
0.1 50 - 0.250 (0.0059 - 0,0098)																																																							
0.251 - 0.270 (0,0099 - 0.0106)	12	14	16	18	20	22	24	26	28	28	30	30	32	32	34	34	36	36	38	38	40	40	42	42	44	44	46	46	48	48	50	50	52	52	54	54	56	56	58	58	60	60	62	62	64	64	6S	66	68	70	72	74	74	74	
0.271 - 0.290 (0.0107 - 0.01 1 4)	14	16	18	20	22	24	26	28	30	30	32	32	34	34	36	36	38	38	40	40	42	42	44	44	46	46	48	46	50	50	52	52	54	54	56	66	58	58	60	60	62	62	64	64	66	66	68	68	70	72	74	74	74		
0.291 - 0.310 (0.0115 - 0.0122)	15	18	20	22	24	26	28	30	32	32	34	34	36	36	38	38	40	40	42	42	44	44	46	48	46	48	50	50	52	52	54	54	56	56	58	58	60	60	62	62	64	64	68	68	68	68	70	70	72	74	74	74			
0.311 - 0.330 (0.0122 - 0.0130)	18	20	22	24	28	28	30	32	34	34	36	36	38	38	40	40	42	42	44	44	48	46	48	48	50	50	62	52	54	54	66	66	68	58	60	60	62	62	64	64	6«	66	68	68	70	70	72	72	74	74	74				
0.331 - 0.350 (0.0130 - 0.0138)	20	22	24	26	28	30	32	34	36	36	38	38	40	40	42	42	44	44	46	48	48	48	50	50	52	52	54	54	56	56	58	58	60	60	62	62	64	64	66	66	68	68	70	70	72	72	74	74	74	74					
0.351 - 0 370 (0.0138 - 0.0146)	22	24	26	28	30	32	34	36	38	38	40	40	42	42	44	44	46	46	48	48	50	60	52	52	64	54	56	56	58	68	60	60	62	62	64	64	66	66	68	68	70	70	72	72	74	74	74	74	74						
0.371 - 0.390 (0.0146 - 0.0154)	24	26	28	30	32	34	36	38	40	40	42	42	44	44	46	46	48	48	50	60	52	52	54	54	56	5G	58	58	60	60	62	62	64	64	68	66	68	88	70	70	72	72	74	74	74	74	74	74							
0.391 - 0.410 (0.0154 - 0.0161)	26	28	30	32	34	36	38	40	42	42	44	44	46	46	48	48	50	50	52	52	54	54	53	56	56	58	60	e0	62	62	94	64	66	86	68	68	70	70	72	72	74	74	74	74	74	74	74								
0.411 - 0.430 (0.0162 - 0.0169)	28	30	32	34	38	38	40	42	44	44	46	46	48	48	SO	50	52	52	54	54	56	56	58	58	60	60	62	62	64	64	66	66	68	86	70	70	72	72	74	74	74	74	74	74											
0.431 - 0.450 (0.0170 - 0,0177)	30	32	34	36	38	40	42	44	46	45	48	48	50	50	52	62	54	54	56	56	68	58	60	60	62	62	64	64	66	66	68	68	70	70	72	72	74	74	74	74	74	74													
0.451 - 0 470 (0.0178 - 0.0185)	32	34	36	38	40	42	44	46	48	46	50	50	52	52	54	54	66	56	58	SB	60	60	82	62	64	64	66	66	68	68	70	70	72	72	74	74	74	74	74	74															
0.471 - 0.490 (0.0185 - 0.0193)	34	36	38	40	42	44	46	48	50	50	52	52	54	54	56	56	58	58	60	60	62	62	64	64	68	66	68	68	70	70	72	72	74	74	74	74	74	74																	
0.491 - 0.510 (0.0193 - 0.0201)	36	38	40	42	44	48	48	60	62	52	54	54	66	56	58	58	60	60	62	62	64	64	66	66	68	68	70	70	72	72	74	74	74	74	74	74																			
0.511 - 0.530 (0.0201 - 0.0209)	38	40	42	44	46	48	50	52	64	54	56	56	58	58	80	60	62	62	64	64	66	65	68	68	70	70	72	72	74	74	74	74	74	74																					
0.531 - 0.550 (0.0209 - 0.0217)	40	42	44	46	48	50	52	54	66	B6	58	68	60	60	62	62	64	64	66	66	68	68	70	70	72	72	74	74	74	74	74	74																							
0.351 - 0.570 (0.0217 - 0.0224)	42	44	46	48	50	52	64	56	58	58	50	60	62	52	64	64	66	66	68	68	70	70	72	72	74	74	74	74	74	74																									
0.571 - 0.590 (0.0225 - 0.0232]	44	46	48	50	62	54	66	58	60	60	62	62	64	64	6G	66	66	68	70	70	72	72	74	74	74	74	74	74																											
0.591 - 0.610 (0.0233 - 0.0240)	46	48	SO	52	54	58	58	60	62	62	64	64	66	66	68	68	70	70	72	72	74	74	74	74	74	74																													
0611 - 0.630 (0.0241 - 0.0248)	48	50	52	54	55	58	50	62	64	64	66	E6	58	69	70	70	72	72	74	74	74	74	74	74																															
0.631 - 0.650 (0.0248 - 0.0256)	60	52	54	56	58	60	62	64	66	66	68	69	70	70	72	72	74	74	74	74	74	74																																	
0.651 - 0.670 (0.0256 - 0.0264)	52	54	56	58	60	62	64	66	SB	68	70	70	72	72	74	74	74	74	74	74																																			
0.871 - 0.890 (0.0264 - 0.0272)	54	56	58	80	82	84	86	68	70	70	72	72	74	74	74	74	74	74																																					
0.691 -0,710(0.0272-0.0280)	06	68	60	62	64	66	68	70	72	72	74	74	74	74	74	74																																							
0.711 - 0.730 (0.0280 - 0.0287)	58	B0	62	64	66	68	70	72	74	74	74	74	74	74																																									
0 731 - 0.760 (0.0288 - 0.0295)	60	62	64	66	68	70	72	74	74	74	74	74																																											
0.751 - 0,770 (0.0296 - 0.0303)	62	64	66	66	70	72	74	74	74	74																																													
0.771 - 0.790 (0.0304 - 0.0311)	64	66	68	70	72	74	7*	74																																															
0.791 - 0.810 (0.0311 - 0.0319)	66	68	70	72	74	74	74																																																
0.811 - 0.830 (0.0319 - 0.0327)	68	70	72	74	74	74																																																	
0.831 - 0.850 (0,0327 - 0.0335)	70	72	74	74	74																																																		
0.851 - 0.870 (0.0335 - 0.0343)	72	74	74	74																																																			
0.871 - 0.890 (0.0343 - 0.0350)	74	74	74																																																				
ft.891 ft.910 (0.0351 0.0358)	74	74																																																					
0.911 - 0.9X (0.0359 - 0.0366)	74																																																						

New lifter thickness mm (in.)

Lifter No.	Thickness	Lifter No.	Thickness	Lifter No.	Thickness
06	5.060 (0.1992)	30	5.300 (0.2087)	54	5.540 (0.2181)
08	5.080 (0.2000)	32	5.320 (0.2094)	56	5.560(0.2189)
10	5.100(0.2008)	34	5.340(0.2102)	58	5.580 (0.2197)
12	5.120(0.2016)	36	5.360 (0.2110)	60	5.600 (0.2205)
14	5.140(0.2024)	38	5.380 (0.2118)	62	5.620(0.2213)
16	5.160(0.2031)	40	5.400(0.2126)	64	5.640 (0.2220)
18	5.180 (0.2039)	42	5.420 (0.2134)	66	5.660 (0.2228)
20	5.200 (0.2047)	44	5.440 (0.2142)	68	5.680 (0.2236)
22	5.220(0.2055)	46	5.460(0.2150)	70	5.700 (0.2244)
24	5.240 (0.2063)	48	5.480 (0.2157)	72	5.720(0.2252)
26	5.260 (0.2071)	50	5.500 (0.2165)	74	5.740 (0.2260)
26	5.280 (0.2079)	52	5.520 (0.2173)		

Intake **valve** clearance **(Cold):**
0.15 - 0.25 mm (0.006 - 0.010 in.)
EXAMPLE: The 5.250 mm (0.2067 in.) lifter is installed, and the measured clearance is 0.400 mm (0.0157 in.).
Replace the 5.250 mm (0.2067 in.) lifter with a new No. 48 lifter.

Valve Lifter Selection Chart (Exhaust)

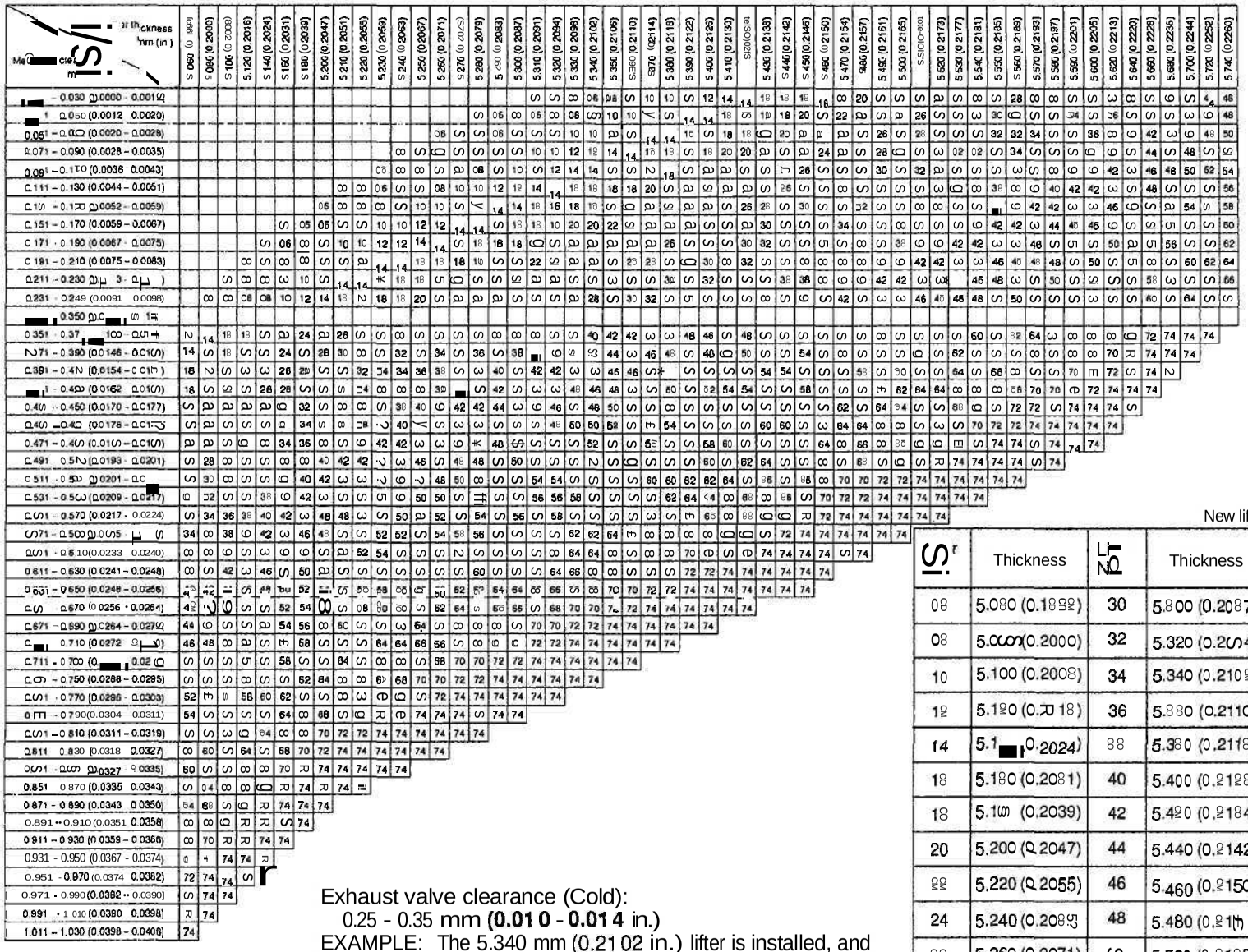

Exhaust valve clearance (Cold):
0.25 - 0.35 mm (0.010 - 0.014 in.)

EXAMPLE: The 5.340 mm (0.2102 in.) lifter is installed, and the measured clearance is 0.440 mm (0.0173 in.).
Replace the 5.340 mm (0.2102 in.) lifter with a new No. 48 lifter.

New lifter thickness mm (in.)

No.	Thickness	No.	Thickness	Lifter No.	Thickness
08	5.080 (0.2000)	30	5.300 (0.2087)	54	5.540 (0.2181)
08	5.000 (0.2000)	32	5.320 (0.2094)	88	5.560 (0.2189)
10	5.100 (0.2008)	34	5.340 (0.2102)	58	5.580 (0.2197)
12	5.120 (0.2016)	36	5.360 (0.2110)	58	5.600 (0.2205)
14	5.140 (0.2024)	88	5.380 (0.2118)	88	5.620 (0.2213)
18	5.160 (0.2031)	40	5.400 (0.2126)	84	5.640 (0.2220)
18	5.180 (0.2039)	42	5.420 (0.2134)	88	5.660 (0.2228)
20	5.200 (0.2047)	44	5.440 (0.2142)	88	5.680 (0.2236)
88	5.220 (0.2055)	46	5.460 (0.2150)	70	5.700 (0.2244)
24	5.240 (0.2063)	48	5.480 (0.2158)	72	5.720 (0.2252)
88	5.260 (0.2071)	58	5.500 (0.2165)	74	5.740 (0.2260)
88	5.280 (0.2079)	58	5.520 (0.2173)		

A01225

EM

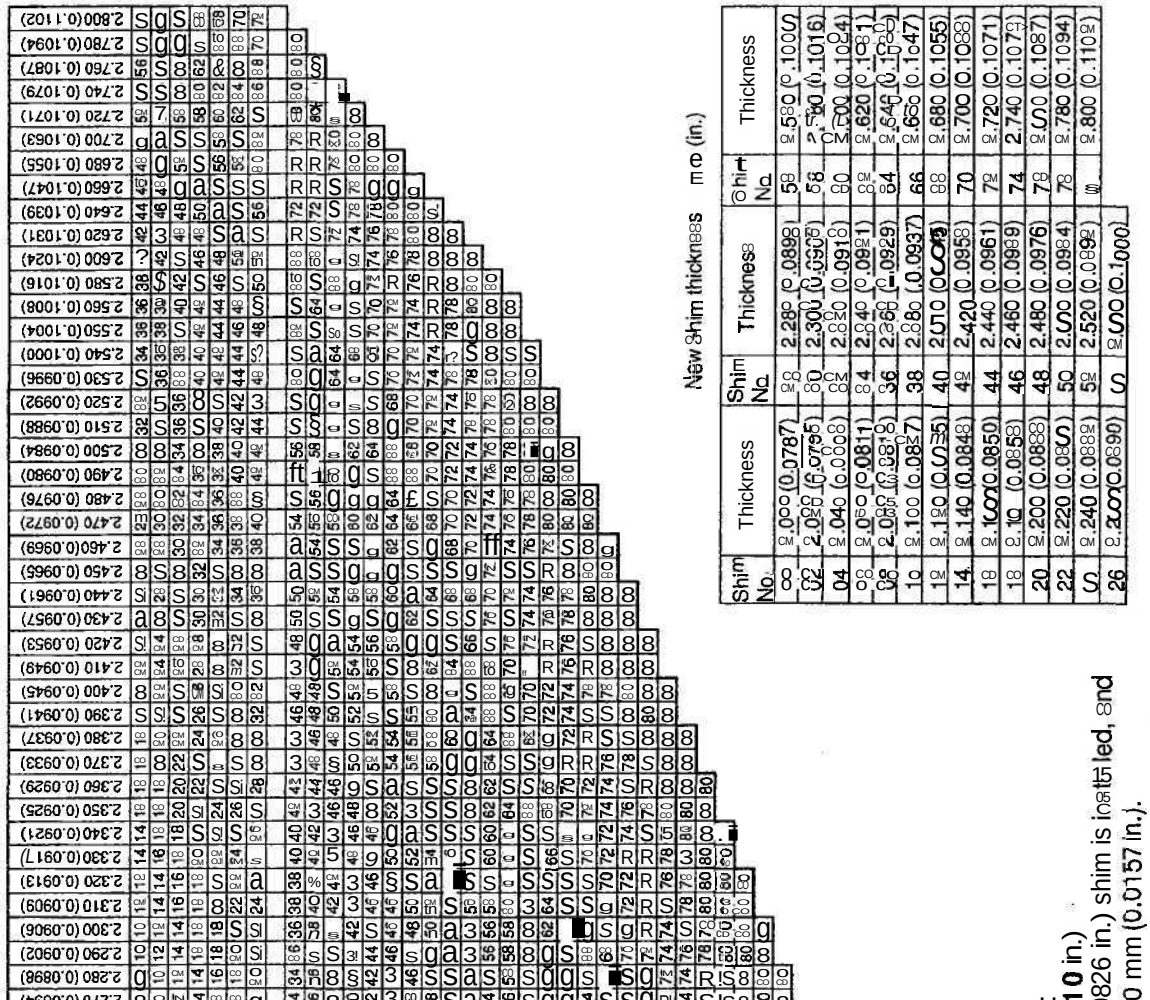
2ZC E: Valve Shim Selection Chart (I
Installed lifter thickness mm (in.)
Measure clearance mm (in.)
Intake valve clearance (Cold):
0.15 - 0.25 mm (0.006 - 0.010 in.)
EXAMPLE: The 2.200 mm (0.0826 in.) shim is installed, and the measured Clearance is 0.400 mm (0.0157 in.).
Replace the 2.400 mm (0.0945 in.) shim with a new No. 40 shim.
New Shim thickness mm (in.)
Shim No.
Thickness
A10466

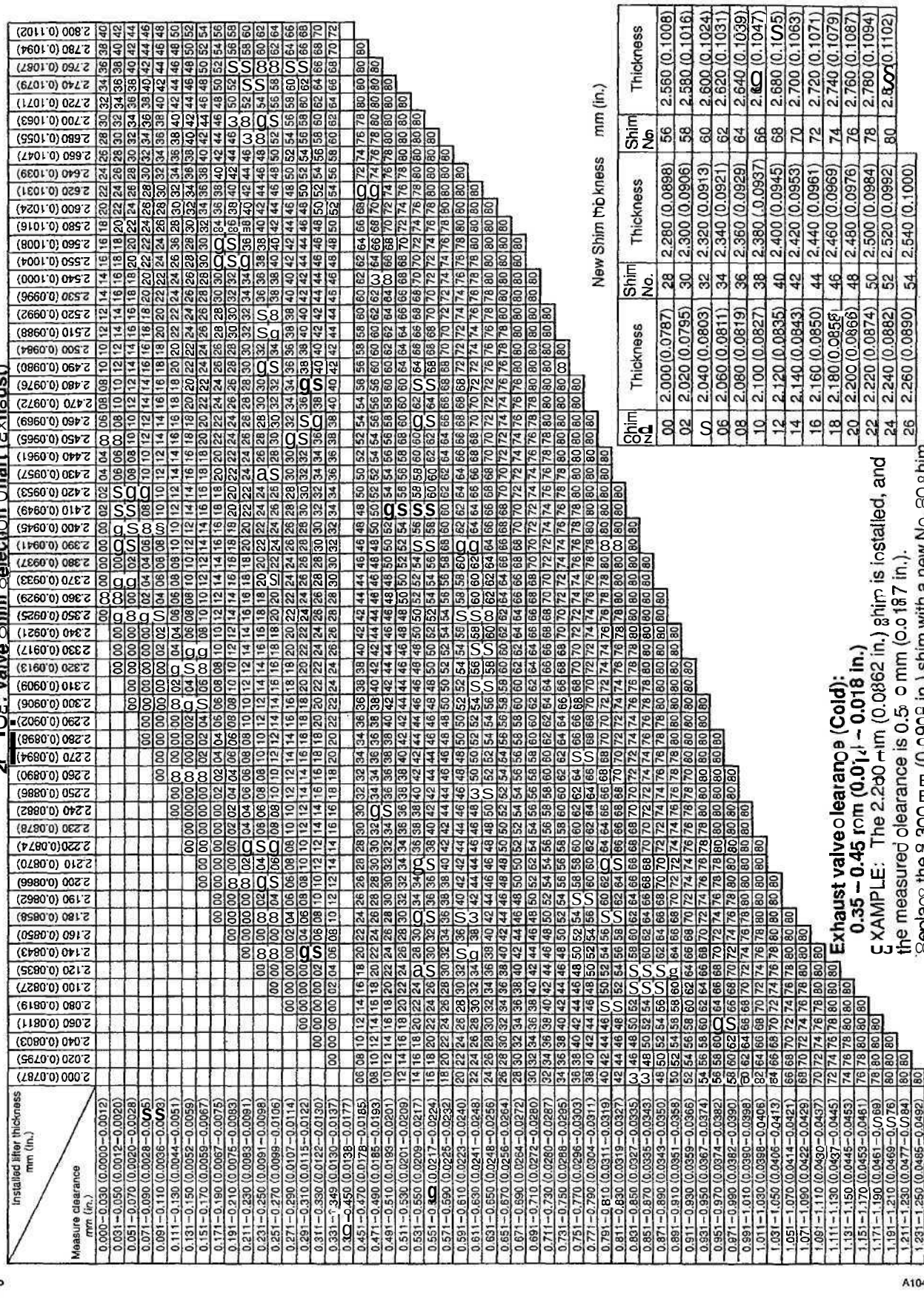
2. Type: Valve shim selection Chart (Exhaust)
Installed lifter thickness mm (in.)
Measure clearance mm (in.)
New Shim thickness mm (in.)
Shim No.
Thickness
Exhaust valve clearance (Cold):
0.35 ~ 0.45 mm (0.014 ~ 0.018 in.)
EXAMPLE: The 2.200 mm (0.0866 in.) shim is installed, and the measured clearance is 0.5 mm (0.0197 in.).
Replace the 2.300 mm (0.0906 in.) shim with a new No. 80 shim.
P
A10467

6. 1ZZ-FE:
REINSTALL CAMSHAFT

(a) Reinstall the valve lifters (See page EM–61).
(b) Align the crankshaft pulley groove with the timing mark "0" of the timing chain cover.
(c) Hold the timing chain, and place the intake camshaft and timing sprocket assembly.
(d) Align the matchmarks on the timing chain and camshaft timing sprocket.
(e) Reinstall the camshaft and timing sprocket assemblies (See page EM–65).

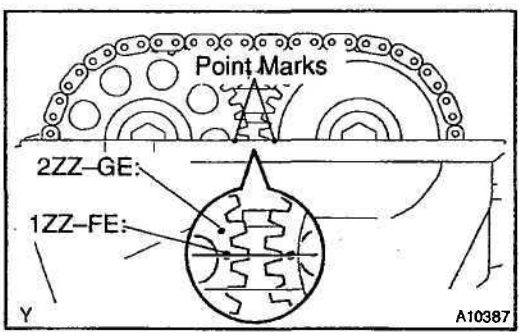

(f) Check that the point marks of the camshaft timing sprockets are in straight line on the timing chain cover surface as shown in the illustration.
(g) Check that the matchmarks on the timing chain and camshaft timing sprockets.
(h) Install the chain tensioner (See page EM–25).
(i) Recheck the valve clearance (See procedure in step 3).
(j) Check the valve timing (See page EM-25).

7. REINSTALL CYLINDER HEAD COVER
(See page EM-25)

IGNITION TIMING

EM15P-01

INSPECTION

1. WARM UP ENGINE

Allow the engine to warm up to normal operating temperature.

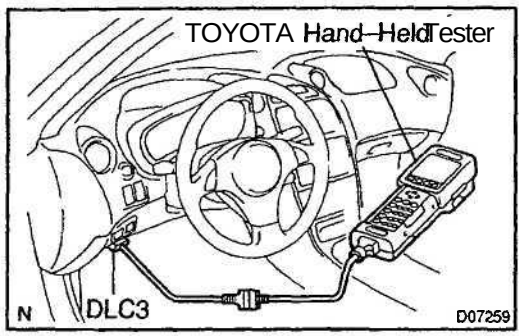

2. CONNECT TOYOTA HAND–HELD TESTER OR OBDII SCAN TOOL

(a) Connect the TOYOTA hand–held tester or OBDII scan tool to the DLC3.

(b) Please refer to the TOYOTA hand–held tester or OBDII scan tool operator's for further details.

3. CONNECT TIMING LIGHT TO ENGINE

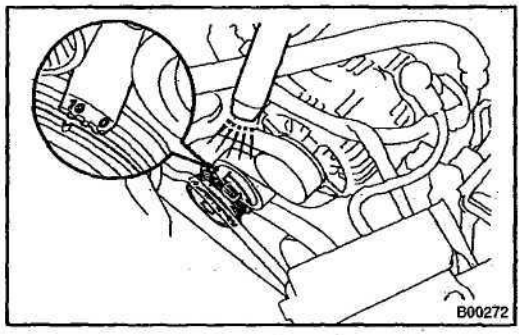

4. INSPECT IGNITION TIMING

Using a timing light, check the ignition timing.

Ignition timing:

1ZZ–FE:

10 – 18° BTDC @ idle

2ZZ–GE:

8 – 12° BTDC @ idle

(Transmission in neutral position)

HINT:

After engine rpm is kept at 1,000 - 1,300 rpm for 5 seconds, check that it returns to idle speed.

5. DISCONNECT TIMING LIGHT FROM ENGINE

6. DISCONNECT TOYOTA HAND–HELD TESTER OR OBDII SCAN TOOL

IDLE SPEED

EM05N–03

INSPECTION

1. INSTALL CONDITIONS

(a) Engine at normal operating temperature
(b) Air cleaner installed
(c) All pipes and hoses of air induction system connected
(d) All vacuum lines properly connected
(e) SFI system wiring connectors fully plugged
(f) All operating accessories switched OFF
(g) Ignition timing check correctly
(h) Transmission in neutral position
(i) Air conditioning switched OFF

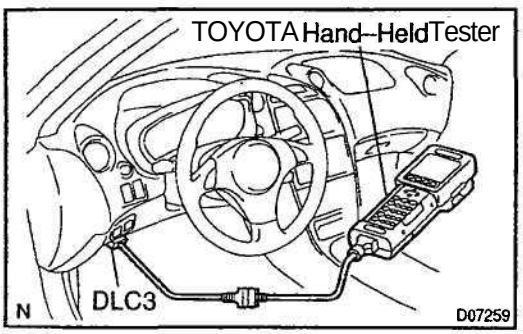

2. CONNECT TOYOTA HAND–HELD TESTER OR OBDII SCAN TOOL

(a) Connect the TOYOTA hand–held tester or OBDII scan tool to the DLC3.
(b) Please refer to the TOYOTA hand–held tester or OBDII scan tool operator's manual for further details.

3. INSPECT IDLE SPEED

(a) Race the engine at 2,500 rpm for approx. 90 seconds.
(b) Check the idle speed.

Idle speed (w/ Cooling fan OFF):
1ZZ–FE
M/T 700 ± 50 rpm
A/T 750 ± 50 rpm
2ZZ–GE
M/T 800 ± 50 rpm
A/T 750 ± 50 rpm

If the idle speed is not as specified, check the IAC valve and air intake system.

4. DISCONNECT TOYOTA HAND–HELD TESTER OR OBDII SCAN TOOL

TIMING CHAIN

COMPONENTS

EM15R-01

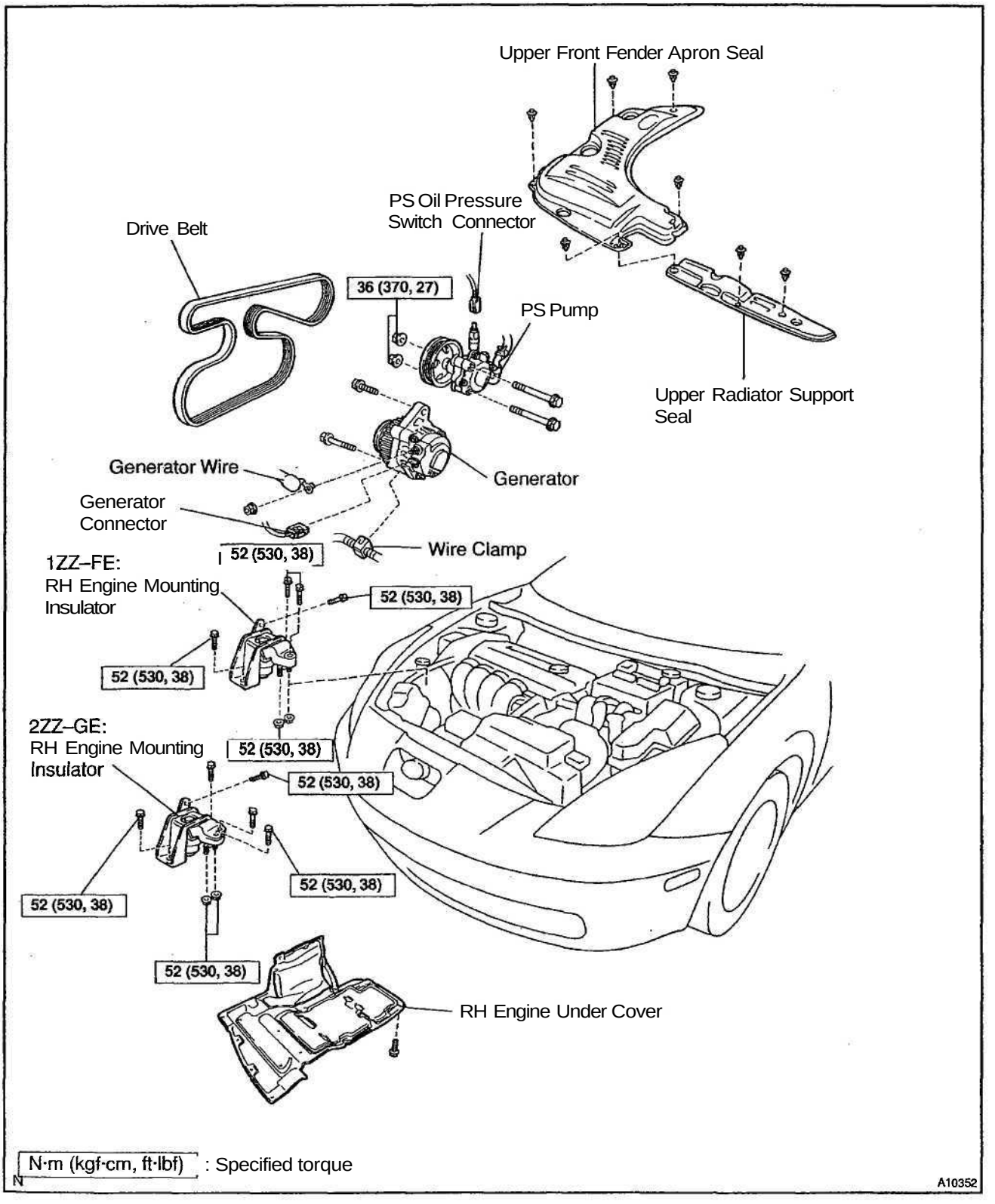

1ZZ-FE:

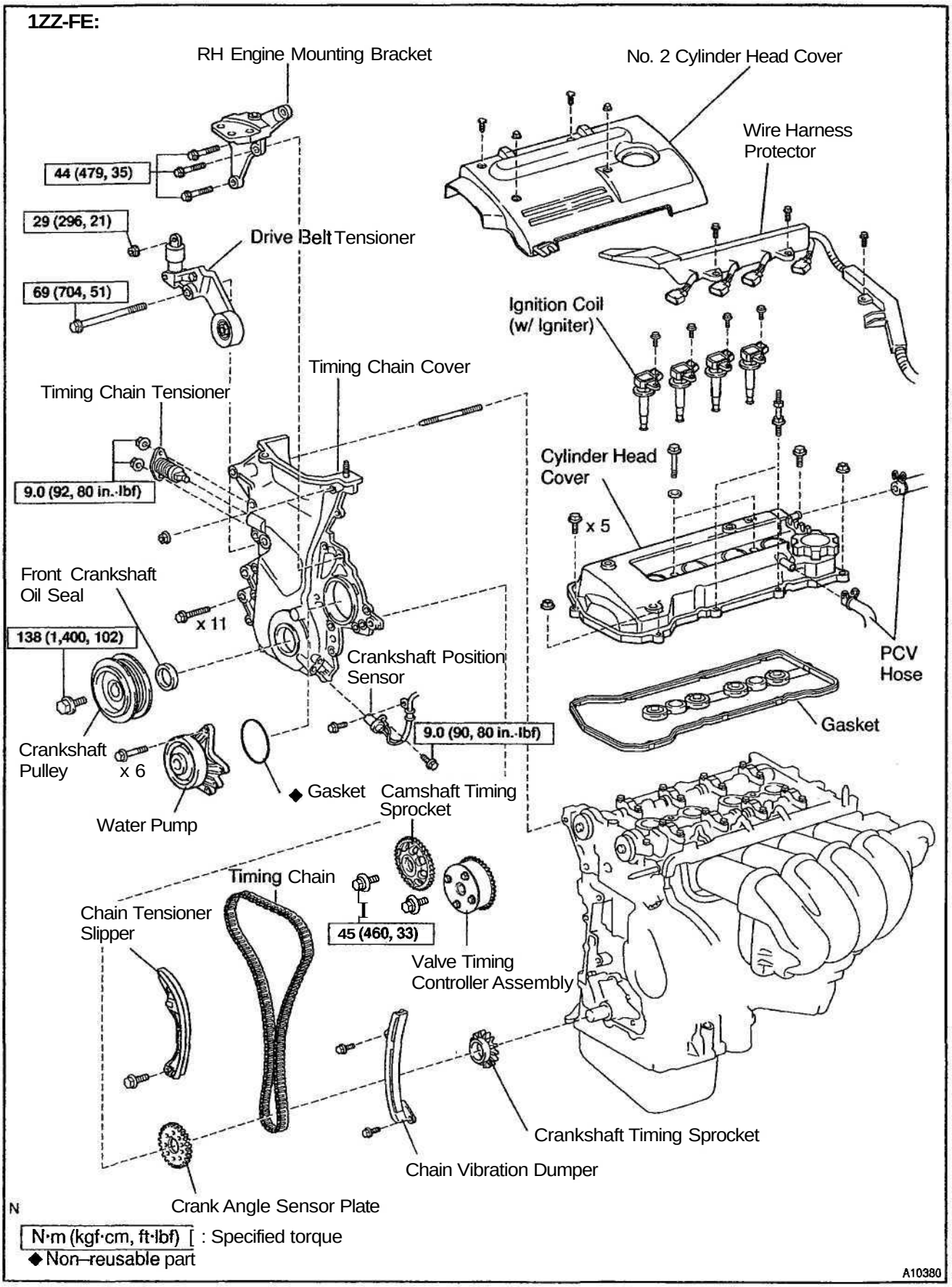
RH Engine Mounting Bracket
No. 2 Cylinder Head Cover
Wire Harness Protector
44 (479, 35)
29 (296, 21)
Drive Belt Tensioner
69 (704, 51)
Ignition Coil (w/ Igniter)
Timing Chain Cover
Timing Chain Tensioner
9.0 (92, 80 in.·lbf)
Cylinder Head Cover
x 5
Front Crankshaft Oil Seal
x 11
138 (1,400, 102)
Crankshaft Position Sensor
PCV Hose
9.0 (90, 80 in.·lbf)
Gasket
Crankshaft Pulley
x 6
◆ Gasket
Camshaft Timing Sprocket
Water Pump
Timing Chain
Chain Tensioner Slipper
45 (460, 33)
Valve Timing Controller Assembly
Crankshaft Timing Sprocket
Chain Vibration Dumper
Crank Angle Sensor Plate
N
N·m (kgf·cm, ft·lbf) [: Specified torque
◆ Non–reusable part
A10380

2ZZ-GE:

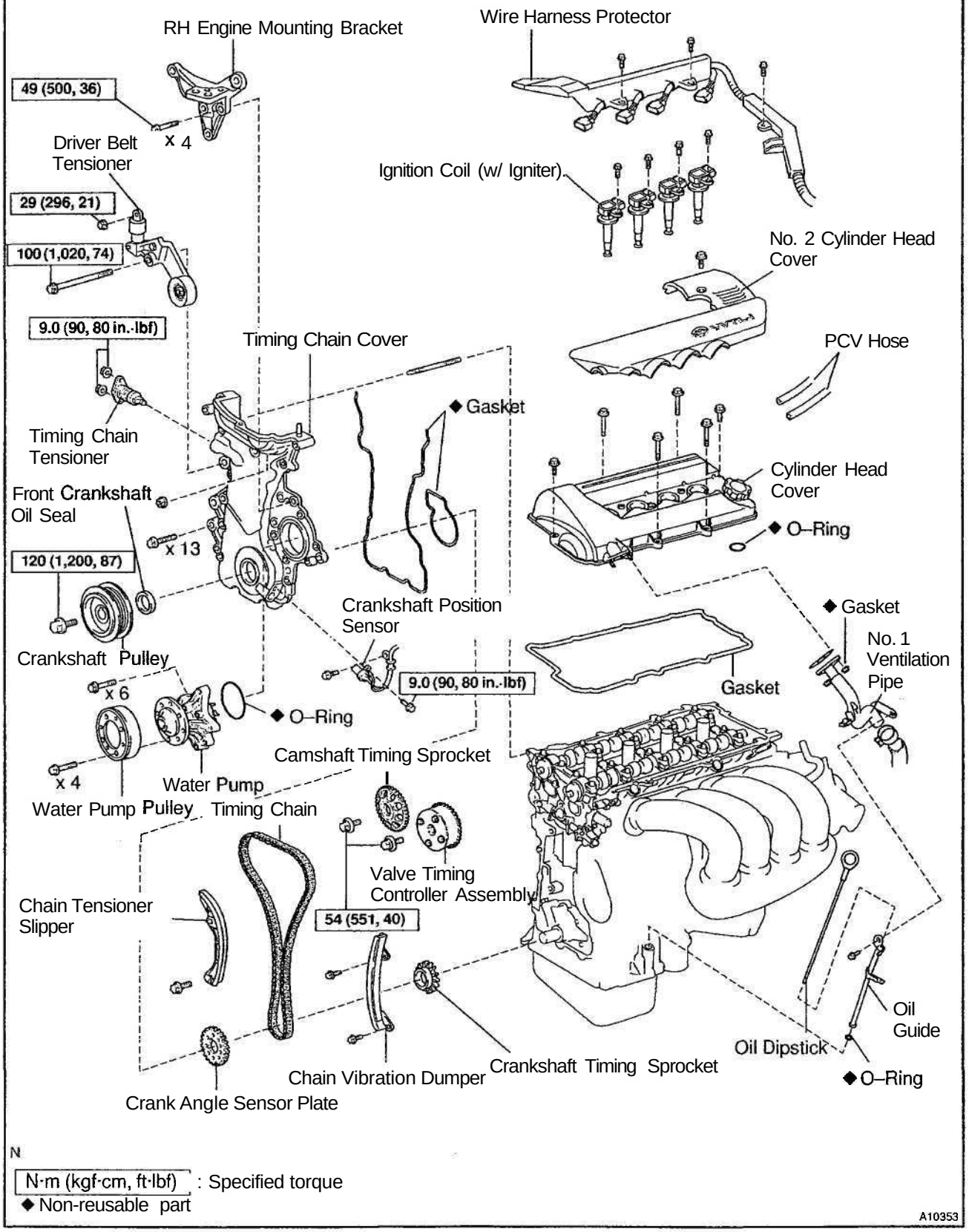

N

N·m (kgf·cm, ft·lbf) : Specified torque

◆ Non-reusable part

A10353

EM05P-05

REMOVAL

1. REMOVE UPPER FRONT FENDER APRON SEAL AND UPPER RADIATOR SUPPORT SEAL

2. DRAIN ENGINE COOLANT

3. REMOVE RH FRONT WHEEL

4. REMOVE RH ENGINE UNDER COVER

5. REMOVE DRIVE BELT AND GENERATOR

(See page CH–7)

6. DISCONNECT PS PUMP FROM ENGINE

(a) Disconnect the PS oil pressure switch connector.

(b) Remove the 2 nuts and through bolts, and disconnect the PS pump from the engine (See page SR–24).

HINT:

Put aside the pump and suspend it to the cowl with a string.

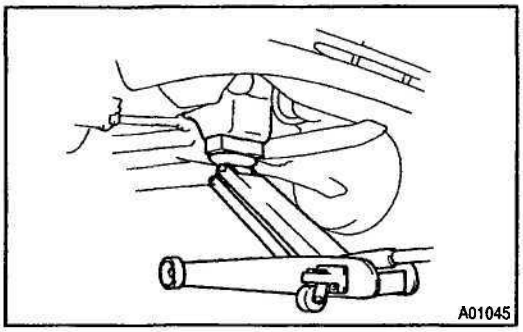

7. REMOVE RH ENGINE MOUNTING INSULATOR

(a) Set the jack to the engine.

HINT:

Place a wooden block between the jack and engine.

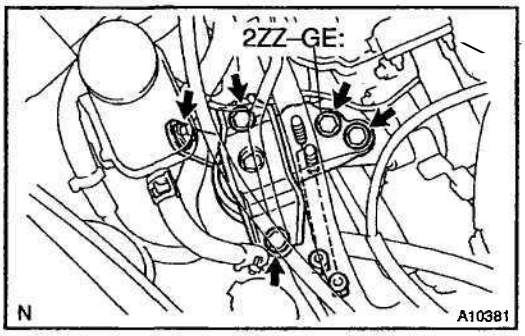

(b) 1ZZ-FE:

Remove the 4 bolts, 2 nuts and RH engine mounting insulator.

(c) 2ZZ–GE:

Remove the 5 bolts, 2 nuts and RH engine mounting insulator.

8. 1ZZ-FE:

REMOVE CYLINDER HEAD COVER

(a) Remove the 4 bolts and No. 2 cylinder head cover.

(b) Remove the 4 ignition coils (See page IG–6).

(c) Disconnect the 2 PCV hoses from the cylinder head.

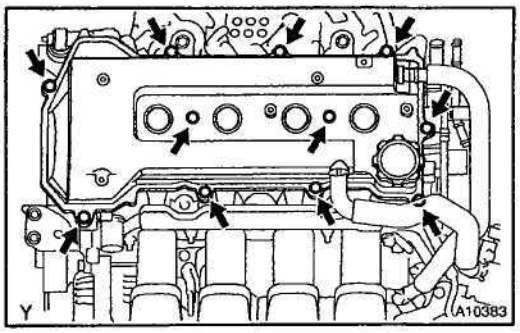

(d) Remove the 9 bolts, 2 seal washers, 2 nuts, cylinder head cover and gasket.

9. 2ZZ–GE:

REMOVE CYLINDER HEAD COVER

(a) Remove the 4 bolts and No. 2 cylinder head cover.
(b) Remove the ignition coils (See page IG–6).
(c) Disconnect the 2 PCV hoses from the cylinder head cover.

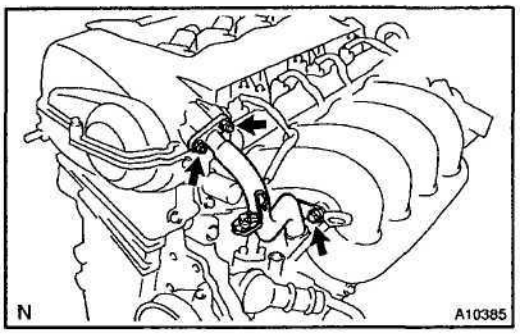

(d) Remove the 2 nuts, bolt and disconnect the No. 3 ventilation hose from the No. 1 ventilation pipe.
(e) Remove the No. 1 ventilation pipe and gasket.

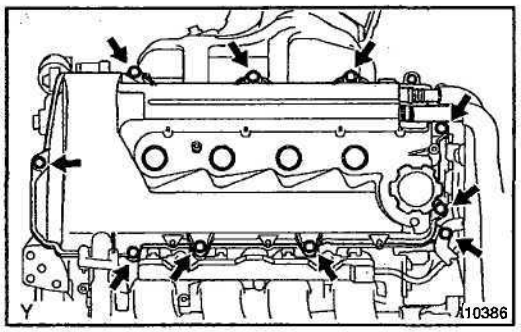

(f) Remove the 9 bolts, wire harness protector, cylinder head cover and gasket.
(g) Remove the O–ring from the cylinder head cover.

10. SET NO. 1 CYLINDER TO TDC/COMPRESSION

(a) Turn the crankshaft pulley, and align its groove with timing mark "0" of the timing chain cover.

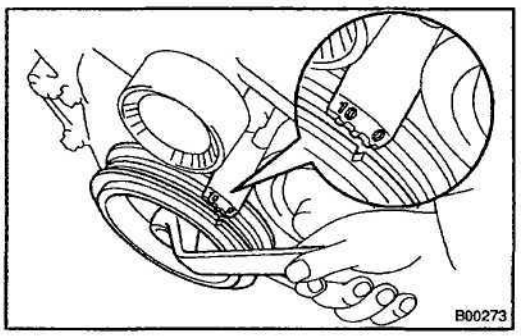

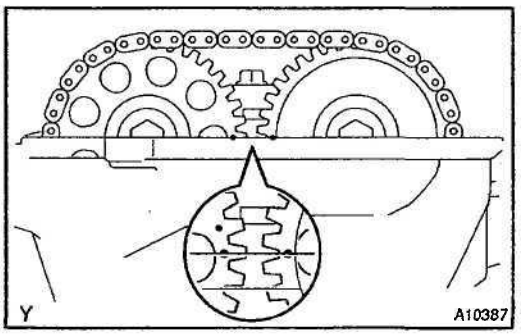

(b) Check that the point marks of the camshaft timing sprockets are in straight line on the timing chain cover surface as shown in the illustration.

If not, turn the crankshaft 1 revolution (360°) and align the marks as above.

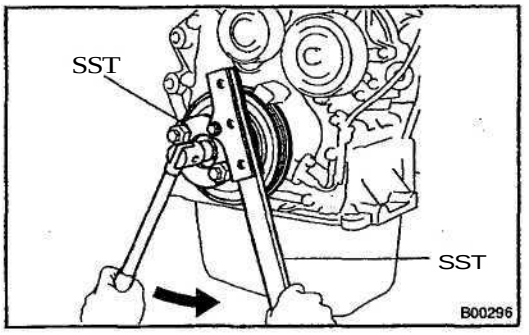

11. REMOVE CRANKSHAFT PULLEY

(a) Using SST and 2 nuts (width: 10 mm (0.25 in.)), remove the pulley bolt.
SST 09213–70010, 09330–00021

(b) Remove the crankshaft pulley.

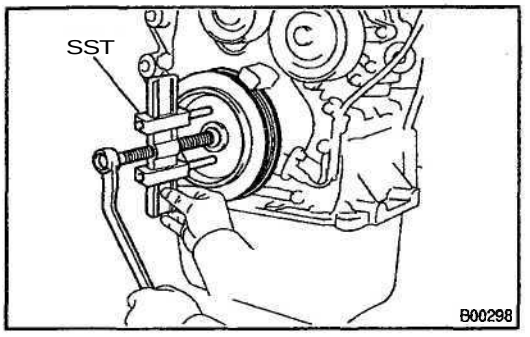

HINT:
If necessary, remove the pulley with SST.
SST 09950–50012 (09951–05010, 09952–05010, 09953–05020, 09954–05020)

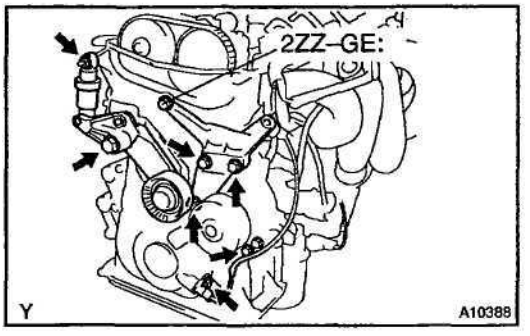

12. DISCONNECT CRANKSHAFT POSITION SENSOR FROM TIMING CHAIN COVER

Remove the 2 bolts and crankshaft position sensor.

13. REMOVE DRIVE BELT TENSIONER

Remove the bolt, nut and drive belt tensioner.

14. REMOVE RH ENGINE MOUNTING BRACKET

(a) 1ZZ-FE:
Remove the 3 bolts and mounting bracket.

(b) 2ZZ–GE:
Remove the 4 bolts and mounting bracket.

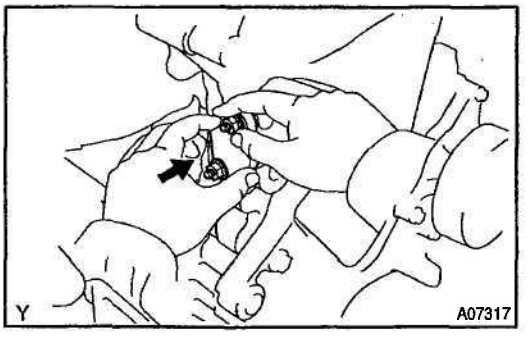

15. REMOVE CHAIN TENSIONER

Remove the 2 nuts and chain tensioner.

16. REMOVE WATER PUMP (See page CO–5)

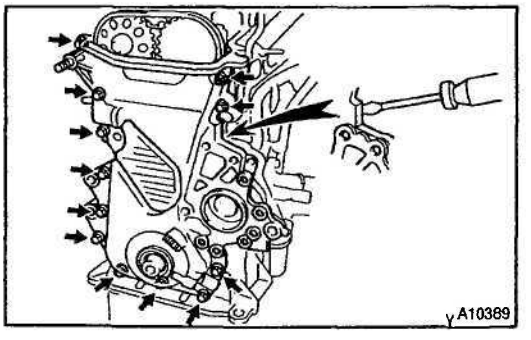

17. 1ZZ-FE:
REMOVE TIMING CHAIN COVER

(a) Remove the 11 bolts and nut.

(b) Using a torx wrench socket (E8), remove the stud bolt.

(c) Remove the timing chain cover by prying the portions between the cylinder head and cylinder block with a screwdriver.

NOTICE:

Be careful not to damage the contact surfaces of the timing chain cover, cylinder head and cylinder block.

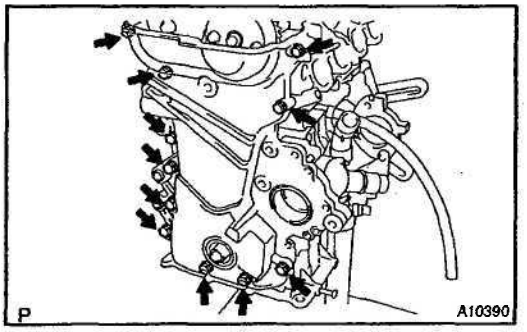

18. 2ZZ–GE:

REMOVE TIMING CHAIN COVER

(a) Remove the 12 bolts.

(b) Using a torx wrench socket (E8), remove the stud bolt.

(c) Remove the timing chain cover and 2 gaskets.

19. REMOVE CRANK ANGLE SENSOR PLATE

20. REMOVE CHAIN TENSIONER SLIPPER

Remove the bolt and slipper.

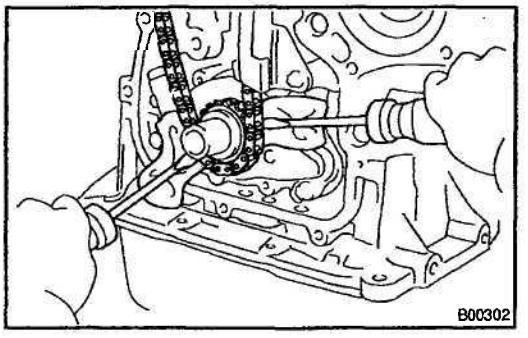

21. REMOVE TIMING CHAIN AND CRANKSHAFT TIMING SPROCKET

If the crankshaft timing sprocket cannot be removed by hand, use 2 screwdrivers.

NOTICE:

Position shop rags as shown to prevent damage.

22. REMOVE CHAIN VIBRATION DAMPER

Remove the 2 bolts and damper.

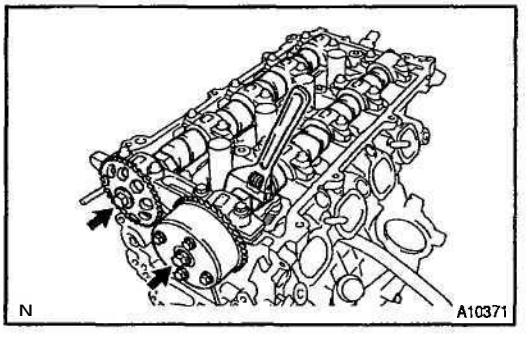

23. REMOVE VALVE TIMING CONTROL ASSEMBLY AND CAMSHAFT TIMING SPROCKET

Hold the hexagonal head wrench portion of the camshaft with a wrench, and remove the bolt, valve timing controller assembly and timing sprocket.

NOTICE:

- **Be careful not to damage the cylinder head and valve lifter with the wrench.**
- **Do not disassemble the valve timing controller assembly.**

EM05Q-04

INSPECTION

1. INSPECT TIMING CHAIN AND TIMING SPROCKETS

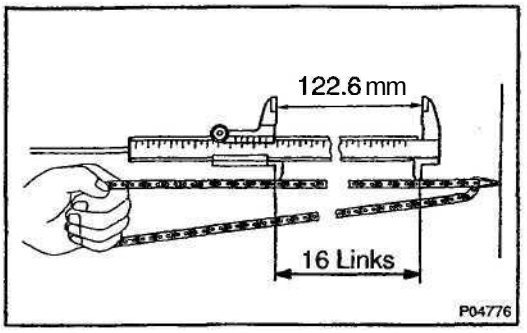

(a) Using a vernier calipers, measure the length of 16 links with the chain dully stretched.

Maximum chain elongation: 122.6 mm (4.827 in.)

If the elongation is greater than maximum, replace the chain.

HINT:

Make the same measurements pulling at 3 or more places selected at random.

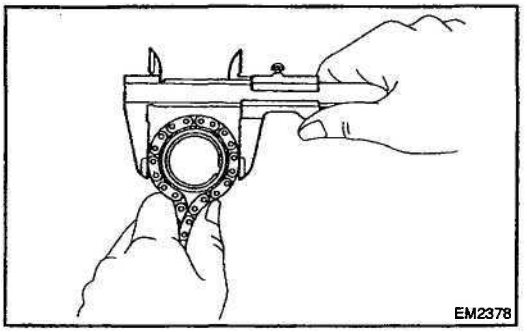

(b) Wrap the chain around the timing sprocket.

(c) Using a vernier calipers, measure the timing sprocket diameter with the chain.

NOTICE:

Vernier calipers must contact the chain rollers for measuring.

Minimum sprocket diameter (w/ Chain):

Camshaft 97.3 mm (3.831 in.)

Crankshaft 51.6 mm (2.031 in.)

If the diameter is less than minimum, replace the chain and sprockets.

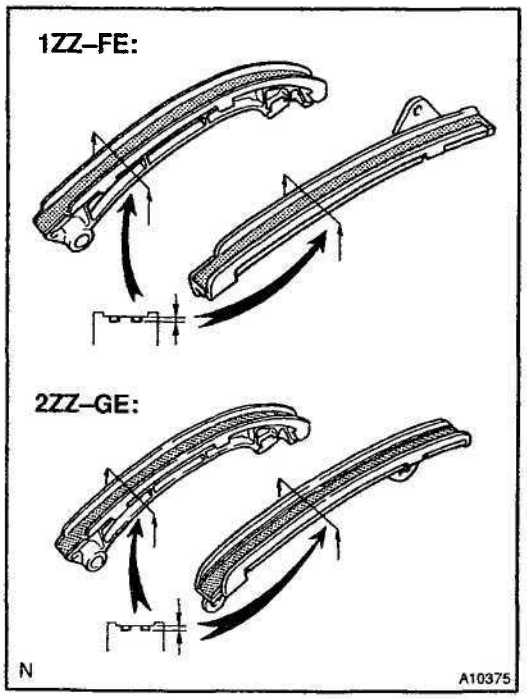

2. INSPECT CHAIN TENSIONER SLIPPER AND VIBRATION DAMPER

Measure the chain tensioner slipper and vibration damper wears.

Maximum wear: 1.0 mm (0.039 in.)

If the wear is greater than maximum, replace the slipper and/or damper.

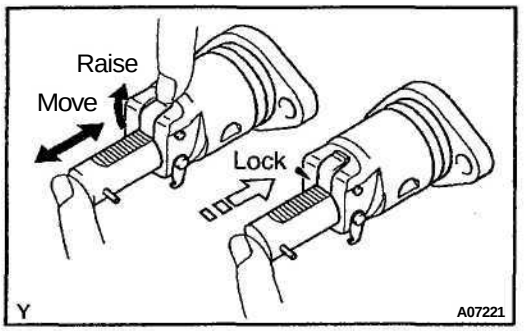

3. INSPECT CHAIN TENSIONER

(a) Check that the plunger moves smoothly when the ratchet pawl is raised with your finger.

(b) Release the ratchet pawl and check that the plunger is locked in place by the ratchet pawl and does not move when pushed with your finger.

4. INSPECT OIL JET (See page LU–11)

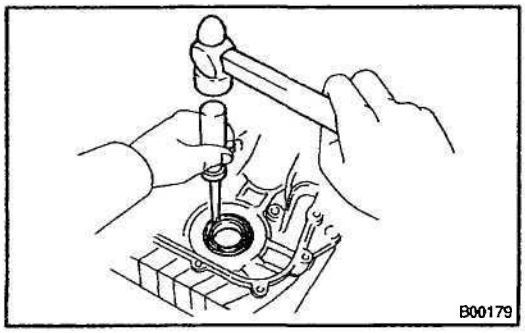

REPLACEMENT

HINT:
There are 2 methods (A and B) to replace the oil seal which are as follows:

REPLACE CRANKSHAFT FRONT OIL SEAL

(a) If timing chain cover is removed from cylinder block.
  (1) Using a screwdriver and a hammer, tap out the oil seal.

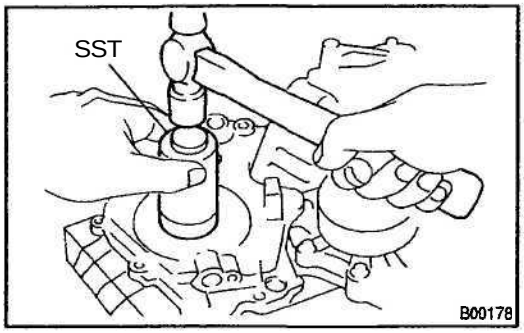

  (2) Using SST and a hammer, tap in a new oil seal until its surface is flush with the timing chain cover edge.
  SST 09309–37010
  (3) Apply MP grease to the oil seal lip.

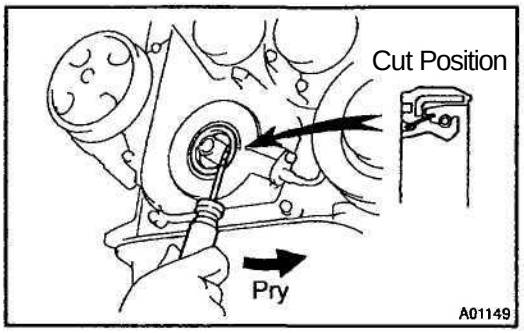

(b) If timing chain cover is installed to the cylinder block.
  (1) Using a knife, cut off the oil seal lip.
  (2) Using a screwdriver, pry out the oil seal.

NOTICE:
Be careful not to damage the crankshaft. Tape the screwdriver tip.

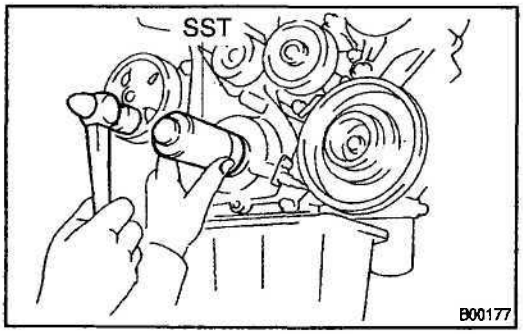

  (3) Using SST and a hammer, tap in the oil seal until its surface is flush with the timing chain cover edge.
  SST 09309–37010

EM15S-01

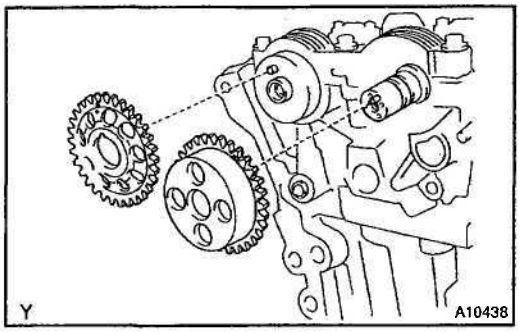

INSTALLATION

1. INSTALL VALVE TIMING CONTROLLER ASSEMBLY AND CAMSHAFT TIMING SPROCKET

(a) Apply engine oil in the range from the tip of the intake camshaft to 16 mm from that tip.

(b) Align the timing mark on the value timing controller assembly with the knock pin, and install the value timing controller assembly to the cam shaft.

NOTICE:

Do not push valve timing controller assembly to the camshaft forcibly when installing it.

(c) Align the knock pin hole in the cam shaft timing sprocket with the knock pin of the cam shaft, and exhaust the sprocket to the cam shaft.

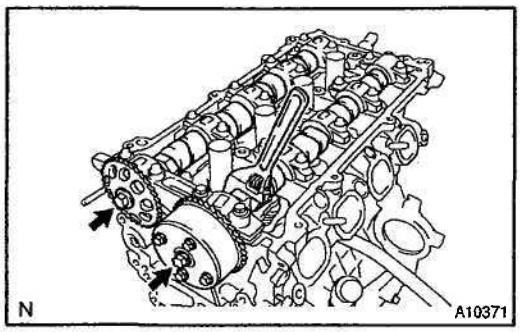

(d) Temporarily install the timing sprocket bolt.

(e) Hold the hexagon wrench head portion of the camshaft with a wrench, and tighten the timing sprocket bolt.

Torque:

1ZZ-FE 45 N·m (460 kgf cm, 33 ft·lbf)

2ZZ–GE 54 N·m (551 kgf cm, 40 ft·lbf)

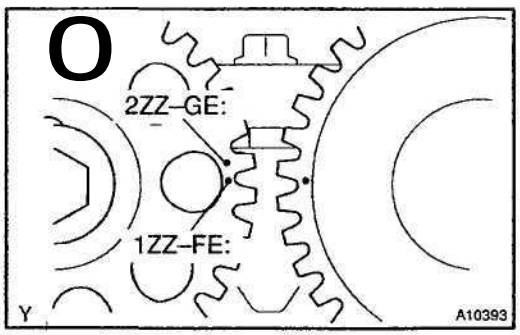

2. SET NO. 1 CYLINDER TO TDC/COMPRESSION

(a) Turn the hexagonal wrench head portion of the camshafts, and align the point marks of the camshaft timing sprockets.

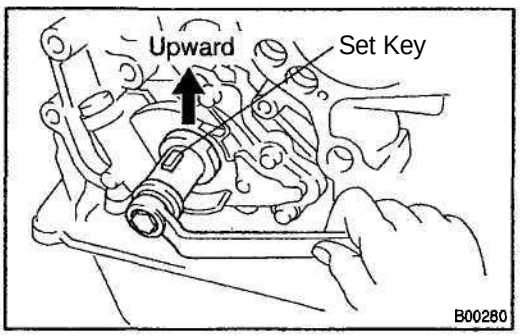

(b) Using a crankshaft pulley bolt, Turn the crankshaft and set the set key on the crankshaft upward.

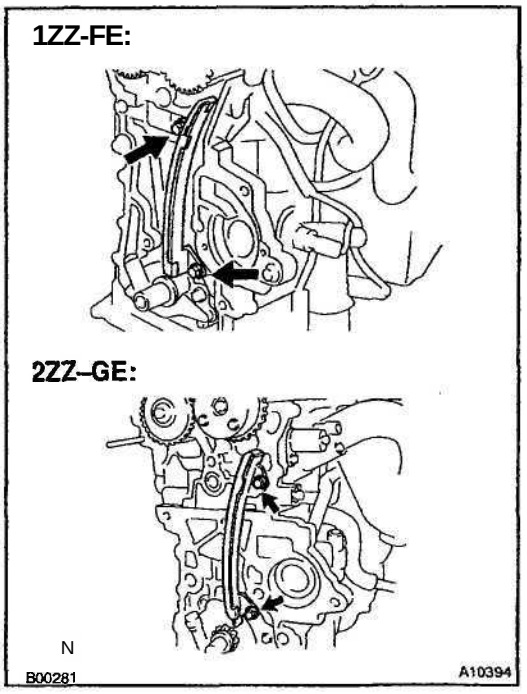

3. INSTALL CHAIN VIBRATION DAMPER

Install the damper with the 2 bolts.

Torque:

1ZZ-FE 11 N·m (113 kgf·cm, 8 ft·lbf)

2ZZ–GE 20.5 N·m (209 kgf·cm, 15 ft·lbf)

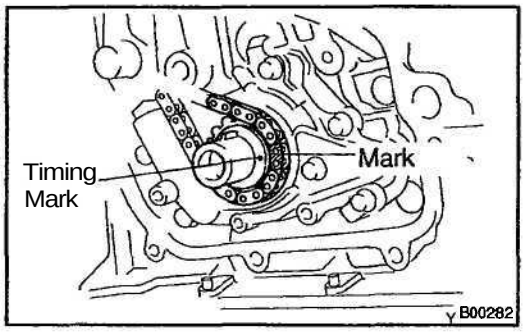

4. INSTALL TIMING CHAIN AND CRANKSHAFT TIMING SPROCKET

(a) Install the timing chain on the crankshaft timing sprocket with the yellow color link aligned with the timing mark on the crankshaft timing sprocket.

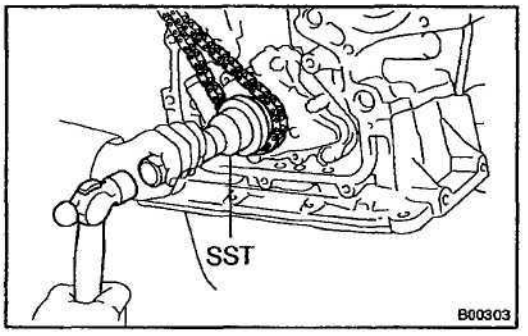

HINT:

If necessary, install the sprocket with SST.

SST 09223–22010

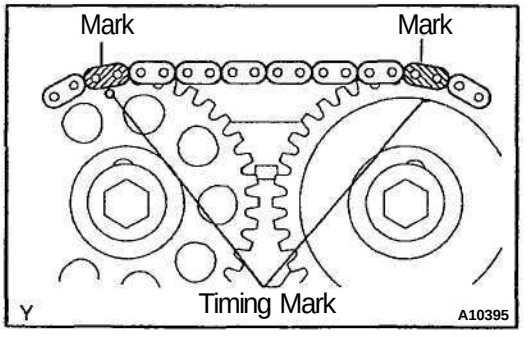

(b) 1ZZ-FE:

Install the timing chain on the camshaft timing sprockets with the yellow color links aligned with the timing marks on the camshaft timing sprockets.

(c) 2ZZ–GE:

Install the timing chain on the camshaft timing sprockets with the orange color links aligned with the timing marks on the camshaft timing sprockets.

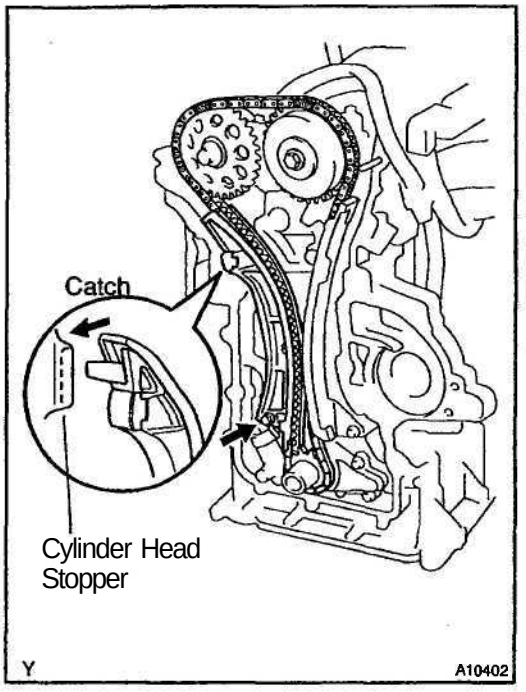

(d) Check that the tension between the intake camshaft timing sprocket and crankshaft timing sprocket.

5. INSTALL CHAIN TENSIONER SLIPPER

(a) Install the slipper with the bolt.

Torque:
1ZZ-FE 18.5 N·m (189 kgf·cm, 14 ft-lbf)
2ZZ–GE 20.5 N·m (209 kgf·cm, 15 ft·lbf)

(b) Check that the slipper moves is caught on the cylinder head stopper.

NOTICE:
DO not turn the crankshaft.

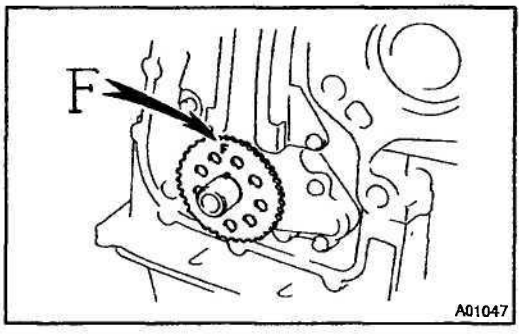

6. INSTALL CRANK ANGLE SENSOR PLATE

Install the plate with the "F" mark facing forward.

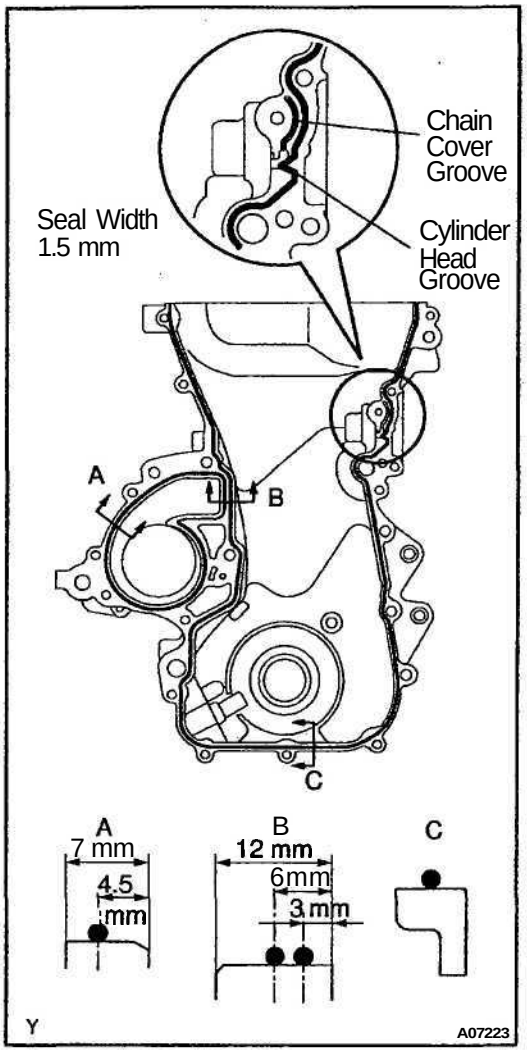

7. 1ZZ–FE:

INSTALL TIMING CHAIN COVER AND WATER PUMP

(a) Remove any old packing (FIPG) material and be careful not to drop any oil on the contact surfaces of the timing chain cover, cylinder head and Cylinder block.

- Using a razor blade and a gasket scraper, remove all the old packing (FIPG) material from the gasket surfaces and sealing grooves.
- Thoroughly clean all components to remove all the loose material.
- Using a non–residue solvent, clean both sealing surfaces.

(b) Apply seal packing to the timing chain cover as shown in the illustration.

Seal packing:

Part No. 08826 – 00100 or equivalent

- Install a nozzle that has been cut to a 1.5 mm (0.16 - 0.20 in.) opening.

HINT:

Avoid applying an excessive amount to the surface.

- Parts must be assembled within 3 minutes of application. Otherwise the material must be removed and reapplied.
- Immediately remove nozzle from the tube and reinstall cap.

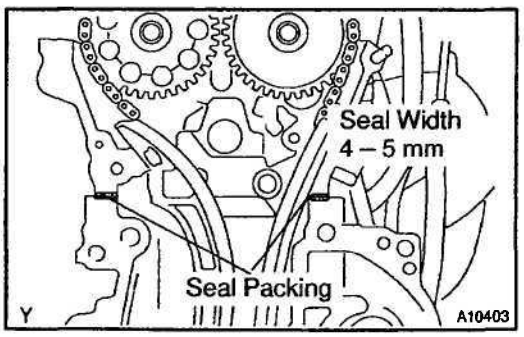

(c) Apply seal packing to 2 locations as shown in the illustration.

Seal packing:

Part No. 08826 - 00080 or equivalent

- Install a nozzle that has been cut to a 1.5 mm (0.16 - 0.20 in.) opening.

HINT:

Avoid applying an excessive amount to the surface.

- Parts must be assembled within 3 minutes of application. Otherwise the material must be removed and reapplied.
- Immediately remove nozzle from the tube and reinstall cap.

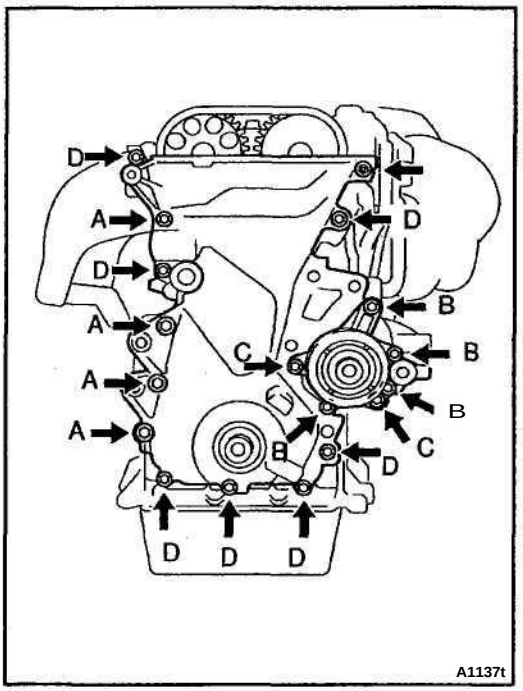

(d) Install the timing chain cover, O–ring and water pump with the 17 bolts and nut. Uniformly tighten the bolts and nut in several passes.

Torque:
10 mm head:
9 N·m (92 kgf·cm, 80 in.·lbf) for C
13 N·m (133 kgf·cm, 10 ft·lbf) for A
11 N·m (113 kgf·cm, 8 ft·lbf) for others
12 mm head:
18.5 N·m (189 kgf·cm, 14 ft·lbf)

NOTICE:

- **Pay attention not to wrap the chain and slipper over the chain cover seal line.**
- **After installing the chain cover, must install the mounting bracket and water pump within 15 minutes.**

HINT:

Each bolt length in indicated in the illustration.

A 45 mm (1.77 in.)
B 35 mm (1.38 in.)
C 30 mm (1.18 in.)
D 25 mm (0.98 in.)

(e) Using a torx wench socket (E8), install the stud bolt.
Torque: 9.3 N·m (95 kgf·cm, 82 in.·lbf)

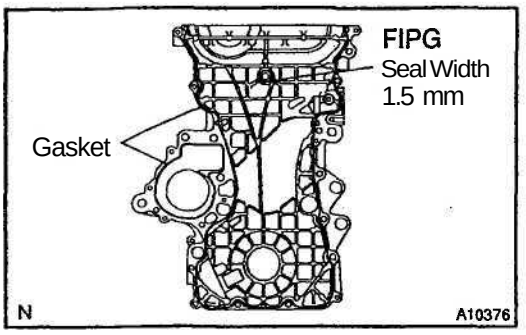

8. 2ZZ–GE:

INSTALL TIMING CHAIN COVER AND WATER PUMP

(a) Remove any old packing (FIPG) material and be careful not to drop any oil on the contact surfaces of the timing chain cover, cylinder head and cylinder block.

- Using a razor blade and a gasket scraper, remove all the old packing (FIPG) material from the gasket surfaces and sealing grooves.
- Thoroughly clean all components to remove all the loose material.
- Using a non–residue solvent, clean both sealing surfaces.

(b) Apply seal packing to the timing chain cover as shown in the illustration.

Seal packing:

Part No. 08826–00100 or equivalent

- Install a nozzle that has been cut to a 1.5 mm opening.

HINT:

Avoid applying an excessive amount to the surface.

- Parts must be assembled within 3 minutes of application. Otherwise the material must be removed and reapplied.
- Immediately remove nozzle from the tube and reinstall cap.

(c) Install the 2 gasket to the timing chain cover as shown in the illustration.

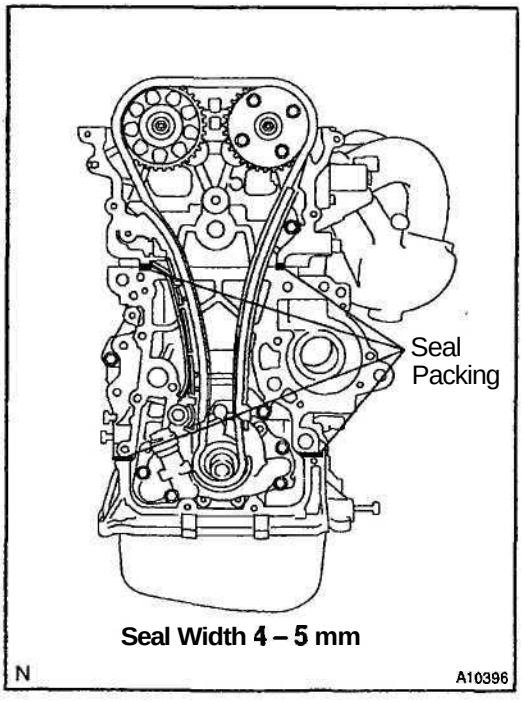

(d) Apply seal packing to 4 locations as shown in the illustration.

Seal packing:

Part No. 08826–00080 or equivalent

- Install a nozzle that has been cut to a 4 – 5 mm (0.16 - 0.20 in.) opening.

HINT:

Avoid applying an excessive amount to the surface.

- Parts must be assembled within 3 minutes of application. Otherwise the material must be removed and reapplied.
- Immediately remove nozzle from the tube and reinstall cap.

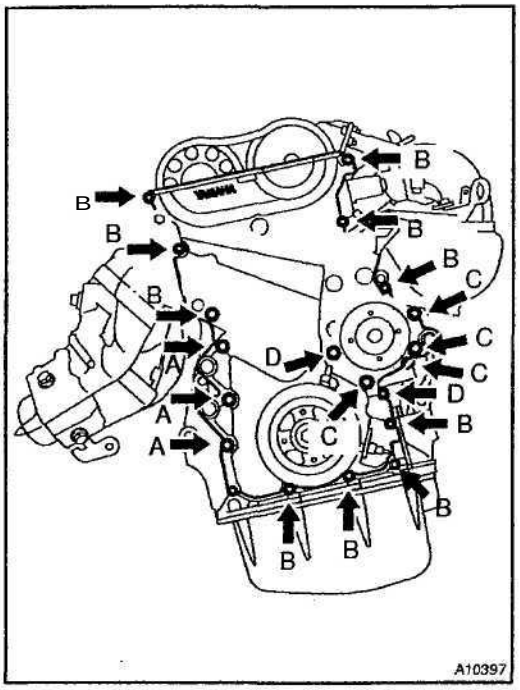

(e) Install the timing chain cover, O–ring and water pump with the 19 bolts. Uniformly tighten the bolts in several passes.
Torque:
A: 21 N·m (214 kgf·cm, 15 ft·lbf)
B: 11 N·m (113 kgf·cm, 8 tt-lbf)
C: 9.0 N·m (92 kgf-cm, 80 in.·lbf)
D: 9.0 N·m (92 kgf-cm, 80 in.·lbf)

NOTICE:

- **Pay attention not to wrap the chain and slipper over the chain cover seal line.**
- **After install the chain cover, must install the mounting bracket and water pump within 15 minutes.**

(f) Using a torx wrench socket (E8), install the stud bolt.
Torque: 9.3 N·m (95 kgf·cm, 82 in.·lbf)

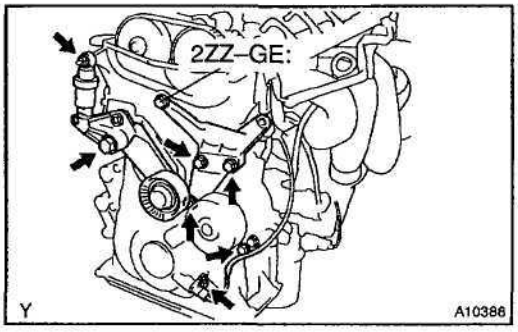

9. 1ZZ-FE:
INSTALL RH ENGINE MOUNTING BRACKET

(a) Apply seal packing to threads of the mounting bolt.
Seal packing:
Part No. 08826 - 00080 or equivalent

HINT:
Do not apply seal packing to 2 or 3 threads of the bolt end.

(b) Install the mounting bracket with the 3 bolts.
Torque: 47 N·m (479 kgf·cm, 35 tt-lbf)

10. 2ZZ–GE:
INSTALL RH ENGINE MOUNTING BRACKET

Install the mounting bracket with the 4 bolts.
Torque: 49 N·m (500 kgf·cm, 36 ft-Jbf)

11. INSTALL DRIVE BELT TENSIONER

(a) Check the appearance before installing the drive belt tensioner.

If in case of having the oil leakage, crack, and etc., replace the drive belt tensioner.

(b) Install the drive belt tensioner.
Torque:
Bolt
1ZZ-FE 69 N·m (704 kgf·cm, 51 ft·lbf)
2ZZ-GE 100 N·m (1,020 kgf·cm, 74 ft-lbf)
Nut 29 N·m (296 kgf·cm, 21 ft·lbf)

(c) Hook the tool on the hexagonal portion of the drive belt tensioner bracket and operate drive belt tensioner 3 times with full stroke.

HINT:
Take 3 seconds or more for 1 full stroke.

12. INSTALL CRANKSHAFT POSITION SENSOR
Torque: 9.0 N·m (92 kgf·cm, 80 in.·lbf)

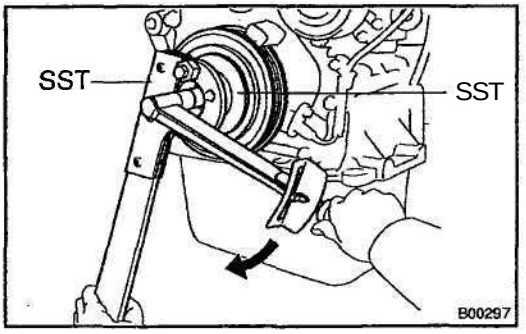

13. INSTALL CRANKSHAFT PULLEY
(a) Clean the crankshaft pulley inside.
(b) Align the pulley set key with the key groove of the pulley, and slide on the pulley.
(c) Using SST and 2 nuts (width: 10 mm (0.25 in.), install the pulley bolt.
SST 09213–70010, 09330–00021
Torque:
1ZZ-FE 138 N·m (1,409 kgf-cm, 102 ft·lbf)
2ZZ–GE 120 N·m (1,200 kgf·cm, 87 ft·lbf)

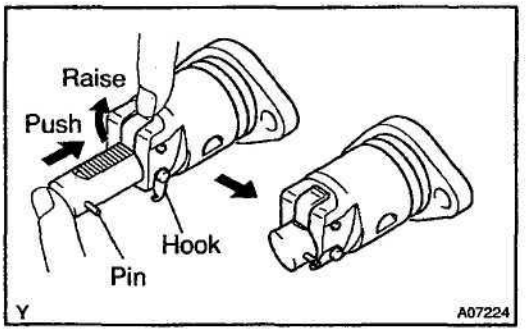

14. INSTALL CHAIN TENSIONER
(a) Check the chain tensioner.
(See page EM–16)
(b) Release the ratchet pawl, fully push in the plunger and apply the hook to the pin so that the plunger cannot spring out.

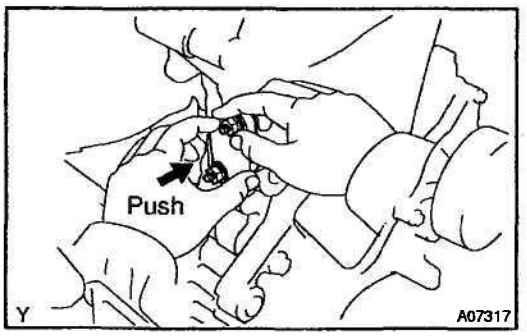

(c) Insert the O–ring with your hand until it reaches to the chamfering position and install nut temporally. Then, by tightening the nut, insert the chain tensioner to the installation position.

HINT:
- In the case that the hook is released while pushing in, apply the hook again and push the tensioner in.
- Pay attention not to catch the O–ring as it is built in the chain tensioner previously.

(d) Tighten the 2 nuts.
Torque: 9.0 N·m (92 kgf·cm, 80 in.·lbf)

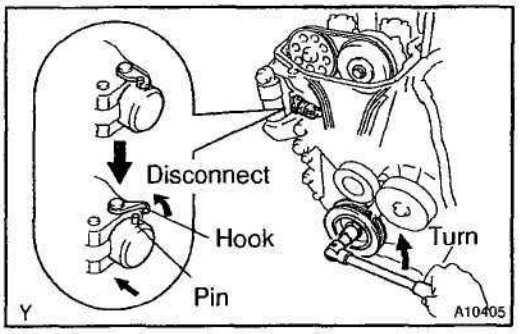

15. SET CHAIN TENSION

(a) Turn the crankshaft counterclockwise, and disconnect the plunger knock pin from the hook.

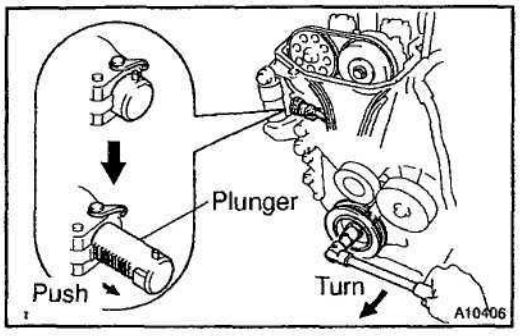

(b) Turn the crankshaft clockwise, and check that the slipper is pushed by the plunger.

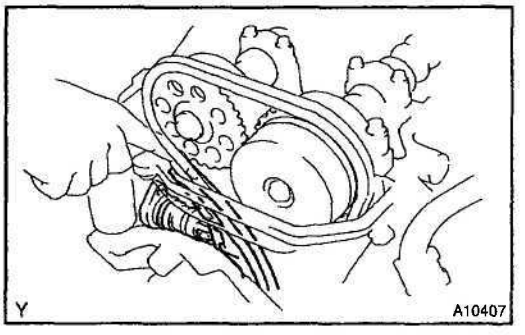

HINT:

If the plunger does not spring out, press the slipper into the chain tensioner with a screwdriver or your finger so that the hook is released from the knock pin and the plunger springs out.

16. CHECK VALVE TIMING

(a) Turn the crankshaft pulley, and align its groove with timing mark "0" of the timing chain cover.

NOTICE:

Always turn the crankshaft clockwise.

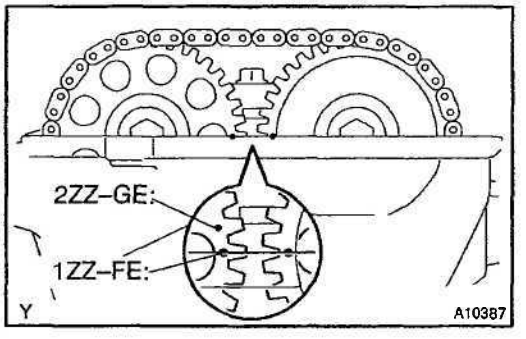

(b) Check that the point marks of the camshaft timing sprockets are in straight line on the timing chain cover surface as shown in the illustration.

If not, turn the crankshaft 1 revolution (360°) and align the marks as above.

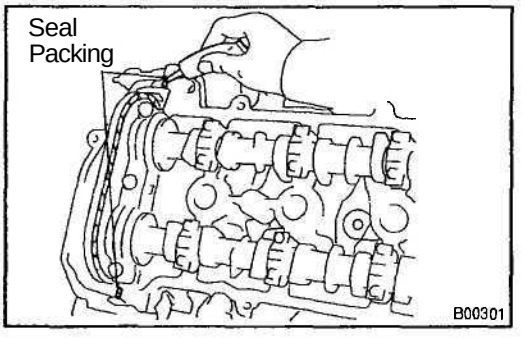

17. 1ZZ-FE:

INSTALL CYLINDER HEAD COVER

(a) Remove any old packing (FIPG) material.

(b) Apply seal packing to 2 locations as shown in the illustration.

Seal packing:

Part No. 08826 - 00080 or equivalent

(c) Install the gasket to the cylinder head cover.

HINT:

Part must be assembled within 3 minutes of application. Otherwise the material must be remove and reapplied.

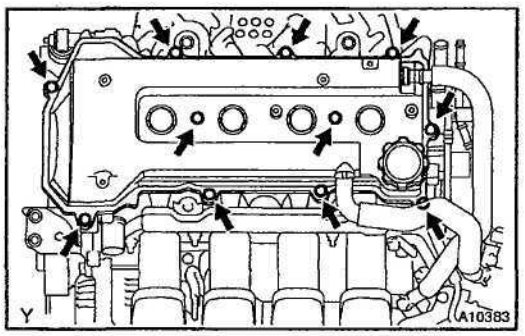

(d) Install the cylinder head cover with the 9 bolts, 2 seal washers and 2 nuts.

Uniformly tighten the bolts and nuts, in the several passes, in the sequence shown.

Torque:

w/o washer

11 N·m (113 kgf·cm, 8 ft·lbf)

w/ washer

9.0 N·m (92 kgf·cm, 80 in.·lbf)

(e) Connect the 2 PCV hoses to the cylinder head cover.

(f) Install the ignition coil (See page IG–7).

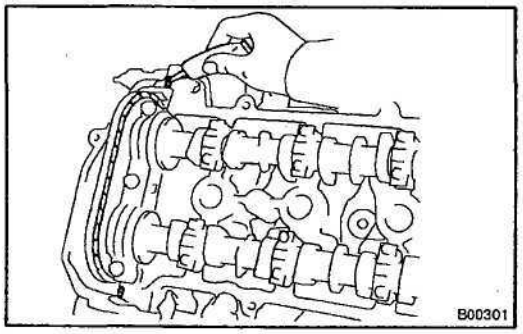

18. 2ZZ–GE:

INSTALL CYLINDER HEAD COVER

(a) Remove any old packing (FIPG) material.

HINT:

When FIPG on the head cover gasket side cannot be eliminated completely, replace the gasket.

(b) Apply seal packing to 2 locations as shown in the illustration.

Seal packing:

Part No. 08826–00080 or equivalent

(c) Install the gasket to the cylinder head cover.

HINT:

Part must be assembled within 3 minutes of application. Otherwise the material must be remove and reapplied.

(d) Install a new O-ring to the cylinder head cover.

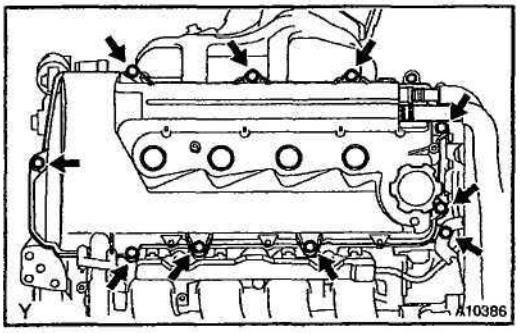

(e) Install the cylinder head cover and wire harness protector with the9 bolts. Uniformly tighten the bolts, in the several passes, in the sequence shown.
Torque: 10 N·m (100 kgf·cm, 7 ft·lbf)

(0 Connect the 2 PCV hoses to the cylinder head cover.

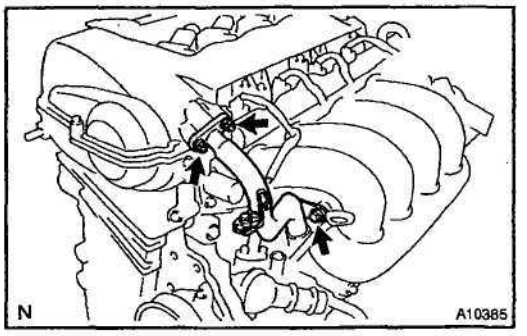

(g) Install a new gasket and No. 1 ventilation pipe with 2 nuts and bolt.
Torque:
Nut 10 N·m (100 kgf·cm, 7 ft·lbf)
Bolt 25 N·m (255 kgf·cm, 18 ft·lbf)

(h) Connect the No. 3 ventilation hose to the No. 1 ventilation Pipe-

(i) Install the ignition coil (See page IG–7).

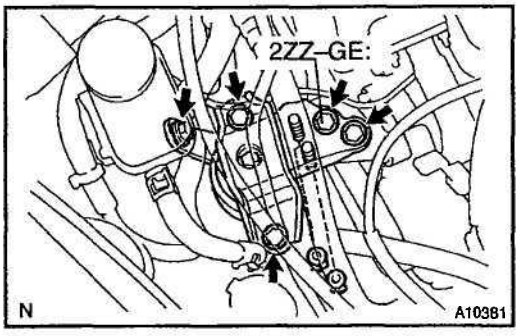

19. INSTALL RH ENGINE MOUNTING INSULATOR

(a) 1ZZ-FE:
Install the RH engine mounting insulator with the 4 bolts and 2 nuts.
Torque: 52 N·m (530 kgf·cm, 38 ft·lbf)

(b) 2ZZ–GE:
Install the RH engine mounting insulator with the 5 bolts and 2 nuts.
Torque: 52 N·m (530 kgf·cm, 38 ft·lbf)

20. INSTALL PS PUMP

(a) Install the PS pump with the 2 through bolts and nuts.
Torque: 36 N·m (370 kgf·cm, 27 ft·lbf)

(b) Install the PS pump pulley with the pulley nut.

(c) Connect the PS oil pressure switch connector.

21. INSTALL GENERATOR AND DRIVE BELT (See page CH–17)

22. INSTALL RH ENGINE UNDER COVER

23. INSTALL RH FRONT WHEEL

24. FILL WITH ENGINE COOLANT (See page CO–2)

25. INSTALL FRONT FENDER APRON SEAL AND UPPER RADIATOR SUPPORT SEAL

26. START ENGINE AND CHECK FOR COOLANT LEAKS

CYLINDER HEAD

COMPONENTS

EM15T-01

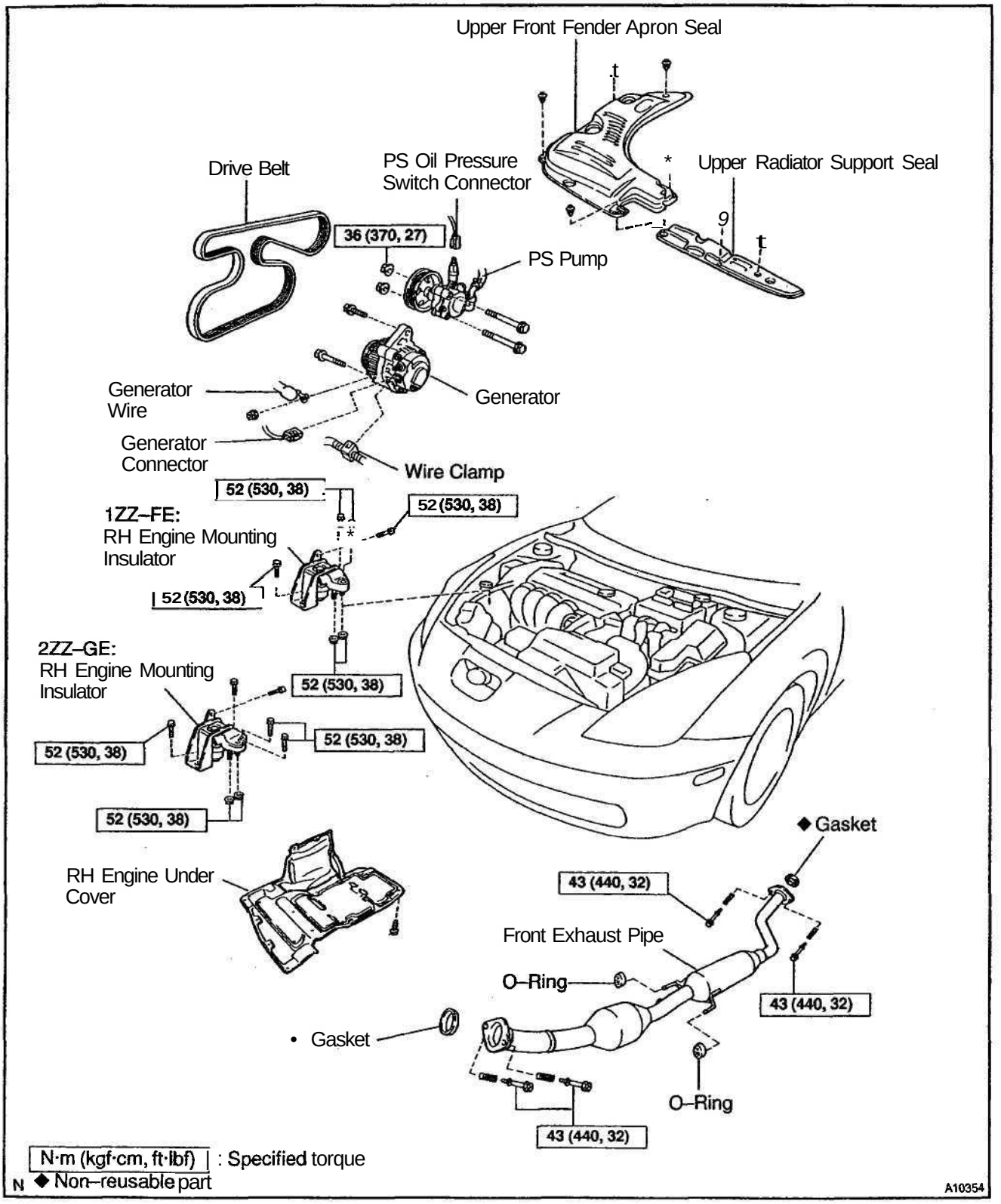

1ZZ-FE:

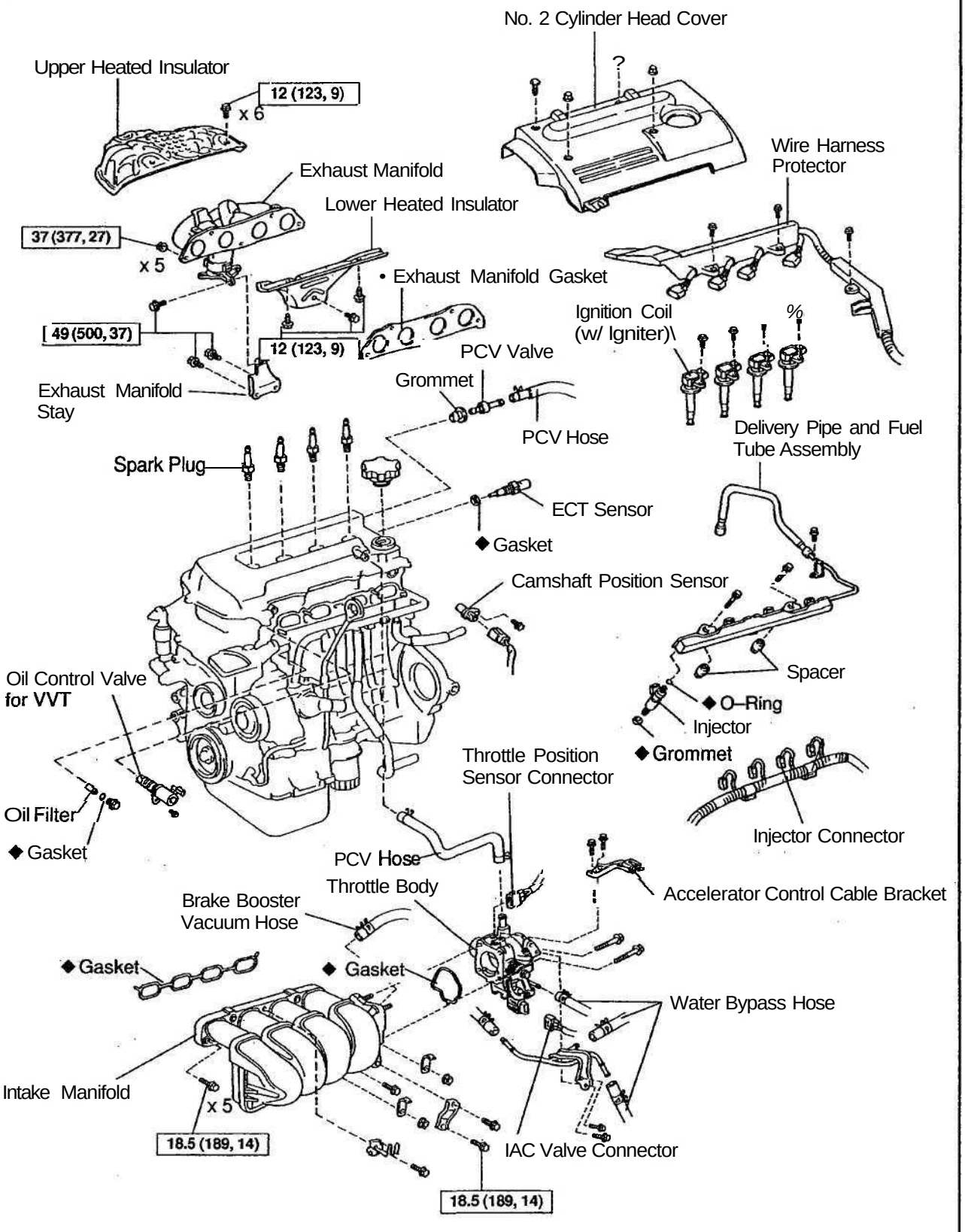

N·m (kgf·cm, ft·lbf) : Specified torque

N ◆ Non–reusable part

A10355

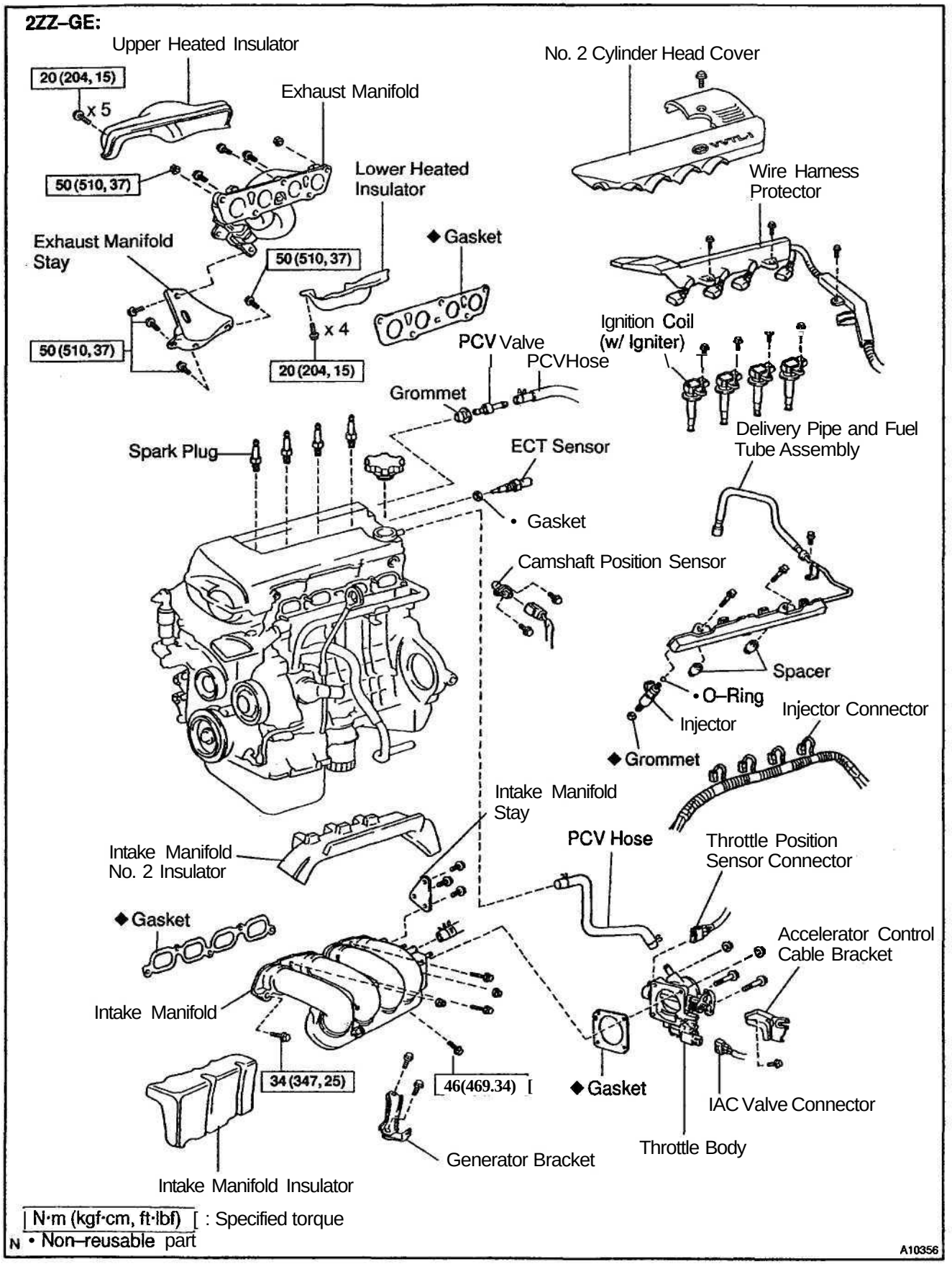
2ZZ–GE:
Upper Heated Insulator
20 (204, 15)
x 5
Exhaust Manifold
No. 2 Cylinder Head Cover
50 (510, 37)
Lower Heated Insulator
Wire Harness Protector
Exhaust Manifold Stay
◆ Gasket
50 (510, 37)
50 (510, 37)
x 4
20 (204, 15)
Ignition Coil (w/ Igniter)
PCV Valve
PCV Hose
Grommet
Delivery Pipe and Fuel Tube Assembly
Spark Plug
ECT Sensor
• Gasket
Camshaft Position Sensor
Spacer
• O–Ring
Injector
Injector Connector
◆ Grommet
Intake Manifold Stay
PCV Hose
Throttle Position Sensor Connector
Intake Manifold No. 2 Insulator
◆ Gasket
Accelerator Control Cable Bracket
Intake Manifold
34 (347, 25)
46(469.34) [
◆ Gasket
IAC Valve Connector
Throttle Body
Generator Bracket
Intake Manifold Insulator
N·m (kgf·cm, ft·lbf) [: Specified torque
N • Non–reusable part
A10356

1ZZ-FE:

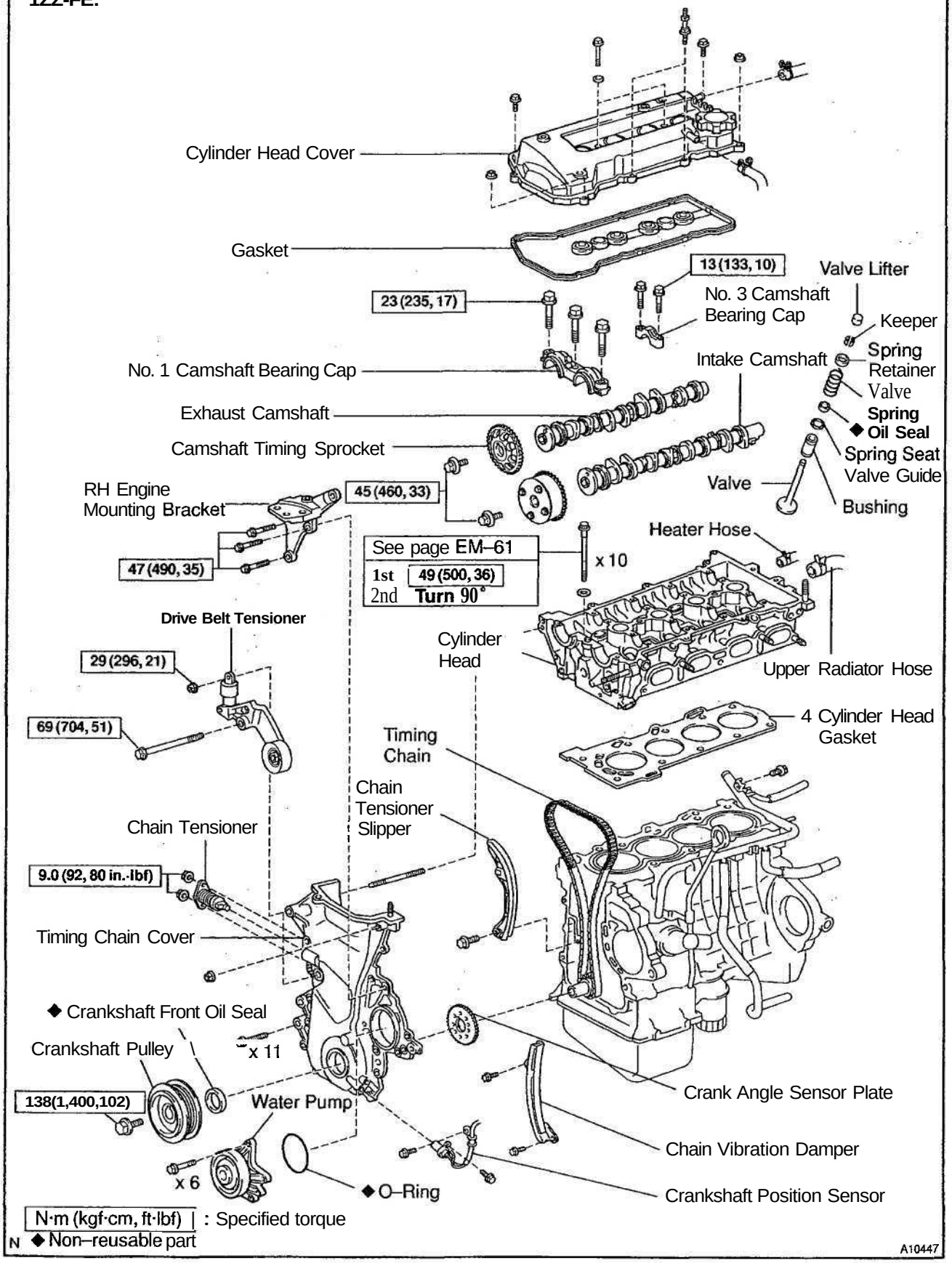

N·m (kgf·cm, ft·lbf) : Specified torque

N ◆ Non–reusable part

A10447

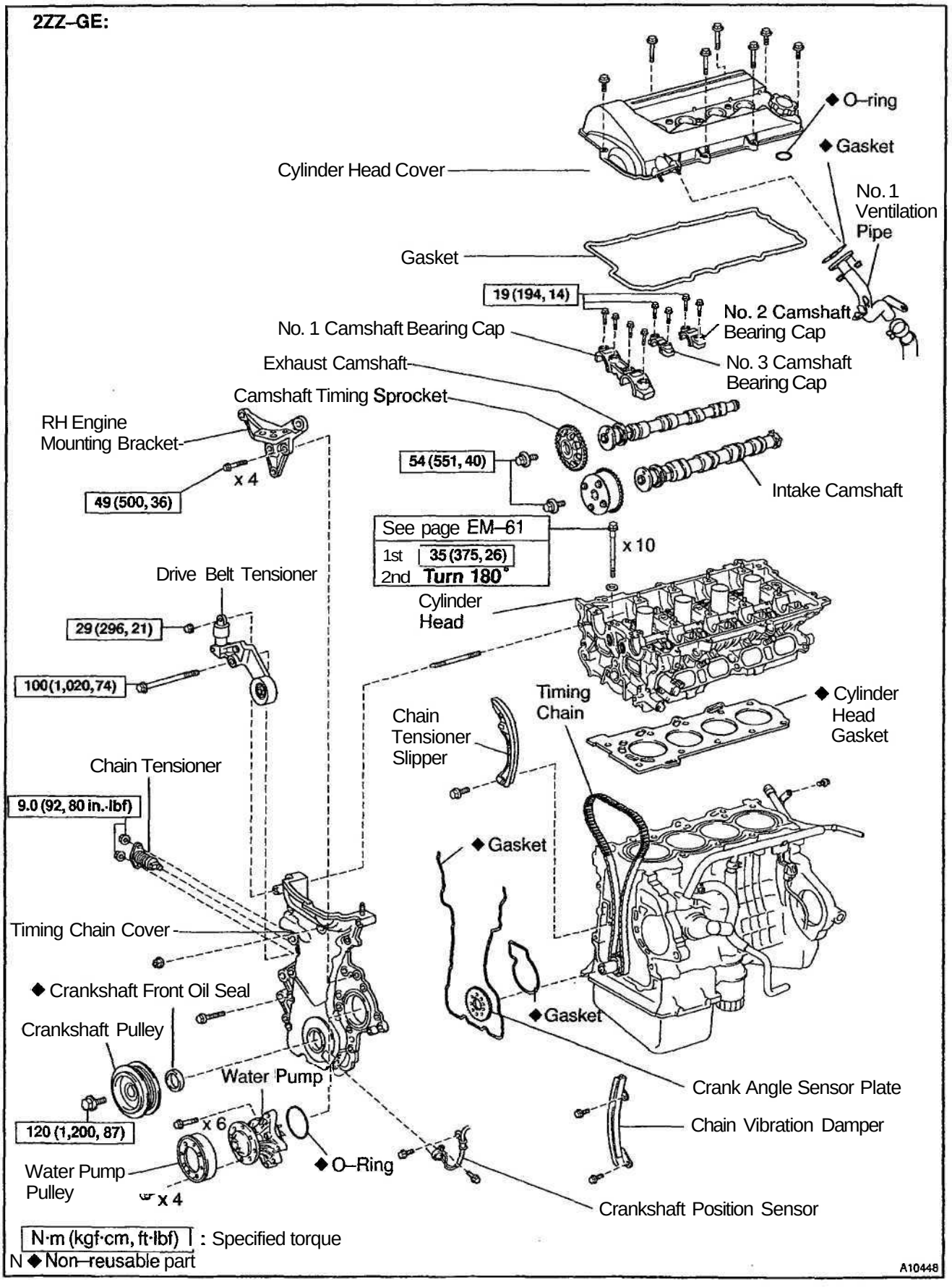
2ZZ–GE:
◆ O–ring
◆ Gasket
Cylinder Head Cover
No. 1 Ventilation Pipe
Gasket
19 (194, 14)
No. 2 Camshaft Bearing Cap
No. 1 Camshaft Bearing Cap
No. 3 Camshaft Bearing Cap
Exhaust Camshaft
Camshaft Timing Sprocket
RH Engine Mounting Bracket
x 4
49 (500, 36)
54 (551, 40)
Intake Camshaft
See page EM–61
1st 35 (375, 26)
2nd Turn 180°
x 10
Drive Belt Tensioner
29 (296, 21)
100 (1,020, 74)
Cylinder Head
Timing Chain
◆ Cylinder Head Gasket
Chain Tensioner Slipper
Chain Tensioner
9.0 (92, 80 in.-lbf)
◆ Gasket
Timing Chain Cover
◆ Crankshaft Front Oil Seal
Crankshaft Pulley
Water Pump
120 (1,200, 87)
x 6
◆ O–Ring
Water Pump Pulley
x 4
◆ Gasket
Crank Angle Sensor Plate
Chain Vibration Damper
Crankshaft Position Sensor
N·m (kgf·cm, ft·lbf) : Specified torque
N ◆ Non–reusable part
A10448

2ZZ-GE

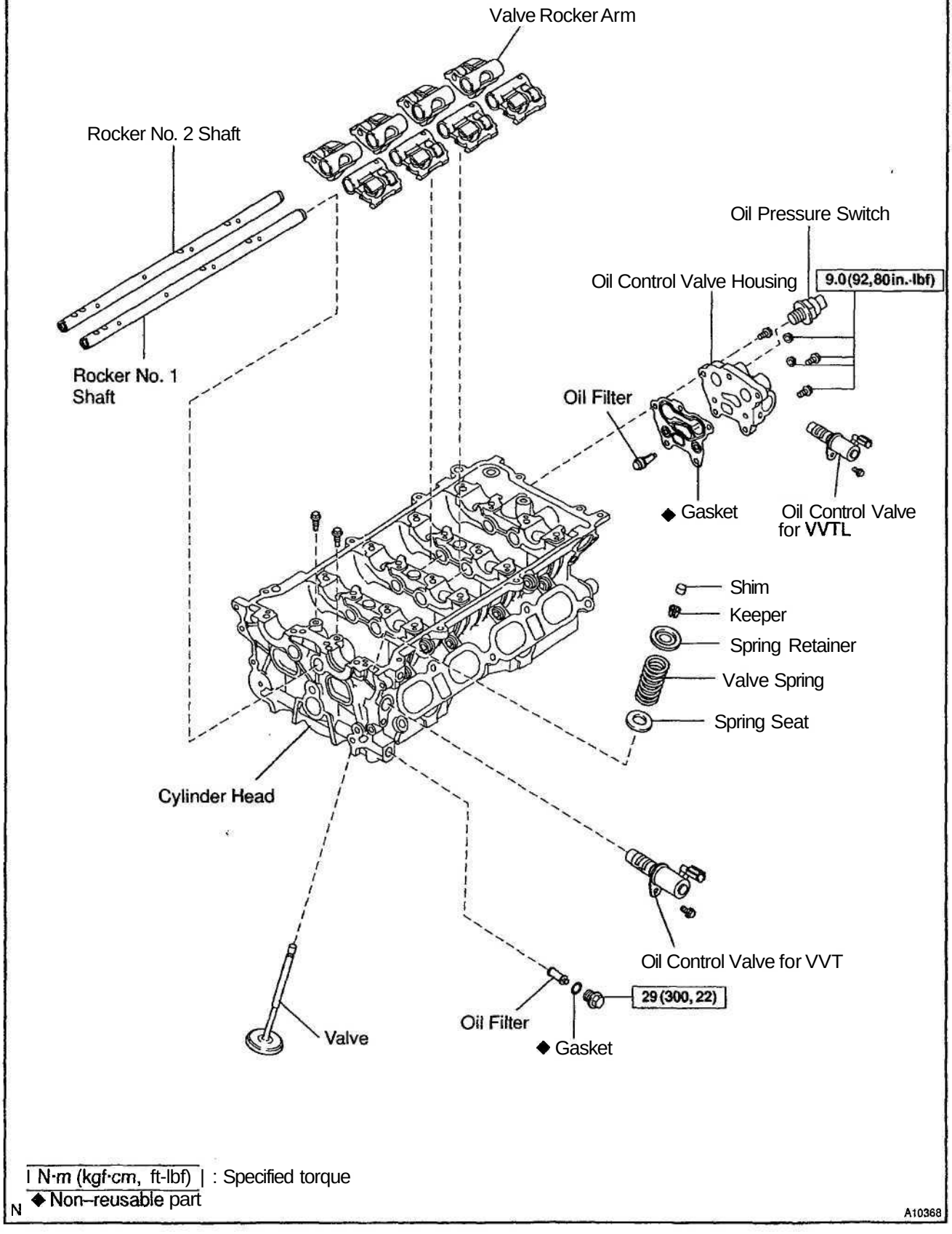

| N·m (kgf·cm, ft-lbf) | : Specified torque
◆ Non-reusable part

N

A10368

EM15U-01

REMOVAL

1. REMOVE BATTERY
2. REMOVE ECU BOX (See page EM–74)
3. DRAIN ENGINE COOLANT
4. DISCONNECT ENGINE COOLANT RESERVOIR
5. REMOVE AIR CLEANER ASSEMBLY
6. DISCONNECT ACCELERATOR CABLE
7. REMOVE DRIVE BELT AND ALTERNATOR (See page CH–7)
8. REMOVE EXHAUST PIPE (See page EM–74)

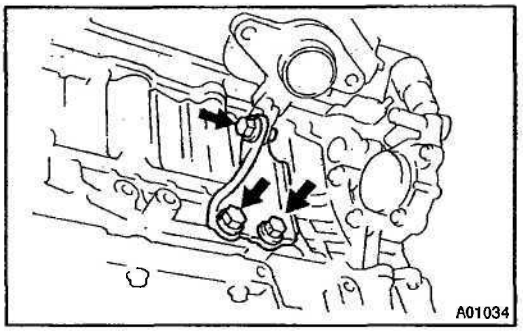

9. 1ZZ–FE:
   REMOVE EXHAUST MANIFOLD

(a) Remove the 3 bolts and exhaust manifold stay.
(b) Remove the 6 bolts and upper heat insulator.

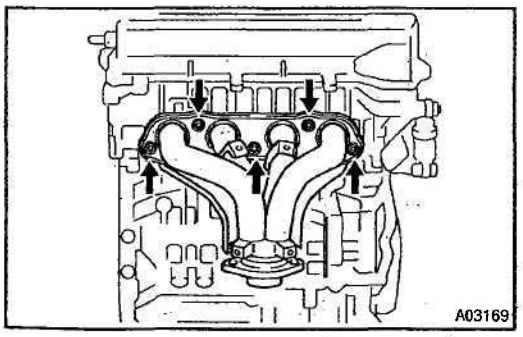

(c) Remove the 5 nuts, exhaust manifold and gasket.
(d) Remove the 3 bolts and lower heat insulator.

10. 2ZZ–GE:
REMOVE EXHAUST MANIFOLD

(a) Remove the 4 bolts and exhaust manifold stay.
(b) Remove the 5 bolts and upper heat insulator.

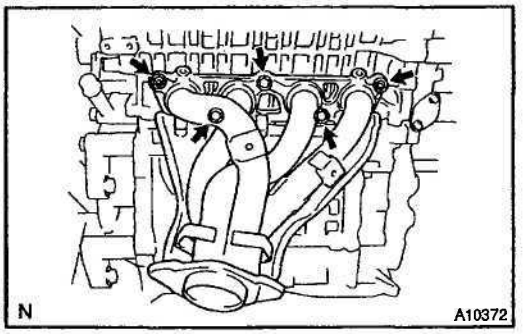

(c) Remove the 3 bolts, 2 nuts, exhaust manifold and gasket.
(d) Remove the 4 bolts and lower heat insulator.

11. REMOVE IGNITION COIL (See page IG–6)
12. REMOVE SPARK PLUG (See page IG–1)
13. REMOVE PCV HOSES
14. REMOVE THROTTLE BODY (See page SF–36)
15. REMOVE INJECTOR (See page SF–21)

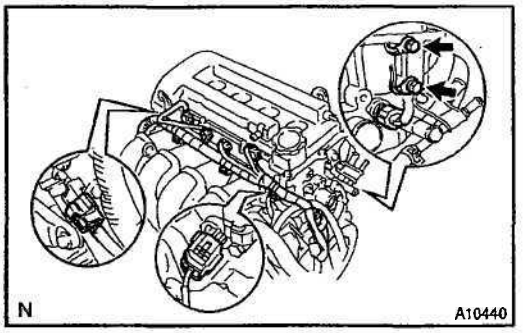

16. 1ZZ–FE:
DISCONNECT ENGINE WIRE FROM CYLINDER HEAD

(a) Disconnect the ECT sensor connector.
(b) Disconnect the camshaft position sensor connector.
(c) Disconnect the oil control valve for VVT connector.
(d) Disconnect the 2 ground wires.
(e) Disconnect the 2 clamps and engine wire protector from the intake manifold.

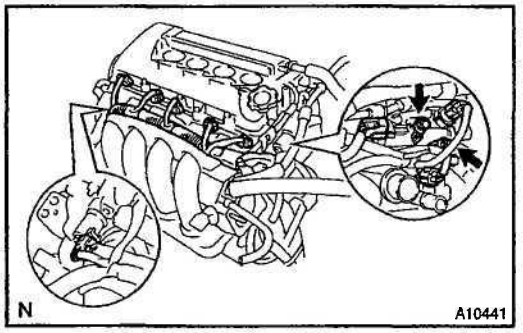

17. 2ZZ–GE:
DISCONNECT ENGINE WIRE FROM CYLINDER HEAD

(a) Disconnect the ECT sensor connector.
(b) Disconnect the camshaft position sensor connector.
(c) Disconnect the oil control valve for VVT connectors.
(d) Disconnect the oil control valve for VVTL connectors.
(e) Disconnect the oil pressure switch connector.
(f) Disconnect the 2 ground wires.
(g) Remove the 2 bolts, and disconnect the engine wire.
(h) Remove the intake manifold No. 2 insulator.

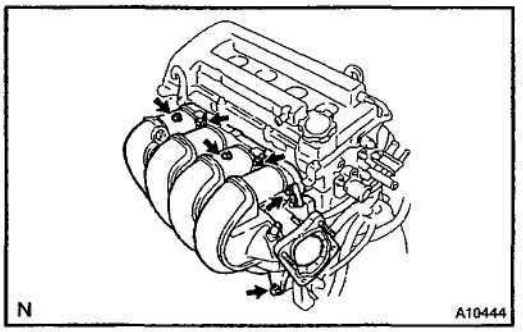

18. 1ZZ-FE:
REMOVE INTAKE MANIFOLD

(a) Disconnect the EVAP hose for ORVR.
(b) Disconnect the brake booster vacuum hose.
(c) Remove the 4 bolts, 2 nuts, intake manifold, 2 wire harness stays and gasket.

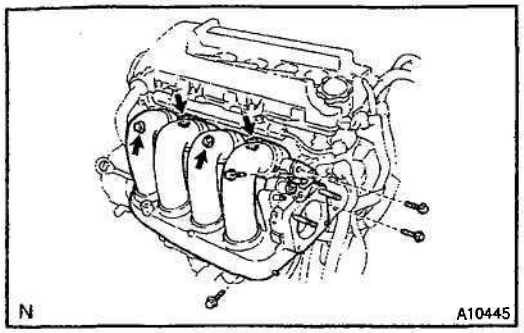

19. 2ZZ–GE:
REMOVE INTAKE MANIFOLD

(a) Disconnect the EVAP hose for ORVR.
(b) Disconnect the brake booster vacuum hose.
(c) Remove the bolt and disconnect the No. 1 ventilation pipe and oil dipstick and guide.
(d) Remove the 2 bolts, nut and stay.
(e) Remove the 4 bolts, 2 nuts, intake manifold and gasket.
(f) Remove the intake manifold insulator.

20. REMOVE CAMSHAFT POSITION SENSOR

21. REMOVE ECT SENSOR

22. REMOVE PCV VALVE AND GROMMET

23. REMOVE OIL FILLER CAP

24. REMOVE CAMSHAFT TIMING SPROCKETS
(See page IG–9)

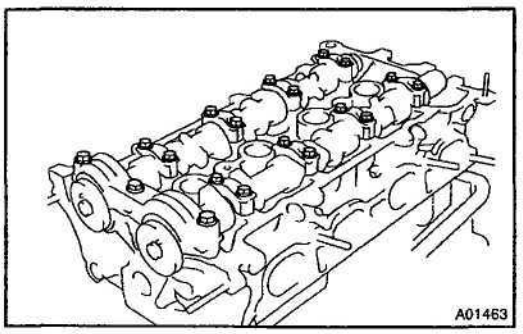

25. 1ZZ–FE:
REMOVE CAMSHAFT

Uniformly loosen and remove the 19 bearing cap bolts, in several passes, in the sequence shown, and remove the 9 bearing caps, intake and exhaust camshafts.

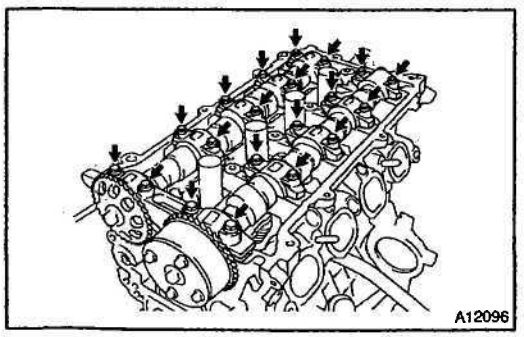

26. 2ZZ–GE:
REMOVE CAMSHAFT

Uniformly loosen and remove the 20 bearing cap bolts, in several passes, in the sequence shown, and remove the 9 bearing caps intake and exhaust camshaft.

27. REMOVE CYLINDER HEAD

(a) Disconnect the upper radiator hoses from the water hose union.

(b) Disconnect the heater water hose from the water hose union.

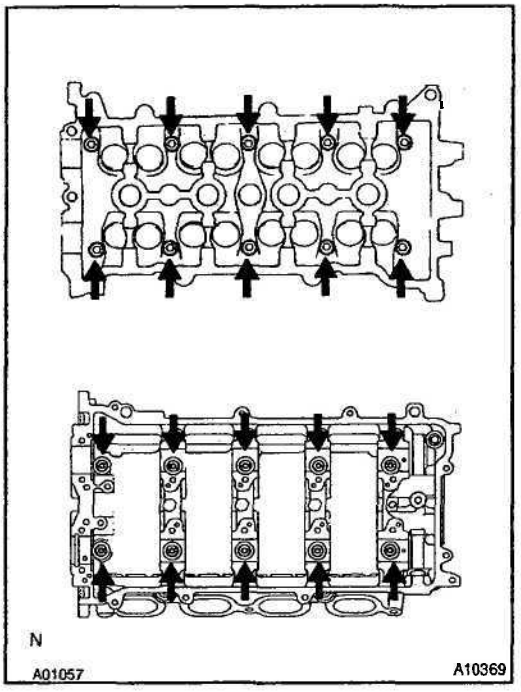

(c) Using a 10 mm bi–hexagon wrench, uniformly loosen and remove the 10 cylinder head bolts, in several passes, in the sequence shown. Remove the 10 cylinder head bolts and plate washers.

NOTICE:

Head warpage or cracking could result from removing bolts in an incorrect order.

(d) Remove the bolt holding the water bypass pipe to the cylinder head.

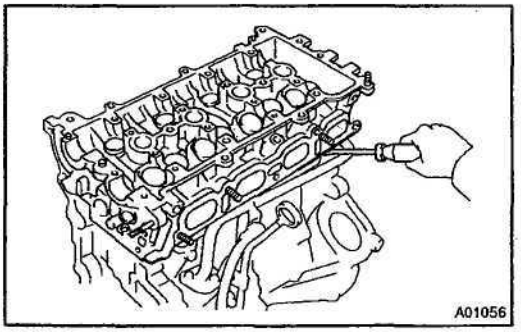

(e) Lift the cylinder from the dowels on the cylinder block and replace the cylinder head on wooden blocks on a bench.

HINT:

If the cylinder head is difficult to lift off, pry between the cylinder head and cylinder block with a screwdriver.

NOTICE:

Be careful not to damage the contact surfaces of the cylinder head and cylinder block.

EM15V-01

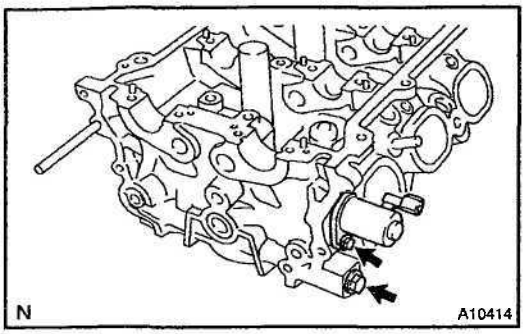

DISASSEMBLY

1. REMOVE OIL CONTROL VALVE for VVT

Remove the bolt and cam timing oil control valve.

2. REMOVE OIL CONTROL VALVE FILTER

Remove the bolt, gasket and oil control valve filter.

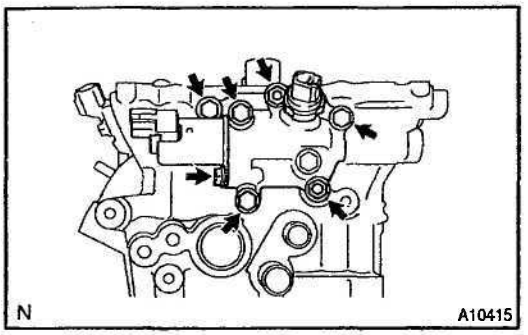

3. 2ZZ–GE:
REMOVE OIL CONTROL VALVE HOUSING

(a) Remove the bolt and oil control valve for VVTL.
(b) Using SST, remove the oil pressure switch.
SST 09816–30010
(c) Remove the 3 bolts, 2 nuts, oil control valve housing and gasket.
(d) Remove the oil control valve filter.

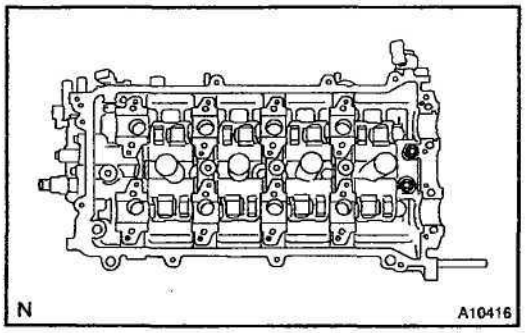

4. 2ZZ–GE:
REMOVE VALVE ROCKER ARM

(a) Remove the 2 bolts, rocker No. 1 and No. 2 shafts.
(b) Remove the 8 valve rocker arm.

HINT:
Arrange the rocker arms in the correct order.

5. REMOVE VALVE LIFTERS

HINT:
Arrange the valve lifters in the correct order.

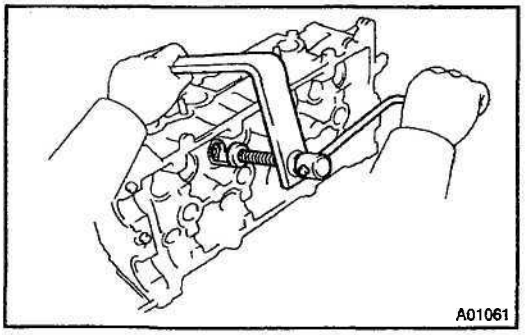

6. REMOVE VALVES

(a) Using SST, compress the valve spring and remove the 2 keepers.
SST 09202-70020 (09202–00020)
(b) Remove the spring retainer.
(c) Remove the valve spring.
(d) Remove the valve.

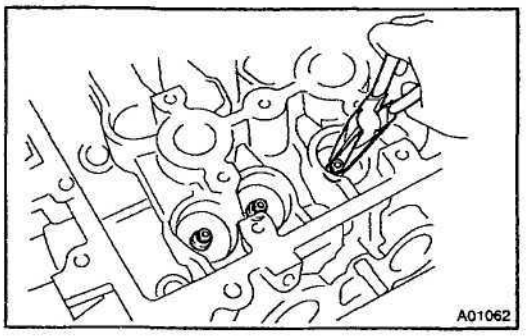

(e) Using needle–nose pliers, remove the oil seal.

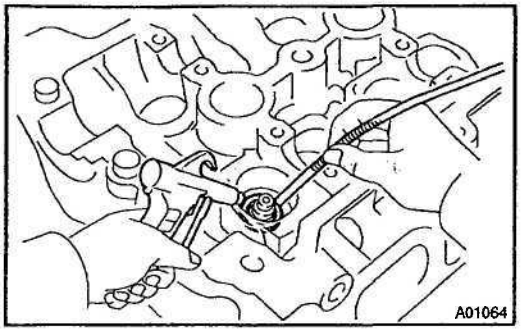

(f) Using compressed air and magnetic finger, remove the spring seat by blowing air.

HINT:

Arrange the valves, valve springs, spring seats, and spring retainers in the correct order.

EM15W-01

INSPECTION

1. CLEAN TOP SURFACES OF PISTONS AND CYLINDER BLOCK

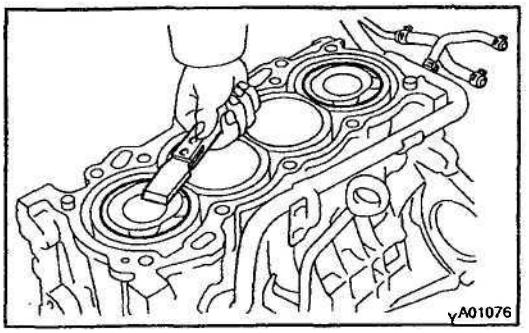

(a) Turn the crankshaft, and bring each piston to top dead center (TDC). Using a gasket scraper, remove all the carbon from the piston surface.

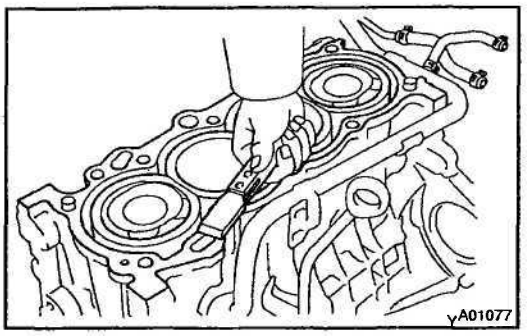

(b) Using a gasket scraper, remove all the gasket material from the cylinder block surface.

(c) Using compressed air, blow carbon and oil from the bolt holes.

CAUTION:

Protect your eyes when using high pressure compressed air.

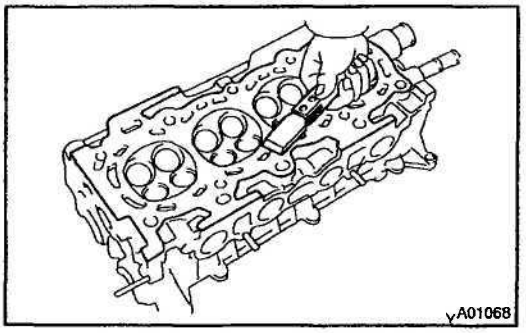

2. REMOVE GASKET MATERIAL

Using a gasket scraper, remove all the gasket material from the cylinder block contact surface.

NOTICE:

Be careful not to scratch the cylinder block contact surface.

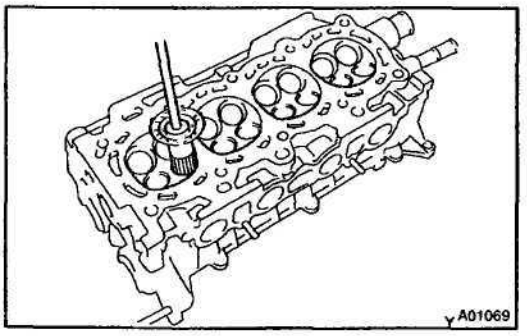

3. CLEAN COMBUSTION CHAMBERS

Using a wire brush, remove all the carbon from the combustion chambers.

NOTICE:

Be careful not to scratch the cylinder block contact surface.

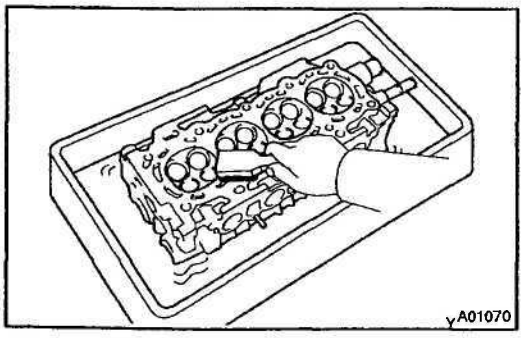

4. CLEAN CYLINDER HEAD

Using a soft brush and solvent, thoroughly clean the cylinder head.

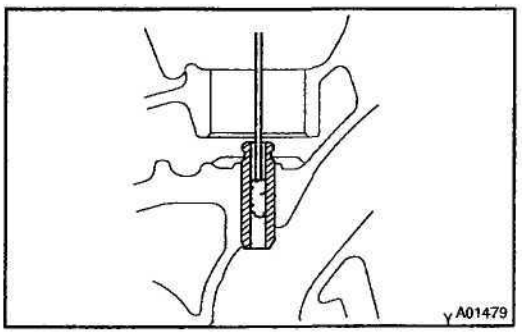

5. CLEAN VALVE GUIDE BUSHINGS

Using a valve guide bushing brush and solvent, clean all the guide bushings.

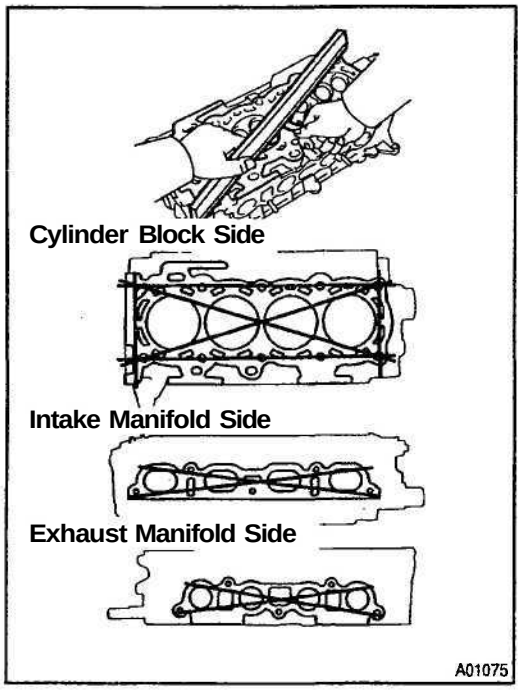

6. INSPECT FOR FLATNESS

Using a precision straight edge and feeler gauge, measure the surface contacting the cylinder block and the manifolds for warpage.

Maximum warpage: 0.05 mm (0,0020 in.)

If warpage is greater than maximum, replace the cylinder head.

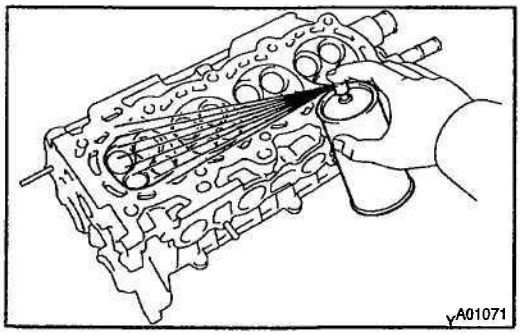

7. INSPECT FOR CRACKS

Using a dye penetrate, check the combustion chamber, intake ports, exhaust ports and cylinder block surface for cracks.

If cracked, replace the cylinder head.

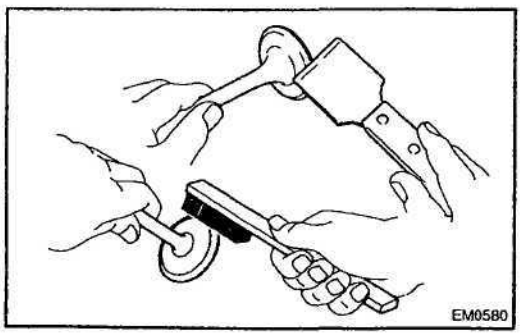

8. CLEAN VALVES

(a) Using a gasket scraper, chip off any carbon from the valve head.

(b) Using a wire brush, thoroughly clean the valve.

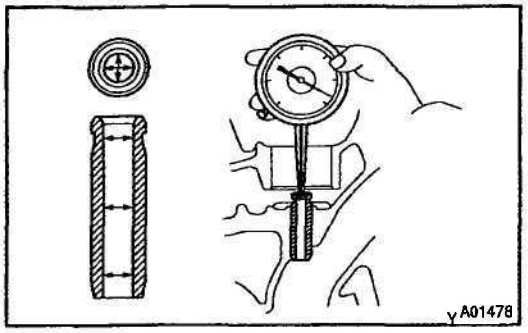

9. INSPECT VALVE STEMS AND GUIDE BUSHINGS

(a) Using a caliper gauge, measure the inside diameter of the guide bushing.

Bushing inside diameter:
1ZZ–FE 5.510 - 5.530 mm (0.2169 - 0.2177 in.)
2ZZ–GE 5.500 - 5.518 mm (0.2165 - 0.2172 in.)

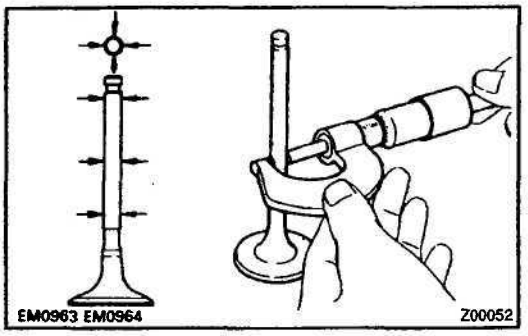

(b) Using a micrometer, measure the diameter of the valve stem.

Valve stem diameter:
1ZZ-FE
Intake 5.470 - 5.485 mm (0.2154 - 0.2159 in.)
Exhaust 5.465 - 5.480 mm (0.2152 - 0.2157 in.)
2ZZ–GE
Intake 5.460 - 5.475 mm (0.21496 - 0.21555 in.)
Exhaust 5.445 - 5.470 mm (0.21437 - 0.21535 in.)

(c) Subtract the valve stem diameter measurement from the guide bushing inside diameter measurement.

Standard oil clearance:
1ZZ-FE
Intake 0.025 - 0.060 mm (0.0010 - 0.0024 in.)
Exhaust 0.030 - 0.065 mm (0.0012 - 0.0026 in.)
2ZZ-GE
Intake 0.025 - 0.058 mm (0.00098 - 0.00228 in.)
Exhaust 0.030 - 0.063 mm (0.00118 - 0.00248 in.)
Maximum oil clearance:
1ZZ-FE
Intake 0.08 mm (0.0031 in.)
Exhaust 0.10 mm (0.0039 In.)
2ZZ–GE
0.10 mm (0.0039 in.)

If the clearance is greater than maximum, replace the valve and guide bushing.

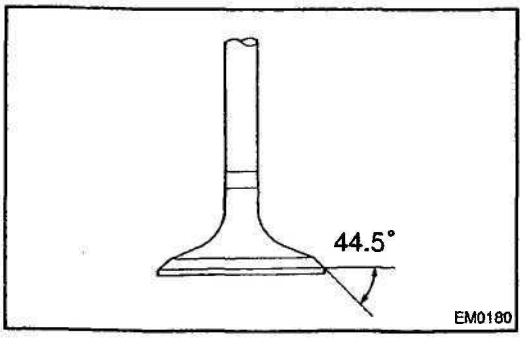

10. INSPECT VALVES

(a) Check the valve is ground to the correct valve face angle.
Valve face angle: 44.5°

(b) Check that the surface of the valve for wear.

If the valve face is worn, replace the valve.

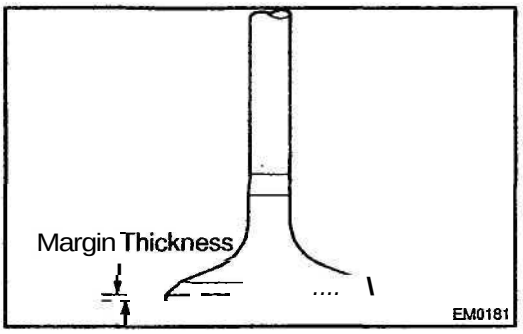

(c) Check the valve head margin thickness.
Standard margin thickness: 1.0 mm (0.039 in.)
Minimum margin thickness: 0.7 mm (0.028 in.)
If the margin thickness is less than minimum, replace the valve.

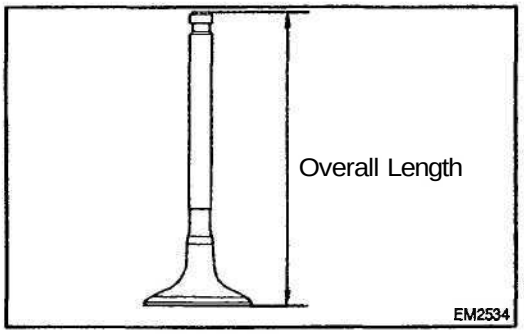

(d) Check the valve overall length.
Standard overall length:
1ZZ–FE
Intake 88.65 mm (3.4902 in.)
Exhaust 88.69 mm (3.4917 in.)
2ZZ–GE
Intake 111.3 mm (4.382 in.)
Exhaust 111.7 mm (4.398 in.)
Minimum overall length:
1ZZ-FE
Intake 88.35 mm (3.4783 in.)
Exhaust 88.39 mm (3.4799 in.)
2ZZ–GE
Intake 110.9 mm (4.366 in.)
Exhaust 111.3 mm (4.382 in.)
If the overall length is less than minimum, replace the valve.
(e) Check the surface of the valve stem tip for wear.
If the valve stem tip is worn, replace the valve.

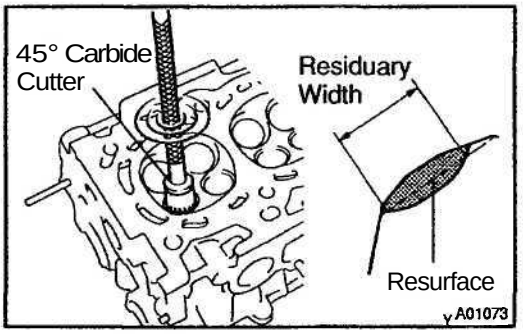

11. INSPECT AND CLEAN VALVE SEATS
(a) Using a 45° carbide cutter, resurface the valve seats. Remove only enough metal to clean the seats.
(b) After resurfacing the valve seat 45°, measure the residuary width of the valve seat 45°.
Minimum residuary length:
Intake 3.3 mm (0.130 in.)
Exhaust 3.2 mm (0.126 in.)

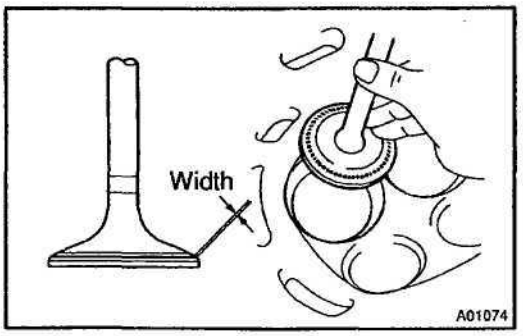

If the valve seat 45° residuary width less than minimum, replace the cylinder head.
(c) Check the valve seating position.
Apply a light coat of prussian blue (or white lead) to the valve face. Lightly press the valve against the seat. Do not rotate valve.
(d) Check the valve face and seat for the following:
- If blue appears 360° around the face, the valve is concentric. If not, replace the valve.

- If blue appears 360° around the valve seat, the guide and face are concentric. If not, resurface the seat.
- Check that the seat contact is in the middle of the valve face with the following width:

1.0 – 1.4 mm (0.039 - 0.055 in.)

If not, correct the valve seats as follows:

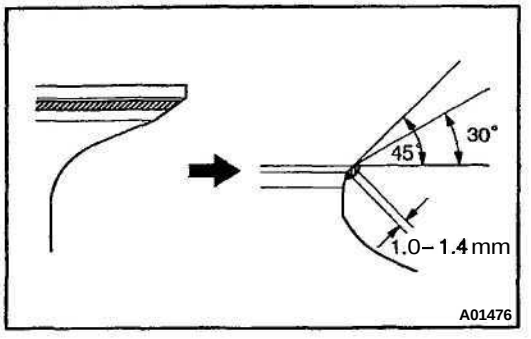

(1) If the seating is too high on the valve face, use 30° and 45° cutters to correct the seat.

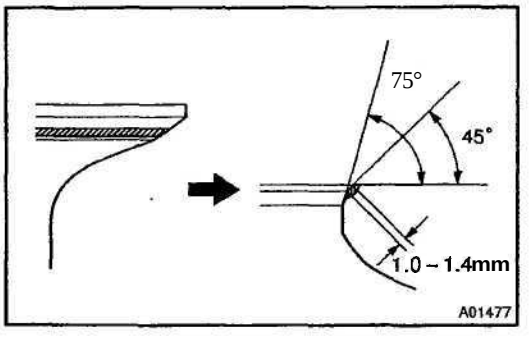

(2) If the seating is too low on the valve face, use 75° and 45° cutters to correct the seat.

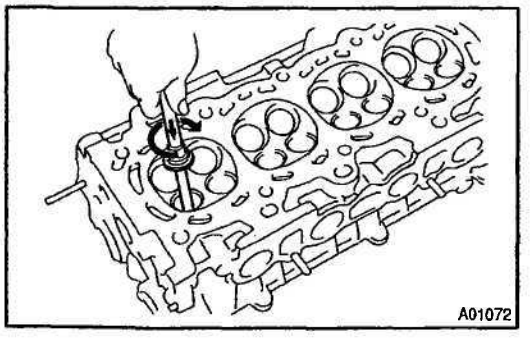

(e) Hand–lap the valve and valve seat with an abrasive compound.

(f) After hand–lapping, clean the valve and valve seat.

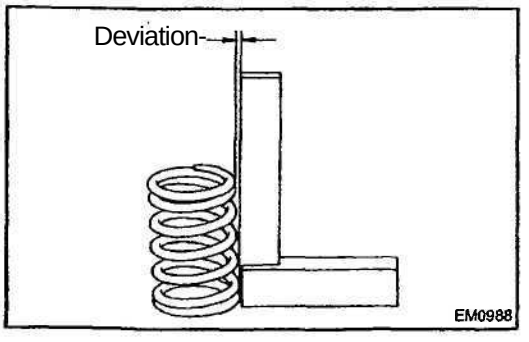

12. INSPECT VALVE SPRINGS

(a) Using a steel square, measure the deviation of the valve spring.

Maximum deviation: 1.6 mm (0.063 in.)

Maximum angle (reference): 2°

If the deviation is greater than maximum, replace the valve spring.

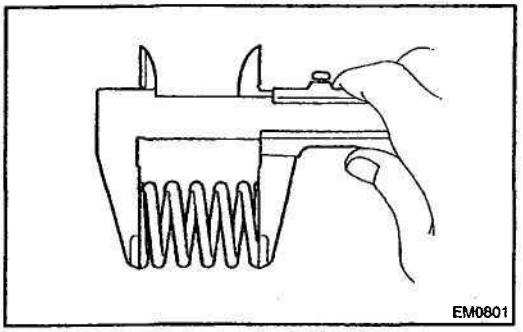

(b) Using vernier calipers, measure the free length of the valve spring.

Free length:
1ZZ–FE 45.90 mm (1.8070 in.)
2ZZ–GE
Intake 46.4 mm (1.830 in.)
Exhaust 46.5 mm (1.831 in.)

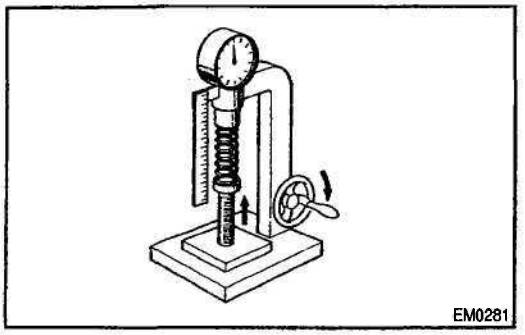

(c) Using a spring tester, measure the tension of the valve spring at the specified installed length.

Installed tension:
1ZZ-FE
139.6 – 154.4 N (14.2 - 15.8 kgf, 31.3 - 34.8 lbf)
at 33.6 mm (1.323 in.)
2ZZ–GE
Intake
220.2 - 243.8 N (22.5 - 24.7 kgf, 49.6 - 55.5 lbf)
at 38.5 mm (1.516 in.)
Exhaust
208.2 - 229.8 N (21.2 - 23.4 kgf, 47.6 - 52.6 lbf)
at 38.5 mm (1.516 in.)
Maximum working tension:
1ZZ-FE
244.9 - 276.1 N (25.5 - 28.1 kgf, 56.2 - 61.9 lbf)
at 24.6 mm (0.969 in.)
2ZZ–GE
Intake
533 - 589 N (54.4 - 60.1 kgf, 119.9 - 132.5 lbf)
at 27.3 mm (1.075 in.)
Exhaust
495.5 - 548.5 N (50.5 - 55.9 kgf, 111.3 – 123.2 lbf)
at 28.5 mm (1.122 in.)

If the installed tension is not as specified, replace the valve spring

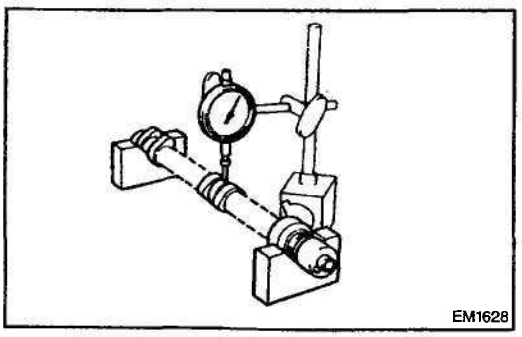

13. INSPECT CAMSHAFT FOR RUNOUT

(a) Place the camshaft on V–blocks.

(b) Using a dial indicator, measure the circle runout at the center journal.

Maximum circle runout: 0.03 mm (0.0012 in.)

If the circle runout is greater than maximum, replace the camshaft.

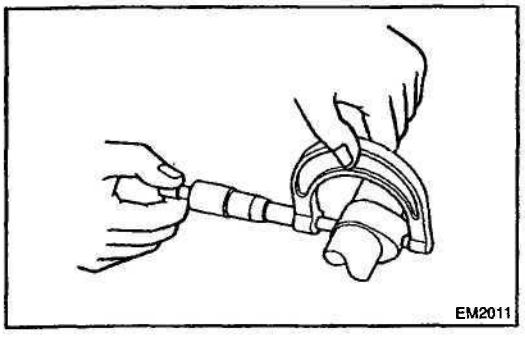
EM2011

14. INSPECT CAM LOBES

Using a micrometer, measure the cam lobe height.

Standard cam lobe height:
1ZZ-FE:
Intake 44.333 - 44.433 mm (1.7454 – 1.7493 in.)
Exhaust 43.761 - 43.861 mm (1.7229 – 1.7268 in.)
2ZZ–GE:
INTAKE
No. 1 40.607 - 40.707 mm (1.59586 – 1.59979 in.)
No. 2 38.769 - 38.869 mm (1.52362 – 1.52755 in.)
2ZZ–GE:
EXHAUST
No. 1 40.019 - 40.119 mm (1.57275 – 1.57668 in.)
No. 2 38.863 - 38.963 mm (1.52732 – 1.53125 in.)
Minimum cam lobe height:
1ZZ–FE:
Intake 44.18 mm (1.7394 in.)
Exhaust 43.61 mm (1.7169 in.)
2ZZ–GE:
Intake
No.1 40.45 mm (1.5925 in.)
No.2 38.61 mm (1.5201 in.)
Exhaust
No.1 39.86 mm (1.5693)
No.2 38.71 mm (1.5240)

If the cam lobe height is less than minimum, replace the camshaft.

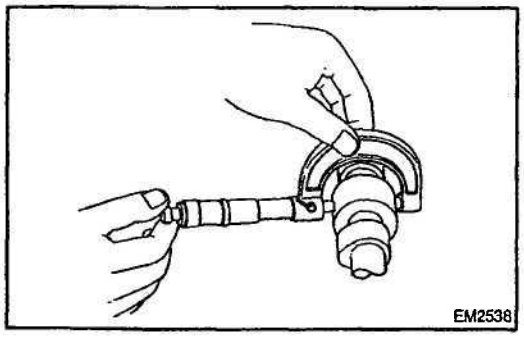
EM2538

15. INSPECT CAMSHAFT JOURNALS

Using a micrometer, measure the journal diameter.

1ZZ-FE:
No.1 journal diameter:
34.449 - 34.465 mm (1.3563 – 1.3569 in.)
Others journal diameter:
22.949 - 22.965 mm (0.9035 - 0.9041 in.)
2ZZ–GE:
No.1 journal diameter:
34.449 - 34.465 mm (1.35626 – 1.35689 in.)
Other journal diameter:
27.949 - 27.965 mm (1.10035 – 1.10098 in.)

If the journal diameter is not as specified, check the oil clearance.

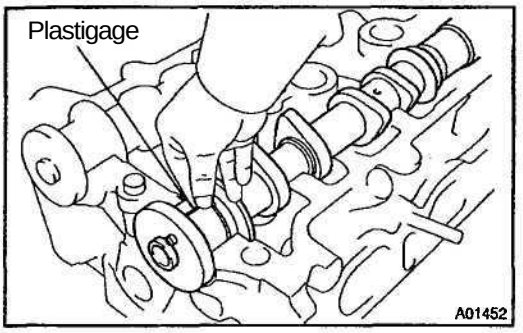

16. INSPECT CAMSHAFT JOURNAL CLEARANCE

(a) Clean the bearing caps and camshaft journals.

(b) Place the camshafts on the cylinder head.

(c) Lay a strip of Plastigage across each of the camshaft journal.

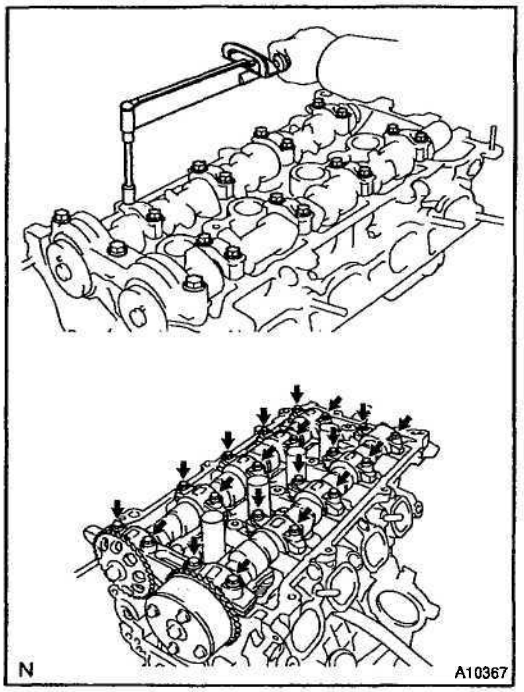

(d) Install the bearing caps (See page EM–65).

Torque:
1ZZ–FE:
No.1 23 N·m (235 kgf·cm, 17 ft·lbf)
No.3 13 N·m (133 kgf·cm, 10 ft·lbf)
2ZZ–GE: 18.5 N·m (189 kgf·cm, 14 ft·lbf)

NOTICE:
Do not turn the camshaft.

(e) Remove the bearing caps.

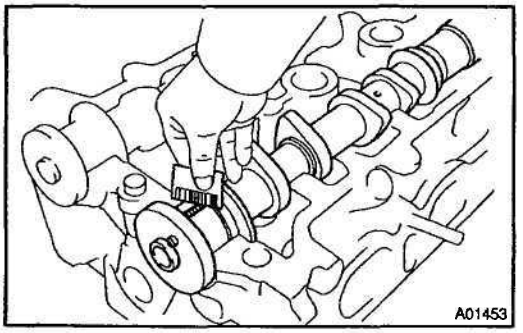

(f) Measure the plastigage at its widest point.

1ZZ–FE:
Standard oil clearance:
0.035 - 0.072 mm (0.0014 - 0.0028 in.)
Maximum oil clearance:
0.10 mm (0.0039 in.)
2ZZ–GE:
Standard oil clearance:
No. 1 journal 0.035 - 0.076 mm (0.00138 - 0.00299 in.)
Other journal 0.035 - 0.072 mm (0.00138 - 0.00283 in.)
Maximum oil clearance:
0.10 mm (0.039 in.)

If the oil clearance is greater than maximum, replace the camshaft. If necessary, replace the bearing caps and cylinder head as a set.

(g) Completely remove the Plastigage.

(h) Remove the camshafts.

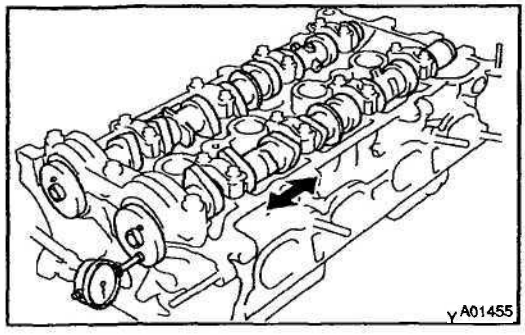

17. INSPECT CAMSHAFT THRUST CLEARANCE

(a) Install the camshafts. (See page EM–65)

(b) Using a dial indicator, measure the thrust clearance while moving the camshaft back and forth.

1ZZ-FE:

Standard thrust clearance:
0.040 - 0.095 mm (0.0016 - 0.0037 in.)
Maximum thrust clearance:
0.11 mm (0.0043 in.)

2ZZ–GE:

Standard thrust clearance:
0.04 - 0.14 mm (0.0016 - 0.0055 in.)
Maximum thrust clearance:
0.15 mm (0.0059 in.)

If the thrust clearance is greater than maximum, replace the camshaft. If necessary, replace the bearing caps and cylinder head as a set.

(c) Remove the camshafts.

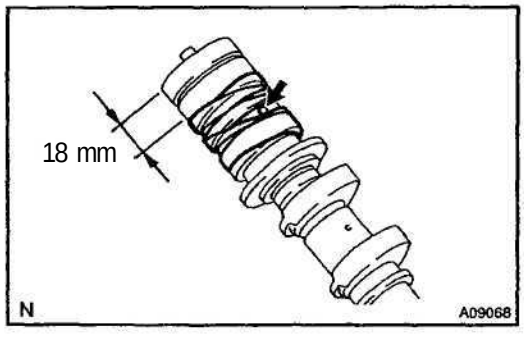

18. INSPECT VALVE TIMING CONTROLLER ASSEMBLY

(a) Apply vinyl tape to all the ports except the one indicated by the arrow in the illustration.

NOTICE:

Do not apply tape in the range from the tip of the camshaft to 18 mm from that tip.

(b) Install the valve timing controller assembly.

Torque: 47 N·m (480 kgf·cm, 35 ft·lbf)

NOTICE:

Do not push valve timing controller assembly to the camshaft forcibly when installing it.

(c) Check that the valve timing controller assembly will not turn.

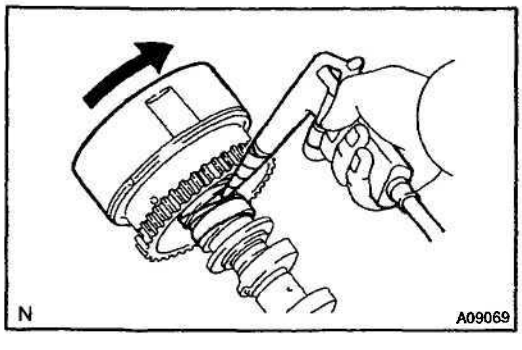

(d) Wind tape around the tip of the air gun and apply air of approx. 100 kPa (1 kgf/cm^2, 14 psi) to the port of the camshaft.

NOTICE:

When the oil splashes, wipe it off with a shop rag and the likes.

HINT:

Perform this in order to release the lock pin for the maximum delay angle locking.

(e) Under the condition of (d), turn the valve timing controller assembly to the advance angel side (the arrow marked direction in the illustration) with your hand.
Standard: Must turn

HINT:
Depending on the air pressure, the valve timing controller assembly will turn to the advance angle side without applying force by hand. Also, under the condition that the pressure can be hardly applied because of the air leakage from the port, there may be the case that the lock pin could be hardly released.

(f) Except the position where the lock pin meets at the maximum delay angle, let the valve timing controller assembly turn back and forth and check the movable range and that there is no disturbance.
Standard: Movable smoothly in the range about 30°

(g) Turn the valve timing controller assembly with your hand and lock it at the maximum delay angel position.

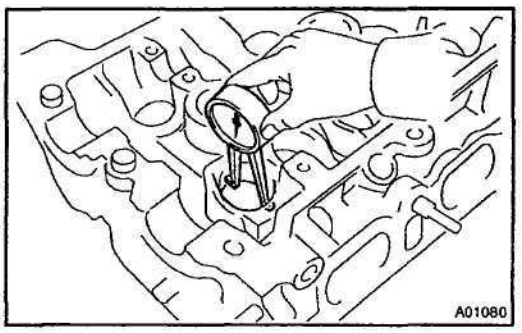

19. 1ZZ-FE:
INSPECT VALVE LIFTERS AND LIFTER BORES

(a) Using a caliper gauge, measure the lifter bore diameter of the cylinder head.
Lifter bore diameter:
31.000 – 31.025 mm (1.2205 – 1.2215 in.)

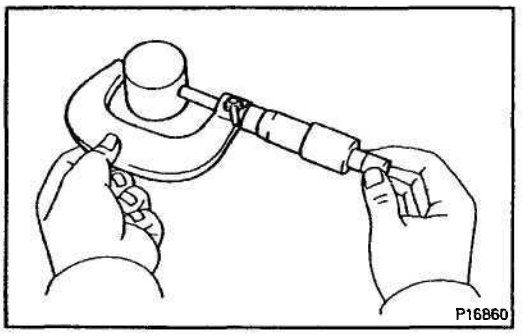

(b) Using a micrometer, measure the lifter diameter.
Lifter diameter:
30.966 - 30.976 mm (1.2191 – 1.2195 in.)

(c) Subtract the lifter diameter measurement from the lifter bore diameter measurement.
Standard oil clearance:
0.024 - 0.059 mm (0.0009 - 0.0023 in.)
Maximum oil clearance:
0.079 mm (0.0031 in.)

If the oil clearance is greater than maximum, replace the lifter. If necessary, replace the cylinder head.

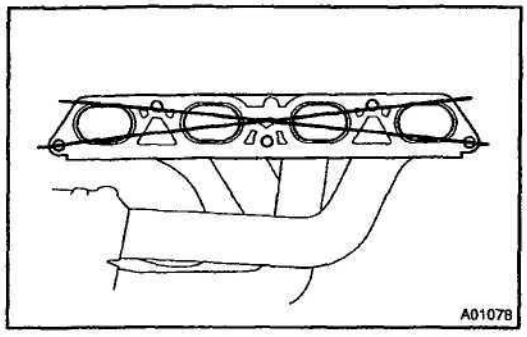

20. INSPECT INTAKE MANIFOLD

Using a precision straight edge and feeler gauge, measure the surface contacting the cylinder head for warpage.

Maximum warpage: 0.10 mm (0.0039 in.)

If warpage is greater than maximum, replace the manifold.

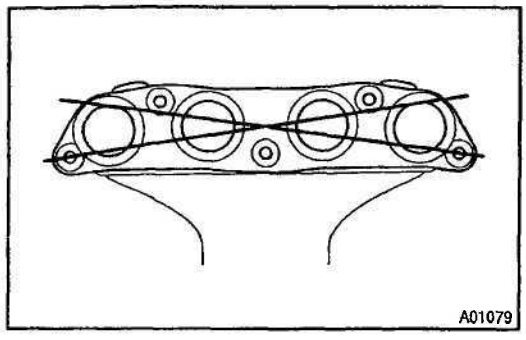

21. INSPECT EXHAUST MANIFOLD

Using a precision straight edge and feeler gauge, measure the surface contacting the cylinder head for warpage.

Maximum warpage: 0.70 mm (0.0276 in.)

If warpage is greater than maximum, replace the manifold.

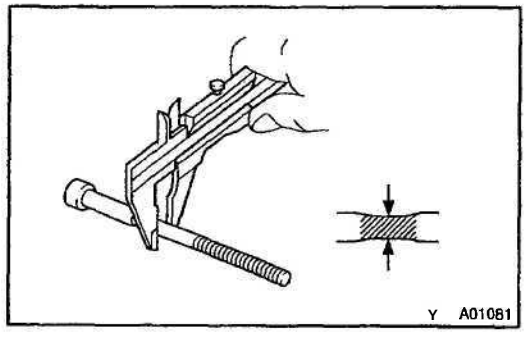

22. INSPECT CYLINDER HEAD BOLTS

Standard outside diameter:
9.0 - 9.2 mm (0.354 - 0.362 in.)
Minimum outside diameter:
9.0 mm (0.354 in.)

If the outer diameter is less than minimum, replace the bolt.

EM05X-04

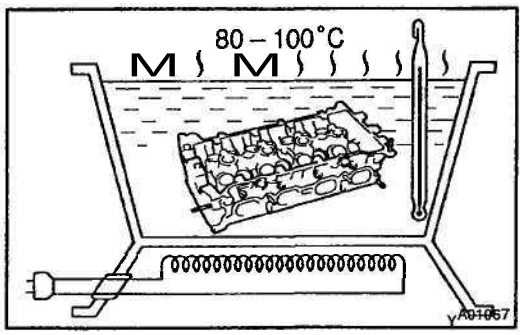

REPLACEMENT

REPLACE VALVE GUIDE BUSHINGS

(a) Gradually heat the cylinder head to 110 – 130 °C (230 - 266 °F).

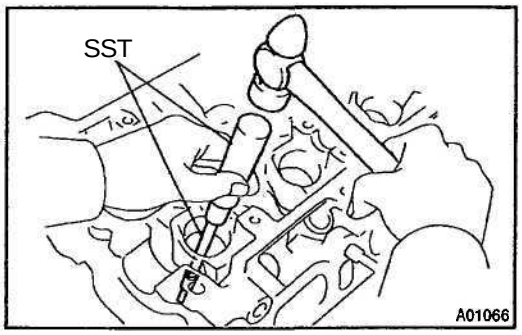

(b) Using SST and a hammer, tap out the guide bushing.
SST 09201–01055, 09950–70010 (09951–07100)

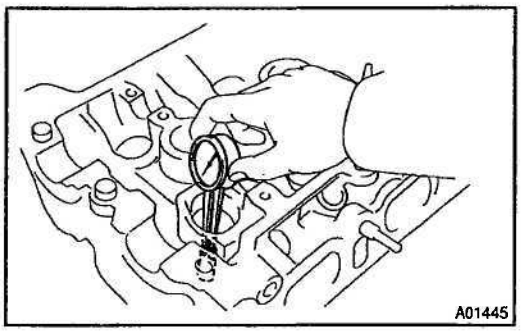

(c) Using a caliper gauge, measure the bushing bore diameter of the cylinder head.

Both intake and exhaust

Bushing bore diameter mm (in.)	Bushing size
10.285 – 10.306 (0.4049 - 0.4057)	Use STD
10.335 – 10.356 (0.4068 - 0.4077)	Use O/S 0.05

(d) 1ZZ-FE:

Select the new guide bushing (STD or O/S 0.05).

If the bushing bore diameter of the cylinder head is greater than 10.306 mm (0.4057 in.), machine the bushing bore to the following dimension:

10.335 – 10.356 mm (0.4068 - 0.4077 in.)

If the bushing bore diameter of the cylinder head is greater than 10.356 mm (0.4077 in.), replace the cylinder head.

(e) 1ZZ-FE:

Gradually heat the cylinder head to 80 – 100 °C (176 - 212 °F).

Both intake and exhaust

Bushing bore diameter mm (in.)	Bushing size
10.488 – 10.506 (0.4129 – 0.4136)	Use STD
10.538 – 10.556 (0.4149 – 0.4156)	Use O/S 0.05

(f) 2ZZ–GE:

Select the new guide bushing (STD or 0/S 0.05).

If the bushing bore diameter of the cylinder head is greater than 10.506 mm (0.4136 in.), machine the bushing bore to the following dimension:

10.538 – 10.556 mm (0.4149 - 0.4156 in.)

If the bushing bore diameter of the cylinder head is greater than 10.556 mm (0.4156 in.), replace the cylinder head.

(g) 2ZZ–GE:

Gradually heat the cylinder head to 110 - 130 °C (230 - 266 °F).

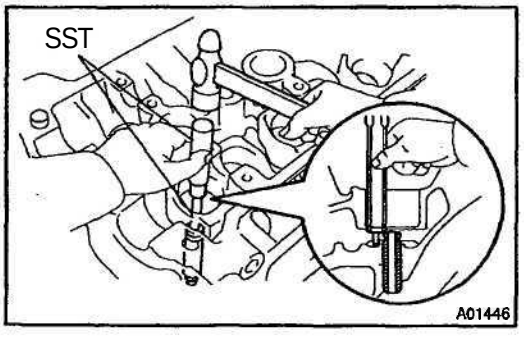

(h) Using SST and a hammer, tap in a new guide bushing to the specified protrusion height.

SST 09201–01055, 09950–70010 (09951–07100)

Protrusion height:

1ZZ–FE 8.7 - 9.1 mm (0.342 - 0.358 in.)

2ZZ–GE 15.3 – 15.7 mm (0.602 - 0.618 in.)

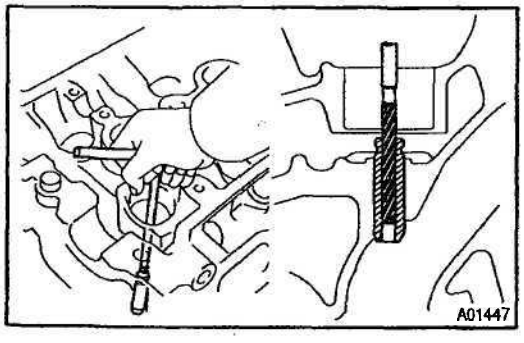

0) Using a sharp 5.5 mm reamer, ream the guide bushing to obtain the standard specified clearance (See page EM–48) between the guide bushing and valve stem.

EM15X-01

REASSEMBLY

HINT:

- Thoroughly clean all parts to be assembled.
- Before installing the parts, apply fresh engine oil to all sliding and rotating surfaces.
- Replace oil seals with new ones.

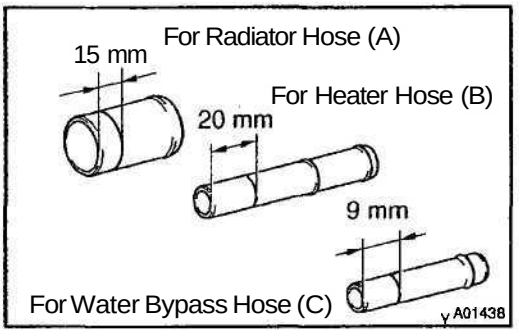

1. INSTALL WATER HOSE UNIONS

HINT:

When using a new cylinder head, water hose unions must be installed.

(a) Mark the standard position away from the edge, onto the water hose union.

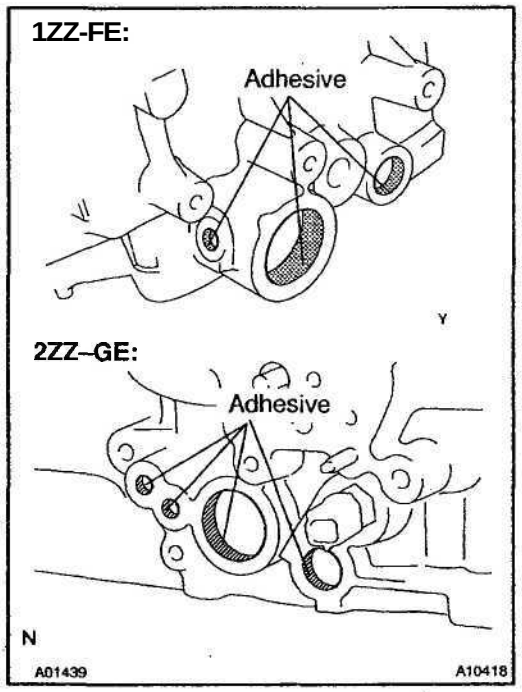

(b) Apply adhesive to the water hose union hole of the cylinder head.

Adhesive:

Part No.08833–00070, THREE BOND 1324 or equivalent

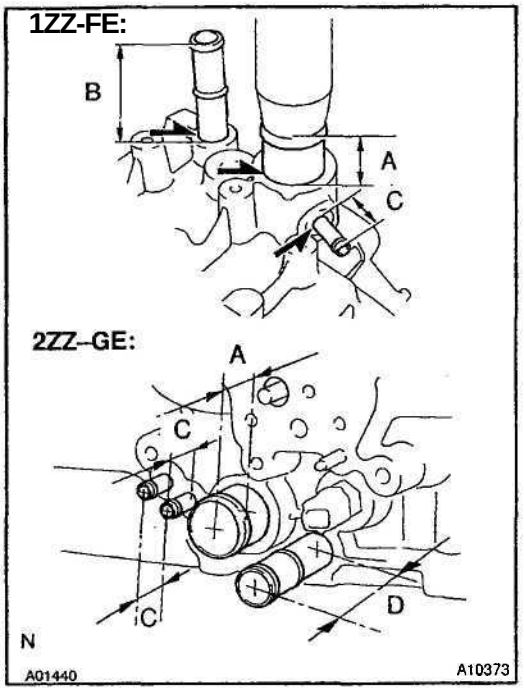

(c) Using a press, press in a new water hose union until there is protruding from the cylinder head.

Standard protrusion:
A 29 mm (1.14 in.)
B 66.5 mm (2.618 in.)
C 24 mm (0.95 in.)
D 69.8 mm (2.630 in.)

NOTICE:

Avoid pressing a new water hose union in too far by measuring the amount of protrusion while pressing.

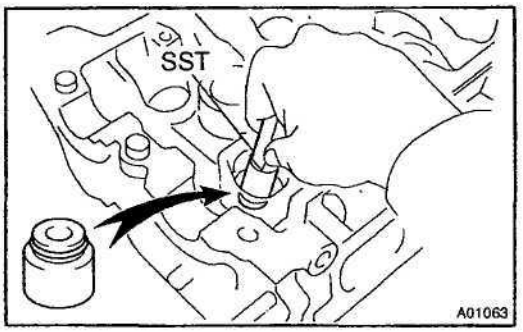

2. INSTALL VALVES

(a) Using SST, push in a new oil seal.
SST 09201–41020

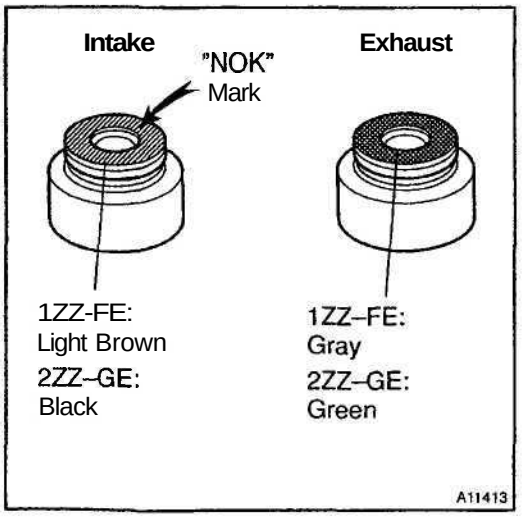

HINT:

- 1ZZ–FE:
  The intake valve oil seal is light brown and the exhaust valve oil seal is gray.
- 2ZZ–GE:
  The intake valve oil seal is black and the exhaust valve oil seal is green.

NOTICE:

Pay much attention assemblrng the oil seal for intake and exhaust. Assembling the wrong one may cause a failure.

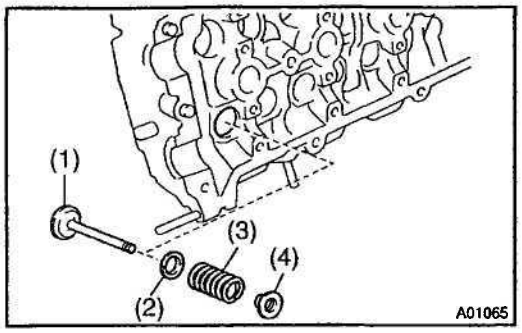

(b) Install the valve (1), spring (2), valve spring (3), and spring retainer (4).

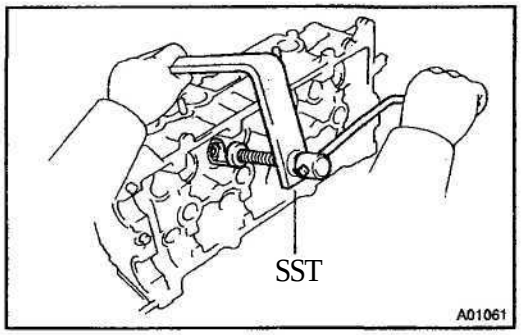

(c) Using SST, compress the valve spring and place the 2 keepers around the valve stem.
SST 09202-70020 (09202–00020)

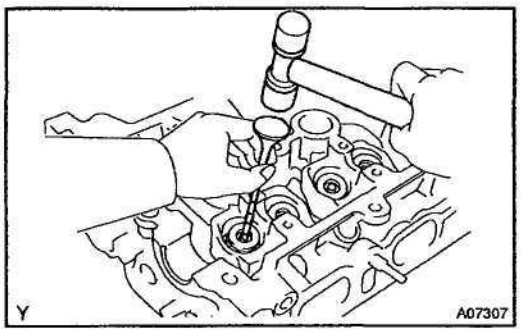

(d) Using a plastic-faced hammer and the valve stem (not in use) tip wound with vinyl tape, lightly tap the valve stem tip to ensure a proper fit.

NOTICE:

Be careful not to damage the valve stem tip.

3. INSTALL VALVE LIFTERS

(a) Install the valve lifter.

(b) Check that the valve lifter rotates smoothly by hand.

4. 2ZZ–GE:

INSTALL VALVE ROCKER ARM

(a) Set the 8 valve rocker arms.

(b) Install the rocker No. 1 and No. 2 shaft with the 2 bolts.
Torque: 7.5 N·m (76 kgf·cm, 66 in.·lbf)

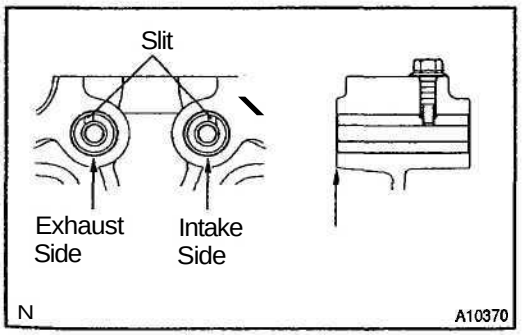

HINT:

- Position the slit of the locker shaft in the direction shown in the illustration.
- Align the locker shaft end with the cylinder head end.

5. 2ZZ–GE:

INSTALL OIL CONTROL VALVE HOUSING

(a) Install the oil control valve filter.

(b) Install the gasket and oil control valve housing with the 3 bolts and 2 nuts.
Torque: 9.0 N·m (92 kgf·cm, 80 in.·lbf)

(c) Apply adhesive to 2 or 3 threads of the oil pressure switch.
Adhesive:
Part No. 08833–00080, THREE BOND 1344, LOCTITE 242 or equivalent

(d) Using SST, install the oil pressure switch.
SST 09816–30010
Torque: 13 N·m (130 kgf·cm, 9 ft·lbf)

(e) Install the oil control valve for VVTL with the bolt.

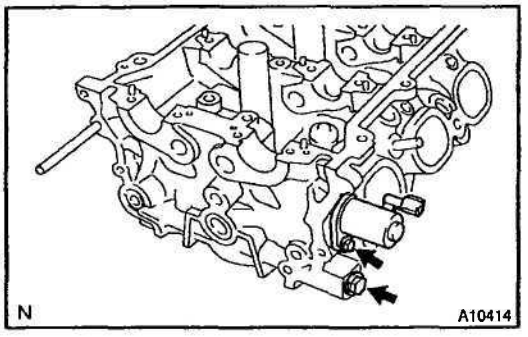

6. INSTALL CONTROL VALVE for VVT

Install the oil control valve for VVT with the bolt.

7. INSTALL OIL CONTROL VALVE FILTER

Install the oil control valve filter and new gasket with the bolt.

Torque: 29 N·m (300 kgf·cm, 22 ft·lbf)

INSTALLATION

HINT:

- Thoroughly clean all parts to be assembled.
- Before installing the parts, apply fresh engine oil to all sliding and rotating surfaces.
- Replace all gaskets and oil seals with new ones.

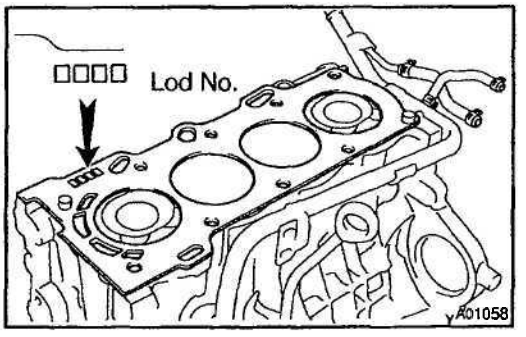

1. PLACE CYLINDER HEAD ON CYLINDER BLOCK

(a) Place a new cylinder head gasket on the cylinder block surface with the Lod No. stamp upward.

NOTICE:

Be careful of the installation direction.

(b) Place the cylinder head quietly in order not to damage the gasket with the bottom part of the head.

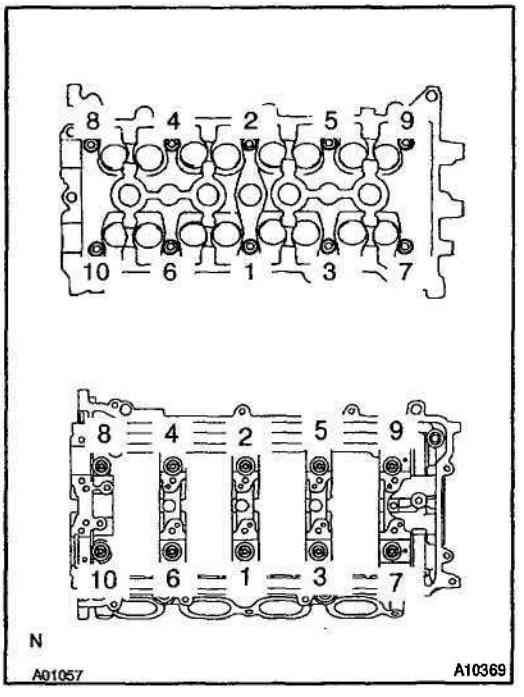

2. INSTALL CYLINDER HEAD BOLTS

HINT:

- The cylinder head bolts are tightened in 2 progressive steps (steps (b) and (d)).
- If any cylinder head bolt is broken or deformed, replace it.

(a) Apply a light coat if engine oil on the threads and under the heads of the cylinder head bolts.

(b) Using a 10 mm bi–hexagon wrench, install and uniformly tighten the 10 cylinder head bolts and plate washers, in several passes, in the sequence shown.

Torque:

1ZZ–FE: 49 N·m (500 kgf·cm, 36 ft·lbf)

2ZZ–GE: 35 N·m (375 kgf·cm, 26 ft·lbf)

If any one of the cylinder head bolts does not meet the torque specification, replace the cylinder head bolt.

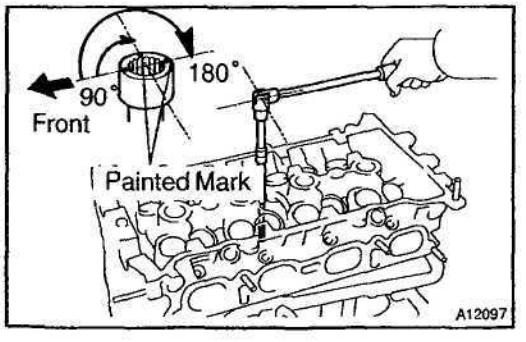

(c) Mark the front of the cylinder head bolt with paint.

(d) 1ZZ-FE:

Retighten the cylinder head bolts 90° in the numerical order shown.

(e) 2ZZ–GE:

Retighten the cylinder head bolts 180° in the numerical order shown.

(f) 1ZZ-FE:

Check that the paint mark is not at a 90° angle to the front.

(g) 2ZZ–GE:
Check that the paint mark is not at a 180° angle to the front.

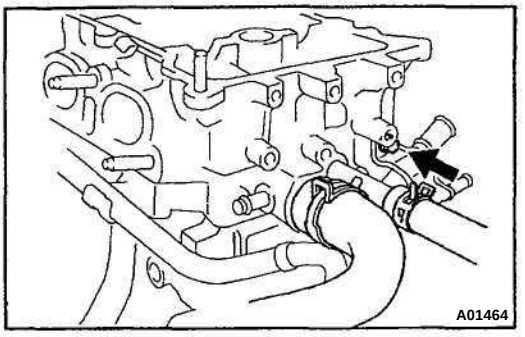

(h) Install the bolt holding the water bypass pipe to the cylinder head.
Torque: 9.0 N·m (92 kgf·cm, 80 in.·lbf)

(i) Connect the upper radiator hose to the water hose unions.

(j) Connect the heater hose to the water hose unions.

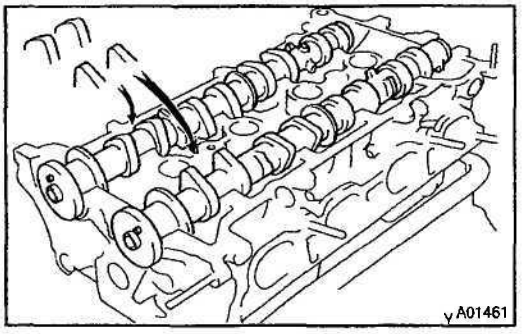

3. INSTALL CAMSHAFTS

(a) Place the 2 camshafts on the cylinder head with the No. 1 cam lobes facing as shown the illustration.

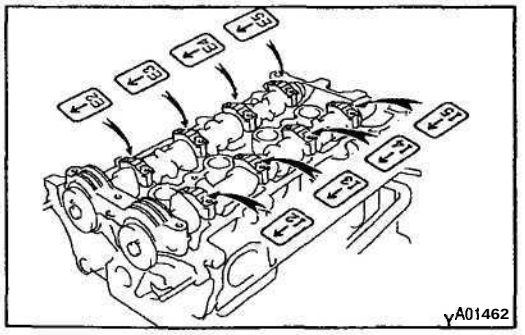

(b) Install the bearing caps in their proper locations.
HINT:

- 1ZZ-FE:
  No. 3 camshaft bearing cap has a number and front mark.
- 2ZZ–GE:
  No. 2, No.3 camshaft bearing cap has a number and front mark.

(c) Apply a light coat of engine oil on the threads and under the heads of the bearing cap bolts.

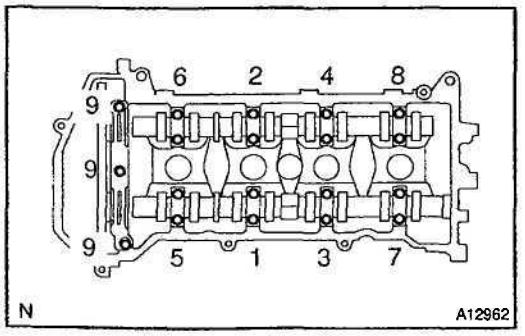

(d) 1ZZ-FE:
Install and uniformly tighten the 19 bearing cap bolts.
After tightening the No. 1 camshaft bearing cap, tighten then in several passes, in the sequence shown.
Torque:
No. 1 23 N·m (235 kgf·cm, 17 ft·lbf)
No. 3 13 N·m (133 kgf·cm, 10 ft·lbf)

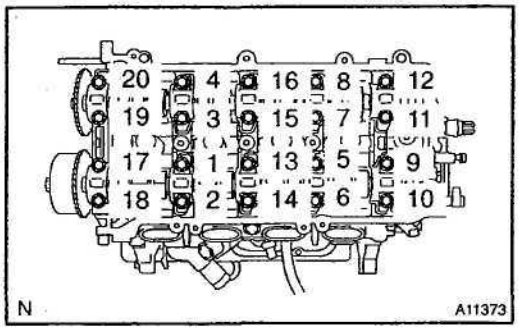

(e) 2ZZ–GE:
Install and uniformly tighten the 20 bearing cap bolts. After tightening the No. 1 camshaft bearing cap, tighten then in several passes, in the sequence shown.
Torque: 18.5 N·m (189 kgf·cm, 14 ft·lbf)

4. **CHECK AND ADJUST VALVE CLEARANCE (See page EM–4)**
5. **INSTALL CAMSHAFT TIMING SPROCKETS AND VALVE TIMING CONTROLLER ASSEMBLY (See page EM–25)**
6. **INSTALL OIL FILTER CAP**
7. **INSTALL GROMMET AND PCV VALVE**
8. **INSTALL ECT SENSOR (See page SF–63)**
9. **INSTALL CAMSHAFT POSITION SENSOR (See page IG–10)**

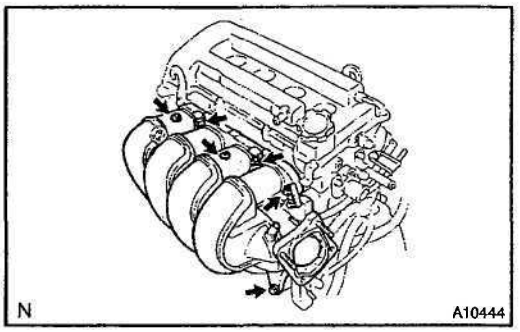

10. 1ZZ-FE:
INSTALL INTAKE MANIFOLD

(a) Install a new gasket, the intake manifold with the 4 bolts and 2 nuts.
Torque: 18.5 N·m (189 kgf·cm, 14 ft·lbf)
(b) Connect the brake booster vacuum hose.
(c) Connect the EVAP hose for ORVR.

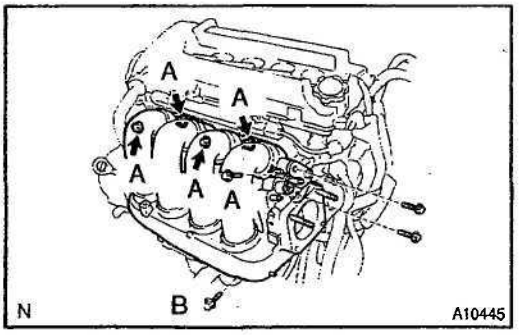

11. 2ZZ–GE:
INSTALL INTAKE MANIFOLD

(a) Install the intake manifold insulator to the cylinder block.
(b) Install a new gasket, the intake manifold with the 4 bolts and 2 nuts.
Torque:
A: 27 N·m (275 kgf·cm, 20 tt-lbf)
B: 46 N·m (469 kgf·cm, 34 ft·lbf)
(c) Install the stay with the 2 bolts and nut.
Torque: 24 N·m (245 kgf·cm, 18 ft·lbf)
(d) Install the oil dipstick and guide with the bolt.
Torque: 25 N·m (255 kgf·cm, 18 ft·lbf)
(e) Connect the brake booster vacuum hose.
(f) Connect the EVAP hose for ORVR.

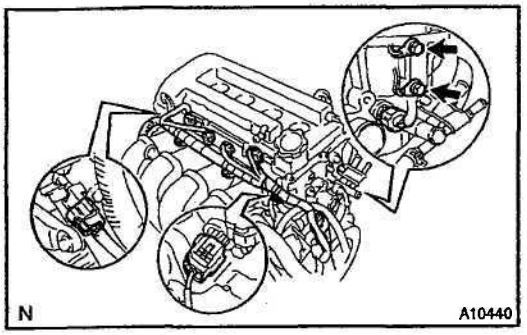

12. 1ZZ-FE:
CONNECT ENGINE WIRE TO CYLINDER HEAD

(a) Connect the 2 clamps of engine wire to the intake manifold.
(b) Connect the 2 ground cables.
(c) Connect the oil control valve for VVT connector.
(d) Connect the camshaft position sensor connector.
(e) Connect the ECT sensor connector.

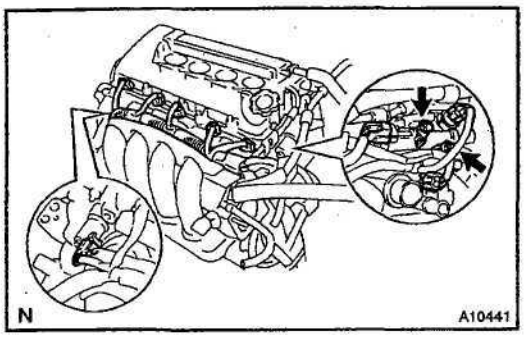

13. 2ZZ–GE:
CONNECT ENGINE WIRE TO CYLINDER HEAD

(a) Install the intake manifold insulator No. 2.
(b) Connect the 2 ground cables.
(c) Connect the oil pressure switch connector.
(d) Connect the oil control valve for VVT connector.
(e) Connect the oil control valve for VVTL connector.
(f) Connect the camshaft position sensor connector.
(g) Connect the ECT sensor connector.
(h) Install the accelerator cable bracket with the 2 bolts.

14. INSTALL INJECTORS (See page SF–24)
15. INSTALL THROTTLE BODY (See page SF–39)
16. INSTAL PCV HOSES
17. INSTALL SPARK PLUGS (See page IG–1)
18. INSTALL IGNITION COIL (See page IG–7)

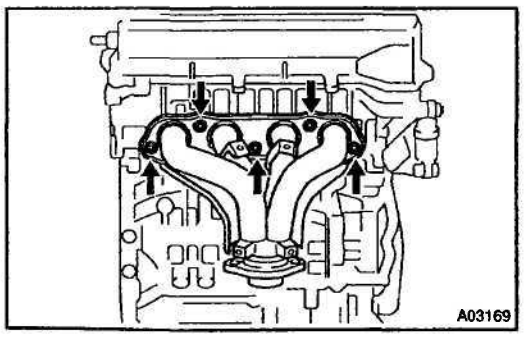

19. 1ZZ–FE:
INSTALL EXHAUST MANIFOLD

(a) Install the lower heat insulator with the 3 bolts.
Torque: 12 N·m (123 kgf·cm, 9 ft·lbf)
(b) Install a new gasket, and the exhaust manifold with the 5 nuts. Uniformly tighten the nuts in several passes.
Torque: 37 N·m (377 kgf·cm, 27 ft·lbf)
(c) Install the upper heat insulator with the 6 bolts.
Torque: 12 N·m (123 kgf·cm, 9 ft·lbf)

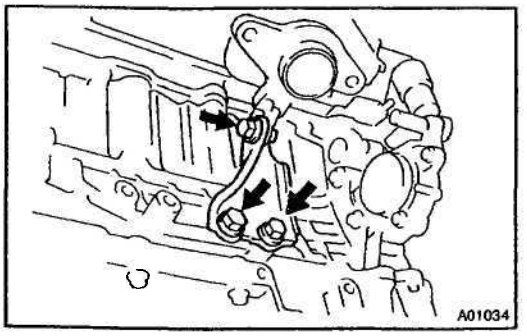

(d) Install the exhaust manifold stay with the 3 bolts.
Torque: 49 N·m (500 kgf·cm, 37 ft·lbf)

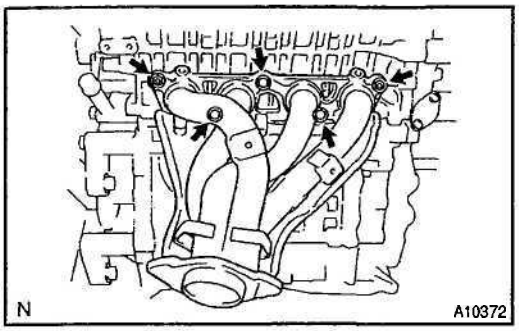

20. 2ZZ–GE:
INSTALL EXHAUST MANIFOLD

(a) Install the lower heat insulator with the 4 bolts.
Torque: 20 N·m (204 kgf·cm, 15 ft·lbf)

(b) Install the exhaust manifold with the 3 bolts and 2 nuts.
Torque: 50 N·m (510 kgf·cm, 37 ft·lbf)

(c) Install the upper heat insulator with the 5 bolts.
Torque: 20 N·m (204 kgf·cm, 15 ft-lbf)

(d) Install the exhaust manifold stay withe 4 bolts.
Torque: 50 N·m (510 kgf·cm, 37 ft-lbf)

21. INSTALL EXHAUST PIPE (See page EM–80)
22. INSTALL GENERATOR AND DRIVE BELT (See page CH–17)
23. CONNECT ACCELERATOR CABLE
24. INSTALL AIR CLEANER ASSEMBLY
25. INSTALL ECM BOX (See page EM–80)
26. INSTALL BATTERY
27. FILL WITH ENGINE COOLANT (See page CO–2)
28. START ENGINE AND CHECK FOR LEAKS
29. RECHECK ENGINE COOLANT LEVEL AND OIL LEVEL

ENGINE UNIT

COMPONENTS

EM15Z-01

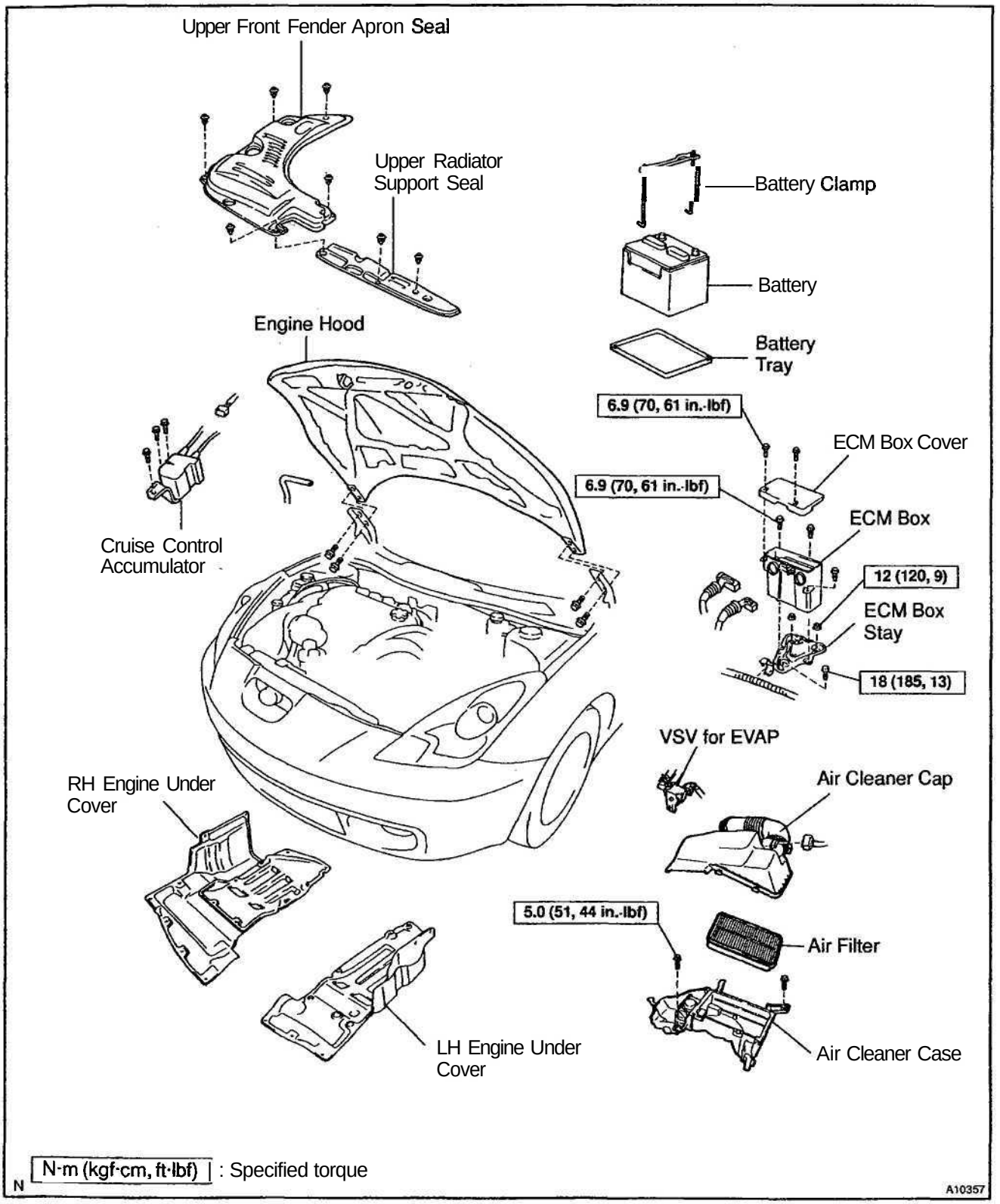

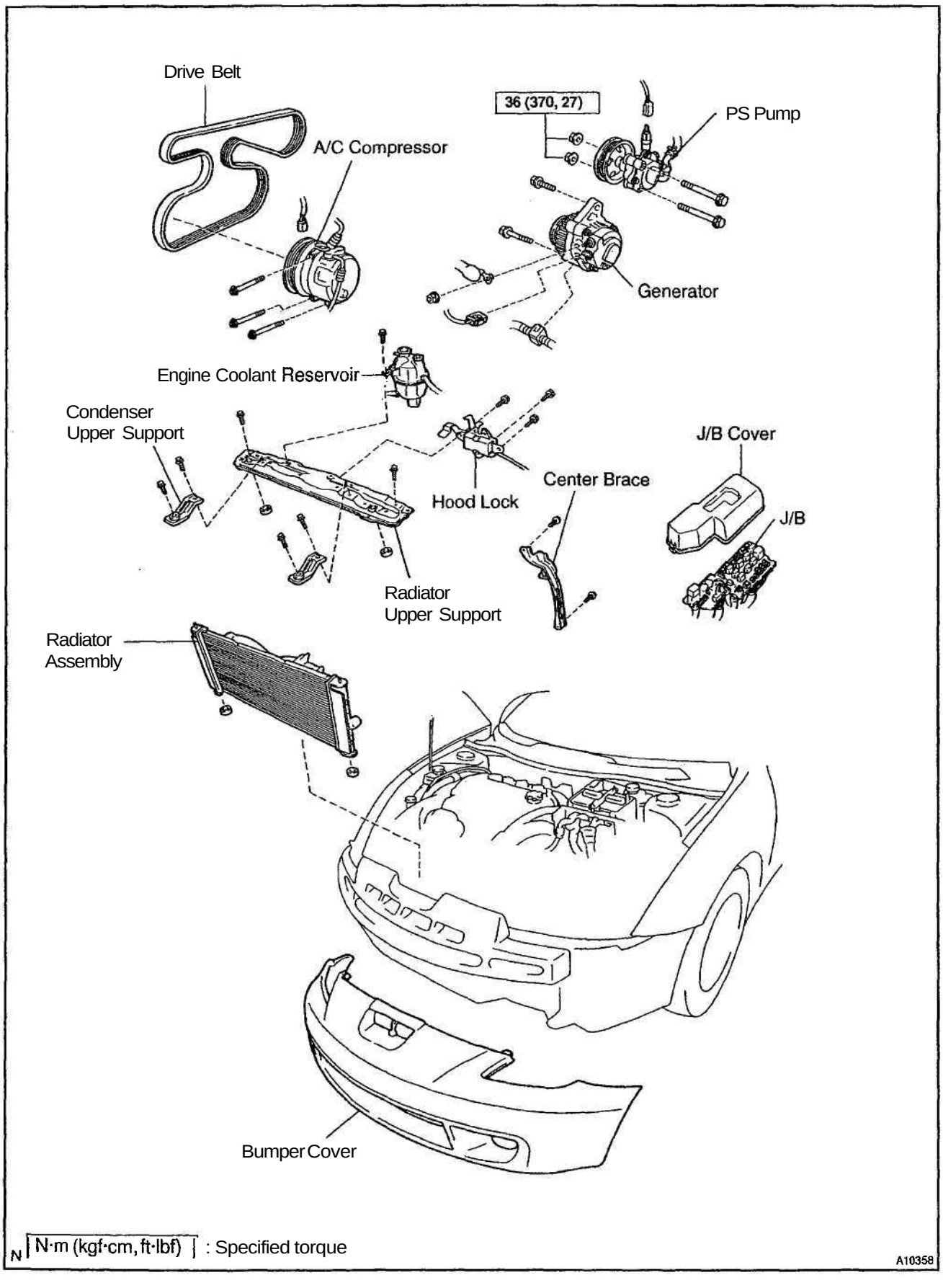
Drive Belt
36 (370, 27)
PS Pump
A/C Compressor
Generator
Engine Coolant Reservoir
Condenser
Upper Support
J/B Cover
Center Brace
Hood Lock
J/B
Radiator
Upper Support
Radiator
Assembly
Bumper Cover
N·m (kgf·cm, ft·lbf) : Specified torque
A10358

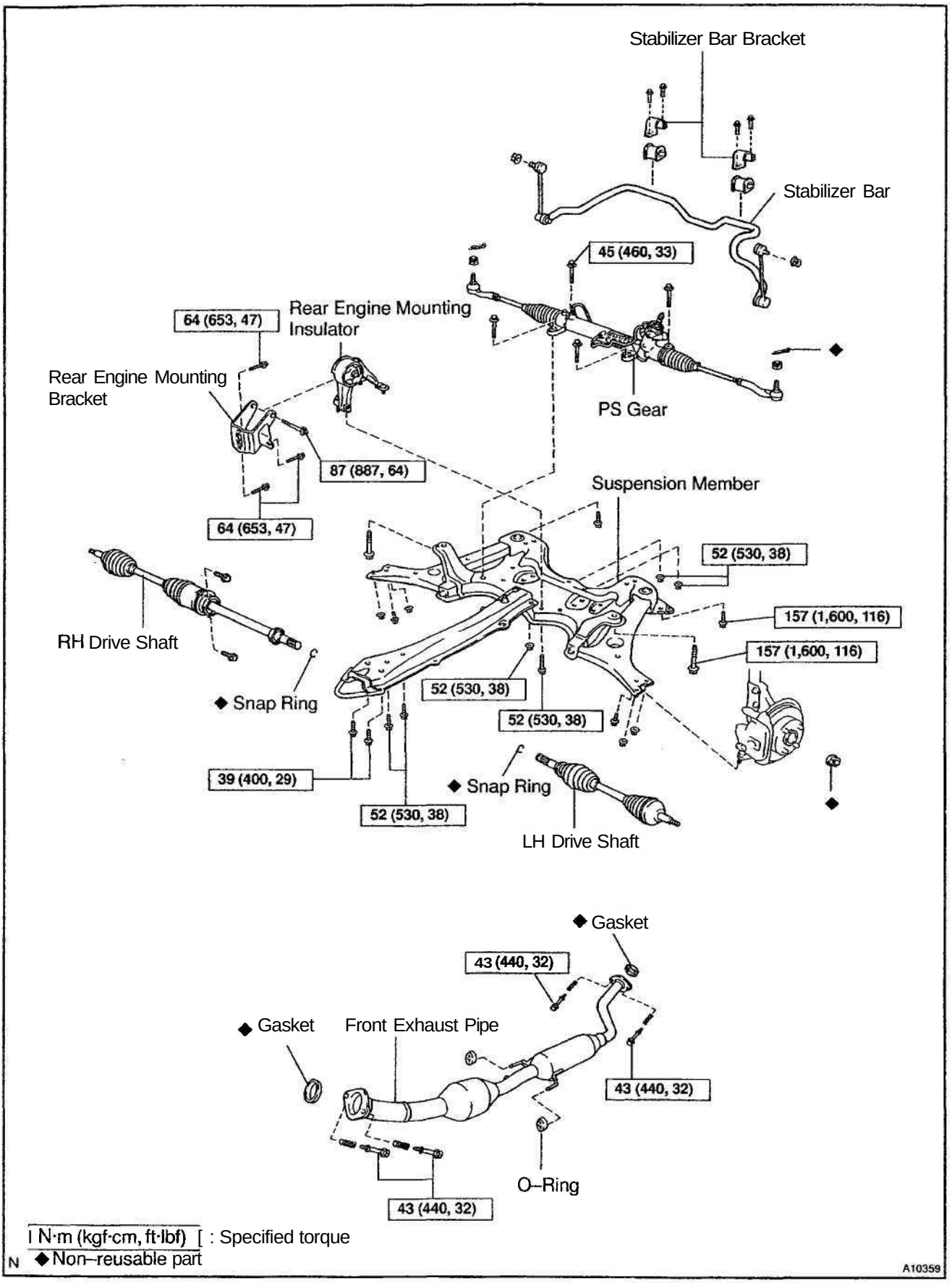
Stabilizer Bar Bracket
Stabilizer Bar
45 (460, 33)
64 (653, 47)
Rear Engine Mounting Insulator
Rear Engine Mounting Bracket
PS Gear
87 (887, 64)
64 (653, 47)
Suspension Member
52 (530, 38)
157 (1,600, 116)
157 (1,600, 116)
RH Drive Shaft
◆ Snap Ring
52 (530, 38)
52 (530, 38)
39 (400, 29)
◆ Snap Ring
52 (530, 38)
LH Drive Shaft
◆ Gasket
43 (440, 32)
◆ Gasket
Front Exhaust Pipe
43 (440, 32)
O–Ring
43 (440, 32)
N·m (kgf·cm, ft·lbf) [: Specified torque
◆ Non–reusable part
A10359

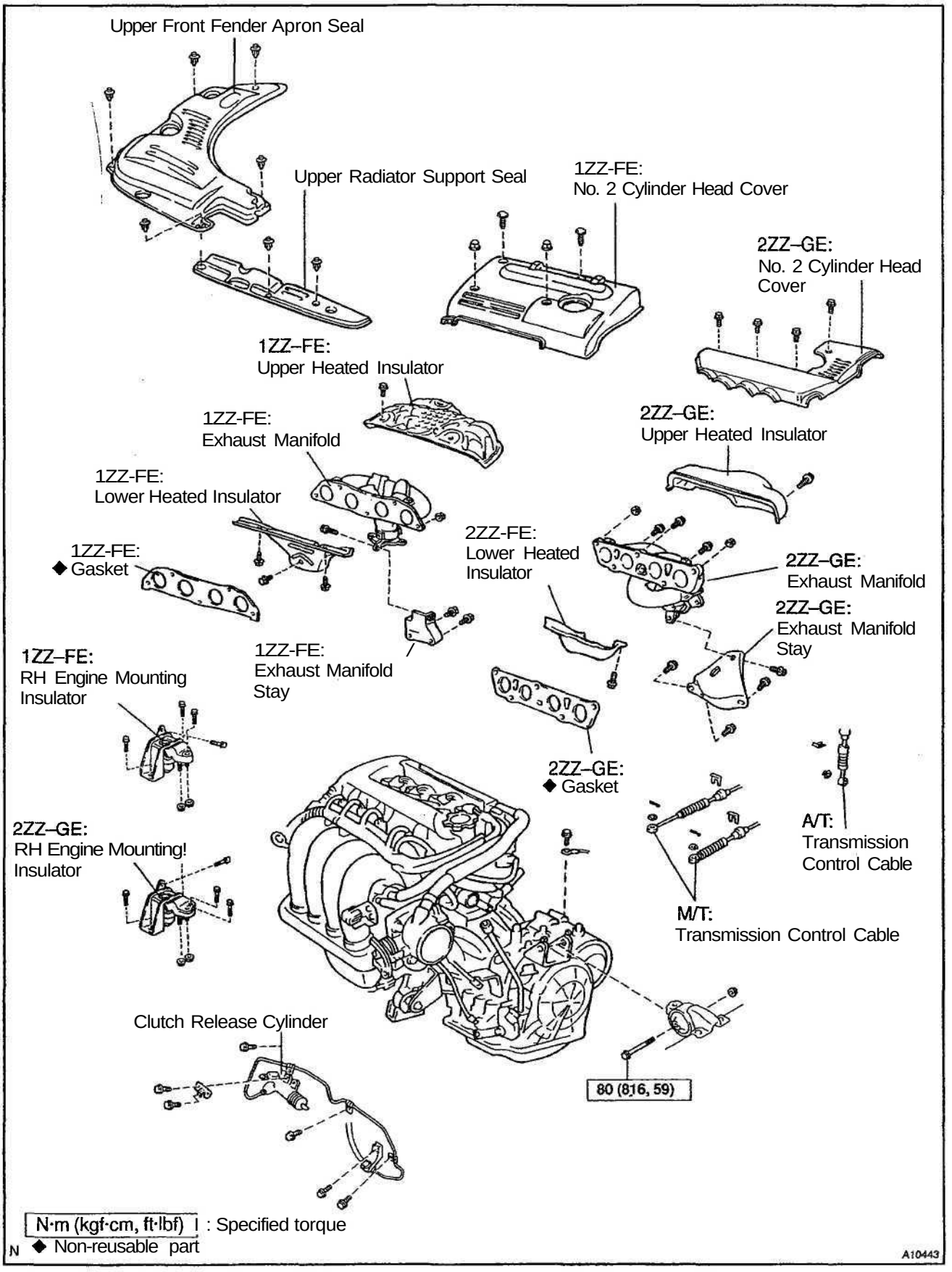
Upper Front Fender Apron Seal
Upper Radiator Support Seal
1ZZ-FE:
No. 2 Cylinder Head Cover
2ZZ–GE:
No. 2 Cylinder Head Cover
1ZZ–FE:
Upper Heated Insulator
1ZZ-FE:
Exhaust Manifold
2ZZ–GE:
Upper Heated Insulator
1ZZ-FE:
Lower Heated Insulator
2ZZ-FE:
Lower Heated Insulator
1ZZ-FE:
◆ Gasket
2ZZ–GE:
Exhaust Manifold
2ZZ–GE:
Exhaust Manifold Stay
1ZZ–FE:
Exhaust Manifold Stay
1ZZ–FE:
RH Engine Mounting Insulator
2ZZ–GE:
◆ Gasket
A/T:
Transmission Control Cable
2ZZ–GE:
RH Engine Mounting! Insulator
M/T:
Transmission Control Cable
Clutch Release Cylinder
80 (816, 59)
N·m (kgf·cm, ft·lbf) : Specified torque
◆ Non-reusable part
A10443

EM160-01

REMOVAL

1. REMOVE BATTERY AND TRAY
2. REMOVE HOOD
3. REMOVE ENGINE UNDER COVERS
4. DRAIN ENGINE COOLANT
5. DRAIN ENGINE OIL
6. DRAIN TRANSAXLE OIL
7. REMOVE BUMPER COVER AND HEAD LIGHT

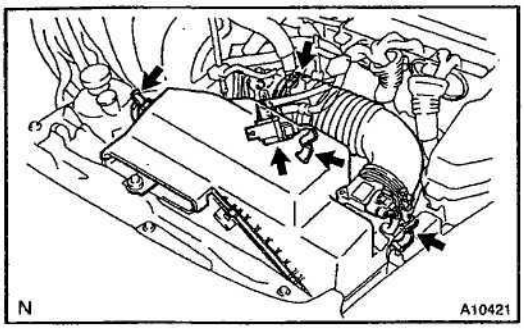

8. REMOVE AIR CLEANER CAP

(a) Disconnect the MAF meter connector.
(b) Disconnect the VSV for EVAP.
(c) Disconnect the 2 hoses.
(d) Disconnect the 3 clamps, and disconnect the air cleaner cap from the air cleaner case.
(e) Loosen the hose clamp, and disconnect the air cleaner hose from the throttle body.

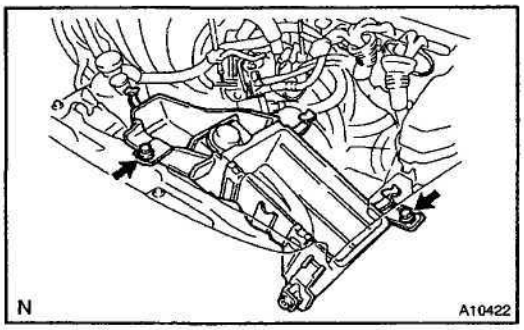

9. REMOVE AIR CLEANER CASE

(a) Remove the air filter.
(b) Disconnect the hose from the VSV for Canister Closed VALVE (CVC).
(c) Disconnect the hose from the intake air control valve.
(d) Remove the 2 bolts, and disconnect the air cleaner case.
(e) Disconnect the 2 hoses from the air cleaner case.

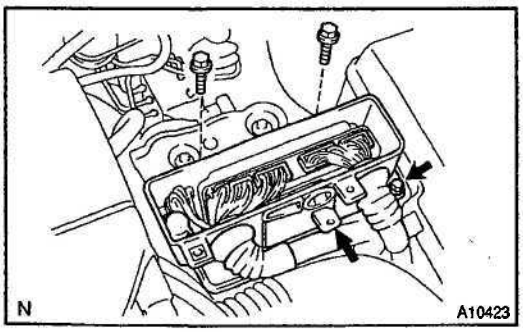

10. REMOVE ECM BOX

(a) Remove the 2 bolts and ECM cover.
(b) Disconnect the 4 connectors from the ECM.
(c) Disconnect the 2 connectors from the ECM box.
(d) Remove the ECM from the ECM box.
(e) Disconnect the clamp from the ECM box.
(f) Disconnect the 2 engine wires from the ECM box.
(g) Remove the 3 bolts and ECM box.

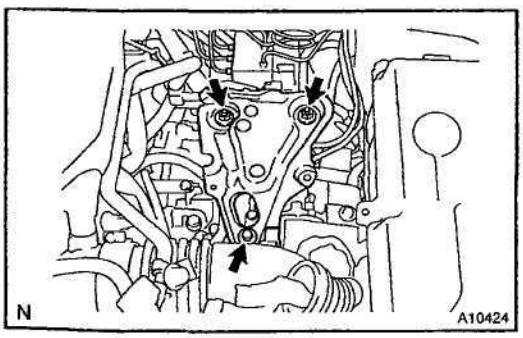

(h) Remove the 2 nuts, bolt and ECM box stay.

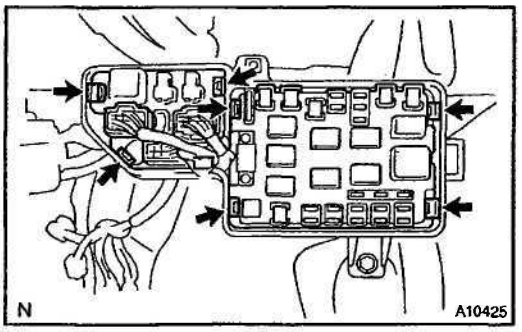

11. DISCONNECT ENGINE WIRE FROM ENGINE COMPARTMENT RELAY BOX

(a) Remove the relay box upper cover.
(b) Disconnect the 3 connectors.
(c) Disconnect the 7 claws and J/B from the relay box.

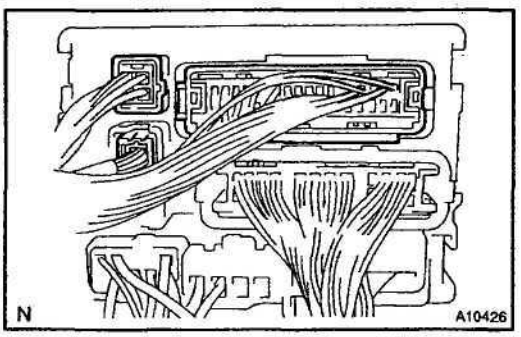

(d) Disconnect the 3 connectors.
(e) Disconnect the engine wire from the relay box.

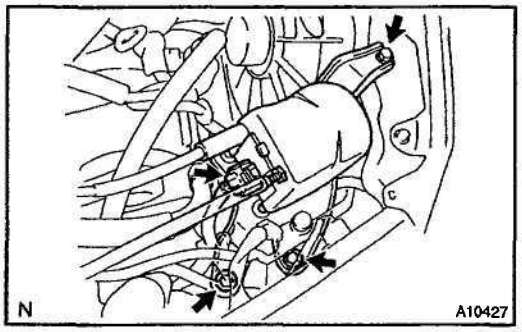

12. w/ Cruise Control System:
DISCONNECT CRUISE CONTROL ACTUATOR

(a) Disconnect the actuator connector.
(b) Remove the 3 bolts and disconnect the actuator from the body.

13. REMOVE RADIATOR ASSEMBLY (See page CO–17)

14. REMOVE DRIVE BELT AND GENERATOR (See page CH–7)

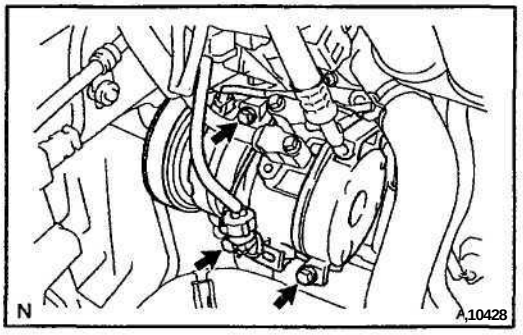

15. w/ A/C:
DISCONNECT A/C COMPRESSOR

(a) Disconnect the A/C compressor connector.
(b) Remove the 3 bolts, and disconnect the A/C compressor from the engine.

HINT:
Suspend the A/C compressor securely.

16. DISCONNECT TUBE AND HOSE

(a) Disconnect the fuel tube from the fuel pipe on vehicle side.
(b) Disconnect the 2 heater hoses from the engine side.
(c) Disconnect the brake booster vacuum hose.

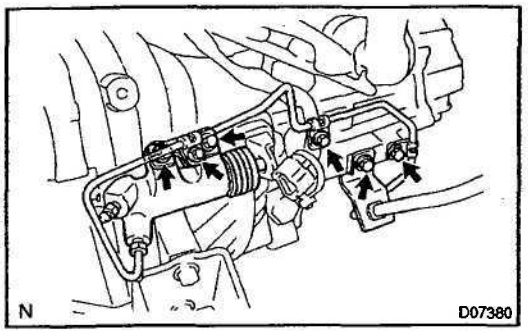

17. M/T:
DISCONNECT CLUTCH RELEASE CYLINDER

(a) Remove the 3 bolts, and disconnect the brackets from the transaxle.
(b) Remove the 2 bolts, and disconnect the release cylinder from the transaxle.

18. DISCONNECT TRANSAXLE CONTROL CABLE (S)
19. DISCONNECT 2 GROUND CABLES
20. REMOVE DRIVE SHAFT (See page SA–20)

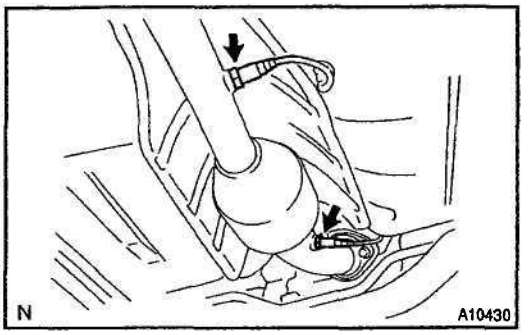

21. REMOVE EXHAUST PIPE

(a) Disconnect the 2 heated oxygen sensor.

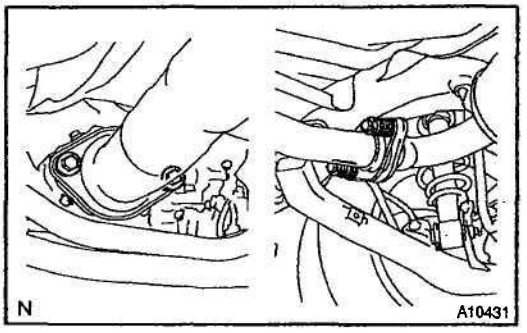

(b) Remove the 4 bolts and springs.
(c) Disconnect the 2 O–rings, and remove the exhaust pipe and 2 gaskets.

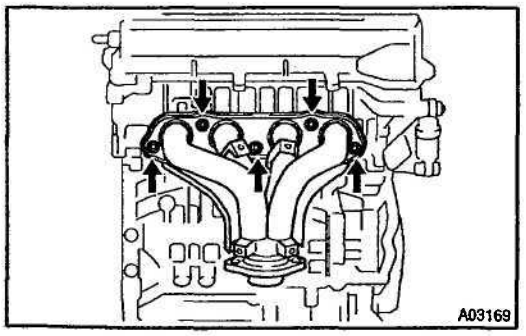

22. 1ZZ–FE:
REMOVE EXHAUST MANIFOLD

(a) Remove the 6 bolts and upper heat insulator.
(b) Remove the 3 bolts and exhaust manifold stay.
(c) Remove the 5 nuts, exhaust manifold and gasket.

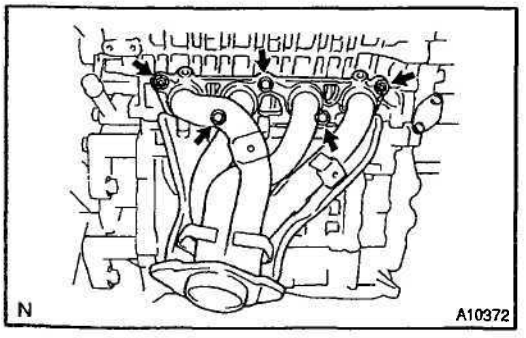

23. 2ZZ–GE:
REMOVE EXHAUST MANIFOLD

(a) Remove the 5 bolts and upper heat insulator.
(b) Remove the 4 bolts and exhaust manifold stay.
(c) Remove the 2 nuts, 3 bolts, exhaust manifold and gasket.

24. DISCONNECT PS PUMP

(a) Disconnect the PS oil pressure switch connector.

(b) Remove the 2 nuts and through bolts, and disconnect the PS pump from the engine (See page SR–24).

HINT:

Put aside the pump and suspend it to the cowl with a string.

25. REMOVE STABILIZER BAR BRACKET
(See page SA–51)

26. DISCONNECT PS GEAR

Remove the 4 bolts, and disconnect the PS gear from the suspension member.

HINT:

Suspend the PS gear securely.

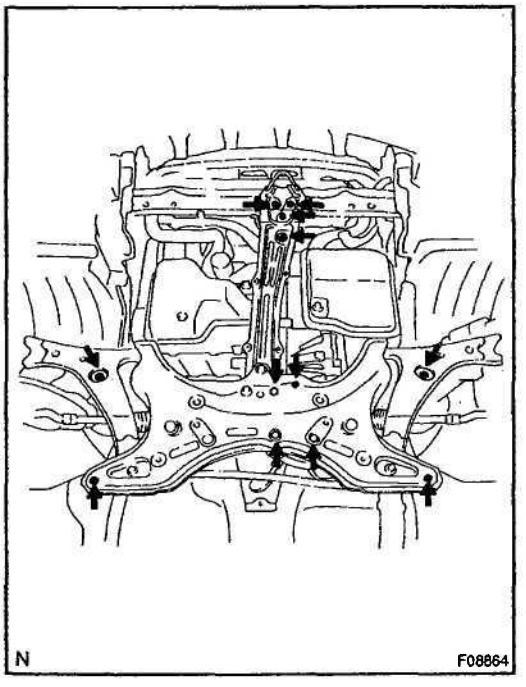

27. REMOVE SUSPENSION MEMBER

Remove the 9 bolts, 3 nuts and suspension member.

28. ATTACH ENGINE SLIDING DEVICE TO ENGINE HANGER

(a) Remove the 4 bolts and No. 2 cylinder head cover.

(b) Disconnect the PCV hoses from the cylinder head cover.

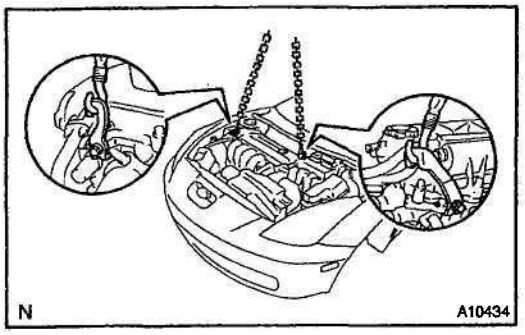

(c) Install the 2 engine hangers in the correct direction.

Engine hanger part No.:
1ZZ-FE
Front: 12281-22021
Rear: 12281-15040 or 12281-15050
Bolt: 91512–B1016
2ZZ–GE
Front: 12281–88600
Rear: 12282–88600
Bolt: 91512–61020
Torque: 38 N·m (388 kgf·cm, 28 ft·lbf)

(d) Attach the engine sling device to the engine hangers.

CAUTION:
Do not attempt to hang the engine by hooking the chain to any other part.

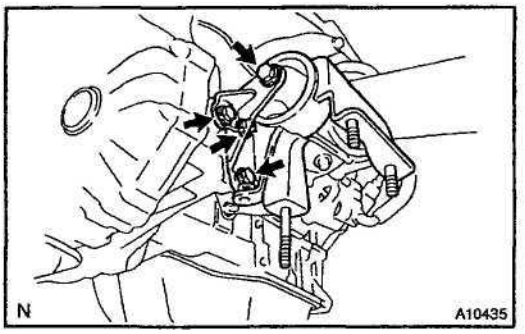

29. REMOVE REAR ENGINE MOUNTING

(a) Remove the through bolt and rear engine mounting insulator.

(b) Remove the 3 bolts and rear engine mounting bracket.

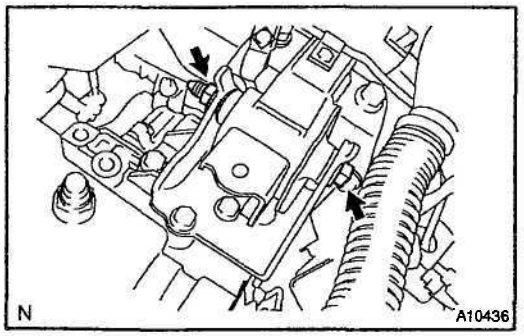

30. REMOVE ENGINE AND TRANSAXLE ASSEMBLY

(a) Remove the LH engine mounting through bolt and nut.

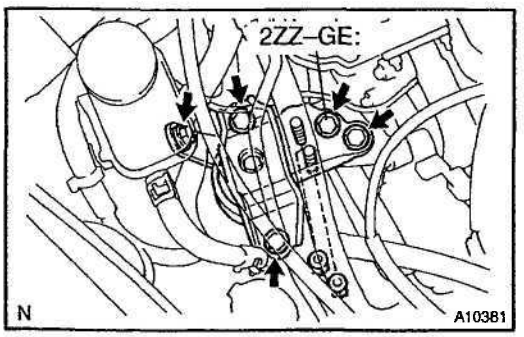

(b) 1ZZ-FE:
Remove the 4 bolts, 2 nuts and RH engine mounting insulator.

(c) 2ZZ–GE:
Remove the 5 bolts, 2 nuts and RH engine mounting insulator.

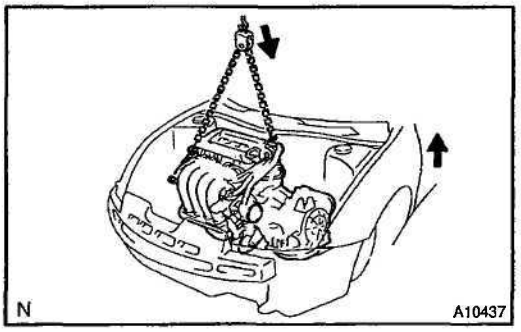

(d) Lower the engine out of vehicle slowly and carefully, and raise the vehicle.

HINT:

Make sure the engine is clear of all wiring, hoses and cables.

(e) Place the engine and transaxle assembly onto the stand.

31. SEPARATE ENGINE AND TRANSAXLE

(C56 M/T: See page MX–4)
(C60 M/T: See page MX–4)
(U240E A/T: See page AX–31)
(U341E A/T: See page AX–31)

INSTALLATION

1. ASSEMBLY ENGINE AND TRANSAXLE

(C56 M/T: See page MX–8)
(C60 M/T: See page MX–8)
(U240E A/T: See page AX–35)
(U341E A/T: See page AX–35)

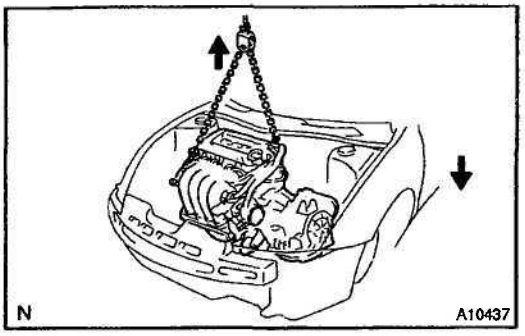

2. INSTALL ENGINE AND TRANSAXLE ASSEMBLY IN VEHICLE

(a) Attach the engine sling device to the engine hangers.
(b) Slowly lower the vehicle, and raise the engine into the engine compartment.
(c) Keep the engine level, and align RH and LH mountings with the body bracket.

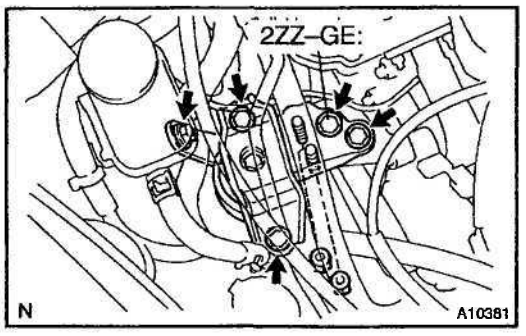

(d) 1ZZ–FE:
Install the RH engine mounting insulator with the 4 bolts and 2 nuts.
Torque: 52 N·m (530 kgf·cm, 38 ft·lbf)

(e) 2ZZ–GE:
Install the RH engine mounting insulator with the 5 bolts and 2 nuts.
Torque: 52 N·m (530 kgf-cm, 38 ft.lbf)

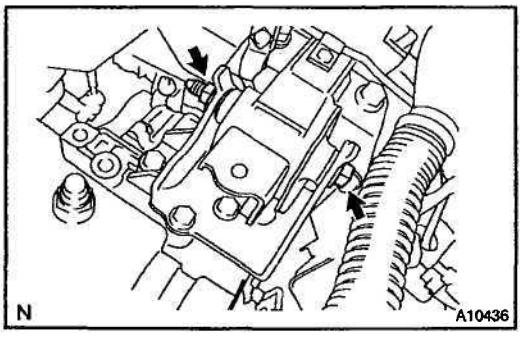

(f) Install the LH engine mounting through bolt and nut.
Torque: 80 N·m (816 kgf·cm, 59 ft·lbf)

3. REMOVE ENGINE SLING DEVICE

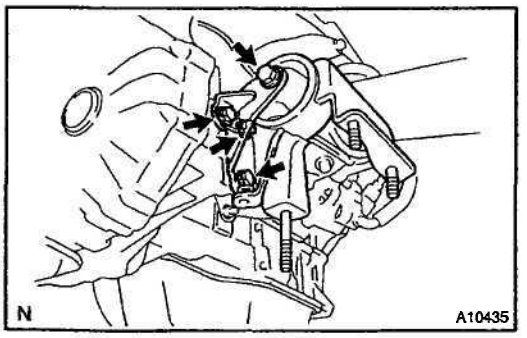

4. INSTALL REAR ENGINE MOUNTING

(a) Install the rear engine mounting bracket with the 3 bolts.
Torque: 64 N·m (653 kgf-cm, 47 tt-lbf)
(b) Temporarily install the rear engine mounting insulator with the through bolt.

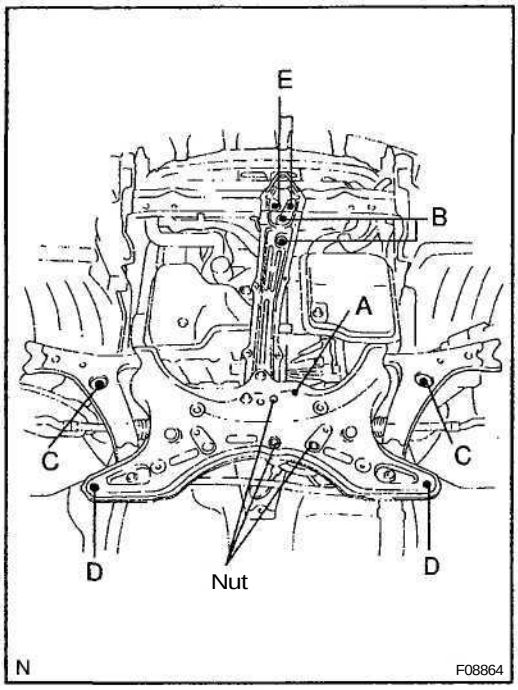

5. INSTALL SUSPENSION MEMBER

(a) Install the suspension member with the 9 bolts and 3 nuts.

Torque:
A 52 N·m (530 kgf·cm, 32 ft·lbf)
B 52 N·m (530 kgf·cm, 32 ft·lbf)
C 157 N·m (1,600 kgf·cm, 116 tt-lbf)
D 157 N·m (1,600 kgf·cm, 116 ft-lbf)
E 39 N·m (400 kgf·cm, 29 ft·lbf)
Nut 52 N·m (530 kgf·cm, 32 ft·lbf)

(b) Tighten the rear engine mounting through bolt.

Torque: 87 N·m (887 kgf·cm, 64 ft-lbf)

6. CONNECT PS GEAR

Install the PS gear with the 4 bolts.

Torque: 45 N·m (460 kgf·cm, 33 fMbf)

7. INSTALL STABILIZER BAR BRACKET

(See page SA-53)

8. CONNECT PS PUMP

(a) Install the PS pump with the 2 through bolts and nuts (See page SR–32).

Torque: 36 N·m (370 kgf·cm, 27 ft·lbf)

(b) Connect the PS oil pressure switch connector.

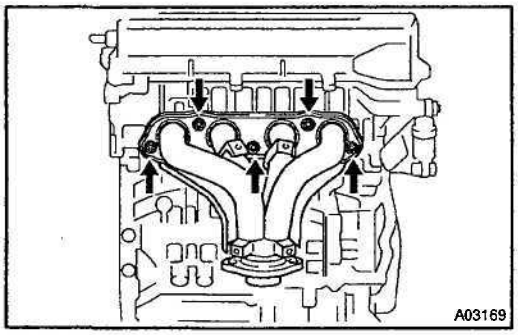

9. 1ZZ-FE:

INSTALL EXHAUST MANIFOLD

(a) Install the gasket and exhaust manifold with the 5 nuts.

Torque: 37 N·m (377 kgf·cm, 27 ft·lbf)

(b) Install the exhaust manifold stay with the 3 bolts.

Torque: 49 N·m (500 kgf·cm, 37ft·lbf)

(c) Install the upper heat insulator with the 6 bolts.

Torque: 12 N·m (123 kgf·cm, 9 fMbf)

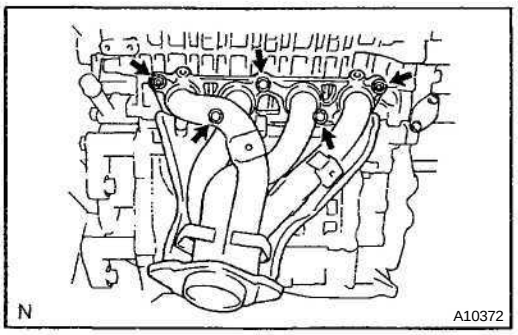

10. 2ZZ–GE:

INSTALL EXHAUST MANIFOLD

(a) Install the gasket and exhaust manifold with the 2 nuts and 3 bolts.

Torque: 50 N·m (510 kgf·cm, 37 ft·lbf)

(b) Install the exhaust manifold stay with the 4 bolts.

Torque: 50 N-m (510 kgf·cm, 37 fMbf)

(c) Install the upper heat insulator with the 5 bolts.

Torque: 20 N·m (204 kgf·cm, 15 ft·lbf)

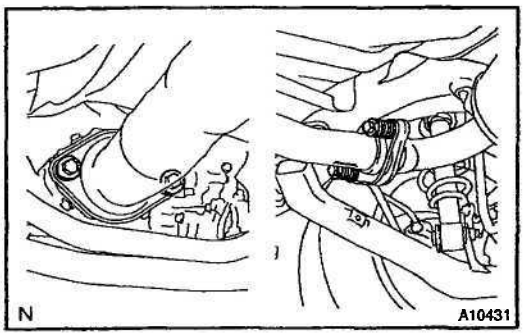

11. **INSTALL EXHAUST PIPE**
(a) Install the 2 gaskets and exhaust pipe.
(b) Connect the 2 O–rings.
(c) Install the 4 springs and bolts.
Torque: 43 N·m (440 kgf·cm, 32 tt-lbf)

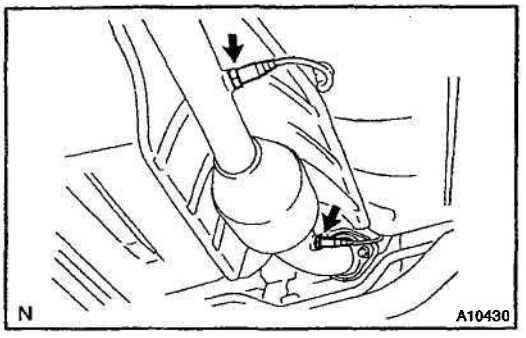

(d) Connect the 2 heated oxygen sensor.
12. **INSTALL DRIVE SHAFT (See page SA–32)**
13. **CONNECT 2 GROUND CABLES**
14. **CONNECT TRANSAXLE CONTROL CABLE (S)**

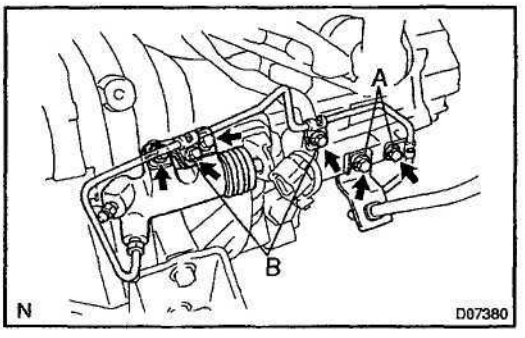

15. **M/T:**
CONNECT CLUTCH RELEASE CYLINDER
(a) Install the release cylinder with the 2 bolts.
Torque: 12 N·m (120 kgf·cm, 9 ft·lbf)
(b) Install the brackets with the 3 bolts.
Torque:
Bolt A 12 N·m (120 kgf·cm, 9 ft-lbf)
Bolt B 4.9 N·m (50 kgf·cm, 43 in.·lbf)
16. **CONNECT TUBE AND HOSE**
(a) Connect the brake booster vacuum hose.
(b) Connect the 2 heater hoses to the engine side.
(c) Connect the fuel tube to the fuel pipe on vehicle side.

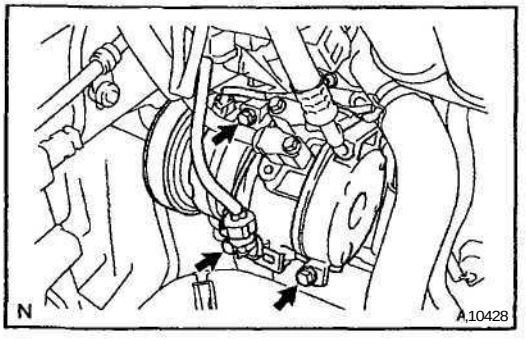

17. **w/ A/C:**
INSTALL A/C COMPRESSOR
(a) Install the A/C compressor with the 3 bolts.
Torque: 25 N·m (255 kgf·cm, 18 ft-lbf)
(b) Connect the A/C compressor connector.
18. **INSTALL GENERATOR AND DRIVE BELT (See page CH–17)**
19. **INSTALL RADIATOR ASSEMBLY (See page CO–23)**

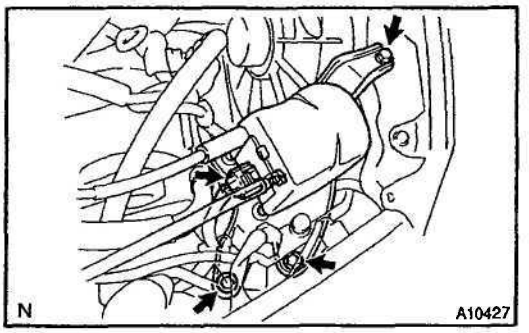

20. w/ Cruise Control System:
INSTALL CRUISE CONTROL ACTUATOR

(a) Install the actuator with the 3 bolts.
(b) Connect the actuator connector.

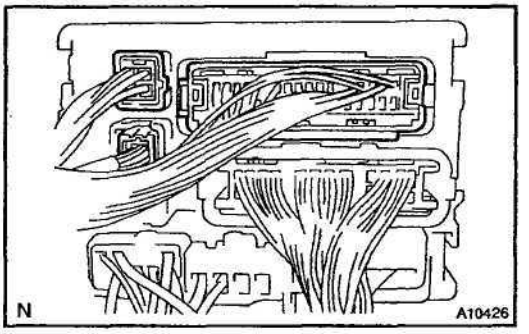

21. CONNECT ENGINE WIRE TO ENGINE COMPARTMENT RELAY BOX

(a) Install the engine wire to the relay box.
(b) Connect the 3 connectors.

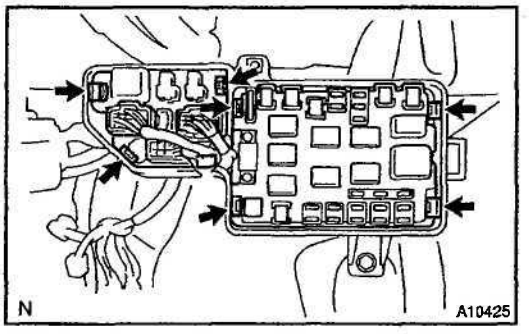

(c) Connect the J/B to the relay box.
(d) Connect the 3 connectors.
(e) Install the relay box upper cover.

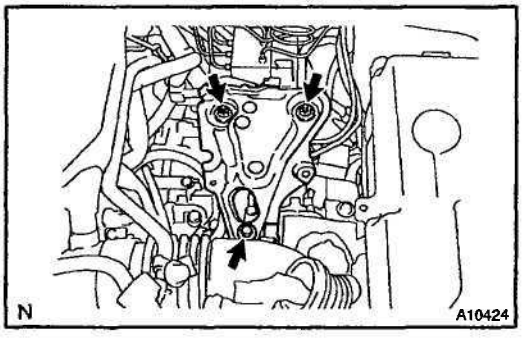

22. INSTALL ECM BOX

(a) Install the ECM box stay with the 2 nuts and bolt.
Torque:
Nut 12 N·m (120 kgf·cm, 9 ft·lbf)
Bolt 18 N·m (185 kgf·cm, 13 ft·lbf)

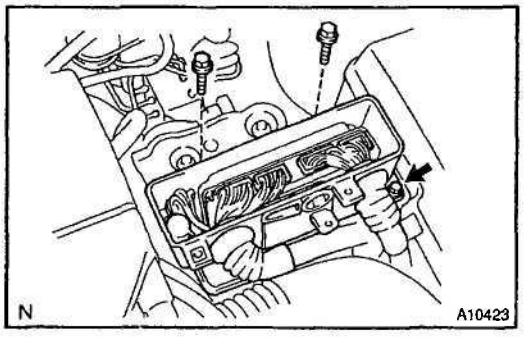

(b) Instal the ECM box with the 3 bolts.
Torque: 6.9 N·m (70 kgf·cm, 61 in.·lbf)
(c) Connect the 2 engine wire to the ECM box.
(d) Connect the clamp to the ECM box.
(e) Install the ECM to the ECM box.
(f) Connect the 2 connectors to the ECM box.
(g) Connect the 4 connectors to the ECM
(h) Install the ECM cover with the 2 bolts.
Torque: 6.9 N·m (70 kgf·cm, 61 in.·lbf)

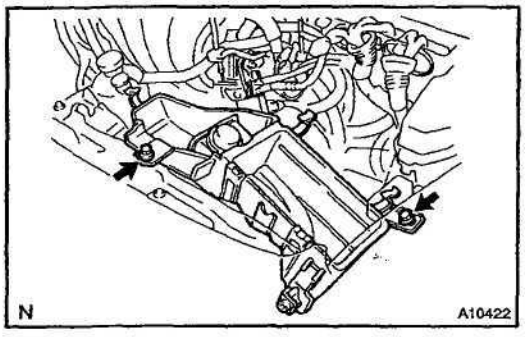

23. INSTALL AIR CLEANER CASE

(a) Connect the 2 hoses to the air cleaner case,
(b) Install the air cleaner case with the 2 bolts.
Torque: 5.0 N·m (51 kgf·cm, 44 in.·lbf)
(c) Connect the hose to the intake air control valve.
(d) Connect the hose to the VSV for canister closed valve (CVC).
(e) Install the air filter.

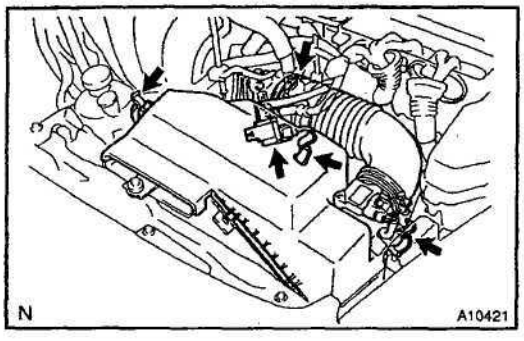

24. INSTALL AIR CLEANER CAP

(a) Install the air cleaner hose to the throttle body with the hose clamp.
(b) Connect the air cleaner cap to the air cleaner case with the 3 clamps.
(c) Connect the 2 hoses.
(d) Connect the VSV for EVAP.
(e) Connect the MAF meter connector.

25. INSTALL HEADLIGHT AND BUMPER COVER
26. INSTALL BATTERY AND TRAY
27. FILL WITH TRANSAXLE OIL
28. FILL WITH ENGINE OIL
29. FILL WITH ENGINE COOLANT (See page CO–2)
30. START ENGINE AND CHECK FOR LEADS
31. PERFORM ENGINE ADJUSTMENT
32. CHECK FRONT WHEEL ALIGNMENT
33. INSTALL ENGINE UNDER COVERS
34. INSTALL ENGINE HOOD
35. ROAD TEST VEHICLE

Check for abnormal noises, shock slippage, correct shift points and smooth operation.

36. RECHECK ENGINE COOLANT AND OIL LEVELS

CYLINDER BLOCK

EM162-01

COMPONENTS

1ZZ-FE:

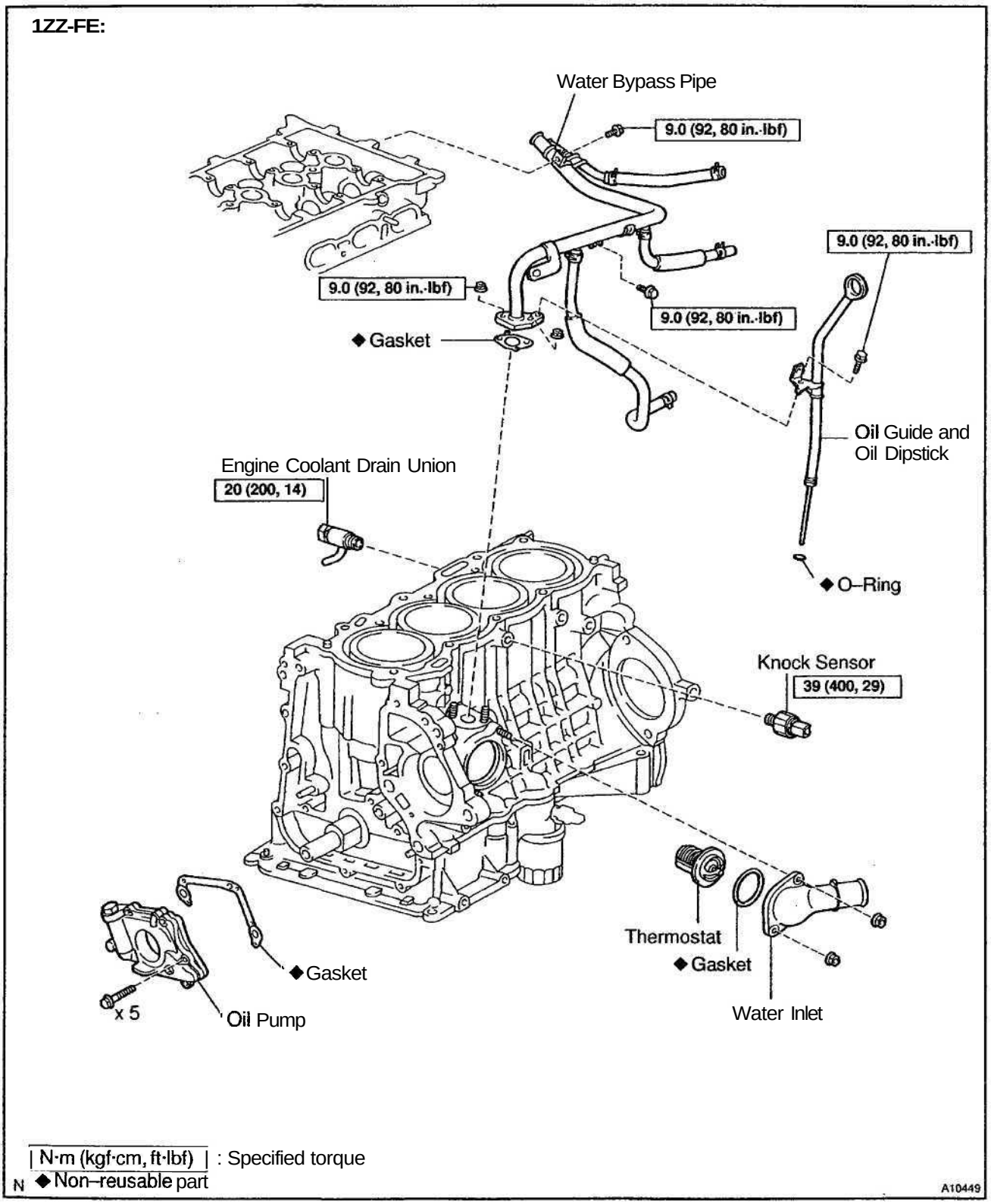

| N·m (kgf·cm, ft·lbf) | : Specified torque

N ◆ Non–reusable part

A10449

2ZZ–GE:

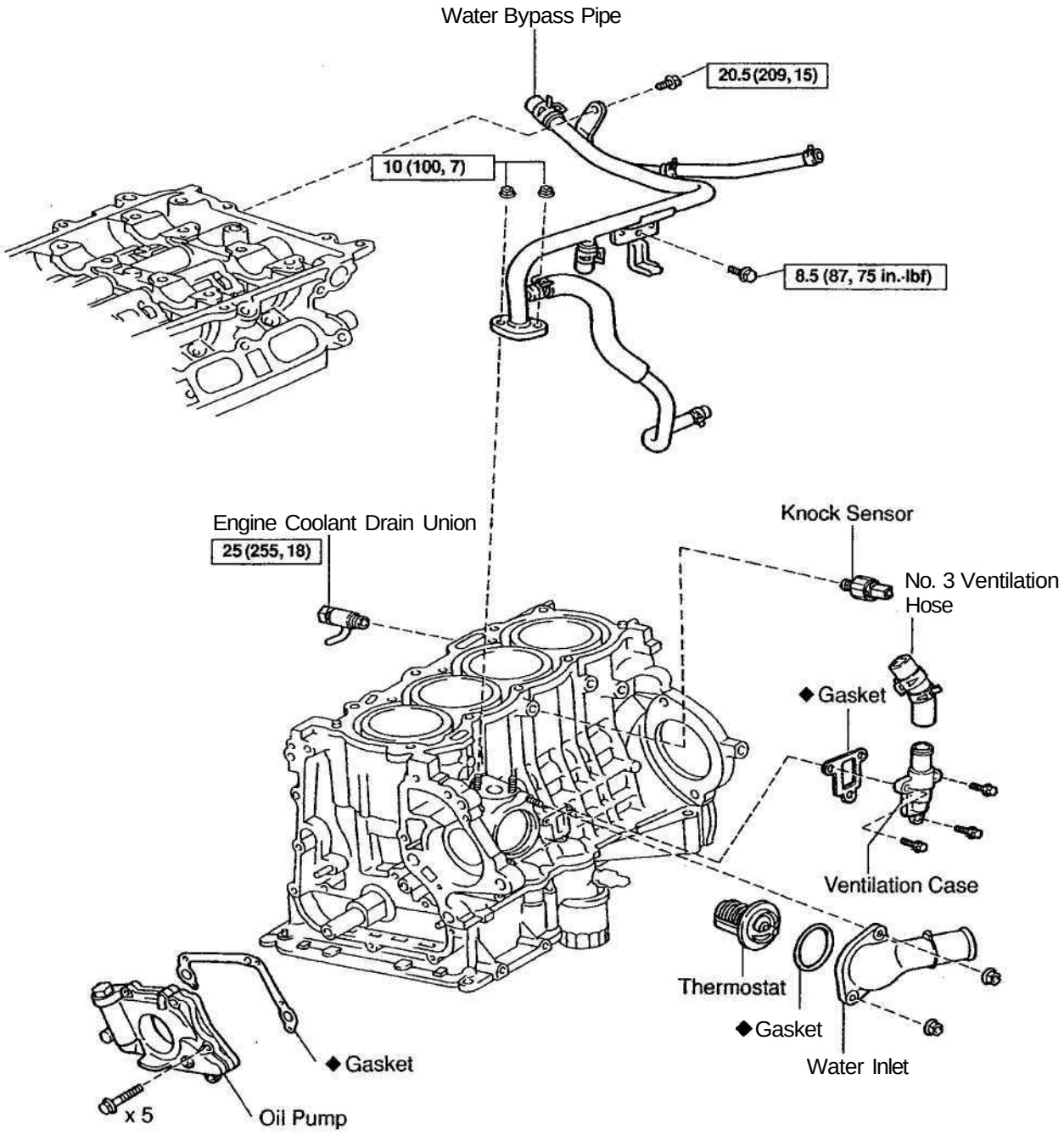

N

N·m (kgf·cm, ft·lbf) : Specified torque

◆ Non-reusable part

A10360

1ZZ-FE:

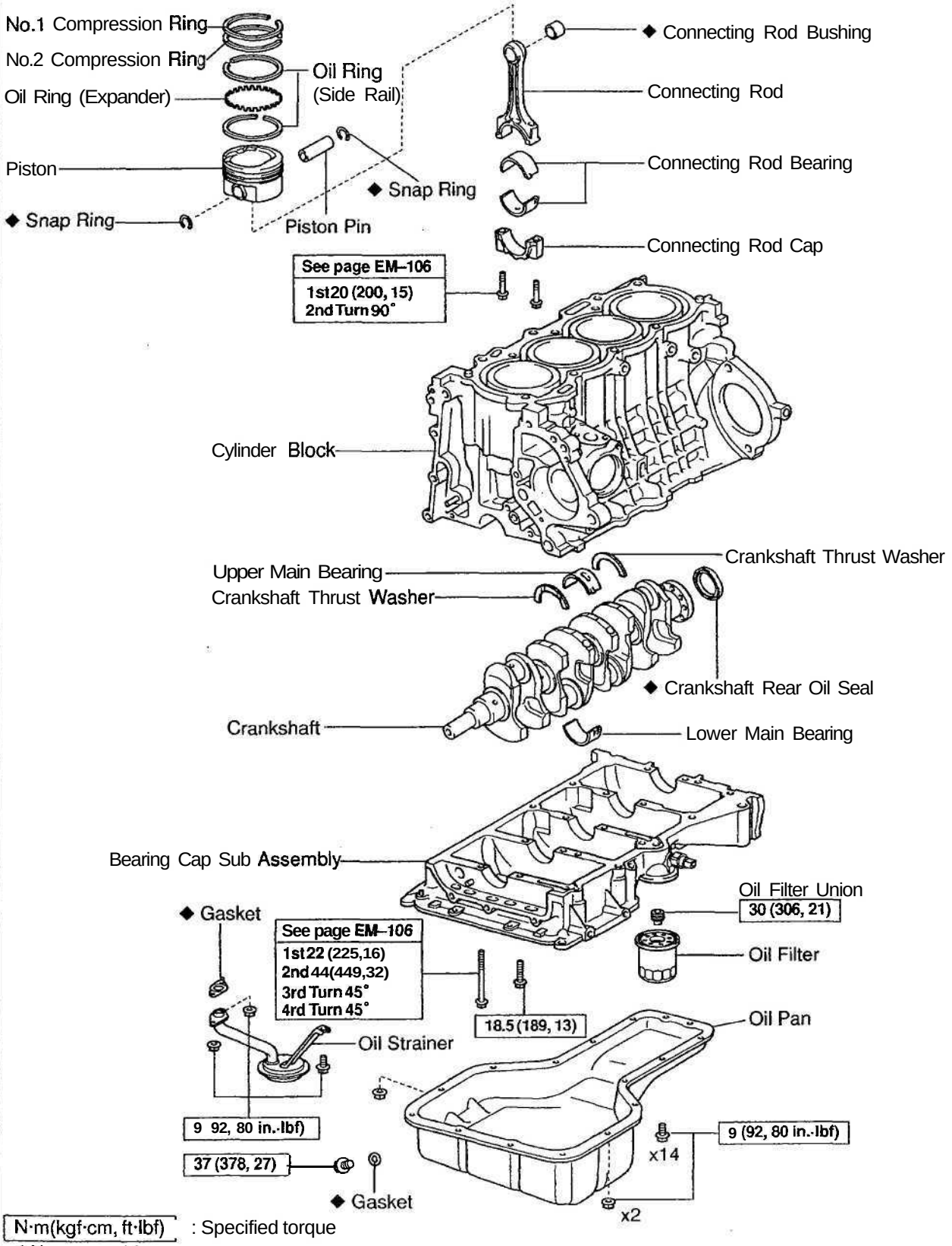

N·m(kgf·cm, ft·lbf) : Specified torque
◆Non–reusable part

YA01210

2ZZ–GE:

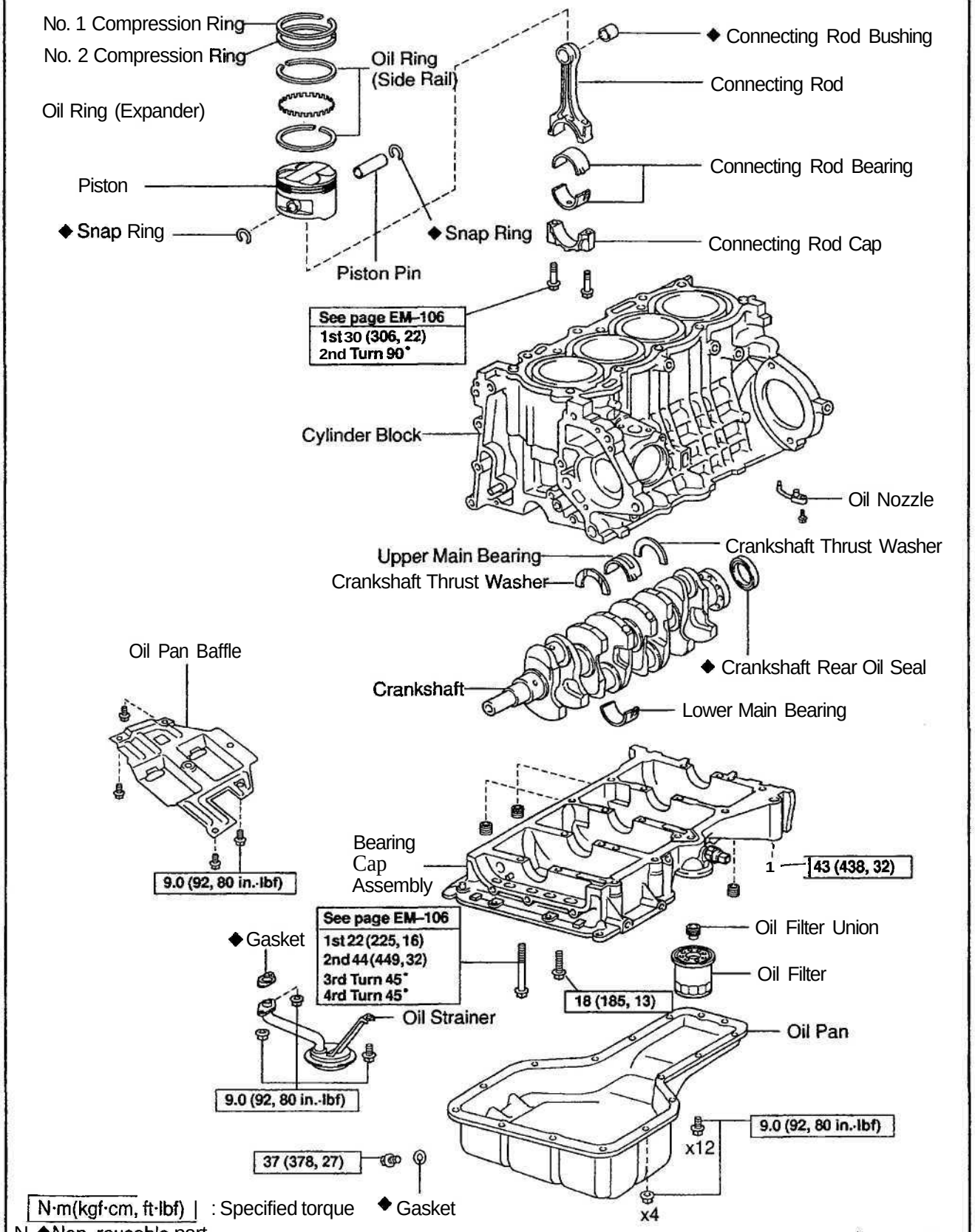
No. 1 Compression Ring
No. 2 Compression Ring
Oil Ring (Side Rail)
Oil Ring (Expander)
Piston
◆ Snap Ring
◆ Snap Ring
Piston Pin
◆ Connecting Rod Bushing
Connecting Rod
Connecting Rod Bearing
Connecting Rod Cap
See page EM–106
1st 30 (306, 22)
2nd Turn 90°
Cylinder Block
Oil Nozzle
Upper Main Bearing
Crankshaft Thrust Washer
Crankshaft Thrust Washer
◆ Crankshaft Rear Oil Seal
Crankshaft
Lower Main Bearing
Oil Pan Baffle
9.0 (92, 80 in.·lbf)
Bearing Cap Assembly
1
43 (438, 32)
See page EM–106
1st 22 (225, 16)
2nd 44 (449, 32)
3rd Turn 45°
4rd Turn 45°
◆ Gasket
Oil Filter Union
Oil Filter
18 (185, 13)
Oil Strainer
Oil Pan
9.0 (92, 80 in.·lbf)
9.0 (92, 80 in.·lbf)
x12
37 (378, 27)
x4
N·m(kgf·cm, ft·lbf) : Specified torque
◆ Gasket
N ◆Non–reusable part
A10361

EM163-01

DISASSEMBLY

1. **M/T:**
   REMOVE FLYWHEEL
2. **A/T:**
   REMOVE DRIVE PLATE
3. **INSTALL ENGINE TO ENGINE STAND FOR DISASSEMBLY**
4. **REMOVE TIMING CHAIN AND SPROCKETS (See page EM–18)**
5. **REMOVE ENGINE WIRE**
6. **REMOVE CYLINDER HEAD (See page EM–42)**

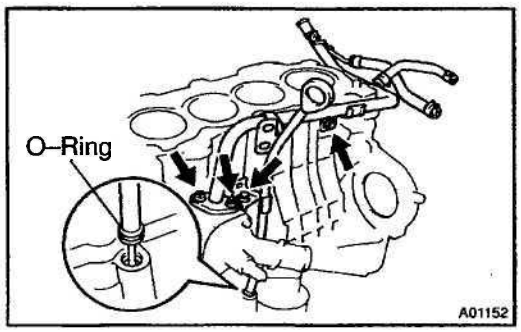

7. **1ZZ–FE:**
   REMOVE OIL DIPSTICK AND GUIDE
   (a) Remove the bolt and oil dipstick and guide.
   (b) Remove the O–ring from the dipstick.
8. **REMOVE WATER BYPASS PIPE**
   Remove the 2 nuts, bolts and water bypass pipe.
9. **REMOVE THERMOSTAT (See page CO–9)**
10. **REMOVE KNOCK SENSOR**
11. **REMOVE ENGINE COOLANT DRAIN UNION**
12. **REMOVE OIL PUMP (See page LU–9)**

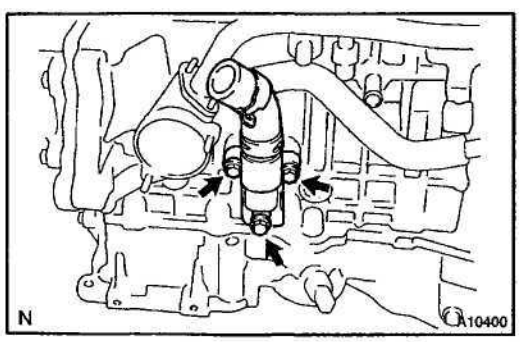

13. **2ZZ–GE:**
    REMOVE VENTILATION CASE
    (a) Remove the 3 nuts, ventilation case and gasket.
    (b) Remove the clip and No. 3 ventilation hose.

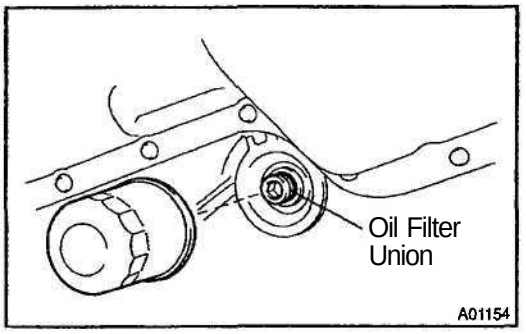

14. REMOVE OIL FILTER (See page LU–3)

15. REMOVE OIL FILTER UNION

Using a 12 mm hexagon wrench, remove the oil filter union.

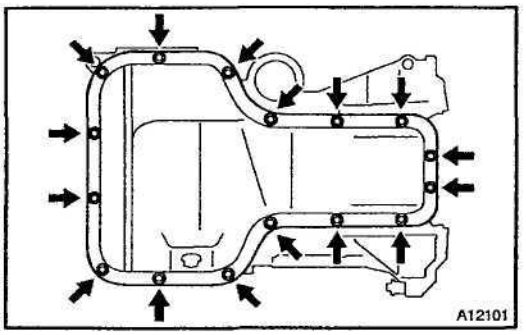

16. REMOVE OIL PAN

(a) 1ZZ-FE:
Remove the 14 bolts and 2 nuts.

(b) 2ZZ–GE:
Remove the 12 bolts and 4 nuts.

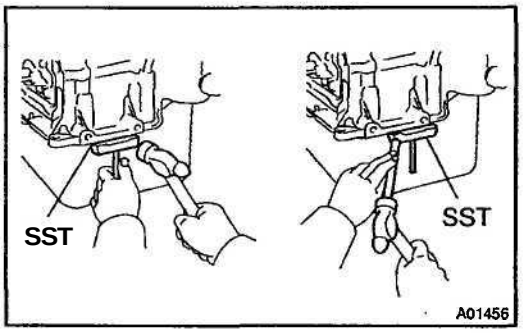

(c) Insert the blade of SST between the bearing cap sub–assembly and oil pan, and cut off applied sealer and remove the oil pan.
SST 09032–00100

NOTICE:

- **Be careful not to the damage the oil pan contact surface of the bearing cap sub–assembly.**
- **Be careful not to damage the oil pan flange.**

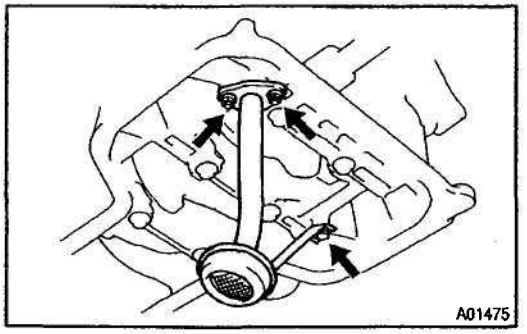

17. 1ZZ–FE:
REMOVE OIL STRAINER

Remove the 2 nuts, bolt, oil strainer and gasket.

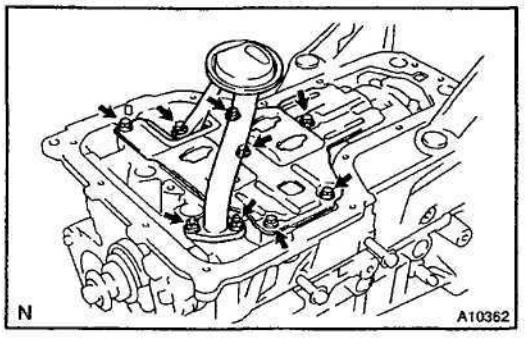

18. 2ZZ–GE:
REMOVE OIL STRAINER AND OIL PAN BAFFLE

(a) Remove the 2 nuts, bolt, oil strainer and gasket.

(b) Remove the 4 bolts, 2 nuts and oil pan baffle.

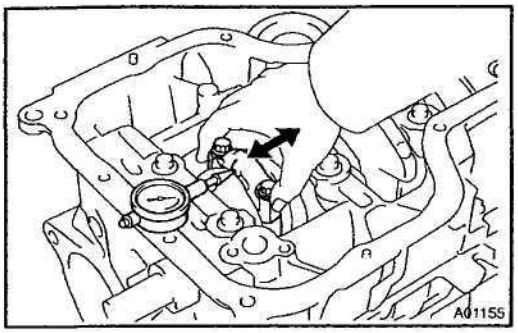

19. CHECK CONNECTING ROD THRUST CLEARANCE

Using a dial indicator, measure the thrust clearance while moving the connecting rod back and forth.

Standard thrust clearance:
0.160 - 0.342 mm (0.0063 - 0.0135 in.)
Maximum thrust clearance:
0.342 mm (0.0135 in.)

If the thrust clearance is greater than maximum, replace the connecting rod assembly(s). If necessary, replace the crankshaft.

Connecting rod thickness:
19.788 - 19.840 mm (0.7791 - 0.7811 in.)

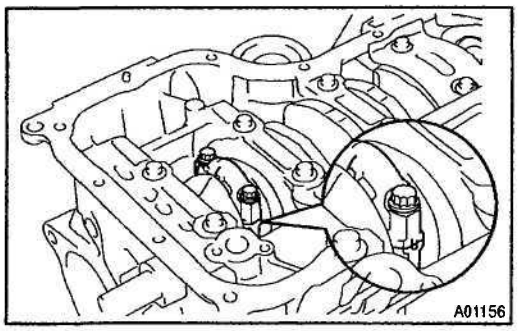

20. REMOVE CONNECTING ROD CAPS AND CHECK OIL CLEARANCE

(a) Check the matchmarks on the connecting rod and cap are aligned to ensure correct reassembly.
(b) Remove the 2 connecting rod cap bolts.

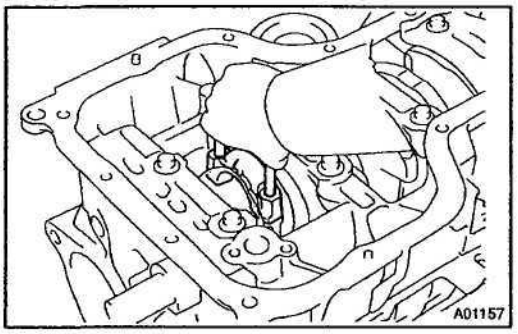

(c) Using the 2 removed connecting rod cap bolts, remove the connecting rod cap and lower bearing by wiggling the connecting rod cap right and left.

HINT:
Keep the lower bearing inserted with the connecting rod cap.

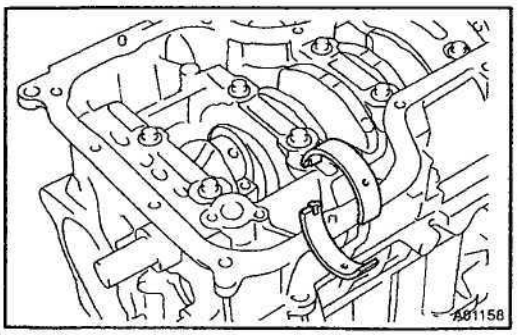

(d) Clean the crank pin and bearing.
(e) Check the crank pin and bearing for pitting and scratches.

If the crank pin or bearing is damaged, replace the bearings.
If necessary, replace the crankshaft.

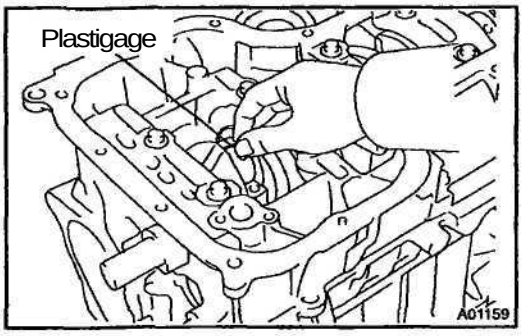

(f) Lay a strip of Plastigage the crank pin.

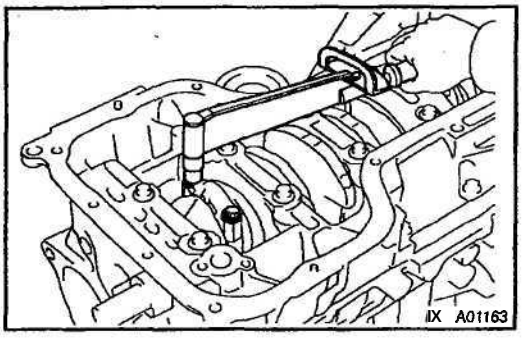

(g) Install the connecting rod cap with the 2 bolts (See page EM–106).

Torque:
1st:
1ZZ–FE: 20 N-m (204 kgf.cm, 15 ft·lbf)
2ZZ–GE: 30 N·m (306 kgf·cm, 22 ft·lbf)
2nd: Turn extra 90°

NOTICE:

Do not turn the crankshaft.

(h) Remove the 2 bolts, connecting rod cap and lower bearing. (See procedure (b) and (c) above)

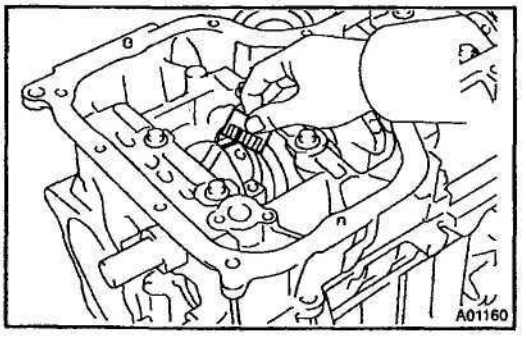

(i) Measure the Plastigage at its widest point.

Standard oil clearance:
1ZZ–FE:
0.028 - 0.060 mm (0.0011 - 0.0024 in.)
2ZZ–GE:
0.028 - 0.052 mm (0.0011 - 0.0020 in.)
Maximum oil clearance;
0.08 mm (0.0031 in.)

If the oil clearance is greater than maximum, replace the bearings. If necessary, grind or replace the crankshaft.

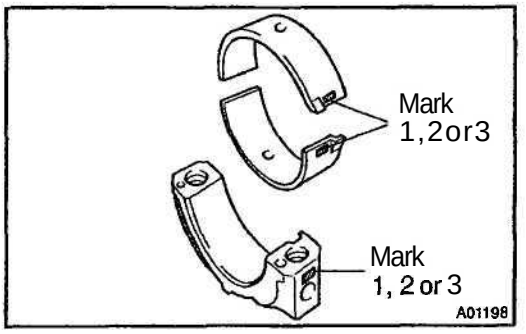

HINT:

If replacing a bearing, replace it with one having the same number as marked on the connecting rod. There are 3 sizes of standard bearings, marked "1", "2" and "3" accordingly.

Reference

Standard bearing center wall thickness

1ZZ-FE:

Mark	mm (in.)
"1"	1.486 – 1.490 (0.0585 - 0.0587)
"2"	1.490 – 1.494 (0.0587 - 0.0588)
"3"	1.494 - 1.498 (0.0588 - 0.0590)

2ZZ-GE:

Mark	mm (in.)
"1"	1.482 – 1.486 (0.0583 - 0.0585)
"2"	1.486 – 1.490 (0.0585 - 0.0587)
"3"	1.490 - 1.494 (0.0587 - 0.0588)

(j) Completely remove the Plastigage.

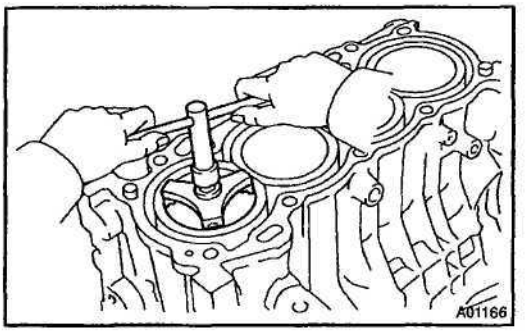

21. REMOVE PISTON AND CONNECTING ROD ASSEMBLIES

(a) Using a ridge reamer, remove all the carbon from the top of the cylinder.

(b) Push the piston, connecting rod assembly and upper bearing through the top of the cylinder block.

HINT:

- Keep the bearings, connecting rod and cap together.
- Arrange the piston and connecting rod assemblies in the correct order.

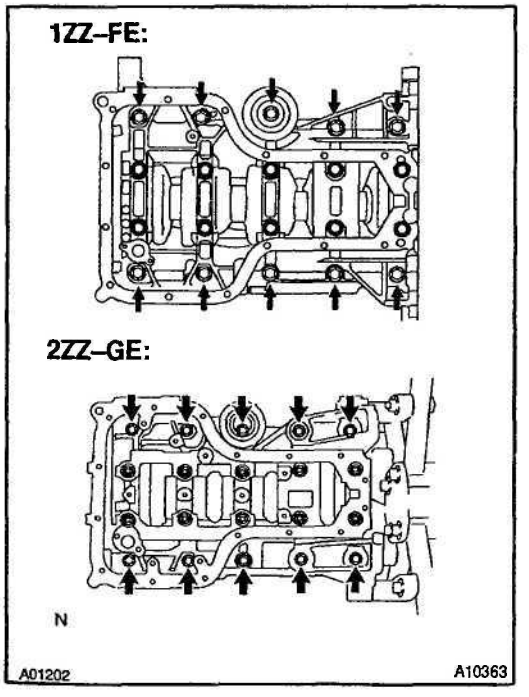

22. REMOVE BEARING CAP SUB-ASSEMBLY AND CRANKSHAFT REAR OIL SEAL, AND CHECK OIL CLEARANCE

(a) 2ZZ-GE:
Remove the 4 screw plugs from the bearing cap sub-assembly.

(b) Remove the 10 hexagon head bearing cap sub-assembly bolts.

(c) Uniformly loosen and remove the 10 bearing cap sub-assembly bolts, in several passes, in the sequence shown.

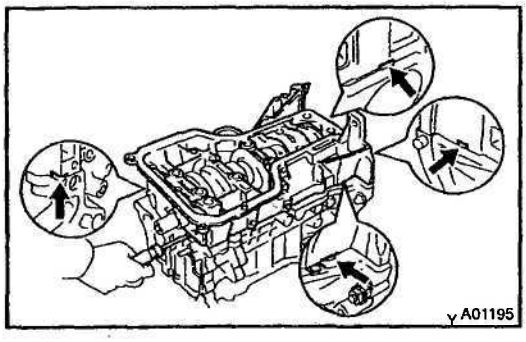

(d) Using a screwdriver, remove the bearing cap sub–assembly by prying the portions between the cylinder block and bearing cap sub—assembly. Remove the 5 lower main bearings.

NOTICE:

Be careful not to damage the contact surfaces of the cylinder block and bearing cap sub–assembly.

HINT:

Keep the lower bearing and bearing cap sub–assembly together.

(e) Remove the crankshaft rear oil seal.

(f) Lift out the crankshaft.

HINT:

Keep the upper bearings together with the cylinder block.

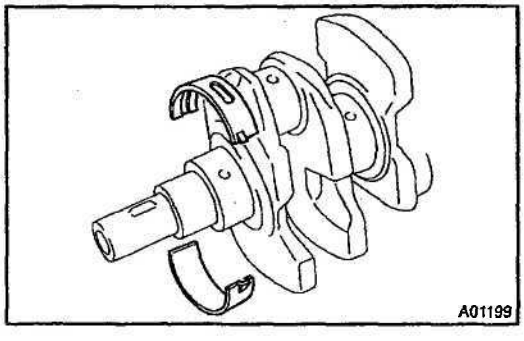

(g) Clean each main journal and bearing.

(h) Check each main journal and bearing for pitting and scratches.

If the journal or bearing is damaged, replace the bearings.

If necessary, replace the crankshaft.

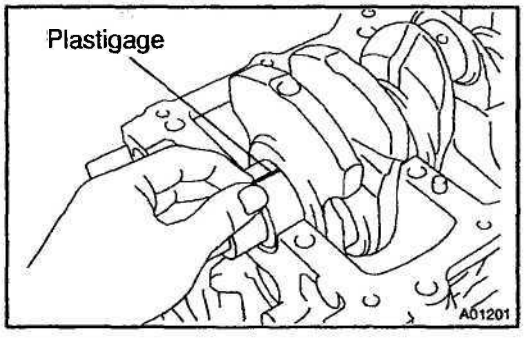

(i) Place the crankshaft on the cylinder block.

(j) Lay a strip of Plastigage across each journal.

(k) Install the bearing cap sub–assembly (See page EM–106).

NOTICE:

Do not turn the crankshaft.

(l) Remove the bearing cap sub–assembly (See procedures (a) to (e) above).

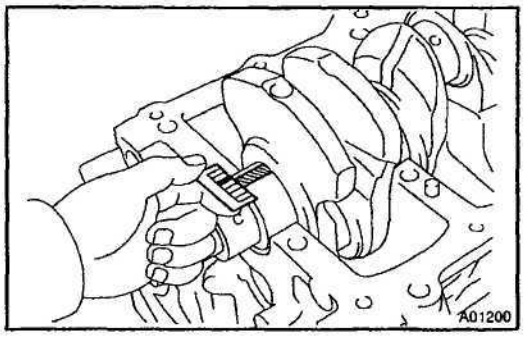

(m) Measure the Plastigage at its widest point.

Standard oil clearance:

1ZZ–FE:

0.015 - 0.032 mm (0.0006 - 0.0013 in.)

2ZZ–GE:

0.016 - 0.032 mm (0.0006 - 0.0013 in.)

Maximum oil clearance:

0.050 mm (0.0020 in.)

If the oil clearance is greater then maximum, replace the bearings. If necessary, replace the crankshaft.

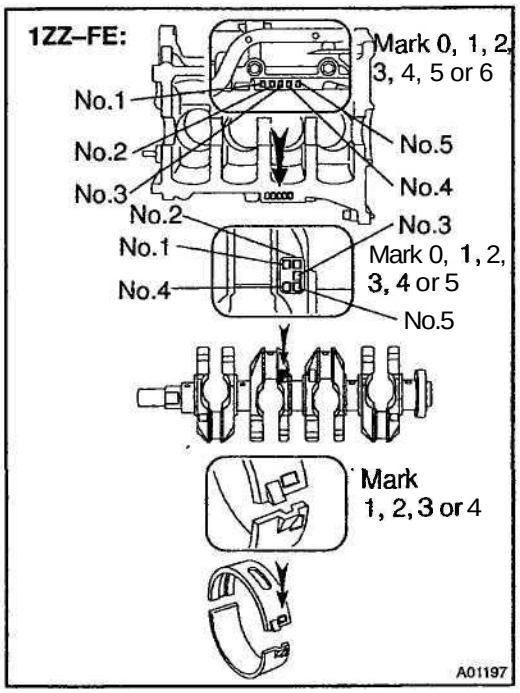

(n) 1ZZ-FE:

If using a standard bearing, replace it with one having the same number. If the number of the bearing cannot be determined, select the correct bearing by adding together the numbers imprinted on the cylinder block and crankshaft, then selecting the bearing with the same number as the total. There are 4 sizes of standard bearings, marked "1", "2", "3" and "4" accordingly.

	Total number	" ": Number mark		
Cylinder block (A) + Crankshaft (B)	0-2	3-5	6-8	9-11
Use bearing	"1"	"2"	"3"	"4"

EXAMPLE: Cylinder block "4" (A)
+ Crankshaft "3" (B)
= Total number 7 (Use bearing "3")

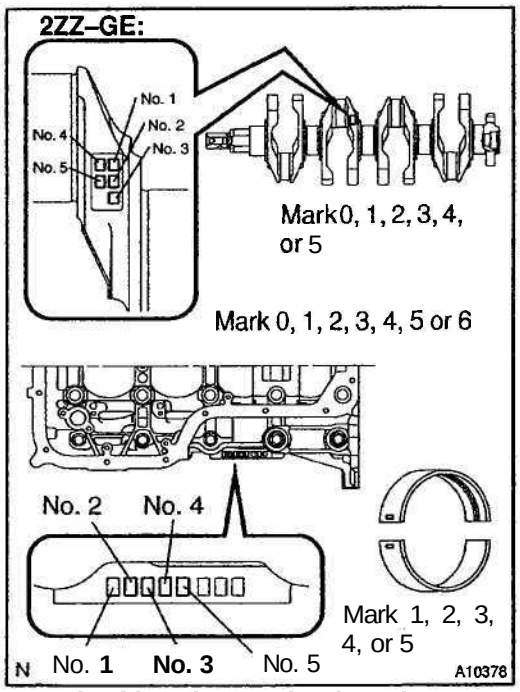

(o) 2ZZ–GE:

If using standard bearing, replace it with one having the same number. If the number of the bearing cannot be determined, refer to the following table to select bearing.

Standard bearings selection chart

Cylinder block Number mark	Crank shaft number mark					
	0	1	2	3	4	5
0	1	1	1	2	2	2
1	1	1	2	2	2	3
2	1	2	2	2	3	3
3	2	2	2	3	3	3
4	2	3	3	3	4	4
5	3	3	3	4	4	4
6	3	3	4	4	4	5

EXAMPLE: Cylinder block "4", Crank shaft "3", Use bearing "3"

Reference

Item	Mark	mm (in.)
Cylinder block main journal bore diameter (A)	"0"	52.000 - 52.003 (2.0472 - 2.0473)
	"1"	52.003 - 52.005 (2.0473 - 2.0474)
	"2"	52.005 - 52.007 (2.0474 - 2.0475)
	"3"	52.007 - 52.010 (2.0475 - 2.0476)
	"4"	52.010 - 52.012 (2.0476 - 2.0477)
	"5"	52.012 - 52.014 (2.0477 - 2.0478)
	"6"	52.014 - 52.016 (2.0478 - 2.0479)
Crankshaft main journal diameter (B)	"0"	47.998 - 48.000 (1.8897 - 1.8898)
	"1"	47.996 - 47.998 (1.8896 – 1.8897)
	"2"	47.994 - 47.996 (1.8895 – 1.8896)
	"3"	47.992 - 47.994 (1.8894 - 1.8895)
	"4"	47.990 - 47.992 (1.8893 - 1.8894)
	"5"	47.988 - 47.990 (1.8892 - 1.8893)
1ZZ–FE: Standard bearing center wall thickness	"1"	1.993 – 1.996 (0.0785 - 0.0786)
	"2"	1.996 – 1.999 (0.0786 - 0.0787)
	"3"	1.999 - 2.002 (0.0787 - 0.0788)
	"4"	2.002 - 2.005 (0.0788 - 0.0789)
2ZZ–GE Standard bearing center wall thickness	"1"	1.989 - 1.992 (0.0783 - 0.0784)
	"2"	1.992 - 1.995 (0.0784 - 0.0785)
	"3"	1.995 - 1.998 (0.0785 - 0.0787)
	"4"	1.998 – 2.001 (0.0787 – 0.0788)
	"5"	2.001 - 2.004 (0.0788 - 0.0789)

(p) Completely remove the Plastigage.

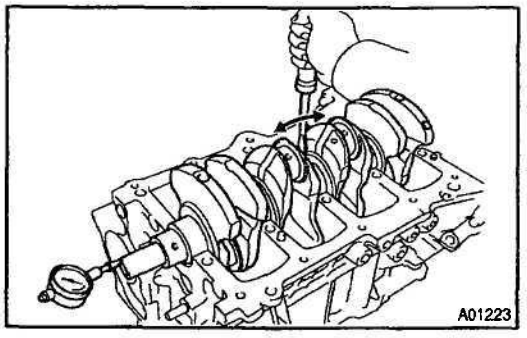

23. CHECK CRANKSHAFT THRUST CLEARANCE

Using a dial indicator, measure the thrust clearance while prying the crankshaft back and forth with a screwdriver.

Standard thrust clearance:
0.04 - 0.24 mm (0.0016 - 0.0094 in.)
Maximum thrust clearance:
0.30 mm (0.0118 in.)

If the thrust clearance is greater than maximum, replace the thrust washers as a set.

Thrust washer thickness:
2.430 - 2.480 mm (0.0957 - 0.0976 in.)

24. REMOVE CRANKSHAFT

(a) Lift out the crankshaft.

(b) Remove the 5 upper main bearings and 2 thrust washers from the cylinder block.

HINT:

Arrange the main bearings and thrust washers in the correct order.

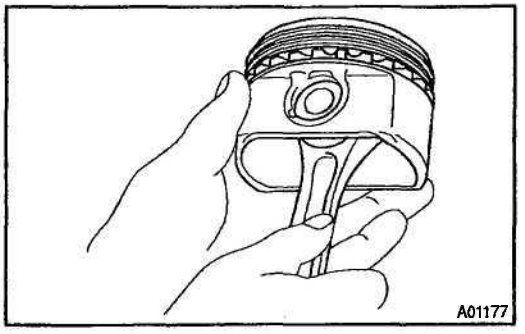

25. CHECK FIT BETWEEN PISTON AND PISTON PIN

Try to move the piston back and forth on the piston pin.

If any movement is felt, replace the piston and pin as a set.

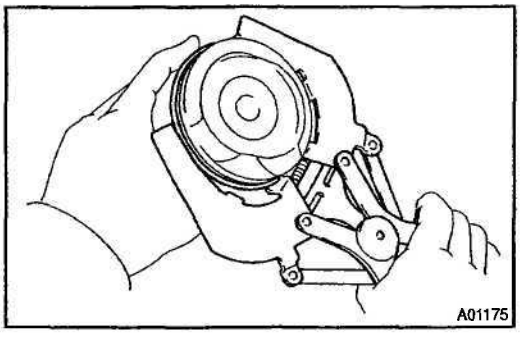

26. REMOVE PISTON RINGS

(a) Using a piston ring expander, remove the 2 compression rings.

(b) Remove the 2 side rails and oil ring by hand.

HINT:

Arrange the piston rings in the correct order only.

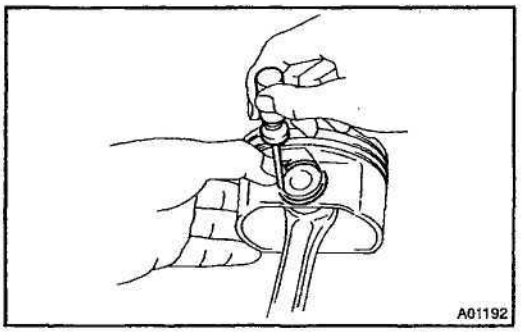

27. DISCONNECT CONNECTING ROD FROM PISTON

(a) Using a small screwdriver, pry out the 2 snap rings.

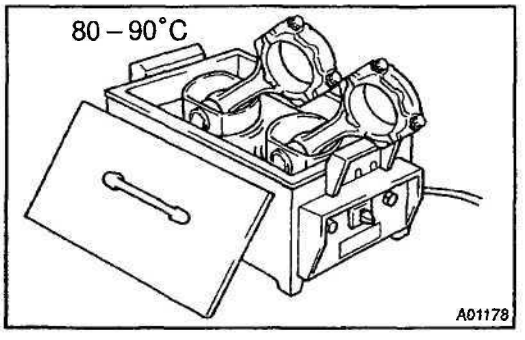

(b) 1ZZ-FE:

Gradually heat the piston to 80 - 90°C (176 - 194°F).

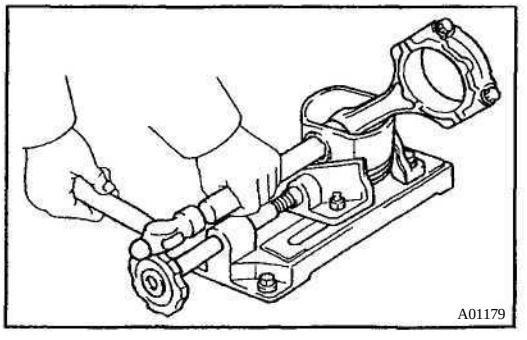

(c) 1ZZ-FE:

Using a plastic-faced hammer and brass bar, lightly tap out the piston pin and remove the connecting rod.

HINT:

- The piston and pin are a matched set.
- Arrange the pistons, pins, rings, connecting rods and bearings in the correct order.

(d) 2ZZ–GE:

Remove the pin and connecting rod from the piston.

EM164-01

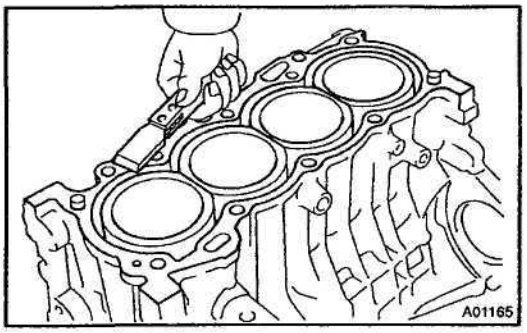

INSPECTION

1. REMOVE GASKET MATERIAL

Using a gasket scraper, remove all the gasket material from the top surface of the cylinder block.

2. CLEAN CYLINDER BLOCK

Using a soft brush and solvent, thoroughly clean the cylinder block.

NOTICE:

If the cylinder is washed at high temperatures, the cylinder liner sticks out beyond the cylinder block, so always wash the cylinder block at a temperature of 45°C (133°F) or less.

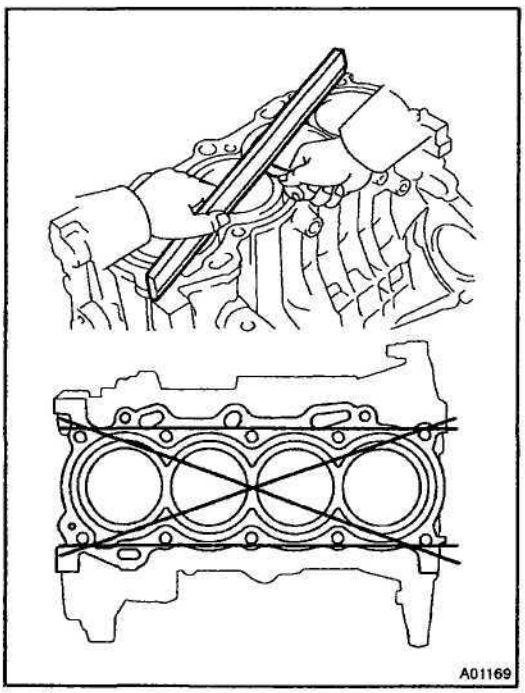

3. INSPECT TOP SURFACE OF CYLINDER BLOCK FOR FLATNESS

Using a precision straight edge and feeler gauge, measure the surface contacting the cylinder head gasket for warpage.

Maximum warpage: 0.05 mm (0.0020 in.)

If warpage is greater than maximum, replace the cylinder block.

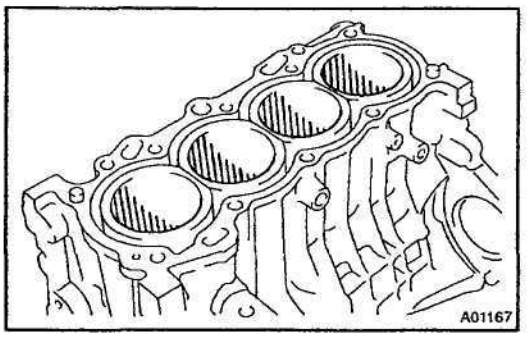

4. INSPECT CYLINDER BORE DIAMETER

Visually check the cylinder for vertical scratches.

If deep scratches are present, replace the cylinder block.

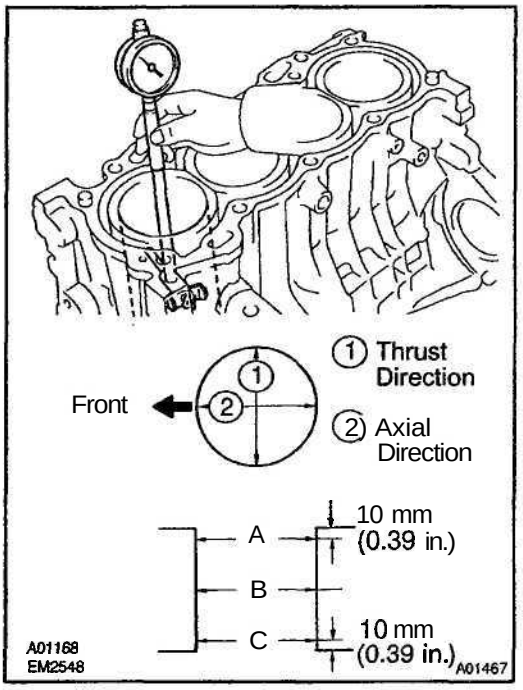

5. INSPECT CYLINDER BORE DIAMETER

Using a cylinder gauge, measure the cylinder bore diameter at positions A, B and C in the thrust and axial directions.

Standard diameter:
1ZZ-FE 79.000 - 79.013 mm (3.1102 - 3.1107 in.)
2ZZ–GE 82.000 - 82.013 mm (3.2283 - 3.2289 in.)
Maximum diameter:
1ZZ-FE 79.013 mm (3.1107 in.)
2ZZ–GE 82.013 mm (3.2289 in.)

If the diameter is greater than maximum, replace the cylinder block.

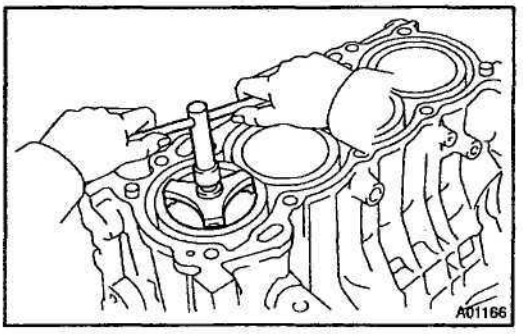

6. REMOVE CYLINDER RIDGE

If the wear is less than 0.2 mm (0.008 in.), using a ridge reamer, grind the top of the cylinder.

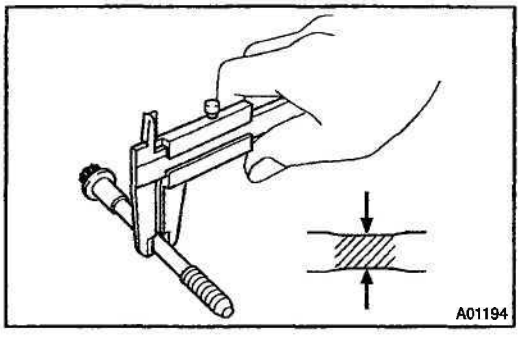

7. INSPECT 12 POINTED HEAD BEARING CAP SUB–ASSEMBLY BOLTS

Using vernier calipers, measure the tension portion diameter of the bolt.

Standard diameter: 7.3 - 7.5 mm (0.287 - 0.295 in.)
Minimum diameter: 7.3 mm (0.287 in.)

If the diameter is less than minimum, replace the bolt.

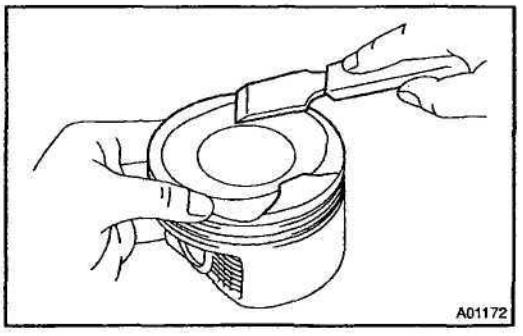

8. CLEAN PISTON

(a) Using a gasket scraper, remove the carbon from the piston top.

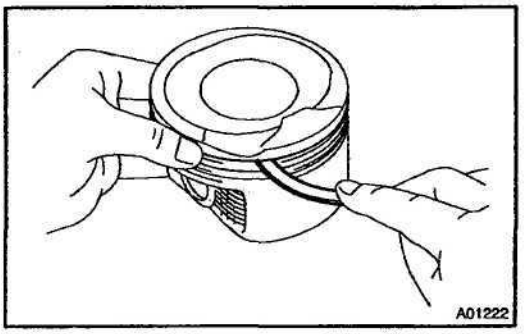

(b) Using a groove cleaning tool or broken ring, clean the piston ring grooves.

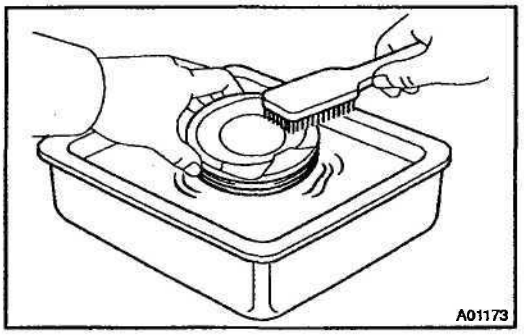

(c) Using solvent and a brush, thoroughly clean the piston.

NOTICE:

Do not use a wire brush.

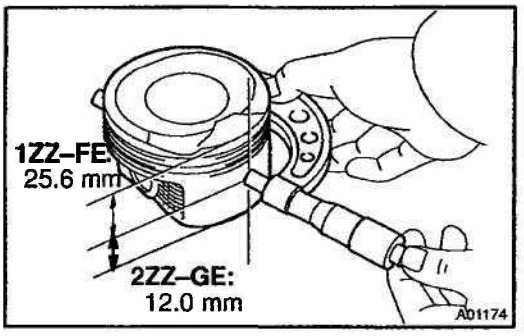

9. INSPECT PISTON OIL CLEARANCE

(a) 1ZZ-FE:

Using a micrometer, measure the piston diameter at right angles to the piston pin center line, 25.6 mm (1.008 in.) from the piston head.

(b) 2ZZ–GE:

Using a micrometer, measure the piston diameter at right angles to the piston pin center line, 12.0 mm (0.048 in.) from the piston bottom.

Piston diameter:

1ZZ–FE:

78.925 - 78.935 mm (3.1073 - 3.1077 in.)

2ZZ–GE:

81.975 - 81.993 mm (3.2274 - 3.2281 in.)

(c) Measure the cylinder bore diameter in the thrust directions (See procedure in step 5).

(d) Subtract the piston diameter measurement from the cylinder bore diameter measurement.

Standard oil clearance:

1ZZ–FE:

0.065 - 0.088 mm (0.0026 - 0.0035 in.)

2ZZ–GE:

0.007 - 0.038 mm (0.0003 - 0.0015 in.)

Maximum oil clearance:

0.10 mm (0.0039 in.)

If the oil clearance is greater than maximum, replace all the 4 pistons. If necessary, replace the cylinder block.

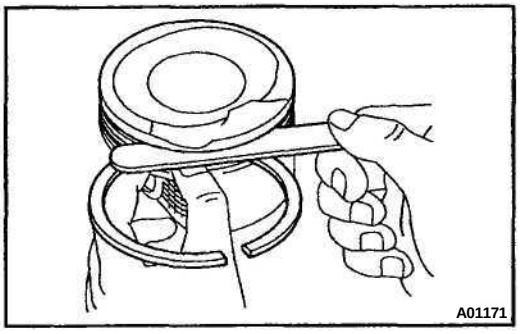

10. INSPECT PISTON RING END GAP

Using a feeler gauge, measure the clearance between new piston ring and the wall of the ring groove.

Ring groove clearance:
0.030 - 0.070 mm (0.0012 - 0.0028 in.)

If the clearance is not as specified, replace the piston.

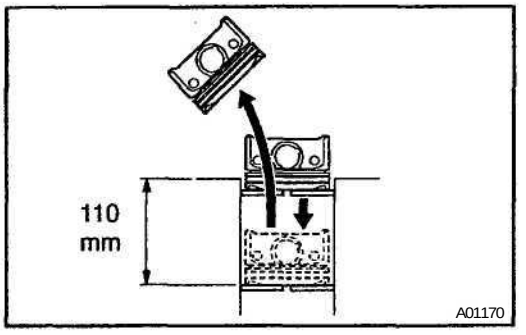

11. INSPECT PISTON RING END GAP

(a) Insert the piston ring into the cylinder bore.
(b) Using a piston, push the piston ring a little beyond the bottom of the ring travel, 110 mm (4.33 in.) from the top of the cylinder block.
(c) Using a feeler gauge, measure the end gap.

Standard end gap:
No.1 0.25 - 0.35 mm (0.0098 - 0.0138 in.)
No.2 0.35 - 0.50 mm (0.0138 - 0.0197 in.)
Oil (Side rail) 0.15 - 0.40 mm (0.0059 - 0.0157 in.)
Maximum end gap:
No.1 1.05 mm (0.0413 in.)
No.2 1.20 mm (0.0472 in.)
Oil (Side rail) 1.05 mm (0.0413 in.)

If the end gap is greater than maximum, replace the piston ring.
If the end gap is greater than maximum, even with a new piston ring, replace the cylinder block.

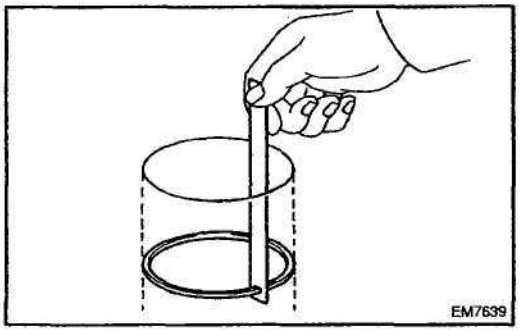

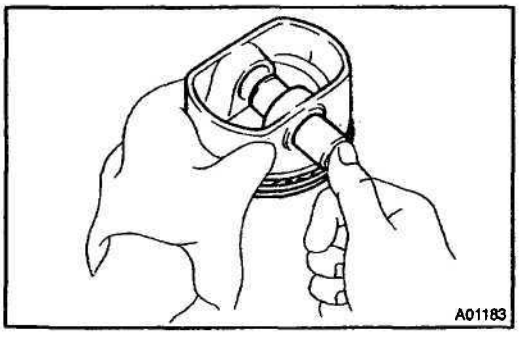

12. INSPECT PISTON PIN FIT

At 80 – 90°C (176 – 194°F), you should be able to push the piston pin into the piston pin hole with your thumb.

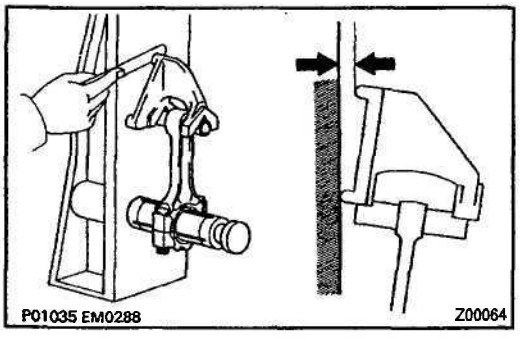

13. INSPECT CONNECTING ROD ALIGNMENT

Using a rod aligner and feeler gauge, check the connecting rod alignment.

- Check for out–of–alignment

Maximum out–of alignment:
0.05 mm (0.0020 in.) per 100 mm (3.94 in.)

If out–of alignment is greater than maximum, replace the connecting rod assembly.

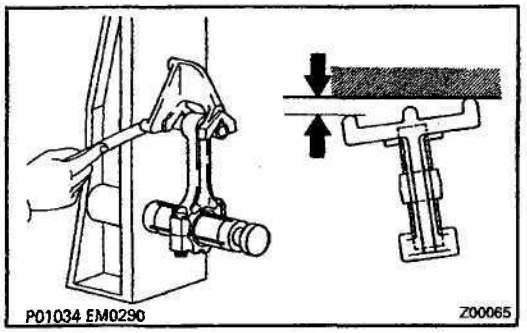

- Check for twist

Maximum twist:
0.05 mm (0.0020 in.) per 100 mm (3.94 in.)

If twist is greater than maximum, replace the connecting rod assembly.

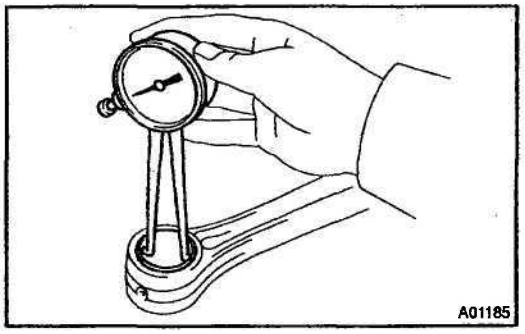

14. INSPECT PISTON PIN OIL CLEARANCE

(a) Using a caliper gauge, measure the inside diameter of the connecting rod bushing.

Bushing inside diameter:
1ZZ–FE 20.012 - 20.021 mm (0.7879 - 0.7882 in.)
2ZZ–GE 20.011 - 20.023 mm (0.7878 - 0.7883 in.)

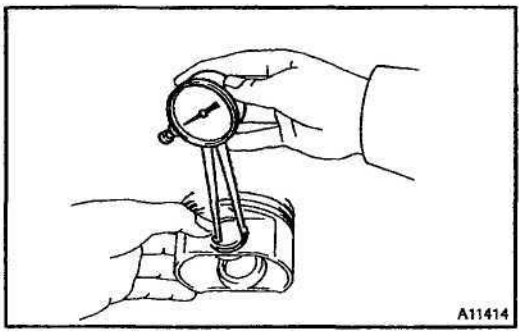

(b) 2ZZ–GE:

Using caliper gauge, measure the inside diameter of the piston bushing.

Bushing inside diameter:
20.013 - 20.025 mm (0.7879 - 0.7884 in.)

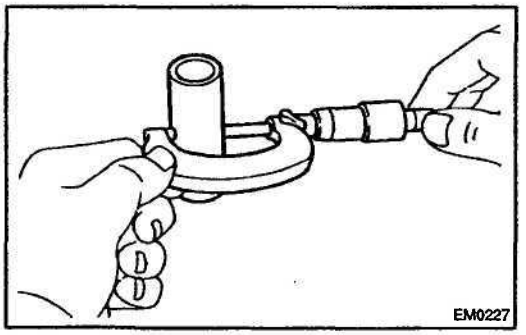

(c) Using a micrometer, measure the piston pin diameter.

Piston pin diameter:
1ZZ–FE 20.004 - 20.013 mm (0.7876 - 0.7879 in.)
2ZZ–GE 20.004 - 20.016 mm (0.7876 - 0.7880 in.)

(d) Subtract the piston pin diameter measurement from the bushing inside diameter measurement.

Standard oil clearance:
1ZZ–FE 0.005 - 0.011 mm (0.0002 - 0.0004 in.)
2ZZ–GE
Piston x Piston pin
0.005 - 0.013 mm (0.0002 - 0.0005 in.)
Piston pin x Connecting rod
0.005 - 0.009 mm (0.0002 - 0.0004 in.)
Maximum oil clearance:
0.05 mm (0.0020 in.)

If the oil clearance is greater than maximum, replace the bushing. If necessary, replace the piston and piston pin as a set.

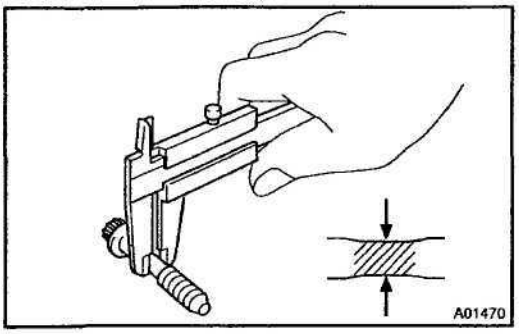

15. INSPECT CONNECTING ROD BOLTS

Using a vernier calipers, measure the tension portion diameter of the bolt.

Standard diameter: 6.6 - 6.7 mm (0.260 - 0.264 in.)
Minimum diameter: 6.4 mm (0.252 in.)

If the diameter is less than minimum, replace the bolt.

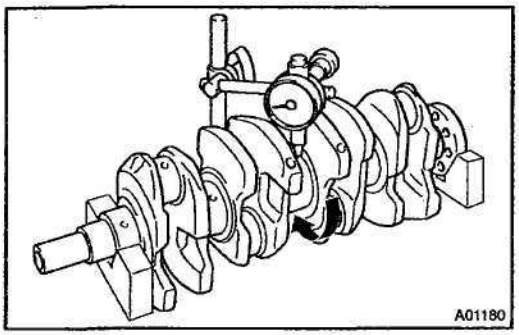

16. INSPECT CRANKSHAFT FOR CIRCLE RUNOUT

(a) Place the crankshaft on V–blocks.
(b) Using a dial indicator, measure the circle runout, as shown in the illustration.

Maximum circle runout: 0.03 mm (0.0012 in.)

If the circle runout is greater than maximum, replace the crankshaft.

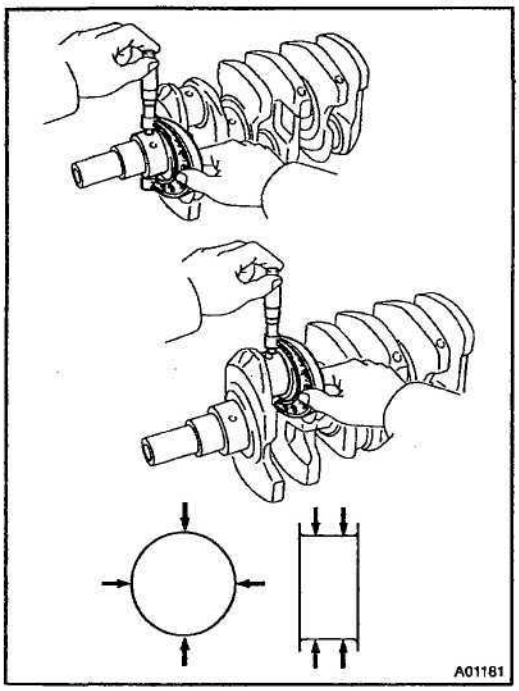

17. INSPECT MAIN JOURNALS AND CRANK PINS

(a) Using a micrometer, measure the diameter of each main journal and crank pin.

Main journal diameter:
47.988 - 48.000 mm (1.8893 – 1.8898 in.)
Crank pin diameter:
1ZZ–FE:
43.992 - 44.000 mm (1.7320 – 1.7323 In.)
2ZZ–GE:
44.992 - 45.000 mm (1.7713 – 1.7717 in.)

If the diameter is not as specified, check the oil clearance (See page EM–89).

If necessary, replace the crankshaft.

(b) Check each main journal and crank pin for taper and out–of-round as shown.

Maximum taper and out–of–round:
0.02 mm (0.0008 in.)

If the taper and out–of round is greater than maximum, replace the crankshaft.

EM065-03

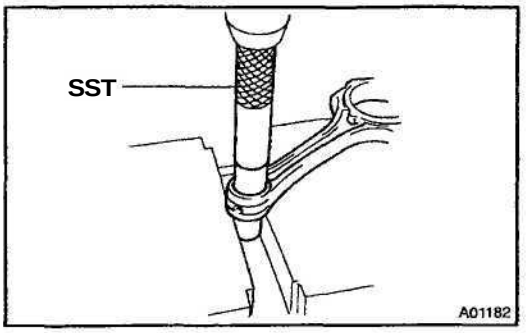

REPLACEMENT

1. REPLACE CONNECTING ROD BUSHINGS

(a) Using SST and a press, press out the bushing.
SST 09222-30010

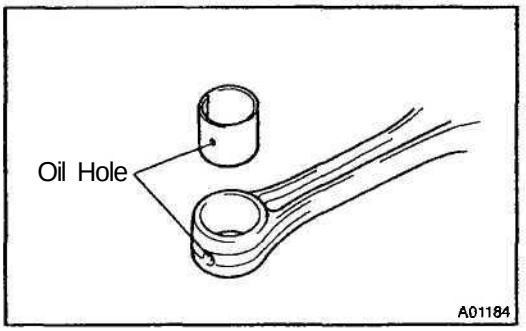

(b) Align the oil hoses of a new bushing and the connecting rod.

(c) Using SST and a press, press in the bushing.
SST 09222-30010

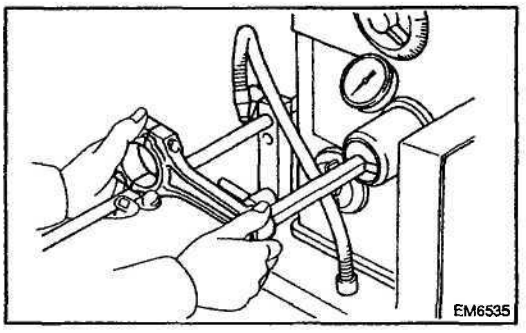

(d) Using a pin hole grinder, hone the bushing to obtain the standard specified clearance (See page EM-98) between the bushing and piston pin.

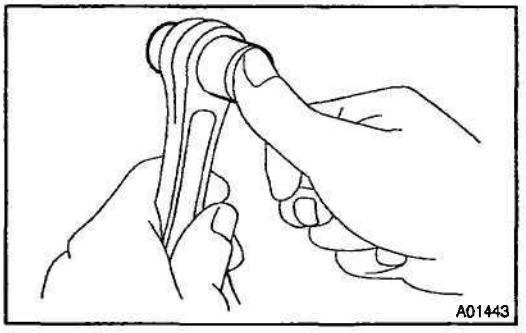

(e) Check the piston pin fit at normal room temperature. Coat the piston pin with engine oil, and push it into the connecting rod with your thumb.

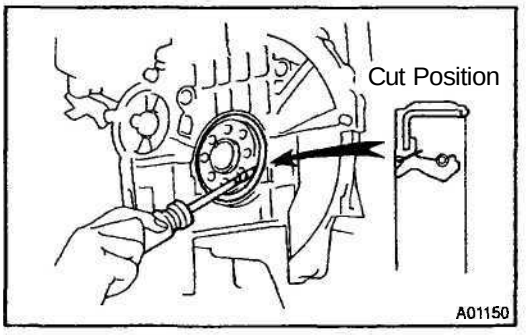

2. REPLACE CRANKSHAFT REAR OIL SEAL

If rear oil seal is installed to cylinder block.

(a) Using a knife cut off the oil seal lip.

(b) Using a screwdriver, pry out the oil seal.

NOTICE:

Be careful not to damage the crankshaft. Tape the screwdriver tip.

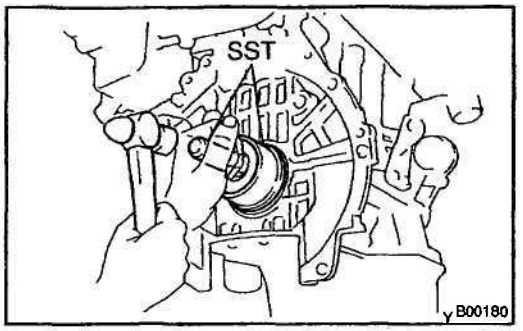

(c) Apply MP grease to a new oil seal lip.
(d) Using SST and a hammer, tap in the oil seal until its surface is flush with the rear oil seal retainer edge.
SST 09223–15030, 09950–70010 (09951–07100)

EM165-01

REASSEMBLY

HINT:

- Thoroughly clean all parts to be assembled.
- Before installing the parts, apply fresh engine oil to all sliding and rotating surfaces.
- Replace all gaskets, O–rings and oil seals with new parts.

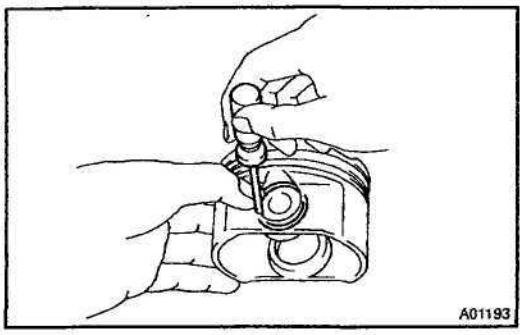

1. ASSEMBLE PISTON AND CONNECTING ROD

(a) Using a small screwdriver, install a new snap ring at one end of the piston pin hole.

HINT:

Be sure that end gap of the snap ring is not aligned with the pin hole cutout portion of the piston.

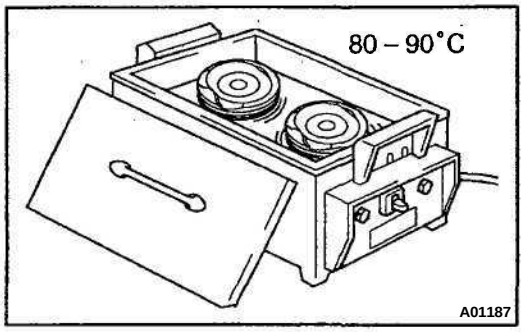

(b) 1ZZ-FE:
Gradually heat the piston to 80 - 90°C (176 – 194°F).

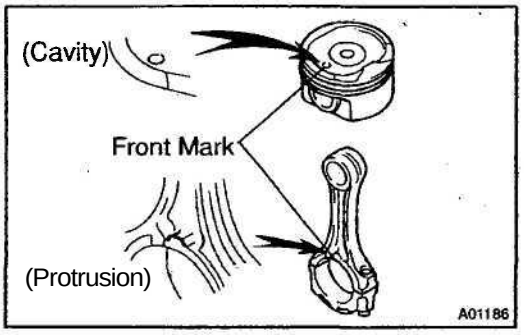

(c) Coat the piston pin with engine oil.

(d) Align the front marks on the piston and connecting rod, and push in the piston with your thumb.

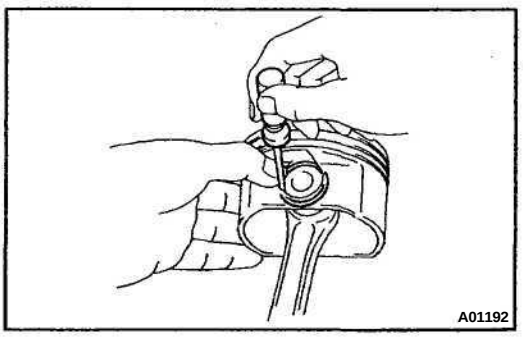

(e) Using a small screwdriver, install a new snap ring on the other end of the piston pin hole.

HINT:

Be sure that end gap of the snap ring is not as aligned with the pin hole cutout portion of the piston.

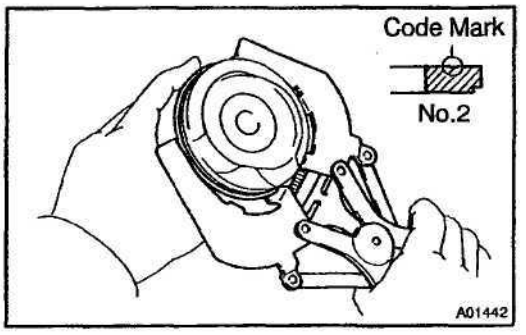

2. INSTALL PISTON RINGS

(a) Install the oil ring expander and 2 side rails by hand.

(b) Using a piston ring expander, install the 2 compression rings with the code mark facing upward.

Code mark :
1ZZ–FE: T or 2R
2ZZ–GE: T

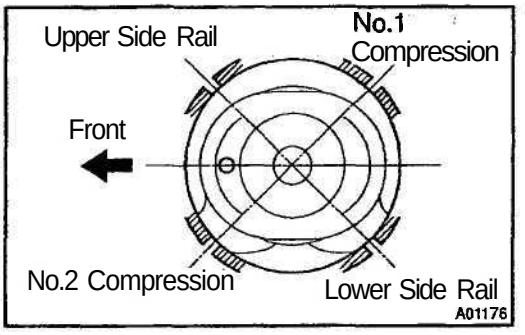

(c) Position the piston rings so that the ring ends are as shown.

NOTICE:
Do not align the ring ends.

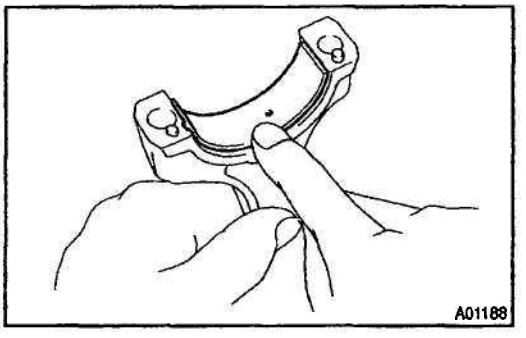

3. INSTALL CONNECTING ROD BEARINGS

(a) Align the bearing claw with the groove of the connecting rod or connecting cap.

(b) Install the bearings in the connecting rod and connecting rod cap.

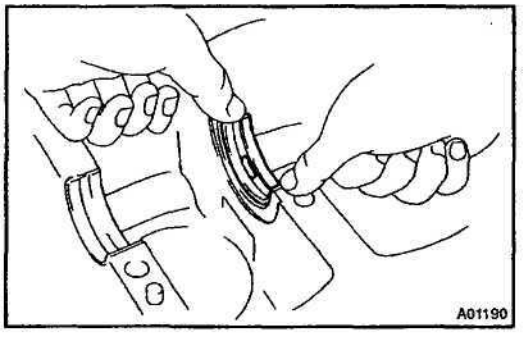

4. INSTALL MAIN BEARINGS

HINT:

Upper bearings have an oil groove and oil holes; Lower bearings do not.

(a) Align the bearing claw with the claw groove of the cylinder block, and push in the 5 upper bearings.

NOTICE:
Install the bearing with the oil hole in the cylinder block.

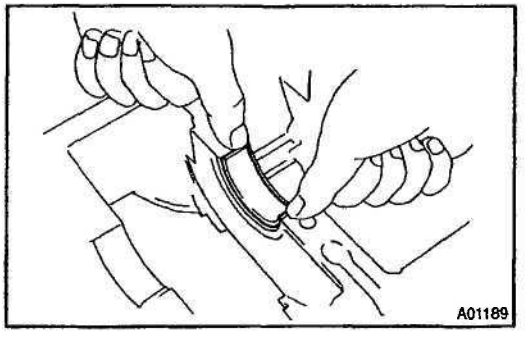

(b) Align the bearing claw with the claw grove of the main bearing cap, and push in the 5 lower bearings.

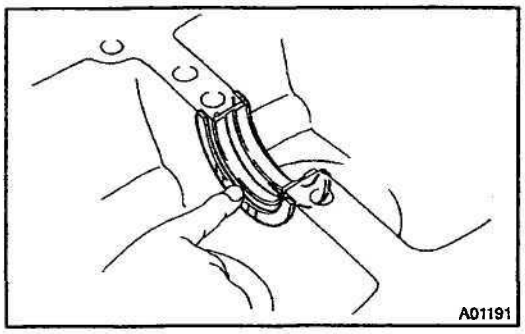

5. INSTALL THRUST WASHERS

Install the 2 thrust washers under the No.3 journal position of the cylinder block with the oil grooves facing outward.

6. PLACE CRANKSHAFT ON CYLINDER BLOCK

7. PLACE BEARING CAP SUB–ASSEMBLY ON CYLINDER BLOCK

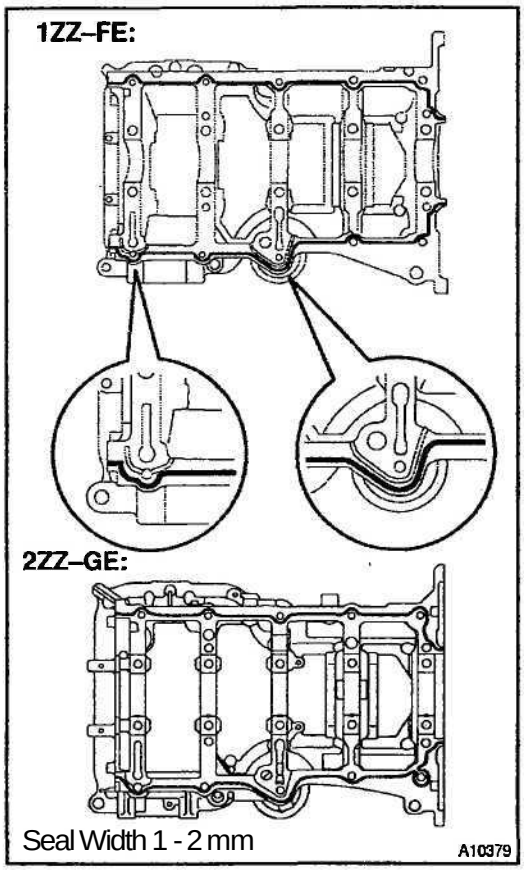

(a) Remove any old packing (FIPG) material and be careful not to drop any oil on the contact surfaces of the bearing cap sub–assembly and cylinder block.

- Using a razor blade and gasket scraper, remove all the old packing (FIPG) material from the gasket surfaces and sealing grooves.
- thoroughly clean all components to remove all the loose material.
- Using a non–reusable solvent, clean both sealing surfaces.

(b) Apply seal packing to the bearing cap sub–assembly as shown in the illustration.

Seal packing:
Part No. 08826–00080 or equivalent

- Install a nozzle that has been cut to a 1 - 2 mm (0.004 - 0.08 in.) opening.

HINT:
Avoid applying an excessive amount to the surface.

- Parts must be assembled within 3 minutes of application. Otherwise the material must be removed and reapplied.
- Immediately remove nozzle from the tube and reinstall cap.

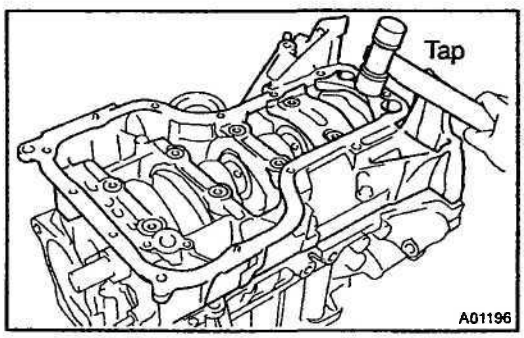

(c) Using a plastic-faced hammer, lightly tap the bearing cap sub–assembly to ensure a proper fit.

8. INSTALL 12 POINTED HEAD BEARING CAP SUB–ASSEMBLY BOLTS

HINT:

- The bearing cap sub–assembly bolts are tightened in 3 progressive steps (steps (b), (c) and (e)).
- If any of the bearing cap sub–assembly bolts in broken or deformed, replace it.

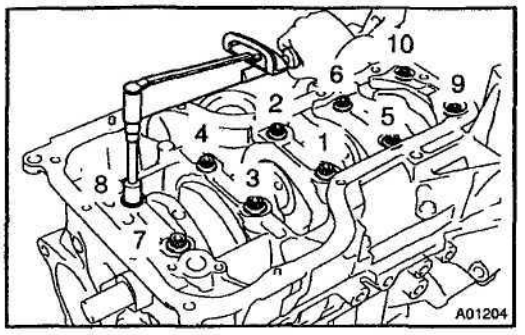

(a) Apply a light coat of engine oil on the threads and under the bearing cap sub–assembly bolts.

(b) Install and uniformly tighten the 10 bearing cap sub–assembly bolts, in several passes, in the sequence shown.
Torque: 22 N·m (225 kgf·cm, 16 ft·lbf)

(c) Retighten the bearing cap sub–assembly bolts, in several passes, in the sequence shown.
Torque: 44 N·m (449 kgf·cm, 32 ft·lbf)

If any of the bearing cap sub–assembly bolts does not meet the torque specification, replace the bearing cap sub–assembly bolt.

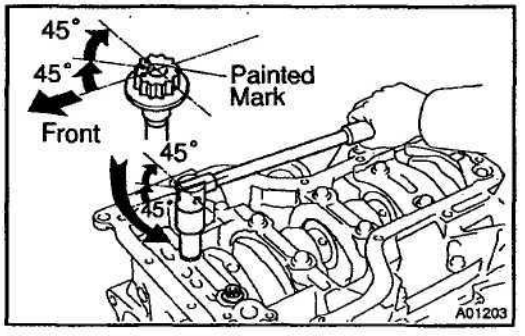

(d) Mark the front of the bearing cap sub–assembly bolts with paint.

(e) Retighten the bearing cap sub–assembly bolts by 45° and 45° in the numerical order shown.

(f) Check that the painted mark is now at a 90° angle to the front.

9. INSTALL HEXAGON HEAD BEARING CAP SUB–ASSEMBLY BOLTS

(a) Install and uniformly tighten the 10 bearing cap sub–assembly bolts in several passes.
Torque:
1ZZ–FE: 18.5 N·m (189 kgf·cm, 14 ft·lbf)
2ZZ–GE: 18 N·m (185 kgf·cm, 13 ft·lbf)

(b) Check that the crankshaft turns smoothly.

(c) 2ZZ–GE:
Apply adhesive to 2 or 3 threads, and install the 4 screw plugs.
Adhesive:
Part No. 08833 – 00070, THREE BOND 1324, or equivalent
Torque: 43 N·m (438 kgf·cm, 32 ft·lbf)

10. CHECK CRANKSHAFT THRUST CLEARANCE (See page EM–98)

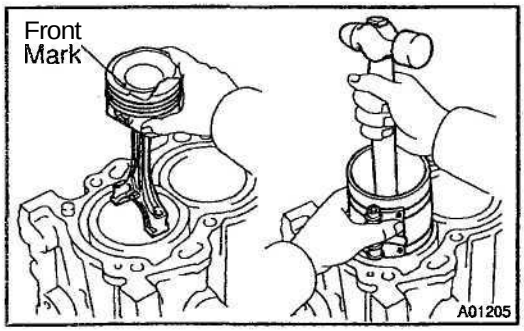

11. INSTALL PISTON AND CONNECTING ROD ASSEMBLES

Using a piston ring compressor, push the correctly numbered piston and connecting rod assemblies into each cylinder with the front mark of the piston facing forward.

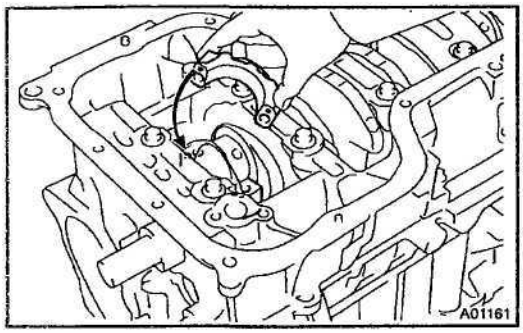

12. PLACE CONNECTING ROD CAP ON CONNECTING ROD

(a) Match the numbered connecting rod cap with the connecting rod.

(b) Align the pin dowels of the connecting rod cap with the pins of the connecting rod, and install the connecting rod.

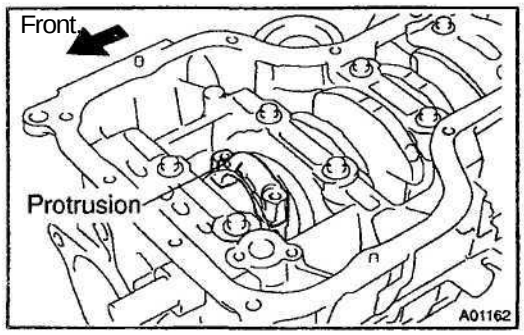

(c) Check that the protrusion of the connecting rod cap is facing in the correct direction.

13. INSTALL CONNECTING ROD CAP BOLTS

HINT:

- The connecting rod cap bolts are tightened in 2 progressive steps (steps (b) and (d)).
- If any of the connecting rod cap bolts is broken or deformed, replace it.

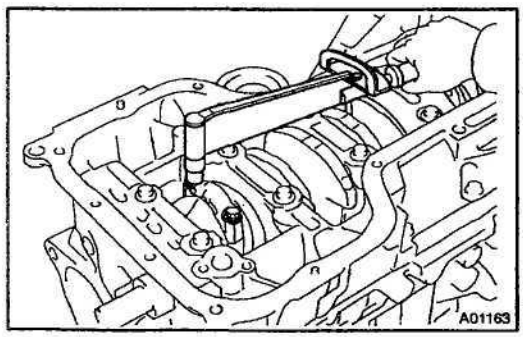

(a) Apply a light coat of engine oil on the threads and under the heads of the connecting rod cap bolts.

(b) Install and alternately tighten the 2 connecting rod cap bolts in several passes.

Torque:

1ZZ–FE: 20 N·m (204 kgf·cm, 15 ft·lbf)

2ZZ–GE: 30 N·m (306 kgf·cm, 22 ft·lbf)

If any of the connecting rod cap bolts does not meet the torque specification, replace the connecting rod cap bolts.

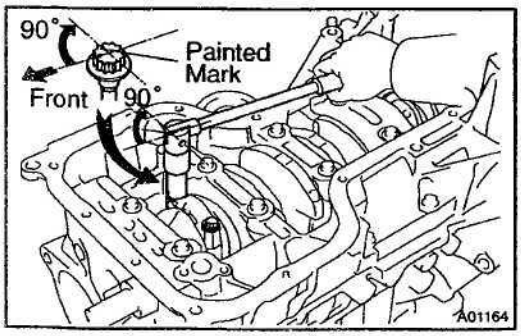

(c) Mark the front of the connecting cap bolts with paint.

(d) Retighten the cap bolts by 90° as shown.

(e) Check that the painted mark is now at a 90° angle to the front.

(f) Check that the crankshaft turns smoothly.

14. CHECK CONNECTING ROD THRUST CLEARANCE (See page EM–98)

15. INSTALL REAR CRANKSHAFT OIL SEAL (See page EM–104)

HINT:
Wipe seal packing away from the contact surface of the cylinder block assembly and oil seal.

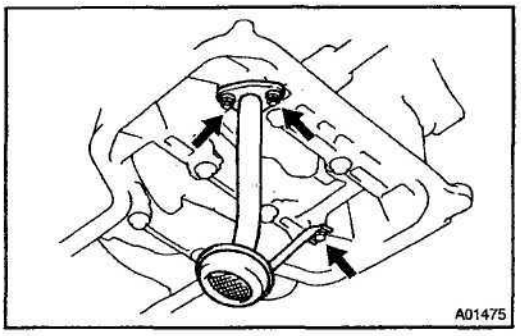

16. 1ZZ-FE:
INSTALL OIL STRAINER

Install a new gasket and the oil strainer with the 2 nuts and bolt.
Torque: 9.0 N·m (92 kgf·cm, 80 in.·lbf)

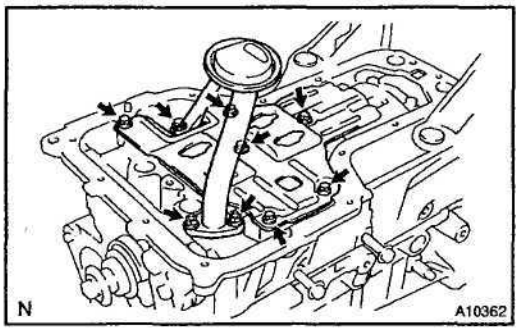

17. 2ZZ–GE:
INSTALL OIL PAN BAFFLE AND OIL STRAINER

(a) Install the oil pan baffle with the 4 bolts and 2 nuts.
Torque: 9.0 N·m (92 kgf·cm, 80 in.·lbf)

(b) Install a new gasket and oil strainer with the 2 nuts and bolt.
Torque: 9.0 N·m (92 kgf·cm, 80 in.·lbf)

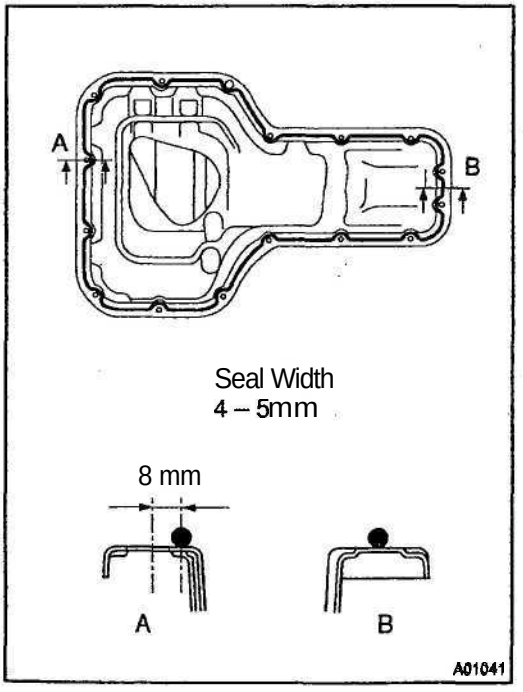

18. INSTALL OIL PAN

(a) Remove any old packing (FIPG) material and be careful not to drop any oil on the contact surface of the main bearing cap and oil pan.
- Using a razor blade and gasket scraper, remove all the old packing (FIPG) material from the gasket surfaces and sealing grooves.
- Thoroughly clean all components to remove all the loose material.
- Using a non-residue solvent, clean both sealing surfaces.

NOTICE:
Do not use a solvent which will affect the painted surfaces.

(b) Apply seal packing to the oil pan as shown in the illustration.
Seal packing:
Part No. 08826–00080 or equivalent
- Install a nozzle that has been cut to a 4- 5 mm (0.16 - 0.20 in.) opening.

HINT:
Avoid applying an excessive amount to the surface.

- Parts must be assembled within 3 minutes of application. Otherwise the material must be removed and reapplied.
- Immediately remove nozzle from the tube and reinstall cap.

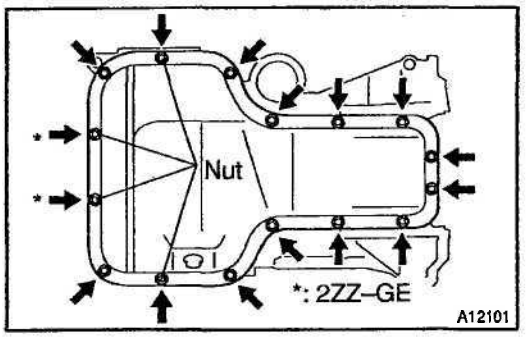

(c) 1ZZ-FE:
Install the oil pan with the 14 bolts and 2 nuts. Uniformly tighten the bolts and nuts in several passes.

(d) 2ZZ–GE:
Install the oil pan with the 12 bolts and 4 nuts. Uniformly tighten the bolts and nuts in several passes.

Torque: 9.0 N·m (92 kgf·cm, 80 in.·lbf)

19. INSTALL OIL FILTER UNION
Torque: 30 N·m (306 kgf·cm, 21 ft·lbf)

20. INSTALL OIL FILTER (See page LU–3)

21. INSTALL OIL PUMP (See page LU–13)

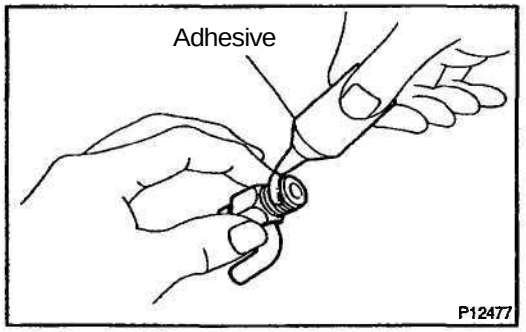

22. INSTALL ENGINE COOLANT DRAIN UNION

(a) Apply adhesive to 2 or 3 threads.
Adhesive:
Part No. 08833–00080, THREE BOND 1344, LOCTITE 242 or equivalent

(b) Install the drain union.
Torque:
1ZZ–FE 20 N·m (200 kgf·cm, 14 ft·lbf)
2ZZ–GE 25 N·m (255 kgf-cm, 18 ft·lbf)

HINT:
After applying the specified torque, rotate the drain union clockwise until its drain port is facing downward.

23. INSTALL KNOCK SENSOR
Torque: 39 N·m (400 kgf·cm, 29 ft·lbf)

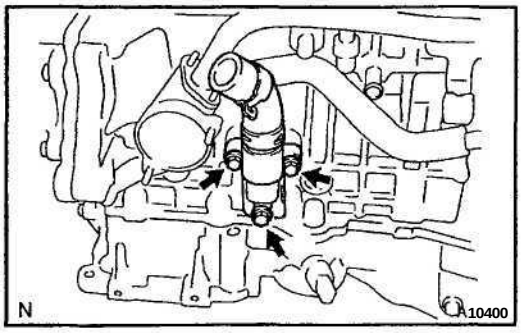

24. 2ZZ–GE:

INSTALL VENTILATION CASE

(a) Install a new gasket and ventilation case with the 3 bolts.
Torque: 8.5 N·m (87 kgf·cm, 75 in.·lbf)

(b) Install the No. 3 ventilation hose and connect the clip.

25. INSTALL THERMOSTAT (See page CO–11)

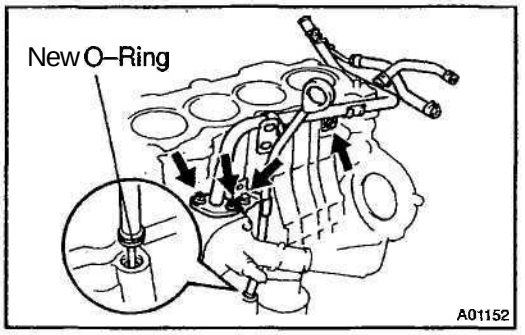

26. INSTALL WATER BYPASS PIPE

Torque:
1ZZ-FE 9.0 N·m (92 kgf·cm, 80 in.·lbf)
2ZZ–GE
Bolt 8.5 N·m (87 kgf·cm, 75 in.·lbf)
Nut 10 N·m (100 kgf·cm, 7 ft·lbf)

27. 1ZZ–FE:

INSTALL OIL DIPSTICK AND GUIDE

(a) Install a new O–ring on the dipstick guide.

(b) Apply soapy water on the O–ring.

(c) Connect the dipstick guide end to the main bearing cap.

(d) Install the dipstick guide with the bolt.
Torque: 11 N·m (113 kgf·cm, 8 ft·lbf)

28. INSTALL CYLINDER HEAD (See page EM–65)

29. INSTALL ENGINE WIRE

30. INSTALL TIMING SPROCKETS AND TIMING CHAIN (See page EM-25)

31. REMOVE ENGINE STAND

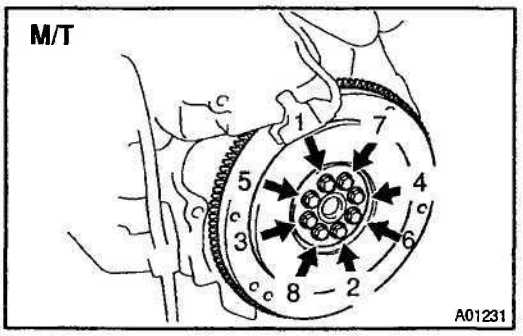

32. M/T:

INSTALL FLYWHEEL

HINT:

The flywheel bolts are tightened in 2 progressive steps, (a) and (c).

(a) Install and uniformly tighten the 8 mounting bolts, in several passes, in the sequence shown.
Torque: 49 N·m (500 kgf·cm, 36 ft·lbf)

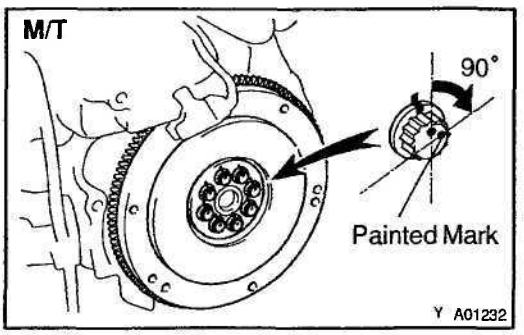

(b) Mark the flywheel bolt with paint.

(c) Retighten the flywheel bolts by an additional 90°.

(d) Check that the painted mark in now at a 90° angle to (b).

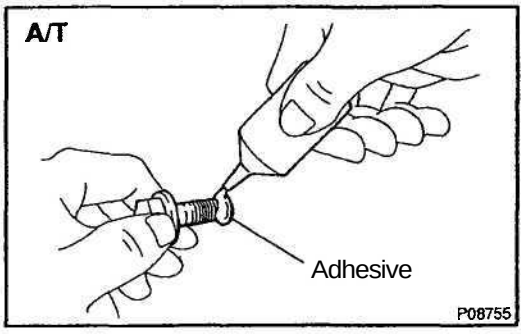

33. A/T:
INSTALL DRIVE PLATE

(a) Install the front spacer, drive plate and rear plate on the crankshaft.

(b) Apply adhesive to 2 or 3 threads of the mounting bolt end.
Adhesive:
Part No. 08833–00070, THREE BOND or equivalent

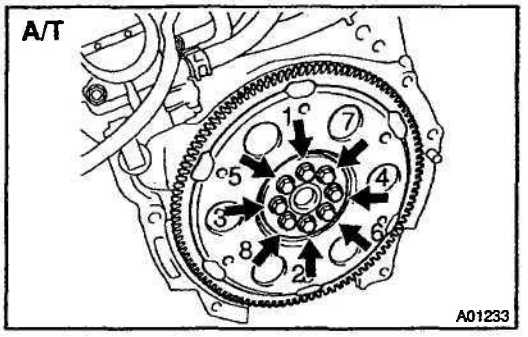

(c) Install and uniformly tighten the 8 mounting bolts, in several passes, in the sequence shown.
Torque: 88 N·m (897 kgf·cm, 65 ft·lbf)

EXHAUST SYSTEM

COMPONENTS

EM166-01

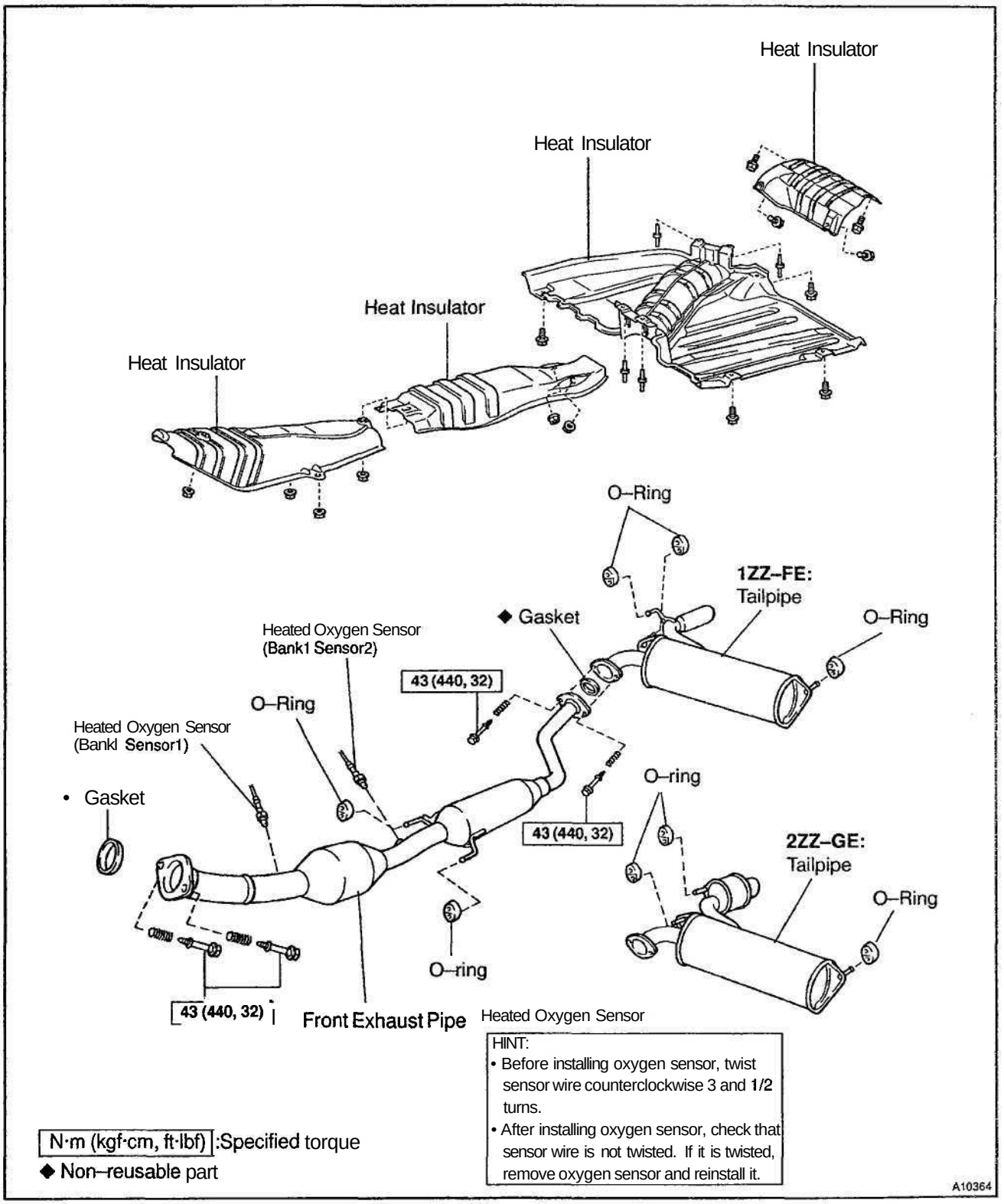

– MEMO –

EMISSION CONTROL

EMISSION CONTROL SYSTEM. EC–1
PARTS LAYOUT AND SCHEMATIC DRAWING. EC–2
POSITIVE CRANKCASE VENTILATION (PCV) SYSTEM. EC–4
EVAPORATIVE EMISSION (EVAP) CONTROL SYSTEM. EC–5
THREE-WAY CATALYTIC CONVERTER (TWC) SYSTEM. EC–11

EC

EMISSION CONTROL SYSTEM

PURPOSE

EC02E-01

The emission control systems are installed to reduce the amount of CO, HC and NOx exhausted from the engine ((3) and (4)), to prevent the atmospheric release of blow–by gas–containing HC (1) and evaporated fuel containing HC being released from the fuel tank (2).
The function of each system is shown in these table.

System	Abbreviation	Function
(1) Positive Crankcase Ventilation	PCV	Reduces HC
(2) Evaporative Emission Control	EVAP	Reduces evaporated HC
(3) Three–way Catalytic Converter	TWC	Reduces HC, CO and NOx
(4) Sequential Multiport Fuel injection*	SFI	Injects a precisely timed, optimum amount of fuel for reduced exhaust emissions

Remark: *For inspection and repair of the SFI system, refer to the SF section of this manual.

EC

PARTS LAYOUT AND SCHEMATIC DRAWING

LOCATION

EC02F-07

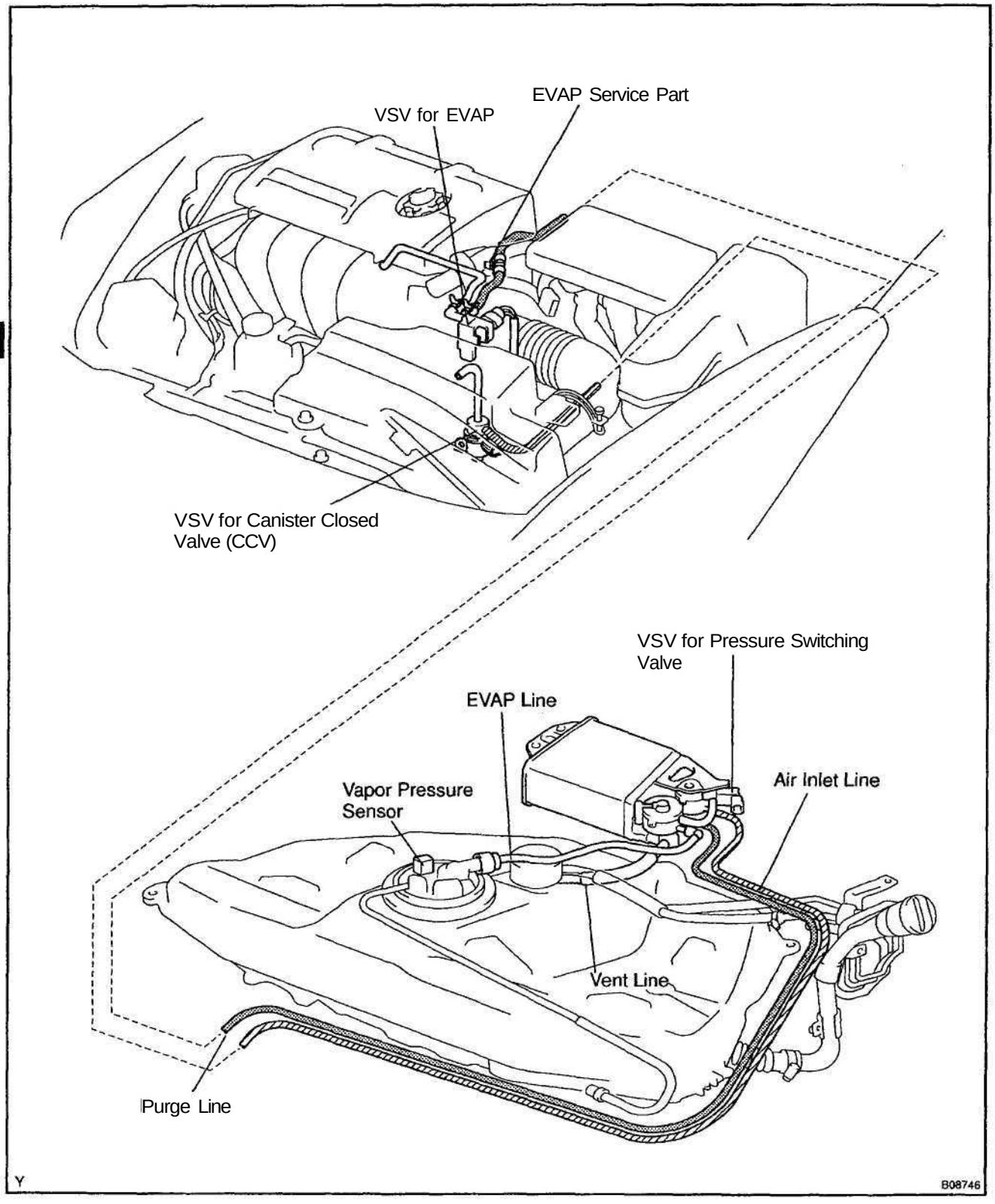

EC

DRAWING

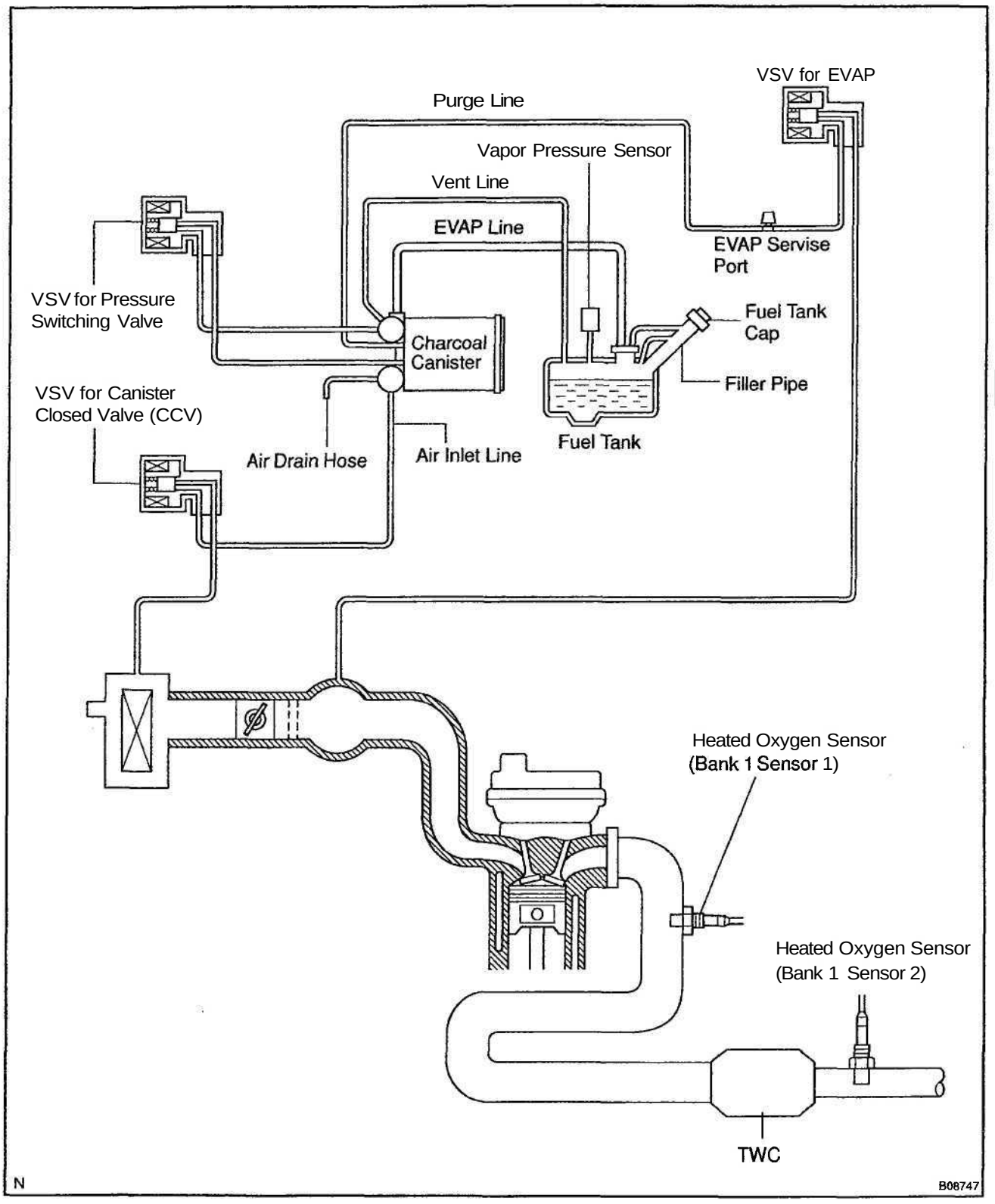
VSV for EVAP
Purge Line
Vapor Pressure Sensor
Vent Line
EVAP Line
EVAP Servise Port
VSV for Pressure Switching Valve
Charcoal Canister
Fuel Tank Cap
Filler Pipe
VSV for Canister Closed Valve (CCV)
Air Drain Hose
Air Inlet Line
Fuel Tank
Heated Oxygen Sensor (Bank 1 Sensor 1)
Heated Oxygen Sensor (Bank 1 Sensor 2)
TWC
N
B08747

EC

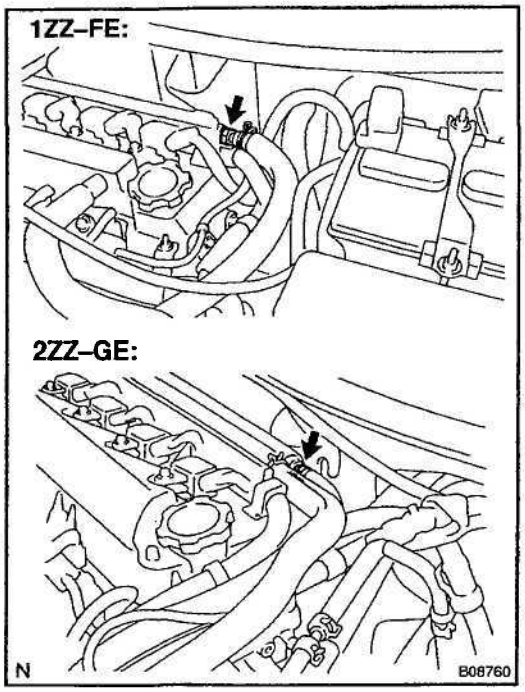

POSITIVE CRANKCASE VENTILATION (PCV) SYSTEM INSPECTION

EC02H-04

1. REMOVE PCV VALVE

(a) Disconnect the PCV hose from the PCV valve.

(b) Remove the PCV valve.

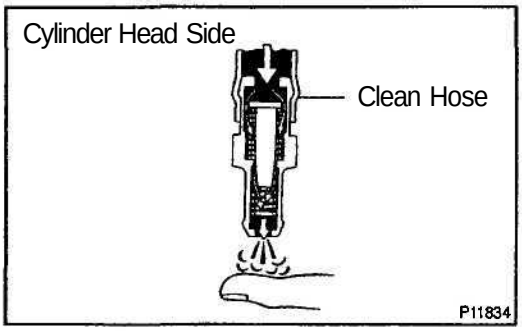

2. INSTALL CLEAN HOSE TO PCV VALVE

3. INSPECT PCV VALVE OPERATION

(a) Blow air into the cylinder head side, and check that air passes through easily.

CAUTION:

Do not suck air through the valve. Petroleum substances inside the valve are harmful.

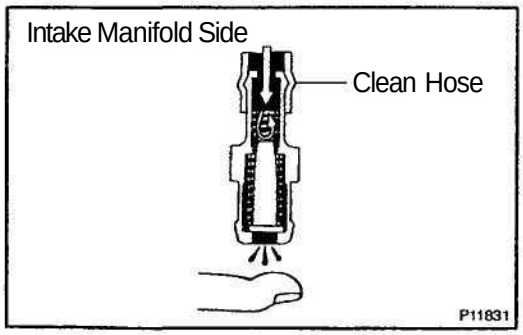

(b) Blow air into the intake manifold side, and check that air passes through with difficulty.

If operation is not as specified, replace the PCV valve.

4. REMOVE CLEAN HOSE FROM PCV VALVE

5. REINSTALL PCV VALVE

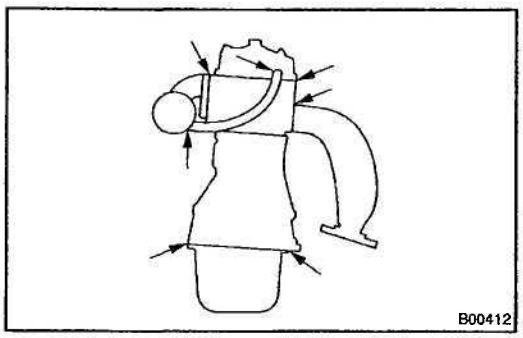

6. VISUALLY INSPECT HOSES, CONNECTIONS AND GASKETS

Check for cracks, leaks or damage.

EVAPORATIVE EMISSION (EVAP) CONTROL SYSTEM

COMPONENTS

EC021-05

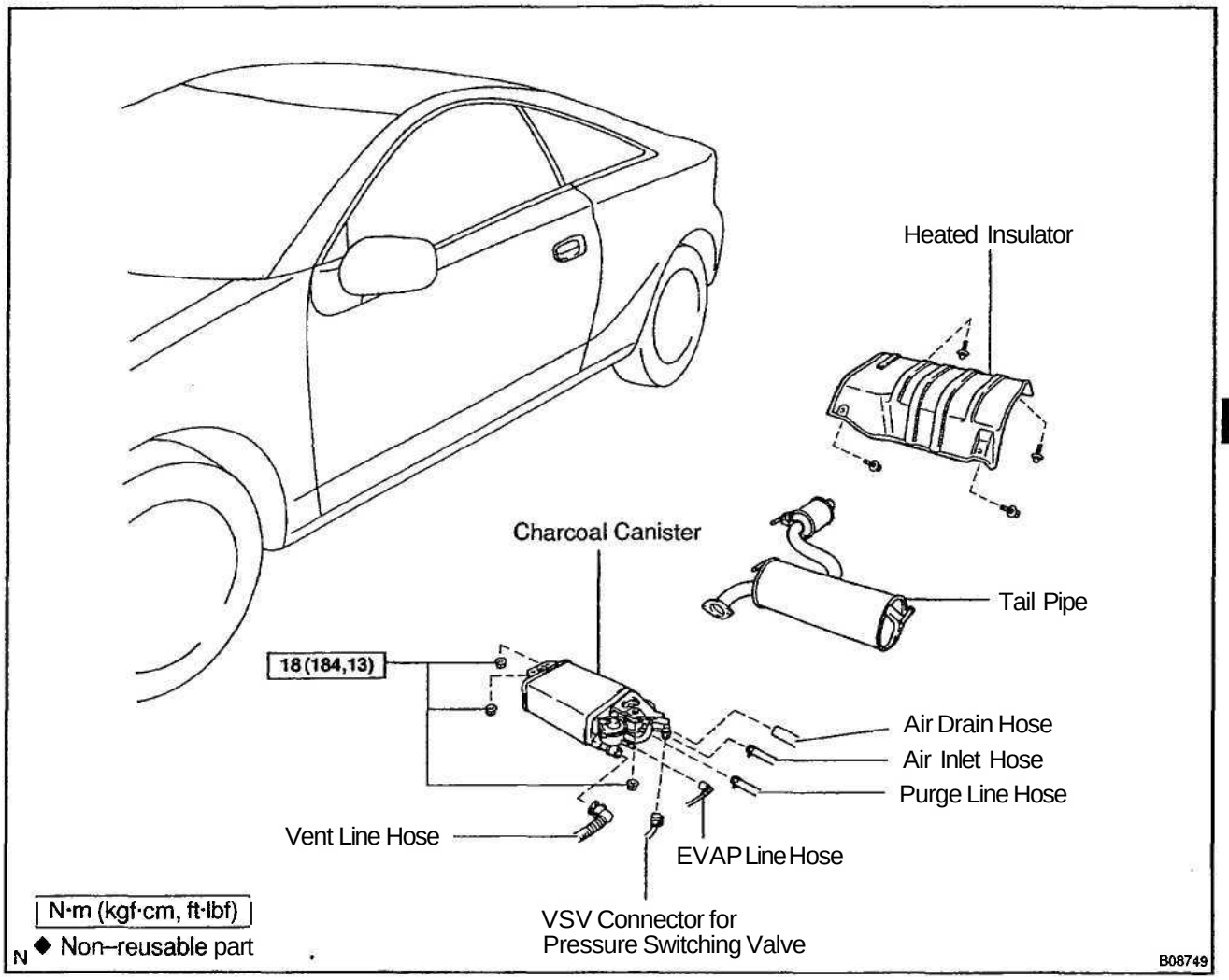

EC

EC0DR-01

INSPECTION

1. REMOVE EXHAUST TAIL PIPE AND HEATED INSULATOR (See page EM–115)

2. INSPECT LINES AND CONNECTORS

Visually check for loose connections, sharp bends or damage.

3. INSPECT FUEL TANK FILLER PIPE

Visually check for deformation, cracks or fuel leakage.

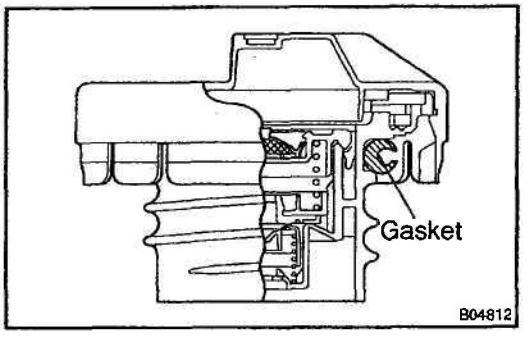

4. INSPECT FUEL TANK CAP

Visually check if the cap and/or gasket are deformed or damaged.

If necessary, repair or replace the cap.

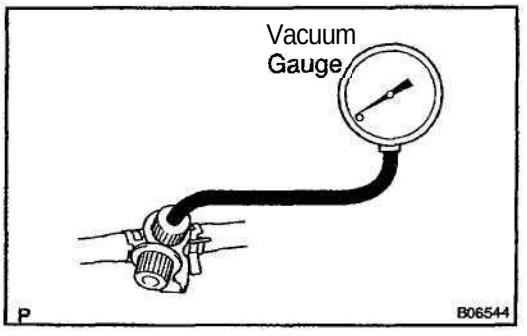

5. INSPECT EVAP SYSTEM LINE

(a) Warm up the engine and stop the engine.
Allow the engine to warm up to normal operating temperature.

(b) Install a vacuum gauge (EVAP control system test equipment vacuum gauge) to the EVAP service port on the purge line.

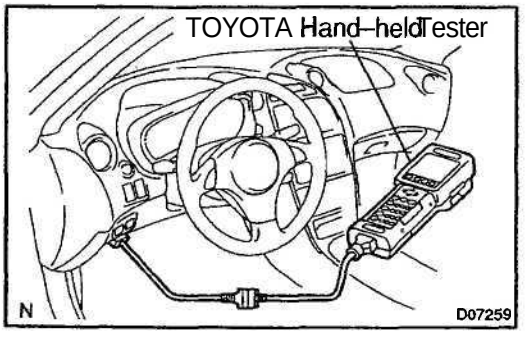

(c) TOYOTA hand–held tester:
Forced driving of the VSV for the EVAP.
(1) Connect a TOYOTA hand–held tester to the DLC3.
(2) Start the engine.
(3) Push the TOYOTA hand–held tester main switch ON.
(4) Use the ACTIVE TEST mode on the TOYOTA hand–held tester to operate the VSV for the EVAP.

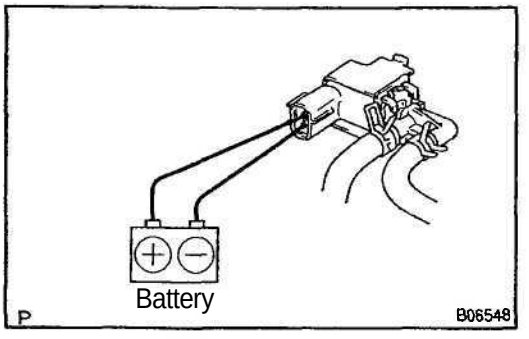

(d) If you have no TOYOTA hand–held tester:
Forced driving of the VSV for the EVAP.
(1) Disconnect the VSV connector for the EVAP.
(2) Connect the positive (+) and negative (-) leads from the battery to the VSV terminals for the EVAP.
(3) Start the engine.

EC

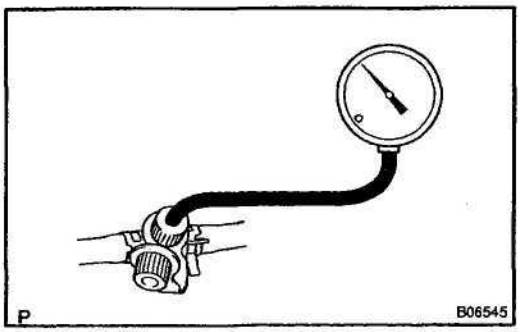

(e) Check the vacuum at idle.

Vacuum:

Maintain at 0.368 – 19.713 in.Hg (5 – 268 in.Aq) for over 5 seconds

HINT:

If the vacuum does not change, you can conclude that the hose connecting the VSV to the service port has come loose or is blocked, or the VSV is malfunctioning.

(f) If you have TOYOTA hand–held tester:

Conclude forced driving of the VSV for the EVAP.

(1) Stop the engine.

(2) Disconnect the TOYOTA hand–held tester from the DLC3.

(g) If you have no TOYOTA hand–held tester:

Conclude forced driving of the VSV for the EVAP.

(1) Stop the engine.

(2) Disconnect the positive (+) and negative (-) leads from the battery, and from the VSV terminals for the EVAP.

(3) Connect the VSV connector for the EVAP.

(h) Disconnect the vacuum gauge from the EVAP service port on the purge line.

(i) Connect a pressure gauge to the EVAP service port on the purge line.

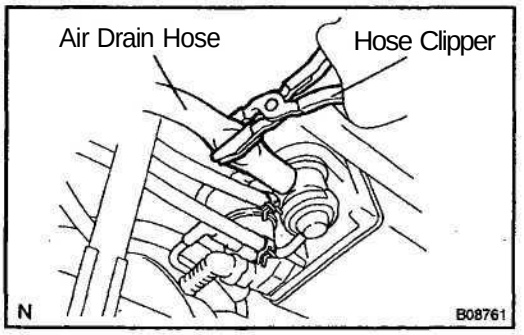

(j) Check the pressure.

(1) Close off the air drain hose at the marked position of the canister with a hose clipper or similar instrument.

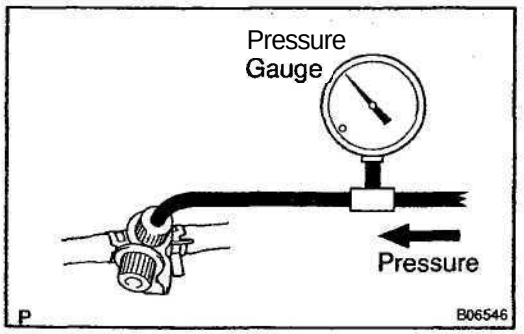

(2) Add the pressure (13.5 – 15.5 in.Aq) from the EVAP service port.

Pressure:

2 minutes after the pressure is added, the gauge should be over 7.7 - 8.8 in.Aq.

HINT:

If you can't add pressure, you can conclude that the hose connecting the VSV–canister–fuel tank has slipped off or the VSV is open.

EC

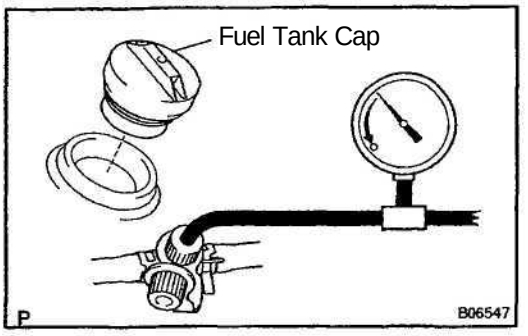

(3) Check if the pressure decreases when the fuel tank cap is removed while adding pressure.

HINT:
If the pressure does not decrease when the filler cap is removed, then you can conclude that the hose connecting the service port to the fuel tank is blocked, etc.

(k) Disconnect the pressure gauge from the EVAP service port on the purge line.

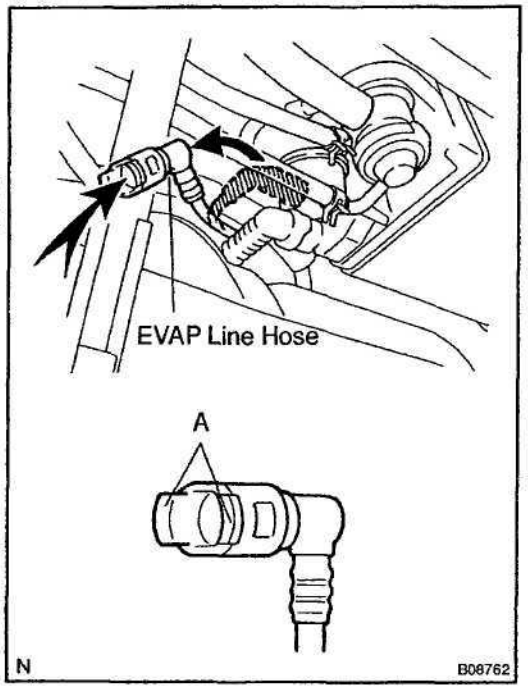

6. CHECK AIRTIGHTNESS IN FUEL TANK AND FILLER PIPE

(a) Disconnect the EVAP line hose from the charcoal canister.
  (1) Pinch portion A.
  (2) Pull out the connector.
(b) Pressurize and make the internal pressure in the fuel tank 4 kPa (41 gf/cm^2, 0.58 psi).
(c) Check that the internal pressure of the fuel tank can be held for 1 minute.
(d) Check the connected portions of each hose and pipe.
(e) Check the installed parts on the fuel tank.

If there is no abnormality, replace the fuel tank and filler pipe.

(f) Reconnect the EVAP line hose to the charcoal canister.

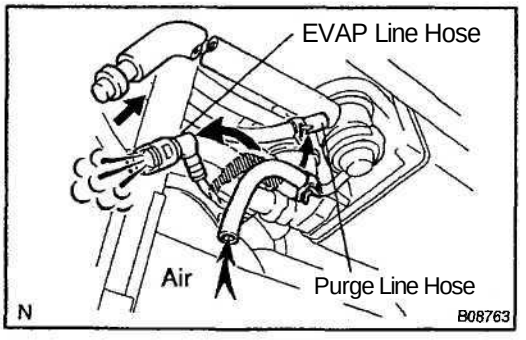

7. INSPECT FUEL CUTOFF VALVE AND FILL CHECK VALVE

(a) Disconnect the purge line hose and EVAP line hose from the charcoal canister.
(b) Plug the cap to the air drain hose.
(c) Pressurize 4 kPa (41 gf/cm^2, 0.58 psi) to the purge port and check that there is ventilation through the EVAP line hose.

HINT:
In the condition that the fuel is full, as the float value of the fill check valve is closed and has no ventilation, it is necessary to check the fuel amount (volume).

(d) Check if there is anything stuck in the vent line hose and EVAP line hose.

If there is nothing stuck in them, replace the fuel cut off valve and fill check valve.

(e) Reconnect the purge line hose and EVAP line hose to the charcoal canister.

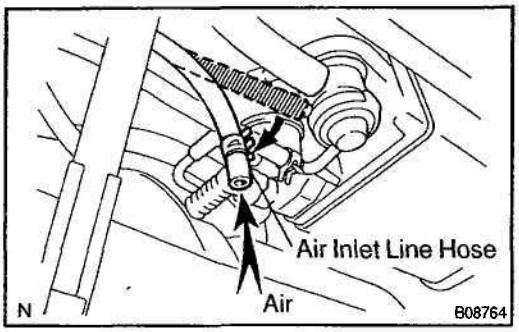

8. **CHECK AIR INLET LINE**

(a) Disconnect the air inlet line hose from the charcoal canister.

(b) Check that there is ventilation in the air inlet line.

(c) Reconnect the air inlet line hose to the charcoal canister.

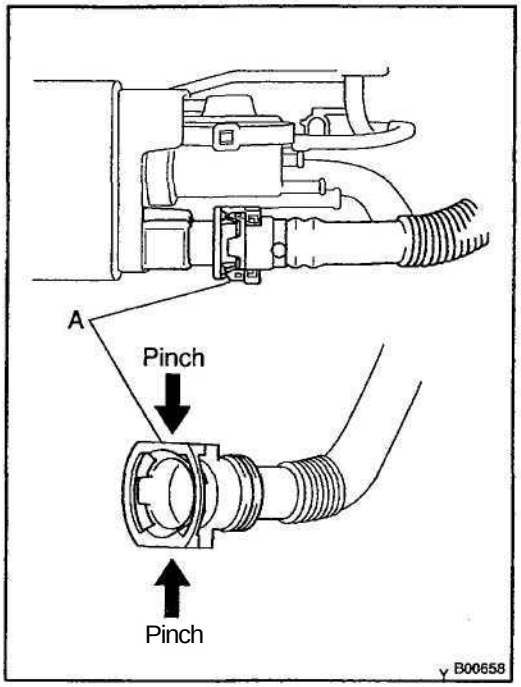

9. **REMOVE CHARCOAL CANISTER ASSEMBLY**

(a) Disconnect the VSV connector.

(b) Disconnect the purge line hose, EVAP line hose and air inlet line hose from the charcoal canister.

(c) Disconnect the vent line hose from charcoal canister.

(1) Push the connector deep inside.

(2) Pinch portion A.

(3) Pull out the connector.

(d) Remove the 3 nuts and charcoal canister assembly.

EC

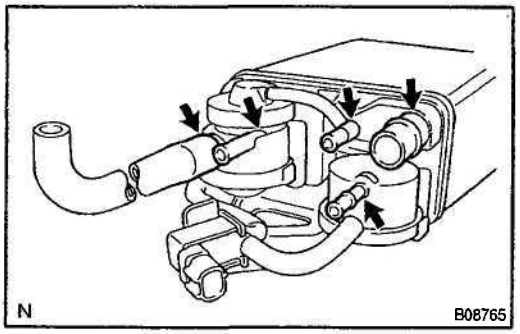

10. INSPECT CHARCOAL CANISTER

(a) Visually check the charcoal canister for cracks or damage.

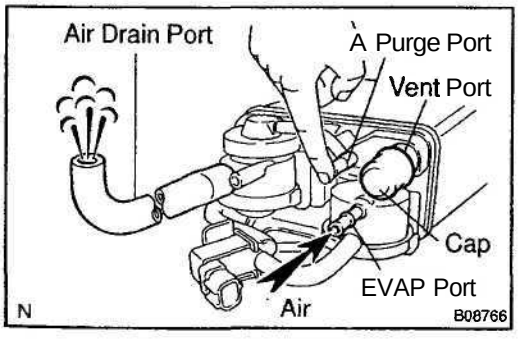

(b) Inspect the charcoal canister operation.

(1) Plug the vent port with a cap.

(2) While holding the purge port closed, blow air (1.76 kPa, 18 gf/cm^2, 0.26 psi) into the EVAP port and check that air flows from the air drain port.

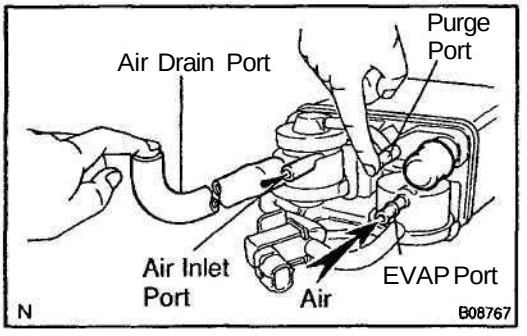

(3) While holding the purge port and the air drain port closed, blow air (1.76 kPa, 18 gf/cm^2, 0.26 psi) into the EVAP port and check that air does not flow from the air inlet port.

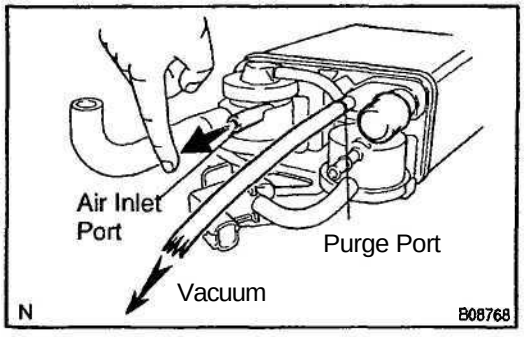

(4) Apply vacuum (3.43 kPa, 25.7 mmHg, 1.01 in.Hg) to the purge port, check that the vacuum does not decrease when the air inlet port is closed, and check that the vacuum decreases when the air inlet port is released.

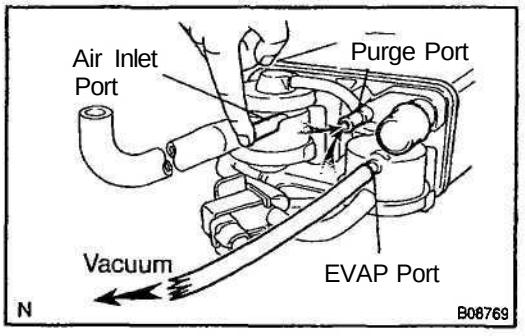

(5) While holding the air inlet port closed, apply vacuum (3.43 kPa, 25.7 mmHg, 1.01 in.Hg) to the EVAP port and check that air flows into the purge port.

If a problem is found, replace the charcoal canister.

(6) Remove the cap from the vent port.

11. INSPECT VSV FOR EVAP
(See page SF–57)
12. **INSPECT VSV FOR CANISTER CLOSED VALVE (CCV)**
(See page SF-59)
13. **INSPECT VAPOR PRESSURE SENSOR**
(See page SF–65)
14. **REINSTALL CHARCOAL CANISTER ASSEMBLY**

THREE-WAY CATALYTIC CONVERTER (TWC) SYSTEM

EC02K-04

INSPECTION

1. CHECK TWC FOR DENTS OR DAMAGE

If any port of the heat insulator is damaged or dented to the extent that it contacts the three-way catalytic converter, repair or replace it.

2. CHECK EXHAUST PIPE CONNECTIONS FOR LOOSENESS OR DAMAGE

3. CHECK EXHAUST PIPE CLAMPS FOR WEAKNESS, CRACKS OR DAMAGE

4. CHECK HEAT INSULATOR FOR DAMAGE

5. CHECK FOR ADEQUATE CLEARANCE BETWEEN EXHAUST SYSTEM AND HEAT INSULATOR ON THE BODY

-MEMO-

SFI

SFI SYSTEM SF–1
FUEL PUMP SF–6
FUEL PRESSURE REGULATOR SF–15
INJECTOR SF–18
FUEL TANK AND LINE SF-26
MASS AIR FLOW (MAF) METER SF-29
THROTTLE BODY SF-33
IDLE AIR CONTROL (IAC) VALVE SF–40
CAMSHAFT TIMING OIL CONTROL VALVE SF–46
EFI MAIN RELAY SF–52
CIRCUIT OPENING RELAY SF–53
VSV FOR INTAKE AIR CONTROL VALVE SF-54
VSV FOR EVAPORATIVE EMISSION (EVAP) SF-56
VSV FOR CANISTER CLOSED VALVE (CCV) SF–58
VSV FOR PRESSURE SWITCHING VALVE SF–60
ENGINE COOLANT TEMPERATURE (ECT) SENSOR SF–62
VAPOR PRESSURE SENSOR SF–64
KNOCK SENSOR SF–66
HEATED OXYGEN SENSOR SF–69
ENGINE CONTROL MODULE (ECM) SF–71
FUEL CUT RPM SF-73

SF

SFI SYSTEM

PRECAUTION

SF0Z7-02

1. BEFORE WORKING ON THE FUEL SYSTEM , DISCONNECT THE NEGATIVE (-) TERMINAL CABLE FROM THE BATTERY

HINT:

Any diagnostic trouble code retained by the computer will be erased when the negative (-) terminal cable is removed from the battery. Therefore, if necessary, read the diagnosis before removing the negative (-) terminal cable from the battery.

2. DO NOT SMOKE OR WORK NEAR AN OPEN FLAME WHEN WORKING ON THE FUEL SYSTEM

3. KEEP GASOLINE AWAY FROM RUBBER OR LEATHER PARTS

4. MAINTENANCE PRECAUTIONS

(a) In event of engine misfire, these precautions should be taken.

(1) Check proper connection to battery terminals, etc.

(2) After repair work, check that the ignition coil terminals and all other ignition system lines are reconnected securely.

(3) When cleaning the engine compartment, be especially careful to protect the electrical system from water.

(b) Precautions when handling oxygen sensor.

(1) Do not allow oxygen sensor to drop or hit against an object.

(2) Do not allow the sensor to come into contact with water.

If vehicle is Equipped with Mobile Radio System (HAM, CB, etc.)

If the vehicle is equipped with a mobile communication system, refer to the precaution in the IN section.

5. AIR INDUCTION SYSTEM

(a) Separation of the engine oil dipstick, oil filler cap, PCV hose, etc. may cause the engine to run out of turn.

(b) Disconnection, looseness or cracks in the parts of the air induction system between the throttle body and cylinder head will allow air suction and cause the engine to run out of turn.

6. ELECTRONIC CONTROL SYSTEM

(a) Before removing SFI wiring connectors, terminals, etc., first disconnect the power by either turning the ignition switch to LOCK or disconnecting the negative (-) terminal cable from the battery.

HINT:

Always check the diagnostic trouble code before disconnecting the negative (-) terminal cable from the battery.

SF

(b) When installing the battery, be especially careful not to incorrectly connect the positive (+) and negative (-) cables.
(c) Do not permit parts to receive a severe impact during removal or installation. Handle all SFI parts carefully, especially the ECM.
(d) Be careful during troubleshooting as there are numerous transistor circuit, and even slight terminal contact can cause further troubles.
(e) Do not open the ECM cover.
(f) When inspecting during rainy weather, take care to prevent entry of water. Also, when washing the engine compartment, prevent water from getting on the SFI parts and wiring connectors.
(g) Parts should be replaced as an assembly.
(h) Care should be taken when pulling out and inserting wiring connectors.
(1) Release the lock and pull out the connector, pulling on the connectors.
(2) Fully insert the connector and check that it is locked.

SF

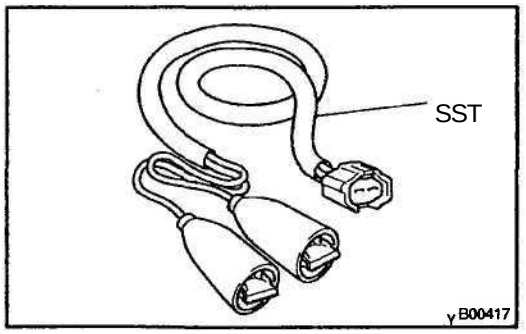

(i) Use SST for inspection or test of the injector or its wiring connector.
SST 09842-30080

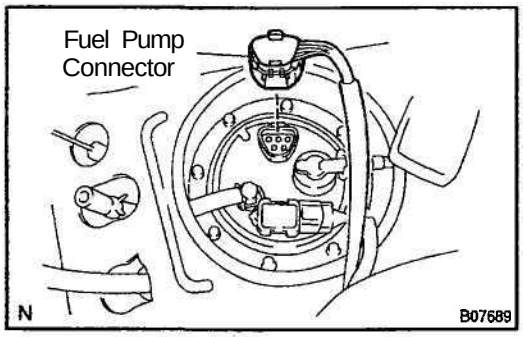

7. FUEL SYSTEM

(a) When disconnecting the high fuel pressure line, a large amount of gasoline will spill out, so observe these procedures.
(1) Disconnect the fuel pump connector.
(2) Start the engine. After the engine has stopped on its own, turn the ignition switch to LOCK.
(3) Disconnect the fuel tube (See page SF–11).
(4) Drain the fuel remained inside the fuel tube.

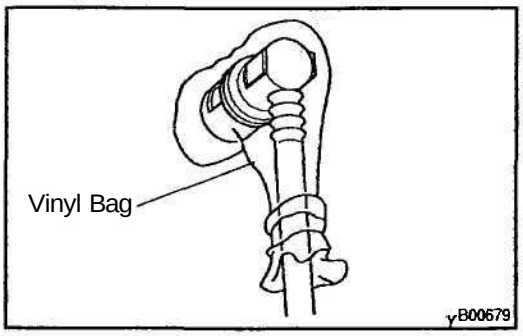

(5) Prevent the disconnected fuel tube from damaging and mixing foreign objects by covering them with a vinyl bag.

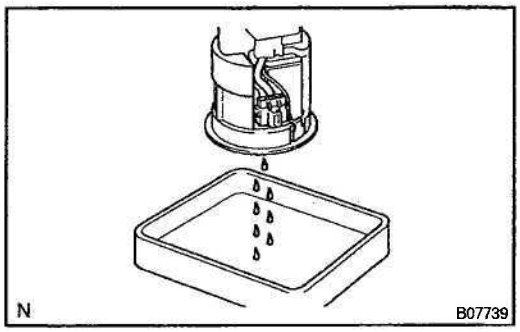

(6) Put a container under the connection.

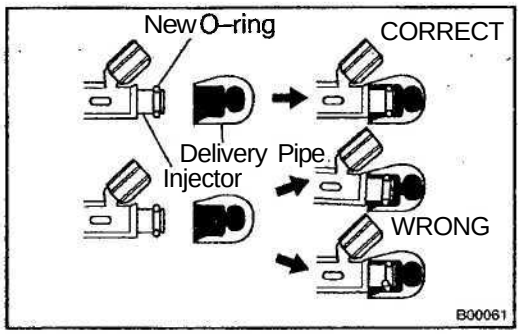

(b) Observe these precautions when removing and installing the injector.
(1) Never reuse the O–ring.
(2) When placing a new O–ring on the injector, take care not to damage it in any way.
(3) Coat a new O–ring with spindle oil or gasoline before installing never use engine, gear or brake oil.

SF

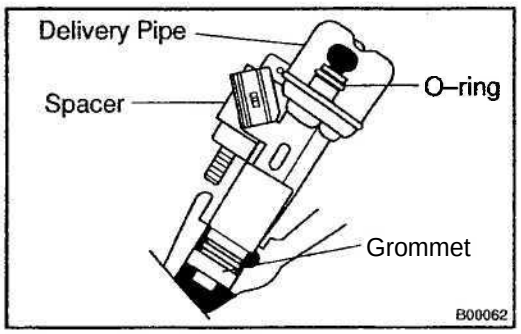

(c) Install the injector to the delivery pipe and cylinder head, as shown in the illustration. Before in installing the injector, must apply spindle oil or gasoline on the place where a delivery pipe or a cylinder head touches on O–ring of the injector.

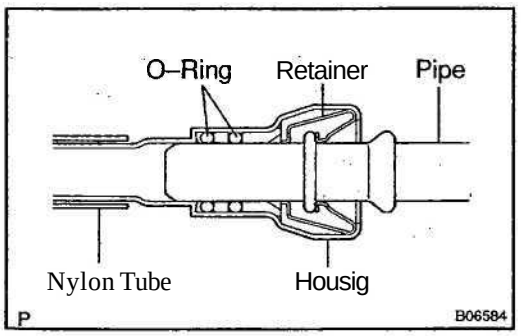

(d) Observe these precautions when disconnecting the fuel delivery pipe. The structure of the metallic connector is shown as left.
(1) Remove the fuel pipe clamp.

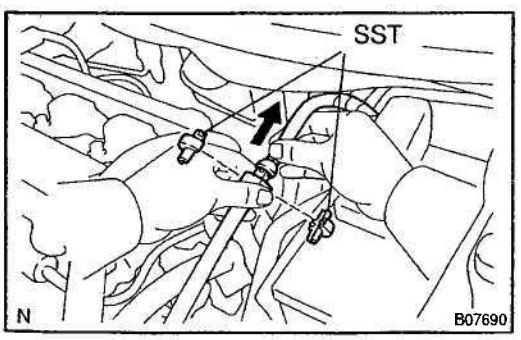

(2) Get the metallic connector of the fuel tube assembly, pull it out towards the rear and hold it as it is.
(3) Assemble SST to the connection as shown.
SST 09268–21010

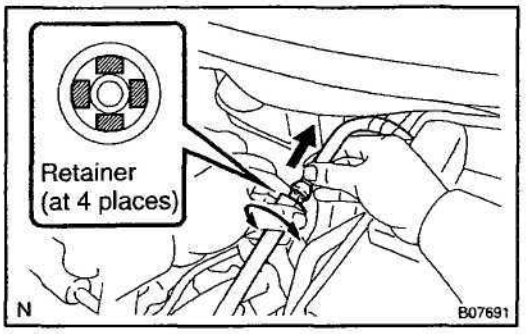

(4) Turn SST, align the retainers inside the connector with SST chamfered parts and incert SST into the connector.

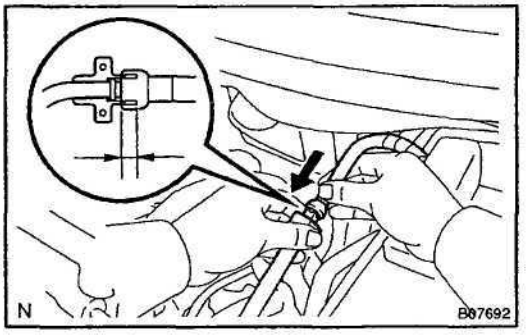

(5) Hold SST as it at step 4, push the connector towards SST to put the retainers on SST champfered parts.
(6) Slide SST and the connector together towards the fuel tube assembly.

SF

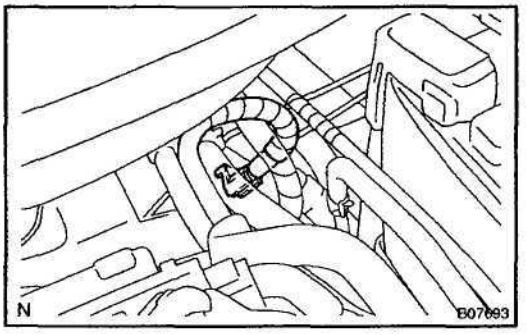

(e) Observe these precautions when disconnecting the fuel tube connector (quick type).
(1) Remove the fuel pipe clamp.
(2) Check if there is any dirt like mud on the pipe and around the connector before disconnecting them and clean the dirt away.

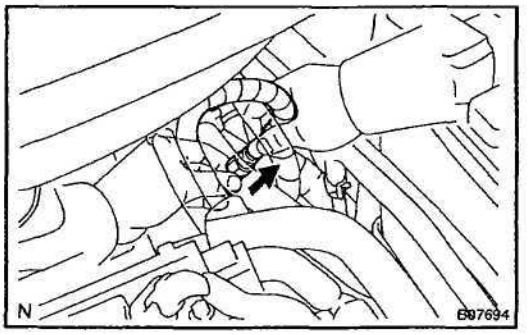

(3) Be sure to disconnect with hands.
(4) When the connector and the pipe are stuck, pinch the retainer between the hands, push and pull the connector to free to disconnect and pull it out. Do not use any tool at this time.
(5) Inspect if there is any dirt or the likes on the seal surface of the disconnected pipe and clean it away.

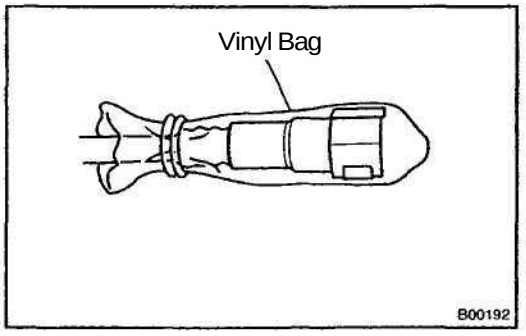

(6) Prevent the disconnected pipe and connector from damaging and mixing foreign objects by covering them with a vinyl bag.

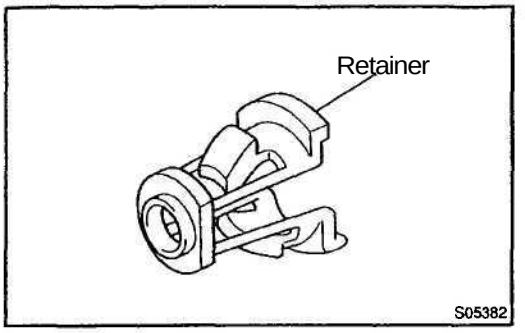

(f) Observe these precautions when connecting the fuel tube connector (quick type).
(1) Do not reuse the retainer removed from the pipe.
(2) Must use hands without using tools when to remove the retainer from the pipe.
(3) Check if there is any damage or foreign objects on the connected part of the pipe.

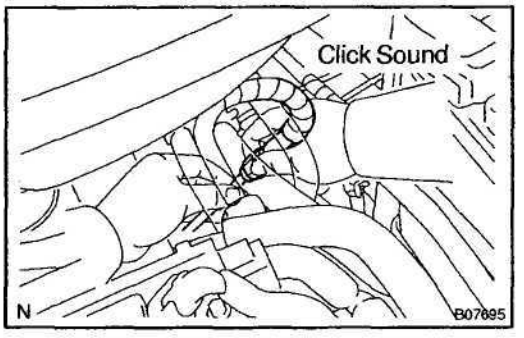

(4) Match the axis of the connector with axis of the pipe, and push in the connector until retainer makes a "click" sound. In case that the connections is tight, apply little amount of new engine oil on the tip of the pipe.
(5) After having finished the connection, check if the pipe and the connector are securely connected by pulling them.

SF

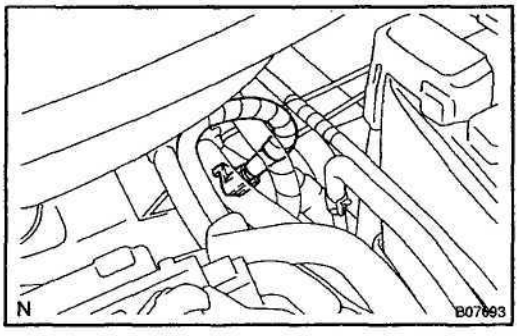

(6) Install the fuel pipe clamp.
(7) Check if there is any fuel leakage.

(g) Observer these precautions when handling nylon tube.
(1) Pay attention not to turn the connected part of the nylon tube and the quick connector with force when connecting them.
(2) Pay attention not to kink the nylon tube.
(3) Do not remove the nylon tube.
(4) Must not close the piping with the nylon tube by bending it.

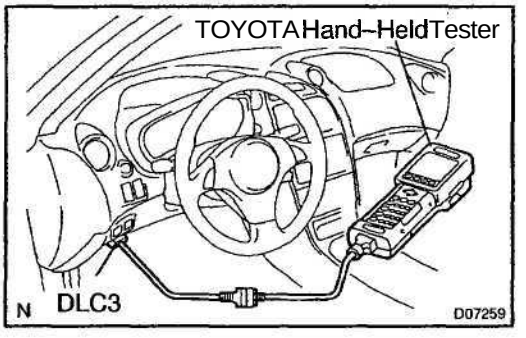

(h) Check that there are no fuel leaks after doing maintenance anywhere on the fuel system.
(1) Connect the TOYOTA hand-held tester to the DLC3.
(2) Turn the ignition switch ON and push TOYOTA hand-held tester main switch ON.
(3) Select the active test mode on the TOYOTA hand-held tester.
(4) Please refer to the TOYOTA hand-held tester operator's manual for further details.
(5) If you have no TOYOTA hand-held tester, connect the positive (+) and negative (-) leads from the battery to the fuel pump connector.
(See page SF-6)
(6) Check that there are no leaks from any part of the fuel system.
(7) Turn the ignition switch to LOCK.
(8) Disconnect the TOYOTA hand-held tester from the DLC3.

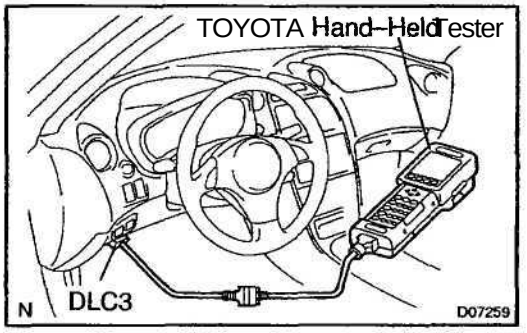

FUEL PUMP

ON–VEHICLE INSPECTION

SF058-05

1. CHECK FUEL PUMP OPERATION

(a) Connect the TOYOTA hand–held tester to the DLC3.

(b) Turn the ignition switch ON and TOYOTA hand–held tester main switch ON.

NOTICE:

Do not start the engine.

(c) Select the active test mode on the TOYOTA hand–held tester.

(d) Please refer to the TOYOTA hand–held tester operator's manual for further details.

SF

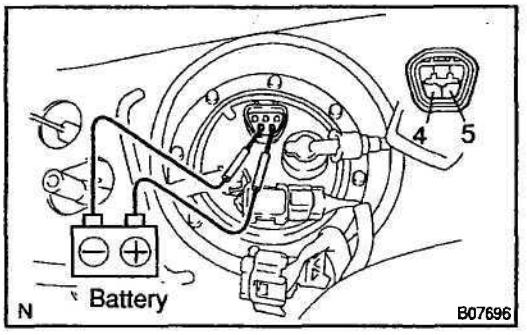

(e) If you have no TOYOTA hand–held tester, connect the positive (+) lead from the battery to terminal 4 of the connecter, and the negative (-) lead to terminal 5.

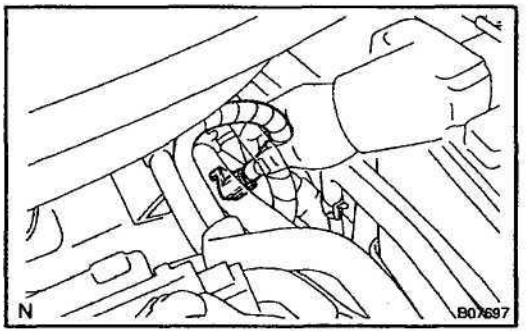

(f) Check that there is pressure in the fuel inlet pipe from the fuel line.

HINT:

If there is fuel pressure, you will hear the sound if fuel following. If there is no pressure, check these parts, Fusible link, Fuses, EFI Main relay, Fuel pump, ECM, and Witting connector.

(g) Turn the ignition switch to LOCK.

(h) Disconnect the TOYOTA hand-held tester from the DLC3.

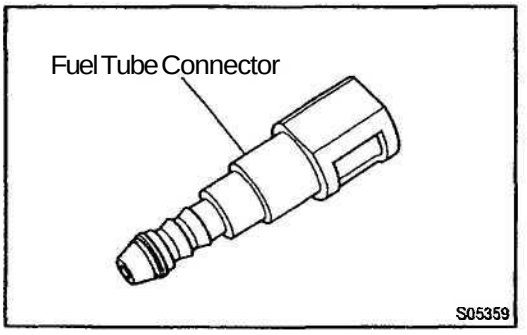

2. CHECK FUEL PRESSURE

(a) Check the battery positive voltage is above 12 V.

(b) Disconnect the negative (-) terminal cable from the battery.

(c) Purchase the new fuel tube and take out the fuel tube connector from its pipe.

Part No.:

1ZZ–FE: 23901–22100

2ZZ–GE: 23271–88600

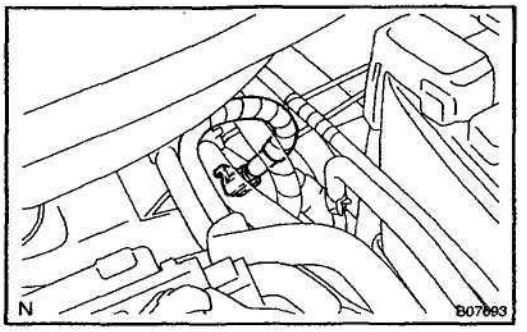

(d) Remove the fuel pipe clamp.

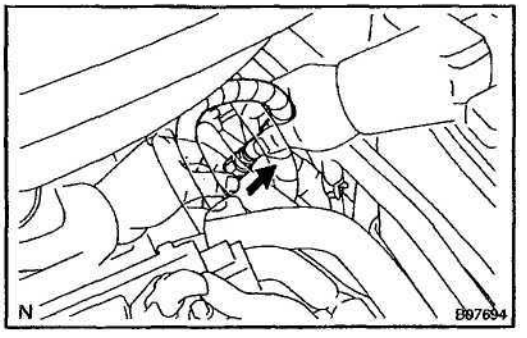

(e) Disconnect the fuel tube (fuel tube connector) from the fuel pipe.

CAUTION:

- **Perform disconnecting operations of the fuel tube connector (quick type) after observing the precautions.**
- **As there is retained pressure in the fuel pipe line, prevent if from splashing inside the engine comportment.**

SF

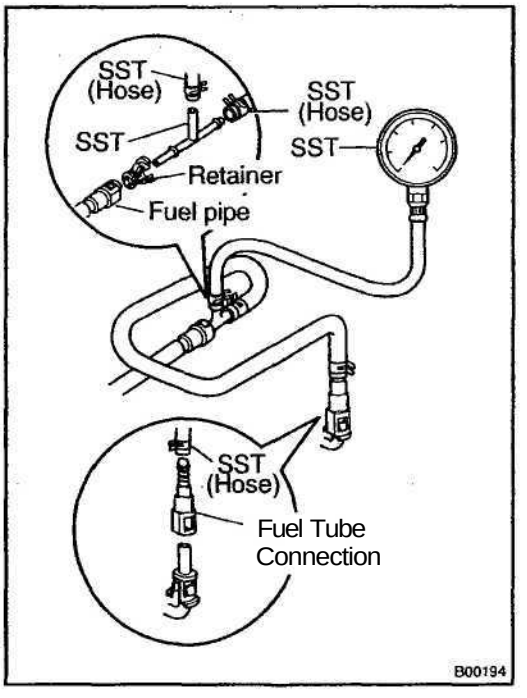

(f) Install SST (pressure gauge) as shown in the illustration by using SST and fuel tube connector.

SST 09268–41047 (95336–08070), 09268-45014 (09268–41200, 09268–41220, 09268–41250)

(g) Wipe off any splattered gasoline.

(h) Reconnect the negative (-) terminal cable to the battery.

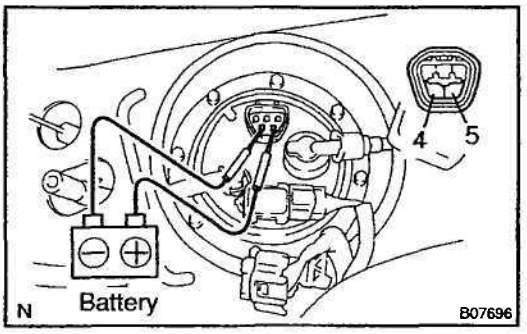

(i) Connect the TOYOTA hand–held tester to the DLC3.
If you have no TOYOTA hand–held tester, connect the positive (+) lead from the battery to terminal 4 of the connecter, and the negative (-) lead to terminal 5.

(j) Measure the fuel pressure.
Fuel pressure:
301 - 347 kPa (3.1 - 3.5 kgf/cm^2, 44 – 50 psi)

If pressure is high, replace the fuel pressure regulator.
If pressure is low, check the Fuel hoses and connections, Fuel pump, Fuel filter, and Fuel pressure regulator.

(k) Disconnect the TOYOTA hand-held tester from the DLC3.

(l) Start the engine.

(m) Measure the fuel pressure at idle.
Fuel pressure:
301 - 347 kPa (3.1 - 3.5 kgf/cm^2, 44 – 50 psi)

(n) Stop the engine.

(o) Check that the fuel pressure remains as specified for 5 minutes after the engine has stopped.
Fuel pressure:
147 kPa (1.5 kgf/cm^2, 21 psi) or more

If pressure is not as specified, check the fuel pump, pressure regulator and/or injectors.

(p) After checking fuel pressure, disconnect the negative (-) terminal cable from the battery and carefully, remove the SST and fuel tube connector to prevent gasoline from splashing.
SST 09268-41047 (95336-08070), 09268–45014 (09268–41200, 09268–41220, 09268–41250)

SF

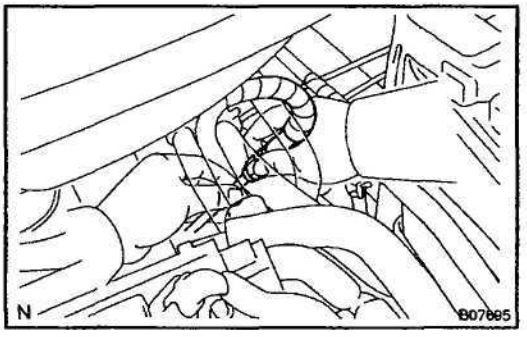

(q) Reconnect the fuel tube (fuel tube connector).
CAUTION:
Perform connecting operations of the fuel tube connector (quick type) after observing the precautions.

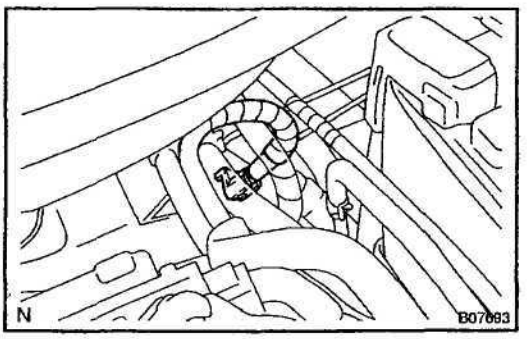

(r) Install the fuel pipe clamp.

(s) Reconnect the negative (-) terminal cable to the battery.

(t) Check for fuel leakage.

3. REMOVE REAR SEAT CUSHION

4. REMOVE FLOOR SERVICE HOLE COVER

5. DISCONNECT FUEL PUMP & SENDER GAUGE CONNECTOR

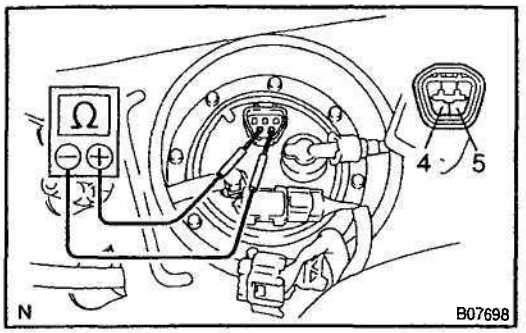

6. INSPECT FUEL PUMP RESISTANCE

Using an ohmmeter, measure the resistance between terminals 4 and 5.

Resistance: 0.2 - 3.0 Ω at 20°C (68 °F)

If the resistance is not as specified, replace the fuel pump.

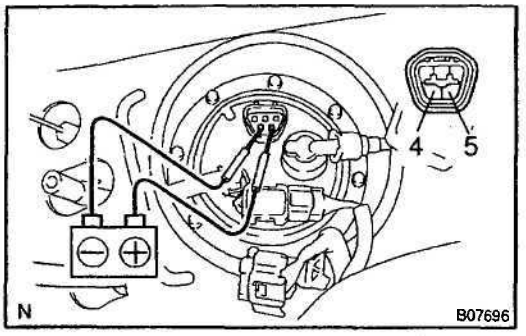

7. INSPECT FUEL PUMP OPERATION

Connect the positive (+) lead from the battery to terminal 4 of the connector and the negative (-) terminal 5. Check that the pump operates.

NOTICE:

- **These tests must be done quickly (within 10 seconds) to prevent the coil burning out.**
- **Keep fuel pump as far away from the battery as possible.**
- **Always do the switching at the battery side.**

If operation is not as specified, replace the fuel pump or lead wire.

8. RECONNECT FUEL PUMP & SENDER GAUGE CONNECTOR

9. REINSTALL FLOOR SERVICE HOLE COVER

10. REINSTALL REAR SEAT CUSHION

SF

SF099-04

COMPONENTS

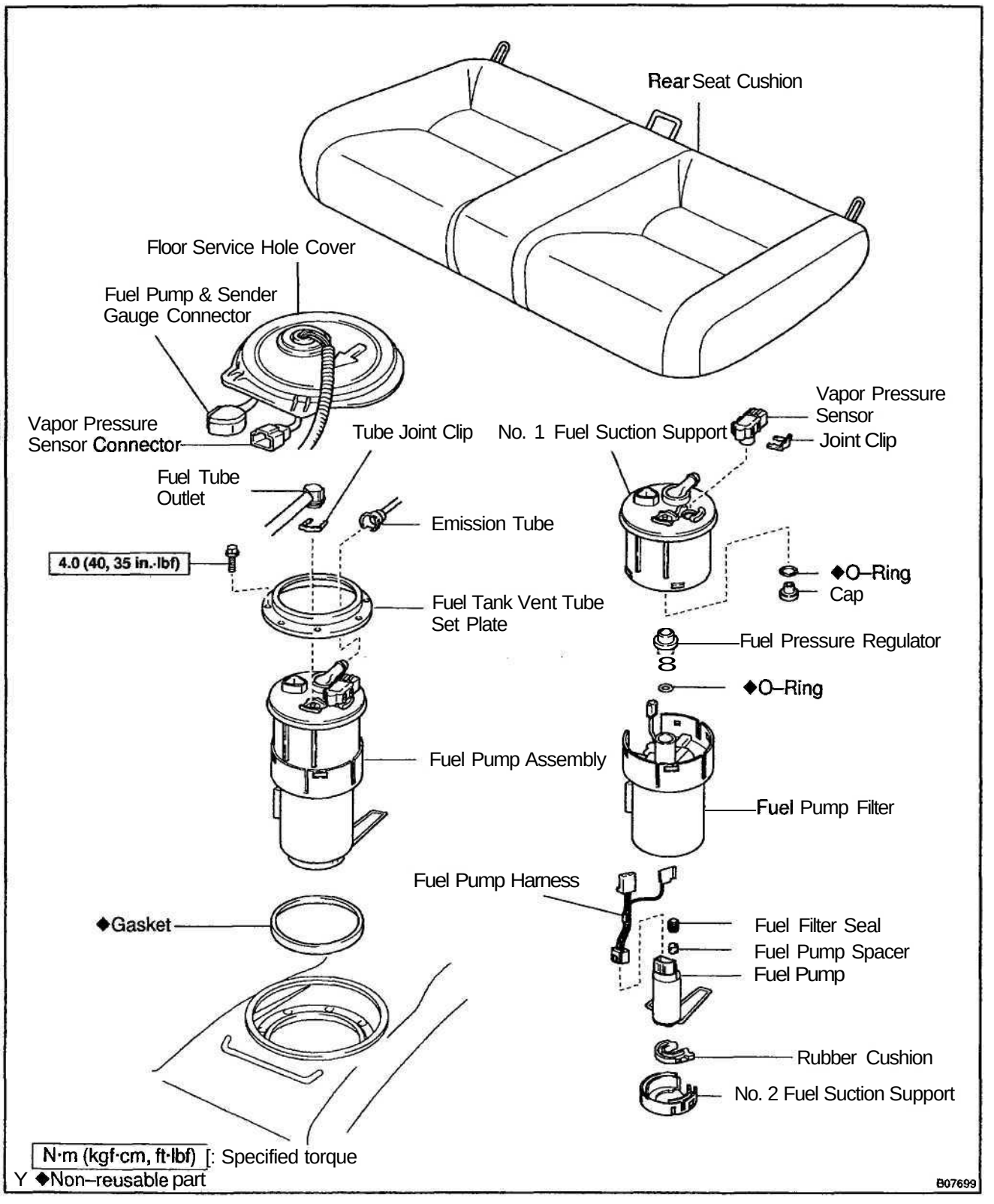

SF09A-04

REMOVAL

CAUTION:
Do not smoke or work near an open flame when working on the fuel pump.

1. REMOVE REAR SEAT CUSHION

2. REMOVE FLOOR SERVICE HOLE COVER

3. DISCONNECT FUEL PUMP & SENDER GAUGE CONNECTOR AND VAPOR PRESSURE SENSOR CONNECTOR

4. DISCONNECT FUEL TUBE AND EMISSION TUBE

(a) Wash away the mud, dust and the likes on the fuel suction plate with water.

(b) Pull off the tube joint clip from the No. 1 fuel suction plate.

(c) Disconnect the fuel tube from the fuel pump assembly.

(d) Disconnect the emission tube from the fuel pump assembly.

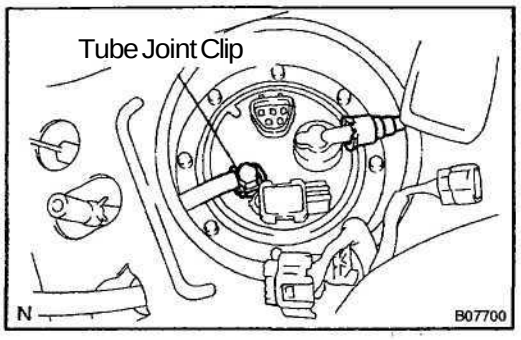

(e) Attach the tape in order to protect the port portion from the dust.

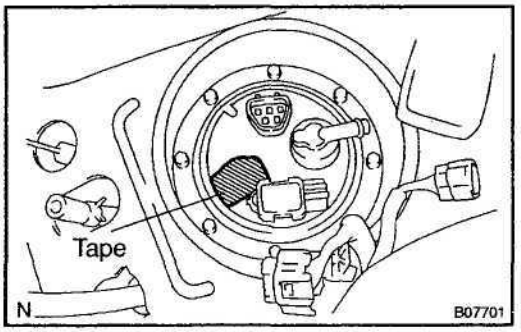

(f) Protect the disconnected fuel tube from damage and foreign material by covering it with a plastic bag.

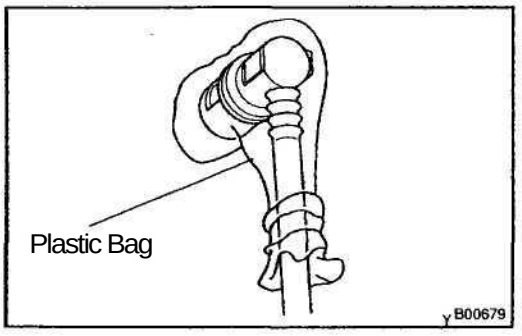

5. REMOVE FUEL PUMP ASSEMBLY FROM FUEL TANK

(a) Remove the 8 bolts and fuel tank vent tube set plate.

(b) Pull out the fuel pump assembly.

NOTICE:

- **Do not damage the fuel pump filter.**
- **Be careful that the arm of the sender gauge should not bent.**

(c) Remove the gasket from the pump assembly.

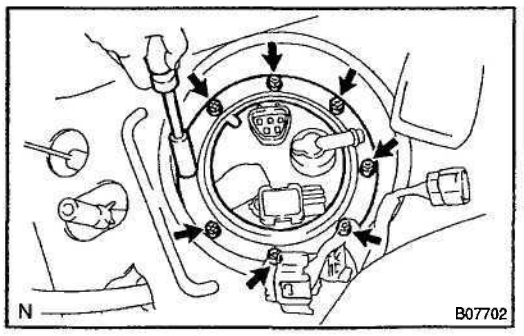

SF13P-02

DISASSEMBLY

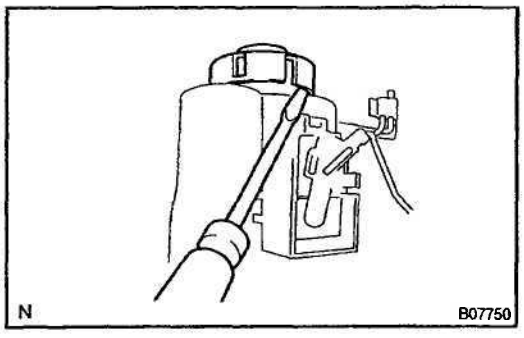

1. REMOVE NO. 2 FUEL SUCTION SUPPORT

(a) Using a small screwdriver, remove the No. 2 fuel suction support.

(b) Remove the rubber cushion.

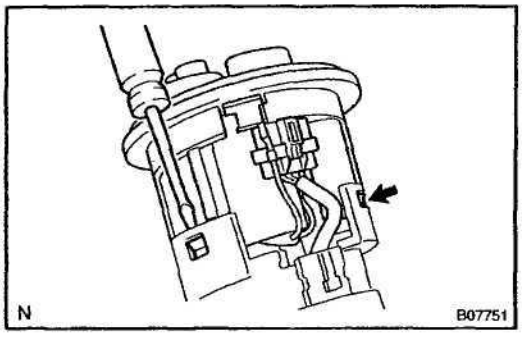

2. REMOVE NO. 1 FUEL SUCTION SUPPORT

(a) Disconnect the fuel sender gauge connector and earth plate.

(b) Using a small screwdriver, remove the No. 1 fuel suction support.

NOTICE:

Do not damage the fuel suction support and fuel suction plate.

(c) Disconnect the fuel pump harness from the No. 1 fuel suction support and fuel pump.

3. REMOVE VAPOR PRESSURE SENSOR

Pull off the joint clip and remove the vapor pressure sensor from No. 1 fuel suction support.

4. REMOVE FUEL PRESSURE REGULATOR

Pull out the fuel pressure regulator and O-ring from the fuel filter.

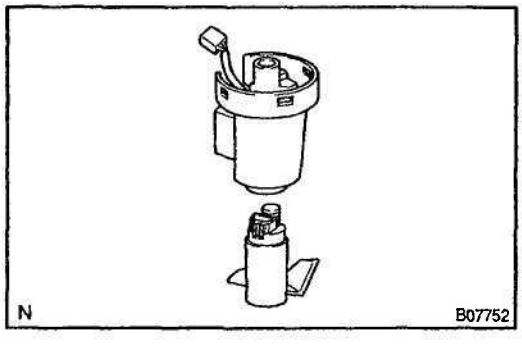

5. REMOVE FUEL PUMP

Remove the pump from the fuel filter.

SF13O-02

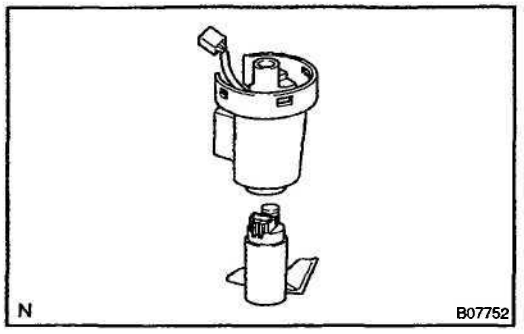

REASSEMBLY

1. INSTALL FUEL PUMP

Connect the fuel pump to the fuel filter.

2. INSTALL FUEL PRESSURE REGULATOR

(a) Install the O–ring to the pressure regulator.

HINT:

Apply a light coat of gasoline to a new O–ring, and install it to the pressure regulator.

(b) Connect the pressure regulator to the fuel filter.

3. INSTALL NO. 1 FUEL SUCTION SUPPORT

(a) Connect the fuel pump harness to the No. 1 fuel suction support and fuel pump.

(b) Install the No. 1 fuel suction support to the fuel filter.

(c) Connect the fuel sender gauge connector and earth plate.

4. INSTALL NO. 2 FUEL SUCTION SUPPORT

(a) Install the rubber cushion.

(b) Install the No. 2 fuel suction support to the No. 1 fuel suction support.

5. INSTALL VAPOR PRESSURE SENSOR

Install the vapor pressure sensor and connect the joint clip to the No. 1 fuel suction support.

SF09D-04

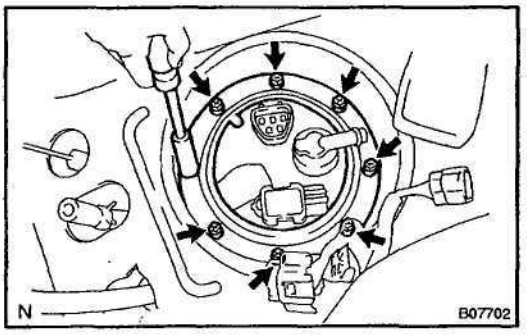

INSTALLATION

1. INSTALL FUEL PUMP ASSEMBLY

(a) Install the new gasket to the fuel pump assembly.

(b) Install the fuel pump assembly to the fuel tank.

NOTICE:

- **Do not damage the fuel pump filter.**
- **Be careful that the arm of the sender gauge should not bent.**

(c) Install the 8 bolts and fuel tank vent tube set plate from the fuel tank.

Torque: 4.0 N·m (40 kgf·cm, 35 in.·lbf)

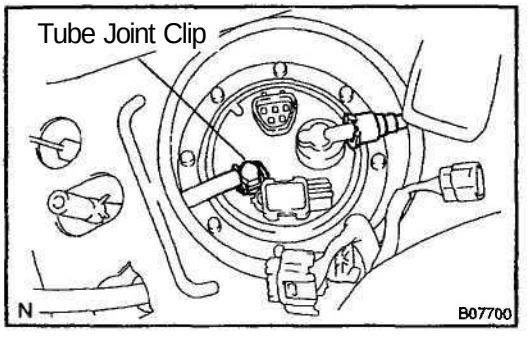

2. CONNECT FUEL TUBE

(a) Clean up around the fuel tube.

(b) Connect the fuel tube and emission tube to the fuel pump assembly.

(c) Connect the tube joint clip to the fuel suction plate.

3. CONNECT FUEL PUMP AND SENDER GAUGE CONNECTOR AND VAPOR PRESSURE SENSOR CONNECTOR

HINT:

Start the engine, check for fuel leakage.

4. INSTALL FLOOR SERVICE HOLE COVER

(a) Install the service hole cover.

(b) Install the floor carpet.

5. INSTALL REAR SEAT CUSHION

FUEL PRESSURE REGULATOR

COMPONENTS

SF09E-04

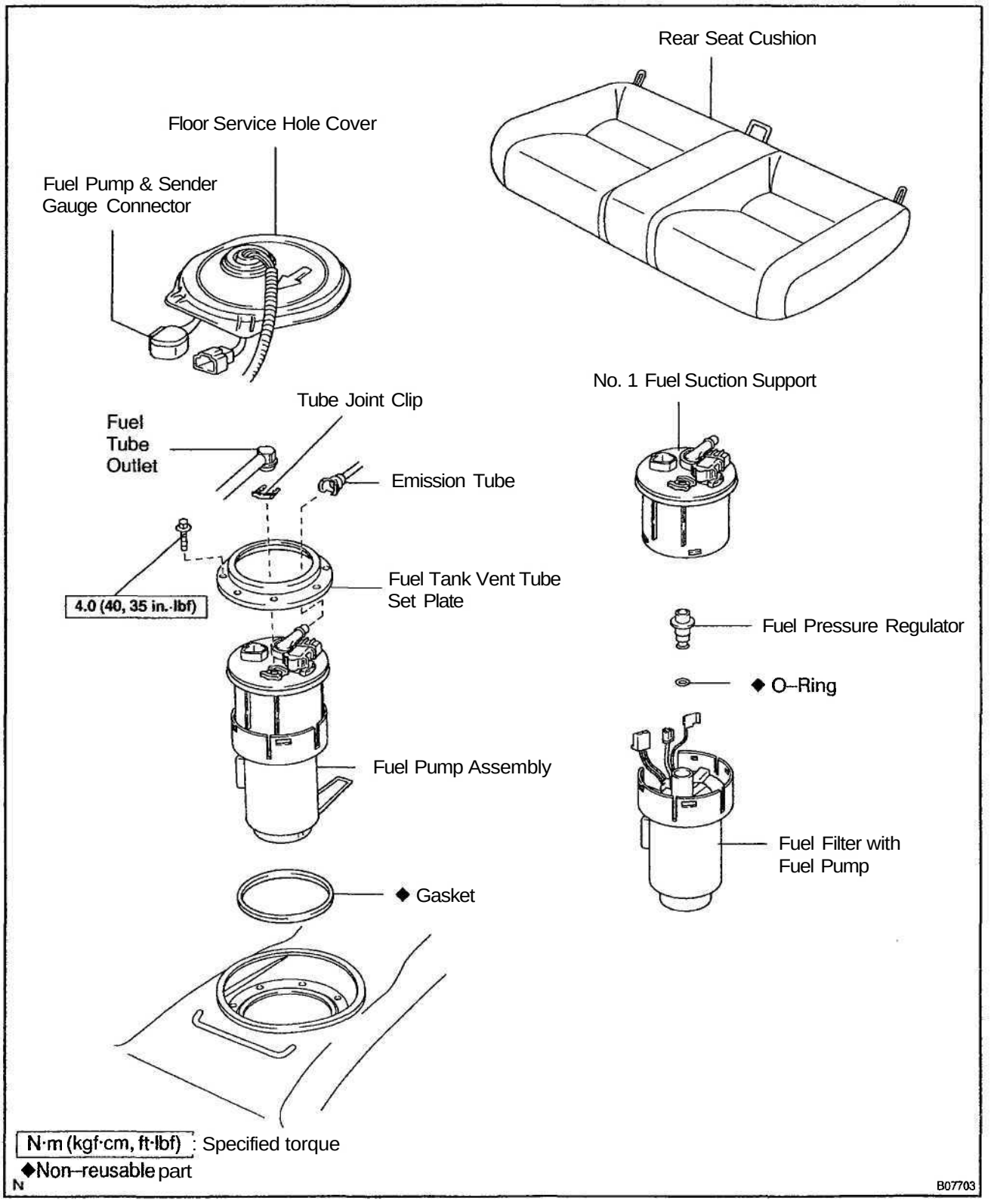

REMOVAL

1. **REMOVE FUEL PUMP ASSEMBLY FROM FUEL TANK (See page SF–11)**
2. **REMOVE NO. 1 FUEL SUCTION SUPPORT (See page SF–12)**
3. **REMOVE FUEL PRESSURE REGULATOR**

(a) Pull out the pressure regulator.

(b) Remove the O–ring from the pressure regulator.

SF0Z6-04

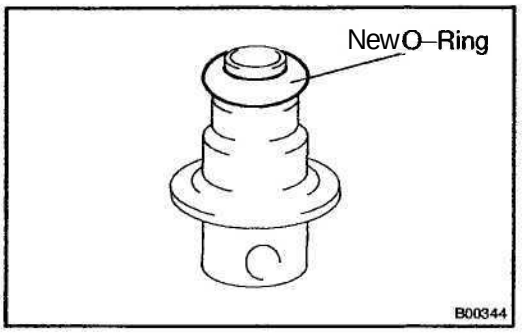

INSTALLATION

1. INSTALL FUEL PRESSURE REGULATOR

(a) Install the O–ring to the pressure regulator.

HINT:

Apply a light coat of gasoline to a new O–ring, and install it to the pressure regulator.

(b) Connect the pressure regulator from the fuel filter.

2. INSTALL NO. 1 FUEL SUCTION SUPPORT
(See page SF–13)

3. INSTALL FUEL PUMP ASSEMBLY TO FUEL TANK
(See page SF–14)

INJECTOR

ON–VEHICLE INSPECTION

SF15O-01

1. REMOVE NO. 2 CYLINDER HEAD COVER

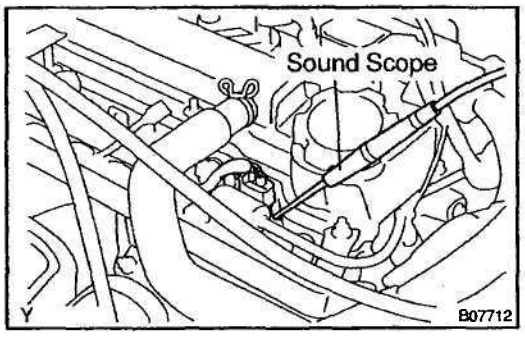

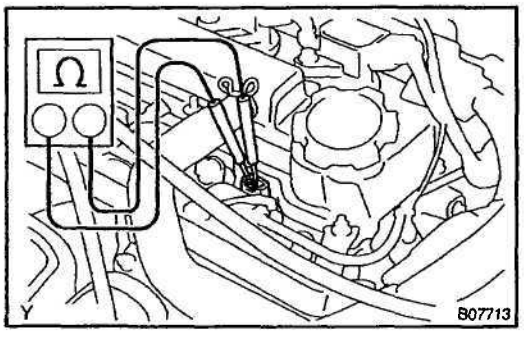

2. CHECK OPERATION SOUND FROM EACH INJECTOR

(a) Connect the PCV hose to cylinder head cover.

(b) With the engine running or cranking, use a sound scope to check that there is normal operating noise in proportion to engine speed.

(c) If you have no sound scope, you can check the injector transmission operation with your finger.

If no sound or unusual sound is heard, check the wiring connector, injector signal from the ECM.

(d) Disconnect the PCV hose from cylinder head cover.

3. INSPECT INJECTOR RESISTANCE

(a) Disconnect the injector connector.

(b) Using an ohmmeter, measure the resistance between the terminals.

Resistance: 13.4 – 14.2 Ω at 20°C (68°F)

If the resistance is not as specified, replace the injector.

(c) Reconnect the injector connector.

4. INSTALL WIRE HARNESS PROTECTOR COVER

(a) Install the wire harness protector cover with bolt and 2 nuts.

(b) Connect the PCV hose to cylinder head cover.

SF1SP-01

COMPONENTS

1ZZ–FE:

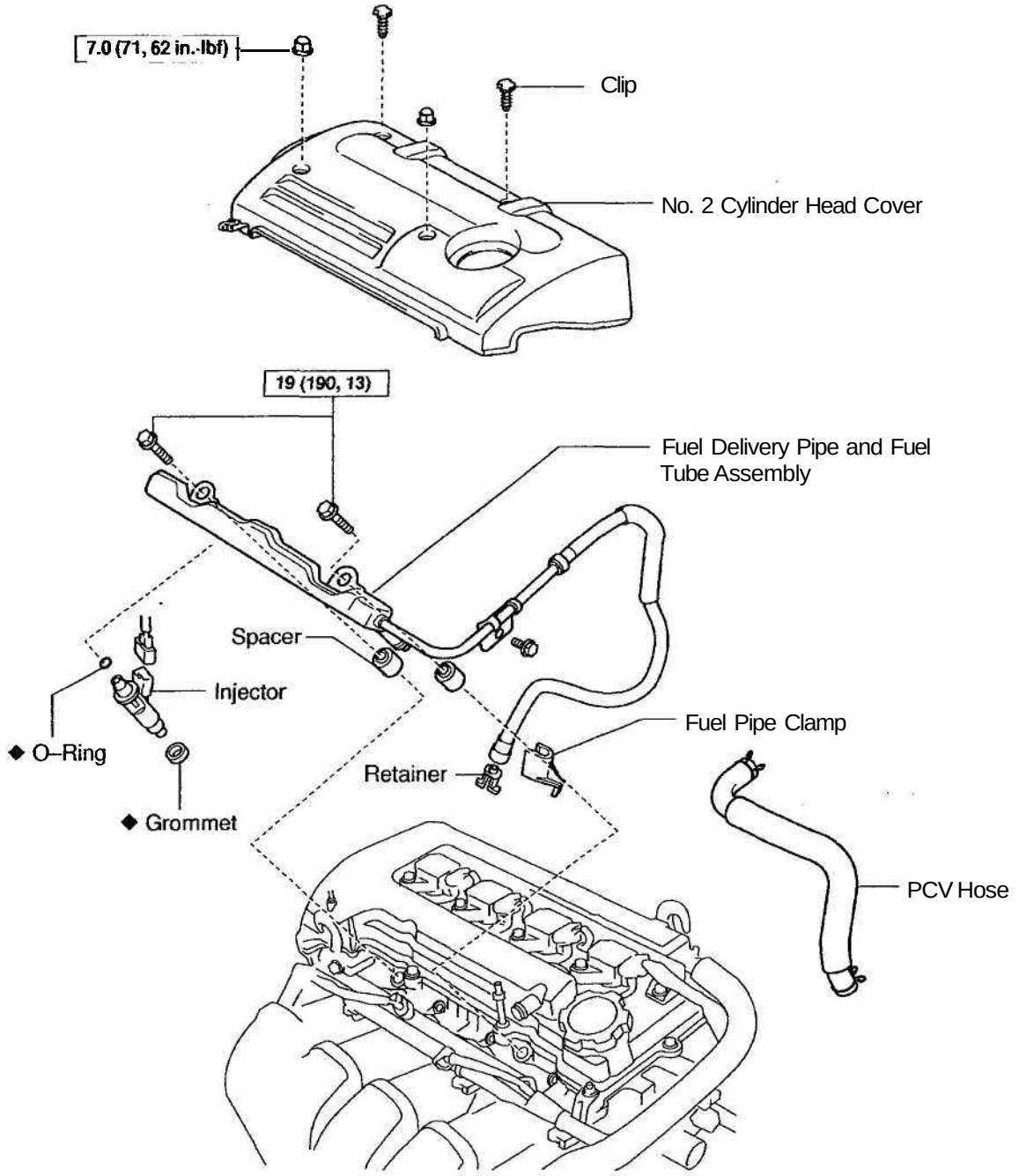

N·m (kgf·cm, ft·lbf) : Specified torque

◆ Non–reusable part

Y

B09173

2ZZ–GE:

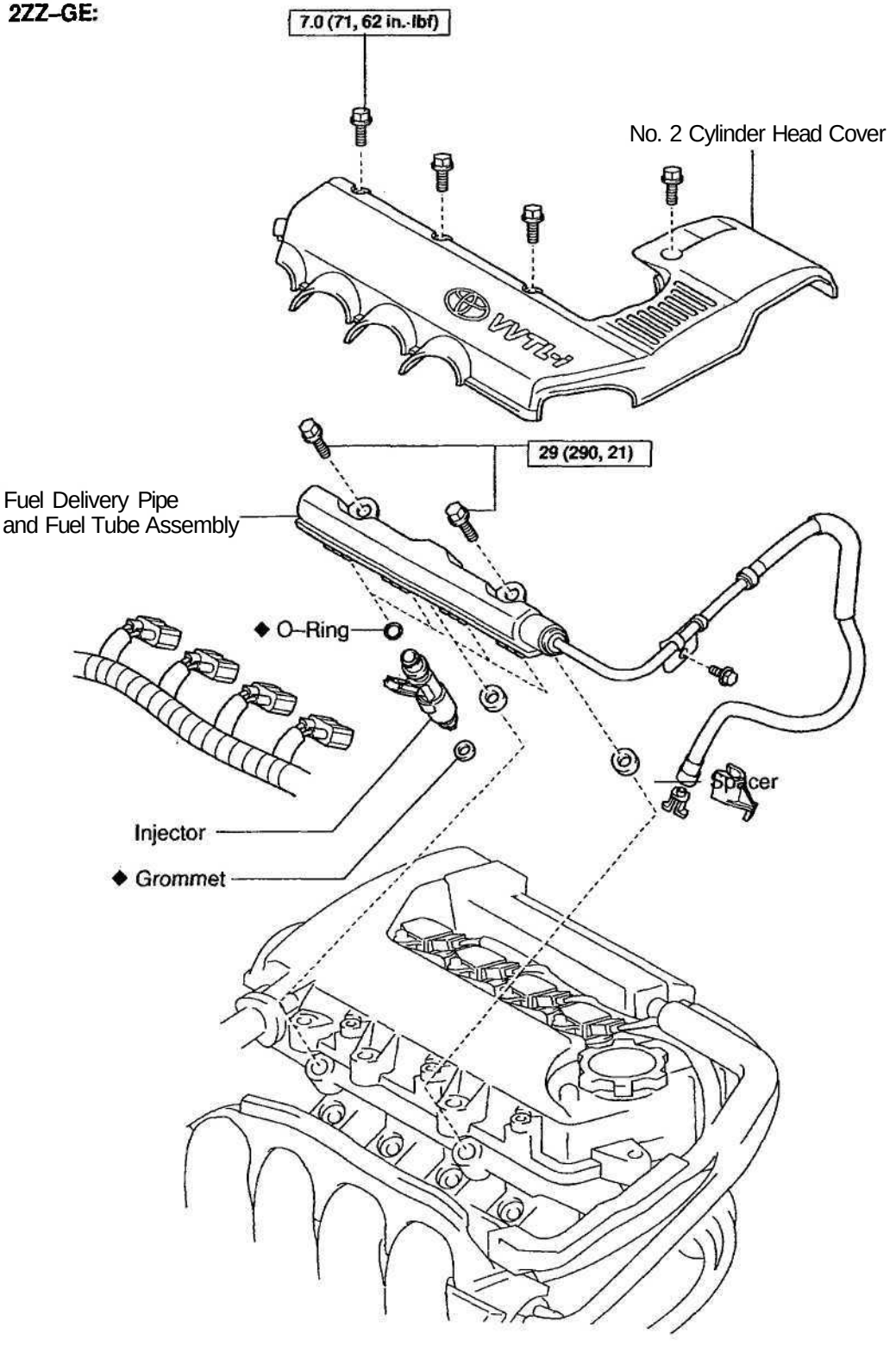

| N·m (kgf·cm, ft·lbf) | : Specified torque

◆ Non–reusable part

B07714

REMOVAL

1. REMOVE NO. 2 CYLINDER HEAD COVER

2. 1ZZ-FE:
REMOVE PCV HOSE

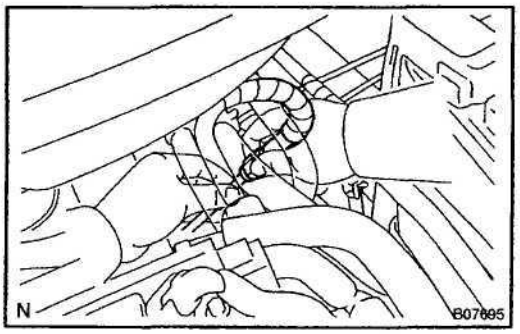

3. DISCONNECT FUEL TUBE

(a) Remove the fuel pipe clamp.

(b) Disconnect the fuel tube (fuel tube connector) from the fuel pipe.

CAUTION:

- **Perform disconnecting operations of the fuel tube connector (quick type) after observing the precautions.**
- **As there is retained pressure in the fuel pipe line, prevent it from splashing inside the engine compartment.**

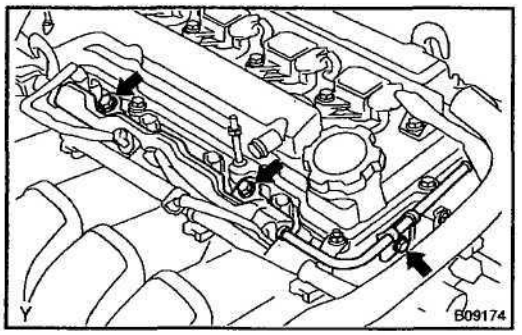

4. REMOVE DELIVERY PIPE AND INJECTORS

NOTICE:

Be careful not to drop the injectors when removing the delivery pipe.

(a) Disconnect the 4 injector connectors from injector.

(b) Remove the 3 bolts and delivery pipe together with the 4 injectors and fuel pipe.

(c) Remove the 2 spacers from the cylinder head.

(d) Pull out the 4 injectors from the delivery pipe.

(e) Remove the O–ring and grommet from each injector.

SF05K-05

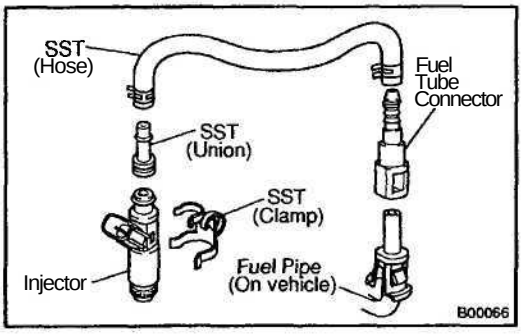

INSPECTION

1. INSPECT INJECTOR INSPECTION

CAUTION:

Keep injector clear of sparks during the test.

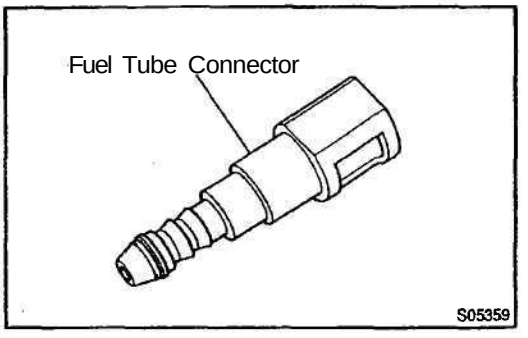

(a) Purchase the new fuel tube and take out the fuel tube connector from its pipe.
Part No. 23901-22010

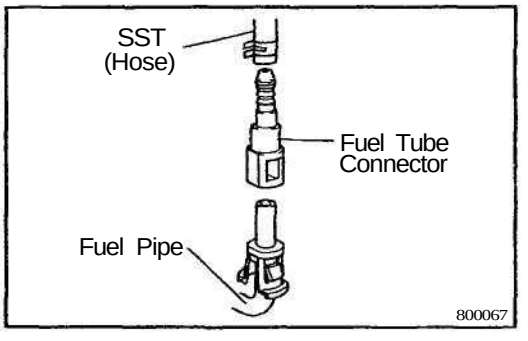

(b) Connect SST (hose) and fuel tube connector to the fuel pipe.
SST 09268–41047

CAUTION:

Perform connecting operations of the fuel tube connector (quick type) after observing the precautions.

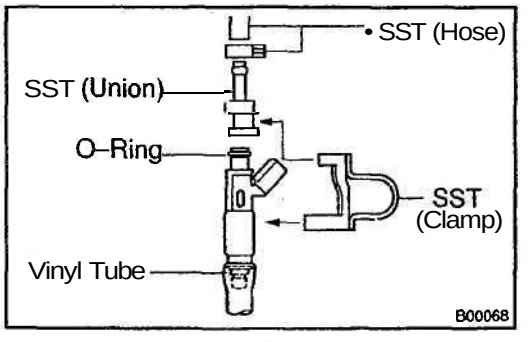

(c) Install the grommet and O–ring to the injector.
(d) Connect SST (union and hose) to the injector, and hold the injector to prevent gasoline from splashing out.
SST 09268–41047
(e) Put the injector into a graduated cylinder.

HINT:

Install a suitable vinyl tube onto the injector to prevent gasoline from splashing out.

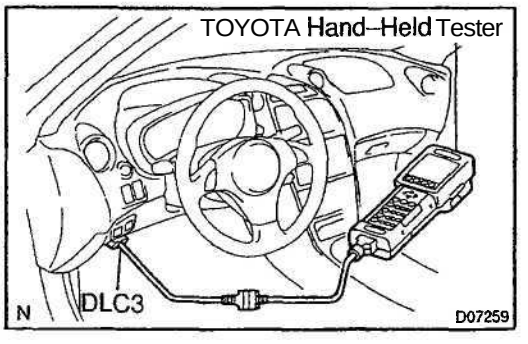

(fj Connect the TOYOTA hand–held tester to the DLC3.
(g) Turn the ignition switch ON and TOYOTA hand–held tester main switch ON.

NOTICE:

Do not start the engine.

(h) Select the active test mode on the TOYOTA hand–held tester.
(i) Please refer to the TOYOTA hand-held tester operator's manual for further details.

(j) If you have no TOYOTA hand–held tester, connect the positive (+) and negative (-) leads from the battery to the fuel pump connector (See page SF–18).

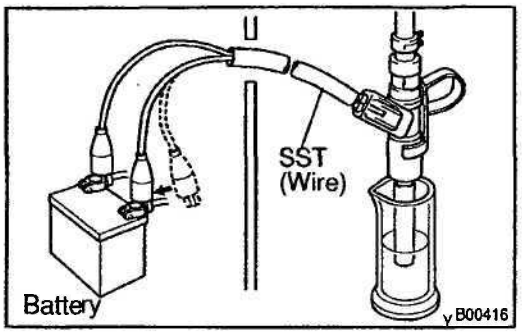

(k) Connect SST (wire) to the injector and battery for 15 seconds, and measure the injection volume with a graduated cylinder. Test each injector 2 or 3 times.
SST 09842-30080
Volume:
47 – 58 cm^3 (2.7 - 3.3 cu in.) per 15 sec.
Difference between each injector:
10 cm^3 (0.6 cu in.) or less
If the injection volume is not as specified, replace the injector.

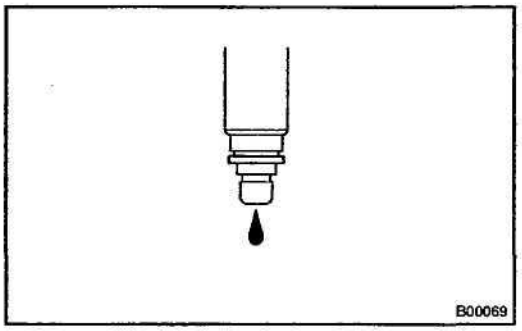

2. INSPECT LEAKAGE

(a) In the condition above, disconnect the test probes of SST (wire) from the battery and check the fuel leakage from the injector.
SST 09842-30080
Fuel drop:
1 drop or less per 12 minutes

(b) Turn the ignition switch to LOCK.

(c) Disconnect the negative (-) terminal cable from the battery.

(d) Remove the SST and fuel tube connector.
SST 09268–41047

CAUTION:

- **Perform disconnecting operations of the fuel tube connector (quick type) after observing the precautions.**
- **As there is retained pressure in the fuel pipe line, prevent it from splashing inside the engine compartment.**

(e) Disconnect the TOYOTA hand-held tester from the DLC3.

SF09L-04

INSTALLATION

1. INSTALL INJECTORS AND DELIVERY PIPES

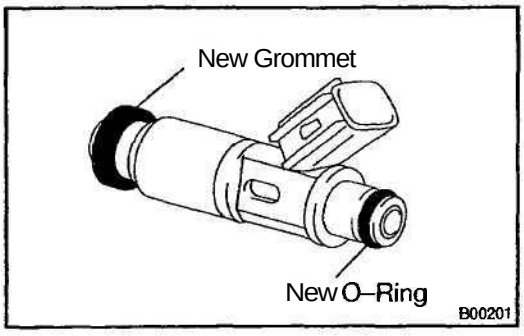

(a) Install the grommet to each injector.

(b) Apply a light coat of spindle oil or gasoline to new O–ring and install them to each injector.

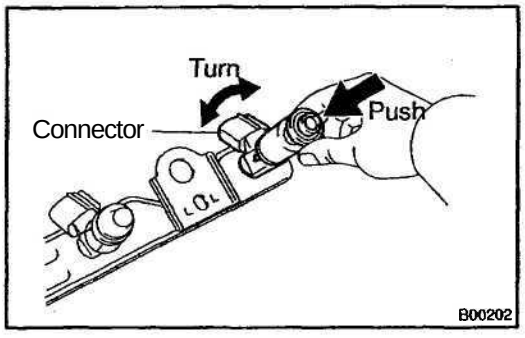

(c) Apply a light coat of spindle oil or gasoline on the place where a delivery pipe touches on O–ring.

(d) While turning the injector clockwise and counterclockwise, push it to the delivery pipes. Install the 4 injectors.

(e) Position the injector connector outward.

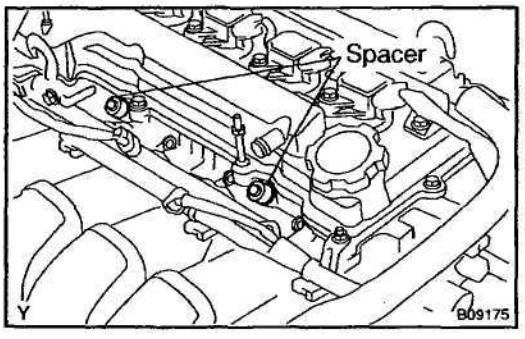

(f) Place the 2 spacers in position on the cylinder head.

(g) Apply a light coat of spindle oil or gasoline on the place where a cylinder head touches an O–ring of the injector.

(h) Place the delivery pipe and fuel pipe together with the 4 injectors in position on the cylinder head.

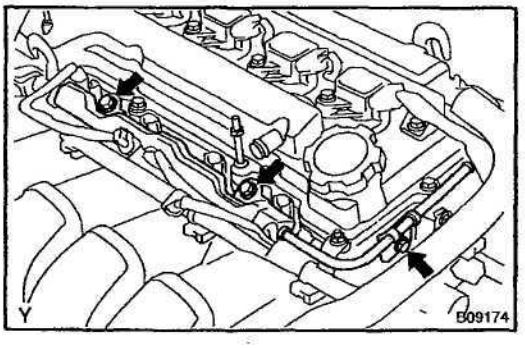

(i) Temporarily install the 2 bolts holding the delivery pipe to the cylinder head.

(j) Temporarily install the bolt holding the fuel pipe to the cylinder head.

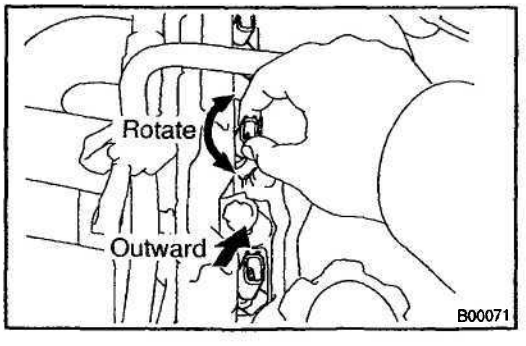

(k) Check that the injectors rotate smoothly.

HINT:

If injectors do not rotate smoothly, the probable cause is incorrect installation of O–ring. Replace the O–ring.

(l) Position the injector connector connector outward.

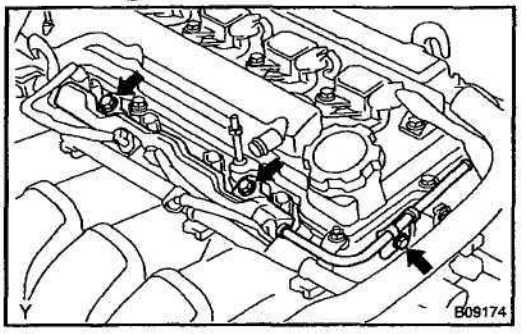

(m) Tighten the 2 bolts holding the delivery pipe to the cylinder head.
Torque:
1ZZ–FE: 19 N·m (190 kgf·cm, 14 ft·lbf)
2ZZ–GE: 29 N m (290 kgf·cm, 21 ft·lbf)

(n) Tighten the bolt holding the fuel pipe to the cylinder head.
Torque: 9 N·m (92 kgf·cm, 7 ft·lbf)

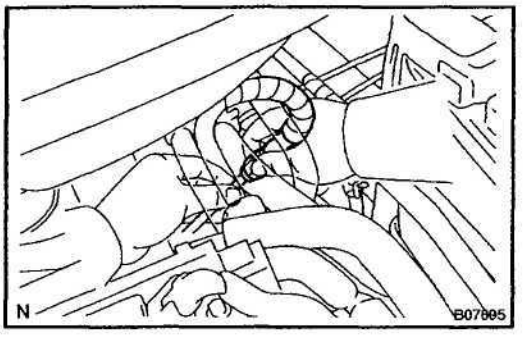

2. CONNECT FUEL TUBE

(a) Connect the fuel tube (fuel tube connector) to the fuel pipe.

CAUTION:

Perform connecting operations of the connector (quick type) after observing the precautions.

(b) Install the fuel pipe clamp.

3. INSTALL NO. 2 CYLINDER HEAD COVER

FUEL TANK AND LINE

PRECAUTION

SF09M-01

- **Always use new gaskets when replacing the fuel tank or component parts.**
- **Apply the proper torque to all parts tightened.**

SF03N-04

COMPONENTS

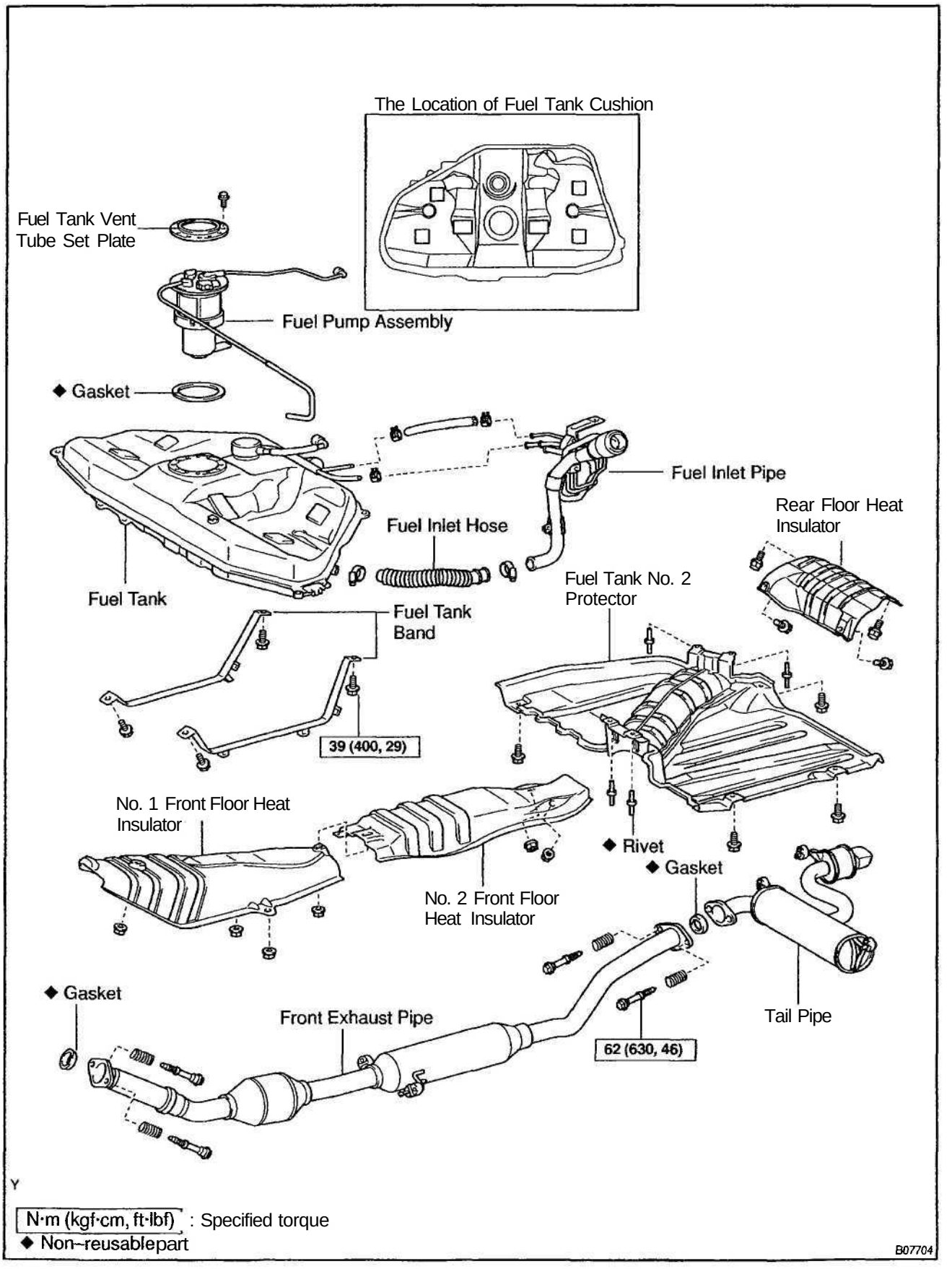

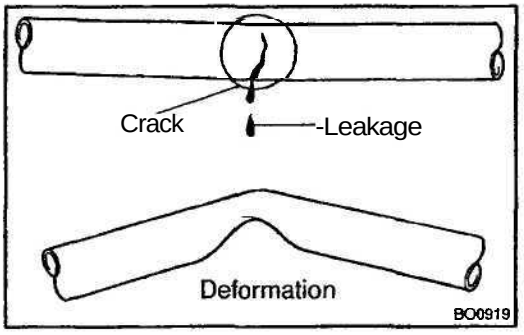

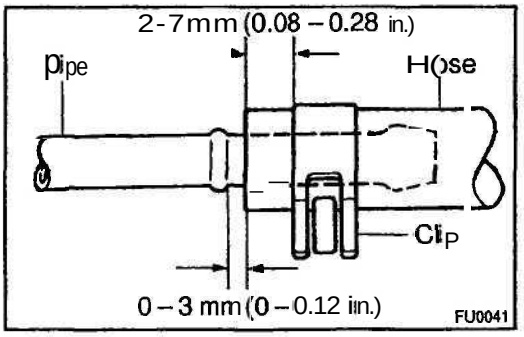

INSPECTION

INSPECT FUEL TANK AND LINE

(a) Check the fuel lines for cracks or leakage, and all connections for deformation.

(b) Check the fuel tank for deformation, cracks fuel leakage or tank band looseness.

(c) Check the filter neck for damage or fuel leakage.

(d) Hose and tube connections are as shown in the illustration.

If a problem is found, repair or replace the part as necessary.

MASS AIR FLOW (MAF) METER

COMPONENTS

SF07F-05

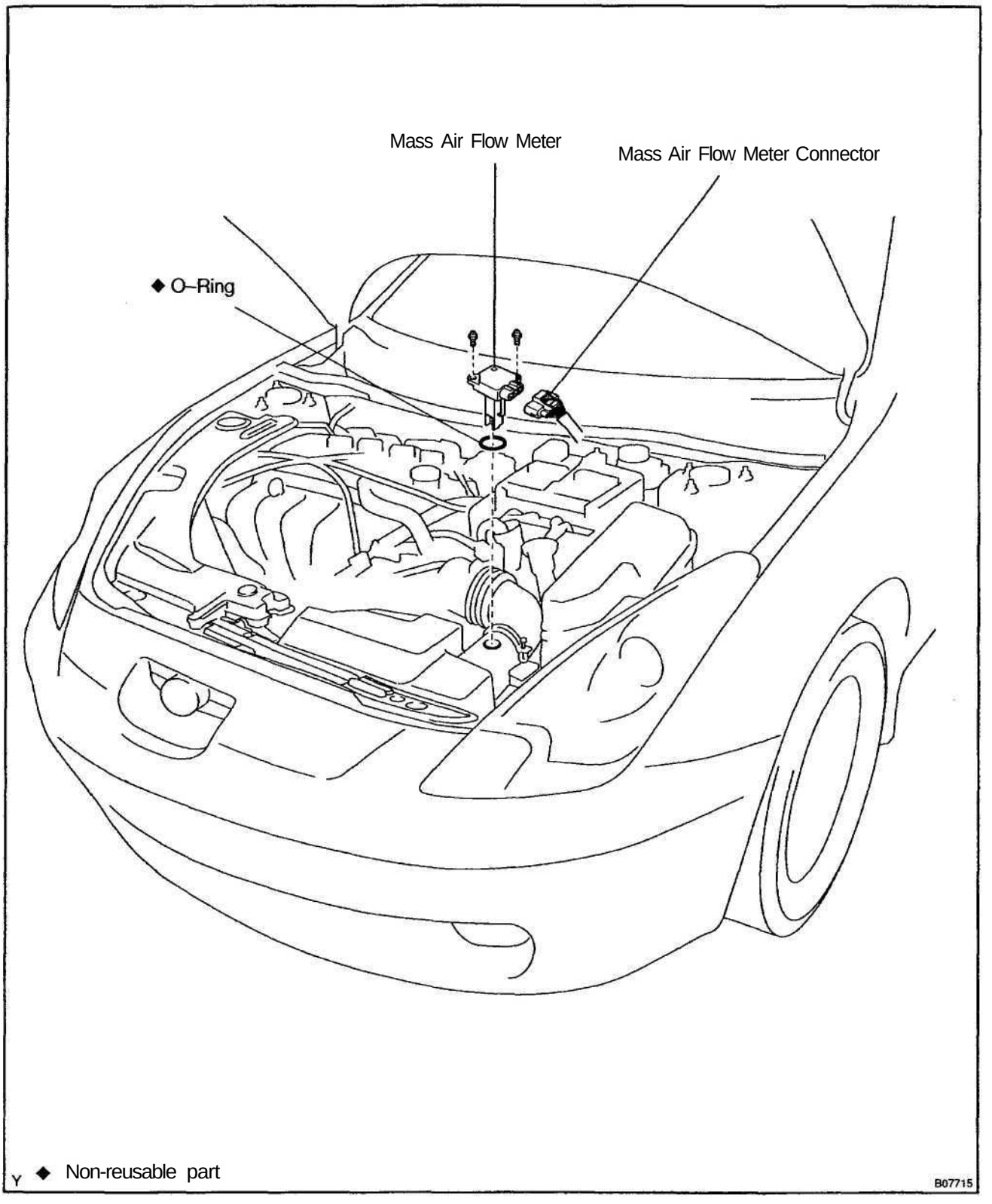

REMOVAL

REMOVE AIR FLOW METER

Remove the 2 screws, air flow meter and O–ring.

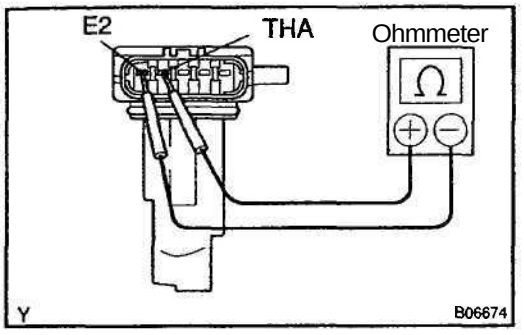

INSPECTION

1. INSPECT MAF METER RESISTANCE

Using an ohmmeter, measure the resistance between terminals THA and E2.

Resistance:

Terminals	Resistance	Temperature
THA – E2	13.6 – 18.4 kΩ	–20°C (–4°F)
THA – E2	2.21 – 2.69 kΩ	20°C (68°F)
THA – E2	0.49 – 0.67 kΩ	60°C (140°F)

If the resistance is not as specified, replace the MAF meter.

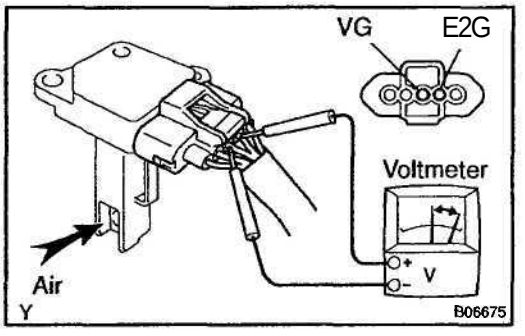

2. INSPECT MAF METER OPERATION

(a) Connect the MAF meter connector.
(b) Turn the ignition switch to ON.
(c) Using a voltmeter, connect the positive (+) tester probe to terminal VG, and negative (-) tester probe to terminal E2G.
(d) Blow air into the MAF meter, and check that the voltage fluctuates.

If operation is not as specified, replace the MAF meter.

(e) Turn the ignition switch LOCK.
(f) Disconnect the MAF meter connector.

INSTALLATION

INSTALL AIR FLOW METER

Install the air flow meter and a new O–ring with 2 screws.

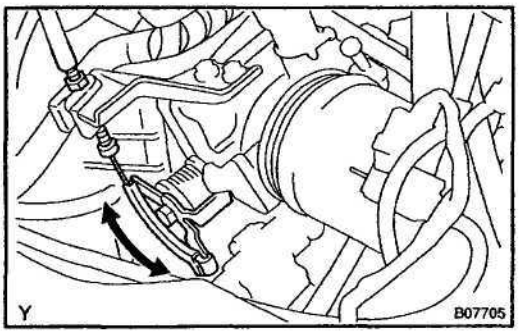

THROTTLE BODY
ON–VEHICLE INSPECTION

SF09P-05

1. INSPECT THROTTLE BODY

Check that the throttle linkage moves smoothly.

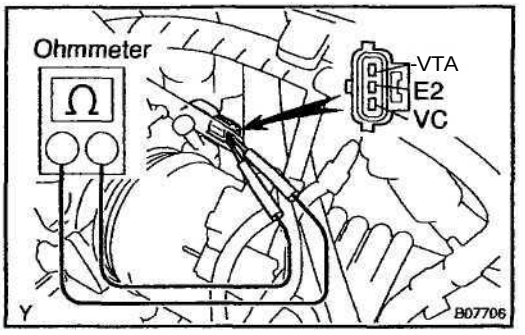

2. INSPECT THROTTLE POSITION SENSOR

(a) Remove the air cleaner assembly with air flow meter.
(b) Disconnect the throttle position sensor connector.
(c) Using an ohmmeter, measure the resistance between each terminal.

Clearance between lever and stop screw	Between terminals	Resistance
0 mm (0 in.)	VTA – E2	0.2 – 5.7 kΩ
Throttle valve fully open	VTA – E2	2.0 – 10.2 kΩ
–	VC – E2	2.5 – 5.9 kΩ

(d) Reconnect the throttle position sensor connector.
(e) Reinstall the air cleaner assembly with air flow meter.

SF168-01

COMPONENTS

1ZZ-FE:

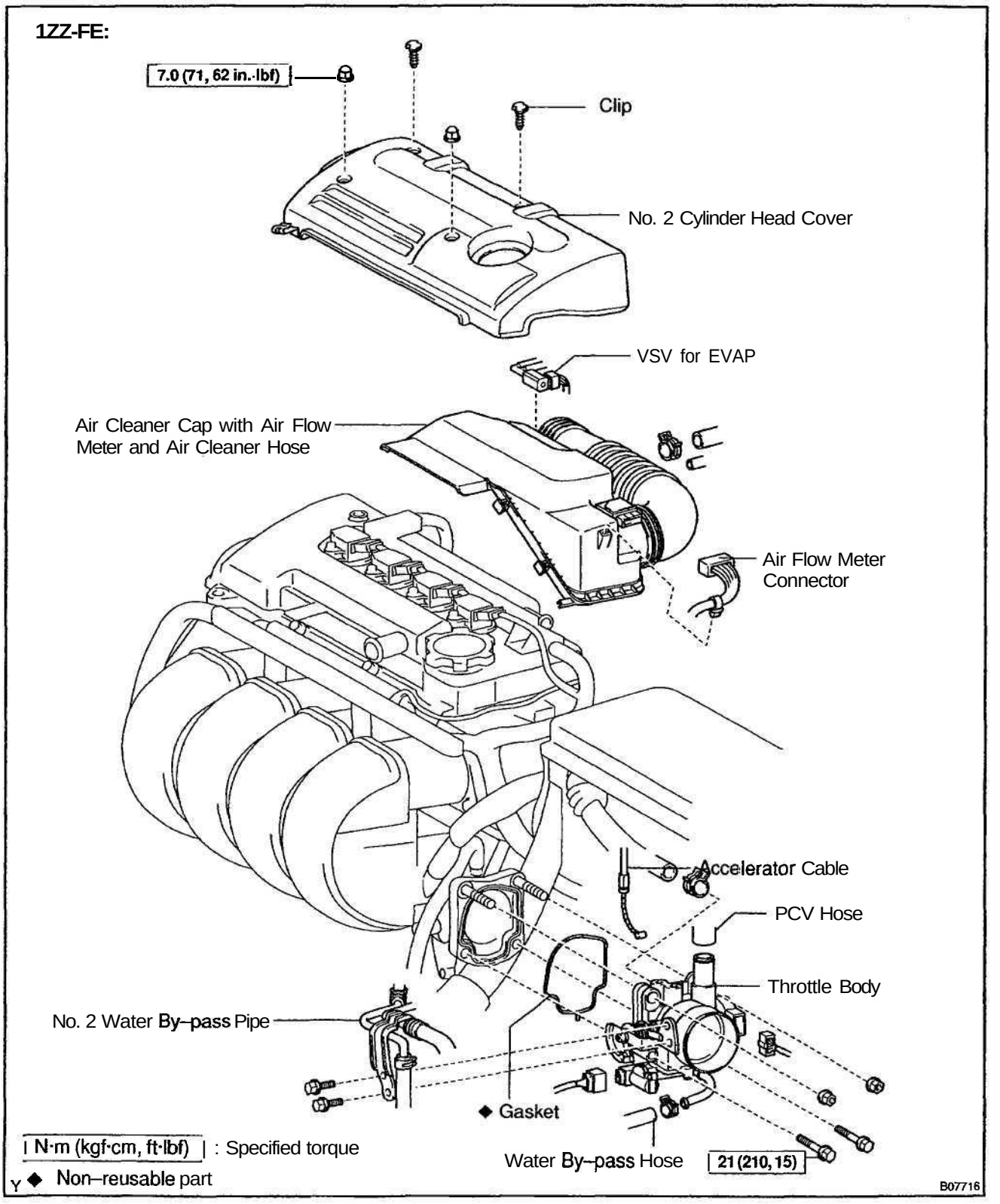

N·m (kgf·cm, ft·lbf) : Specified torque

◆ Non–reusable part

2ZZ-GE:

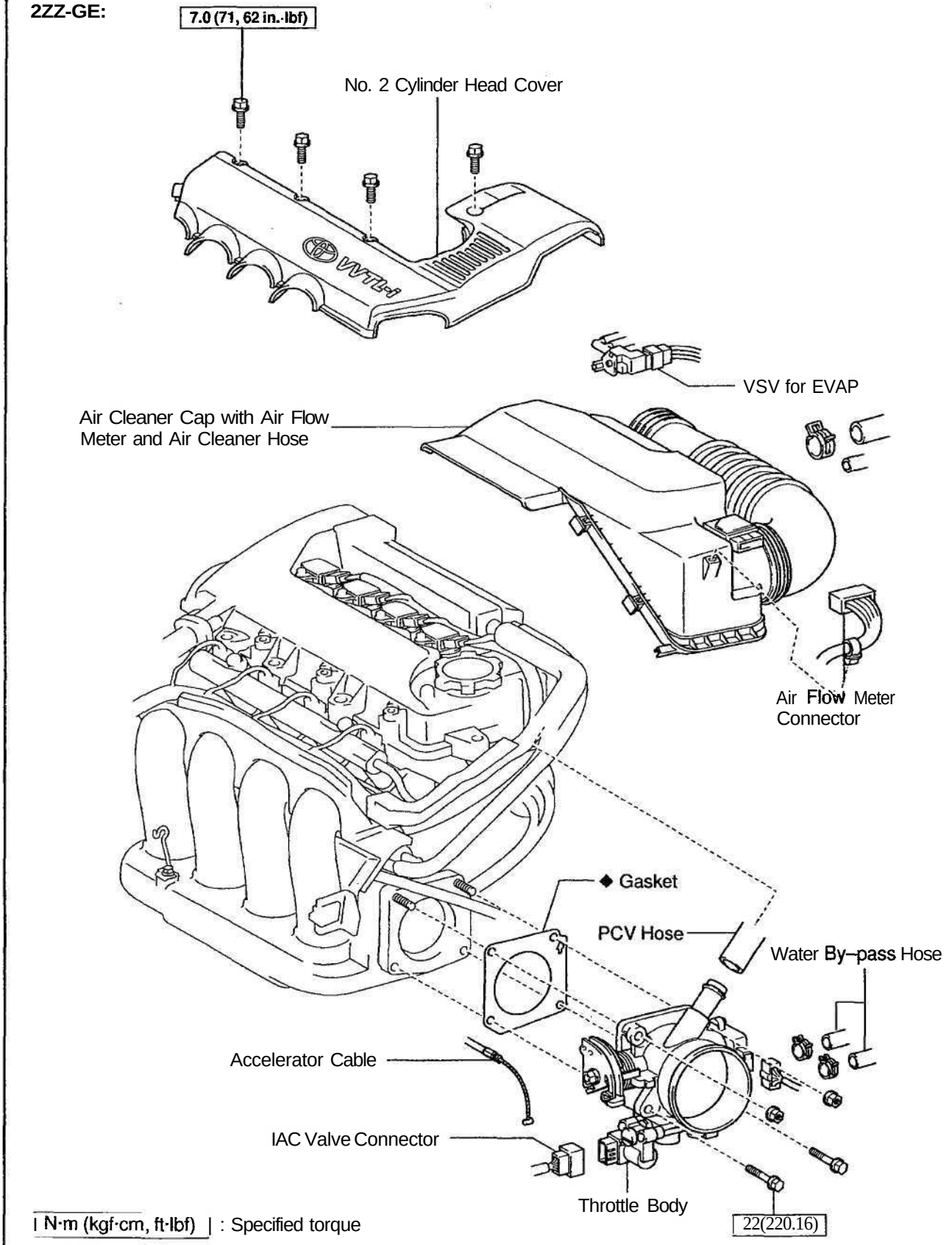
7.0 (71, 62 in.-lbf)
No. 2 Cylinder Head Cover
VSV for EVAP
Air Cleaner Cap with Air Flow Meter and Air Cleaner Hose
Air Flow Meter Connector
◆ Gasket
PCV Hose
Water By-pass Hose
Accelerator Cable
IAC Valve Connector
Throttle Body
22(220.16)
| N·m (kgf·cm, ft·lbf) | : Specified torque
◆ Non–reusable part
Y
B07717

SF03R-02

REMOVAL

1. DRAIN ENGINE COOLANT

2. DISCONNECT ACCELERATOR CABLE

3. REMOVE NO. 2 CYLINDER HEAD COVER

4. REMOVE AIR CLEANER HOSE AND CAP WITH MAF METER

(a) Disconnect the VSV for EVAP.

(b) Disconnect the 2 air hoses from air cleaner cap.

(c) Loosen the air cleaner hose clamp bolt.

(d) Disconnect the mass air flow meter connector.

(e) Disconnect the 3 air cleaner cap clips.

(f) Disconnect the air cleaner hose from the throttle body, and remove the air cleaner cap together with the air cleaner hose.

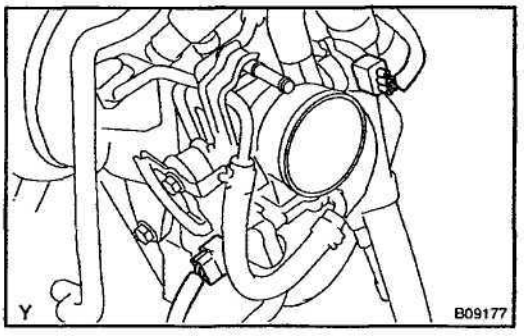

5. REMOVE THROTTLE BODY

(a) Disconnect the throttle position sensor connector.

(b) Disconnect the IAC valve connector.

(c) Disconnect the PCV hose from throttle body.

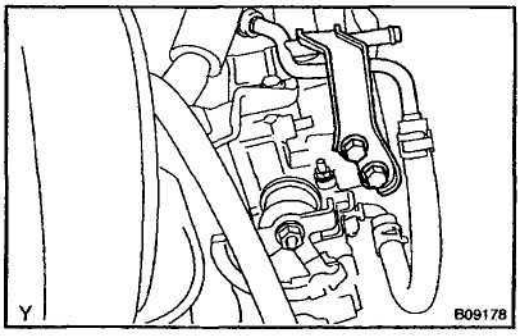

(d) 1ZZ-FE:

Remove the 2 bolts and disconnect the No. 2 water bypass pipe.

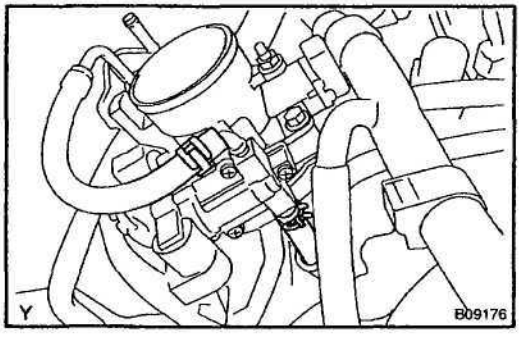

(e) Disconnect the 2 water bypass hoses.

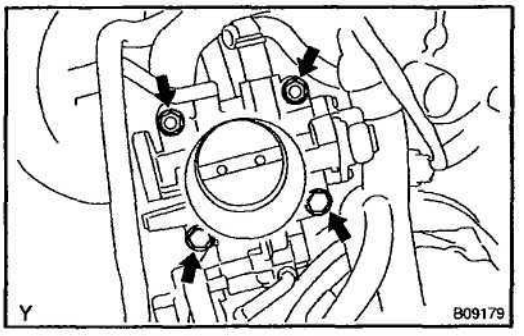

(f) Remove the 2 bolts, 2 nuts and throttle body from the intake manifold.

(g) Remove the throttle body gasket.

SF09S-05

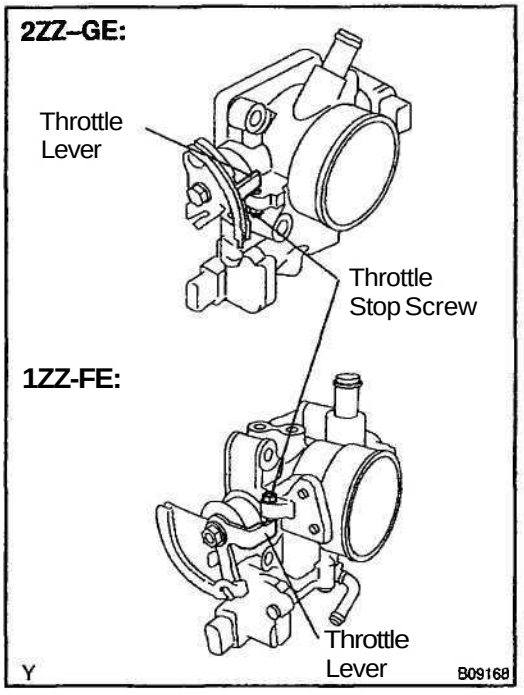

INSPECTION

1. INSPECT THROTTLE VALVE

Check that there is no clearance between the throttle stop screw and throttle lever when the closed throttle position.

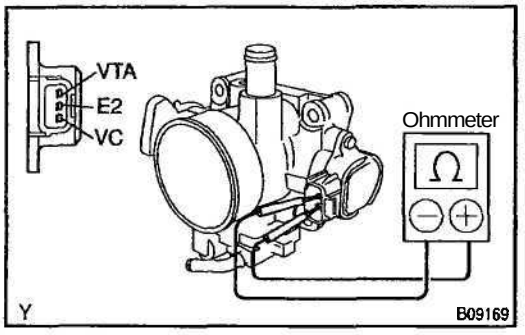

2. INSPECT THROTTLE POSITION SENSOR

Using an ohmmeter, measure the resistance between each terminal.

Clearance between lever and stop screw	Between terminals	Resistance
0 mm (0 in.)	VTA – E2	0.2 – 5.7 kΩ
Throttle valve fully open	VTA – E2	2.0 – 10.2 kΩ
–	VC – E2	2.5 – 5.9 kΩ

SF169-01

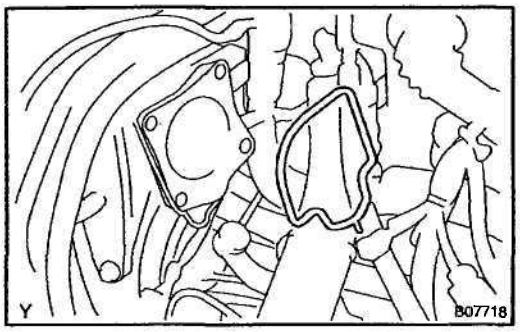

INSTALLATION

1. INSTALL THROTTLE BODY

(a) 1ZZ-FE:
Install a new gasket on the intake manifold, as shown in the illustration.

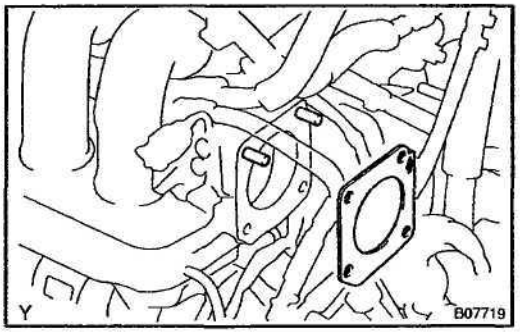

(b) 2ZZ–GE:
Install a new gasket on the intake manifold, as shown in the illustration.

(c) Install the throttle body with the 2 bolts and 2 nuts.
Torque:
1ZZ–FE: 21 N·m (210 kgf·cm, 15 ft·lbf)
2ZZ–GE: 22 N·m (220 kgf·cm, 16 ft·lbf)

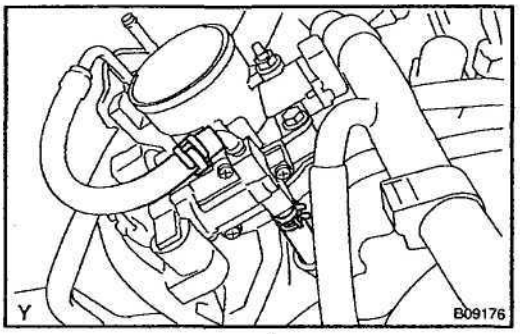

(d) Connect the 2 water bypass hoses to the throttle body.

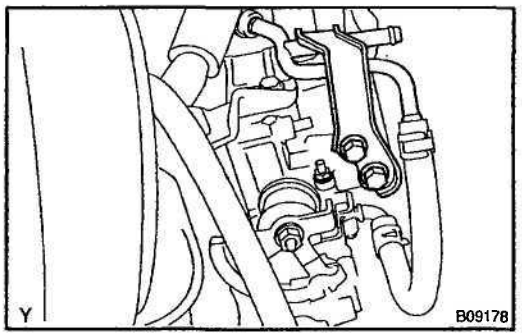

(e) 1ZZ-FE:
Install the No. 2 water by–pass pipe with the 2 bolts.

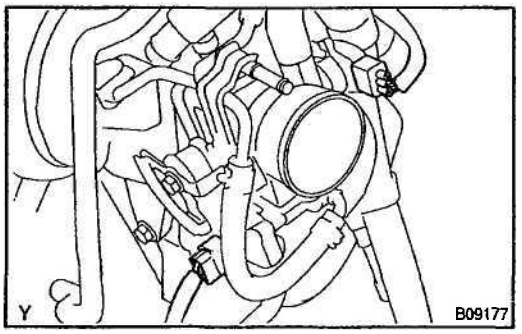

(f) Connect the IAC valve connector.
(g) Connect the throttle position sensor connector.
(h) Connect the PCV hose to throttle body.

2. INSTALL AIR CLEANER HOSE AND CAP WITH MAF METER

3. INSTALL NO. 2 CYLINDER HEAD COVER

4. FILL RADIATOR WITH ENGINE COOLANT

IDLE AIR CONTROL (IAC) VALVE

SF09U-03

ON–VEHICLE INSPECTION

INSPECT IAC VALVE OPERATION

(a) Initial conditions:
- Engine at normal operating temperature
- Idle speed set correctly
- Transmission in neutral
- A/C switch OFF

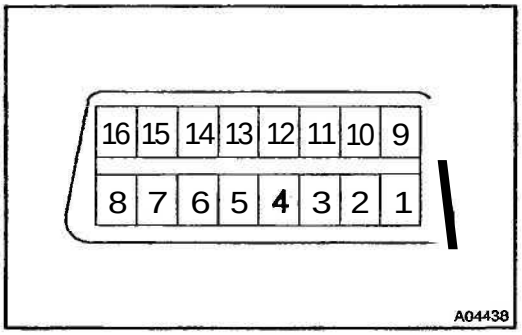

(b) Using SST, connect terminals TC and CG of the DLC3.
SST 09843–18020

(c) After engine speed are kept at 900 – 1,300 rpm for 5 seconds, check that they return to idle speed.

If the rpm operation is not as specified, check the IAC valve, wiring and ECM.

(d) Remove the SST from the DLC3.
SST 09843–18020

SF15U-01

COMPONENTS

1ZZ-FE:

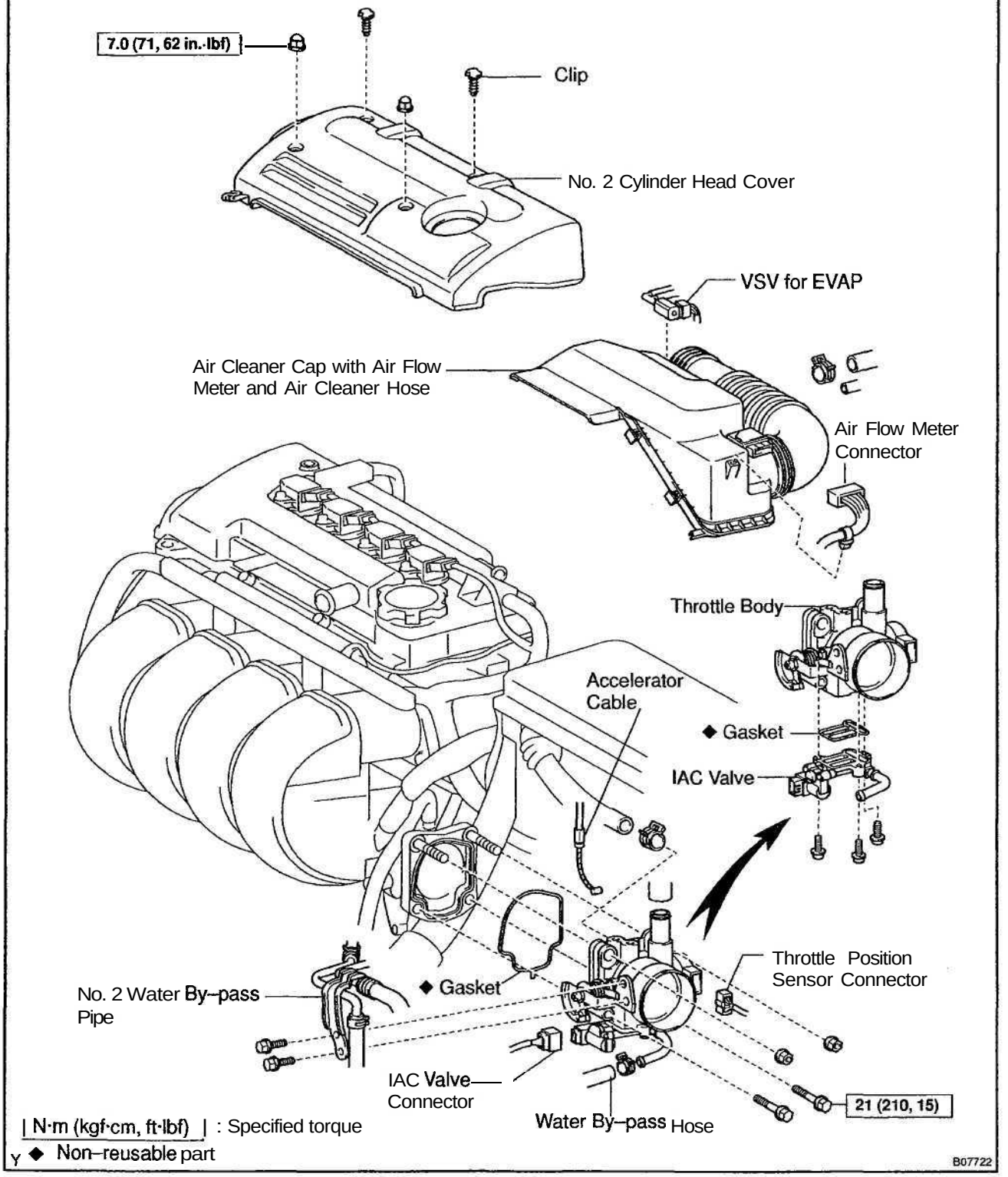

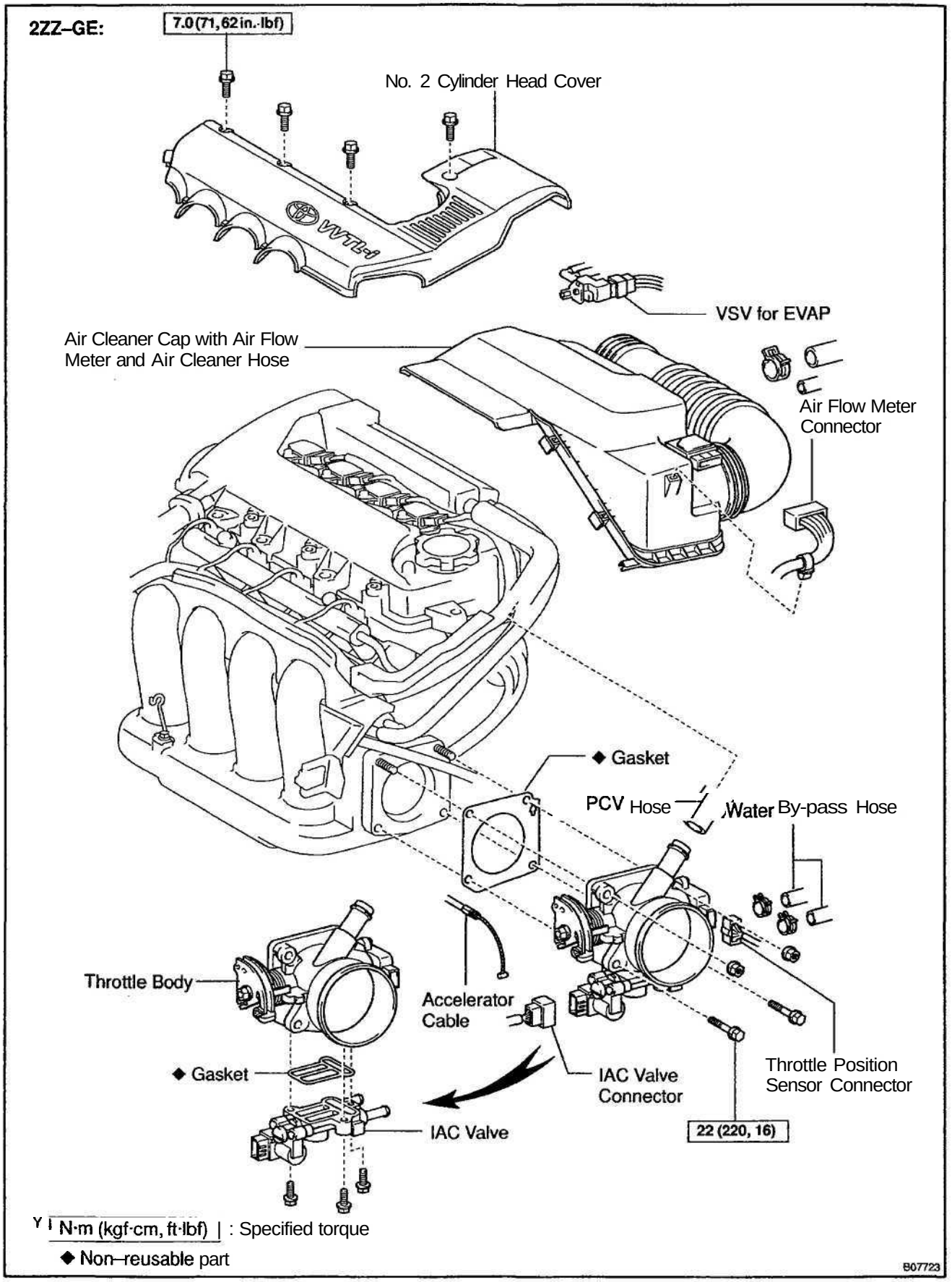
2ZZ–GE:
7.0 (71, 62 in.-lbf)
No. 2 Cylinder Head Cover
VSV for EVAP
Air Cleaner Cap with Air Flow Meter and Air Cleaner Hose
Air Flow Meter Connector
◆ Gasket
PCV Hose
Water By-pass Hose
Throttle Body
Accelerator Cable
◆ Gasket
IAC Valve Connector
Throttle Position Sensor Connector
IAC Valve
22 (220, 16)
Y | N·m (kgf·cm, ft·lbf) | : Specified torque
◆ Non–reusable part
B07723

SF09W-04

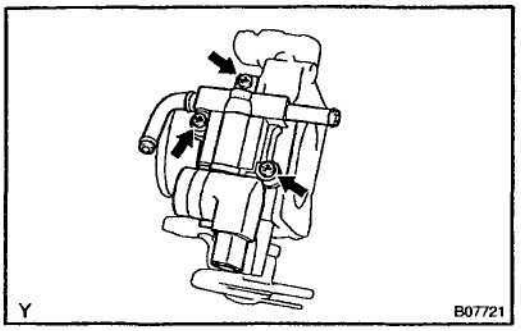

REMOVAL

1. REMOVE THROTTLE BODY
(See page SF–36)

2. REMOVE IAC VALVE

Remove the 4 screws, IAC valve and gasket.

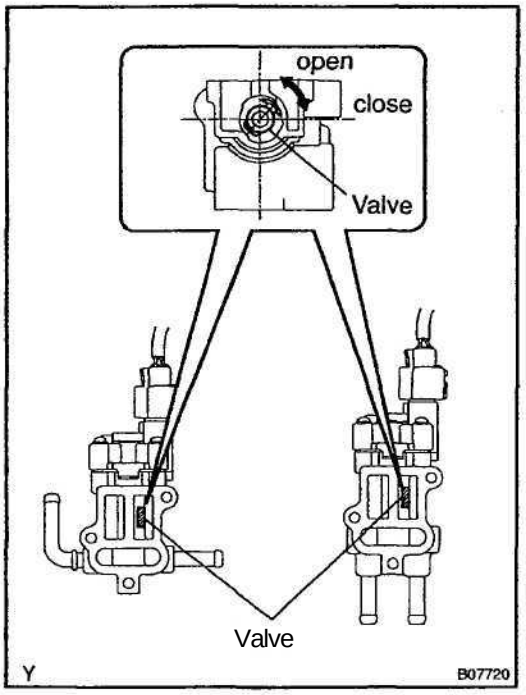

SF09X-04

INSPECTION

INSPECT IAC VALVE OPERATION

(a) Check that the IAC valve is half opened.
(b) Connect the IAC valve connector to the IAC valve.
(c) Disconnect the ECT sensor connector from the ECT sensor.
(d) Turn the ignition switch ON.
(e) Check that the IAC valve moves.

HINT:

Repeat connecting and disconnecting of IAC valve connector several times and check the operation of the valve.

If operation is not as specified, replace the IAC valve.

(f) Turn the ignition switch OFF.
(g) Connect the ECT sensor connector to the ECT sensor.
(h) Disconnect the IAC valve connector from the IAC valve.

INSTALLATION

Installation is in reverse order of removal (See page SF–43).

HINT:

Install the IAC valve with a new gasket.

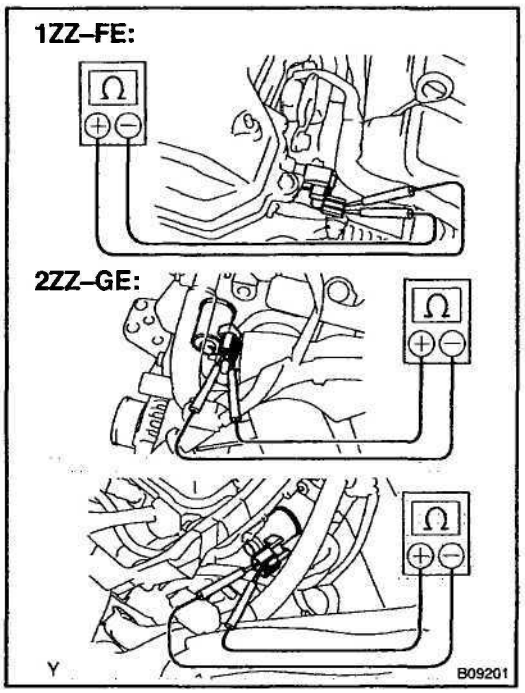

CAMSHAFT TIMING OIL CONTROL VALVE

ON–VEHICLE INSPECTION

SFOSL–06

INSPECT OIL CONTROL VALVE RESISTANCE

(a) Remove the No. 2 cylinder head cover.

(b) 2ZZ–GE:
Disconnect the 2 PCV hoses.

(c) Disconnect the oil control valve connector.

(d) Using an ohmmeter, measure the resistance between the terminals.
Resistance: 6.9 - 7.9 Ω at 20°C (68°F)

If the resistance is not as specified, replace the valve.

(e) Reconnect the oil control valve connector.

(f) Reinstall the V–bank cover.

SF15V-01

COMPONENTS

1ZZ-FE:

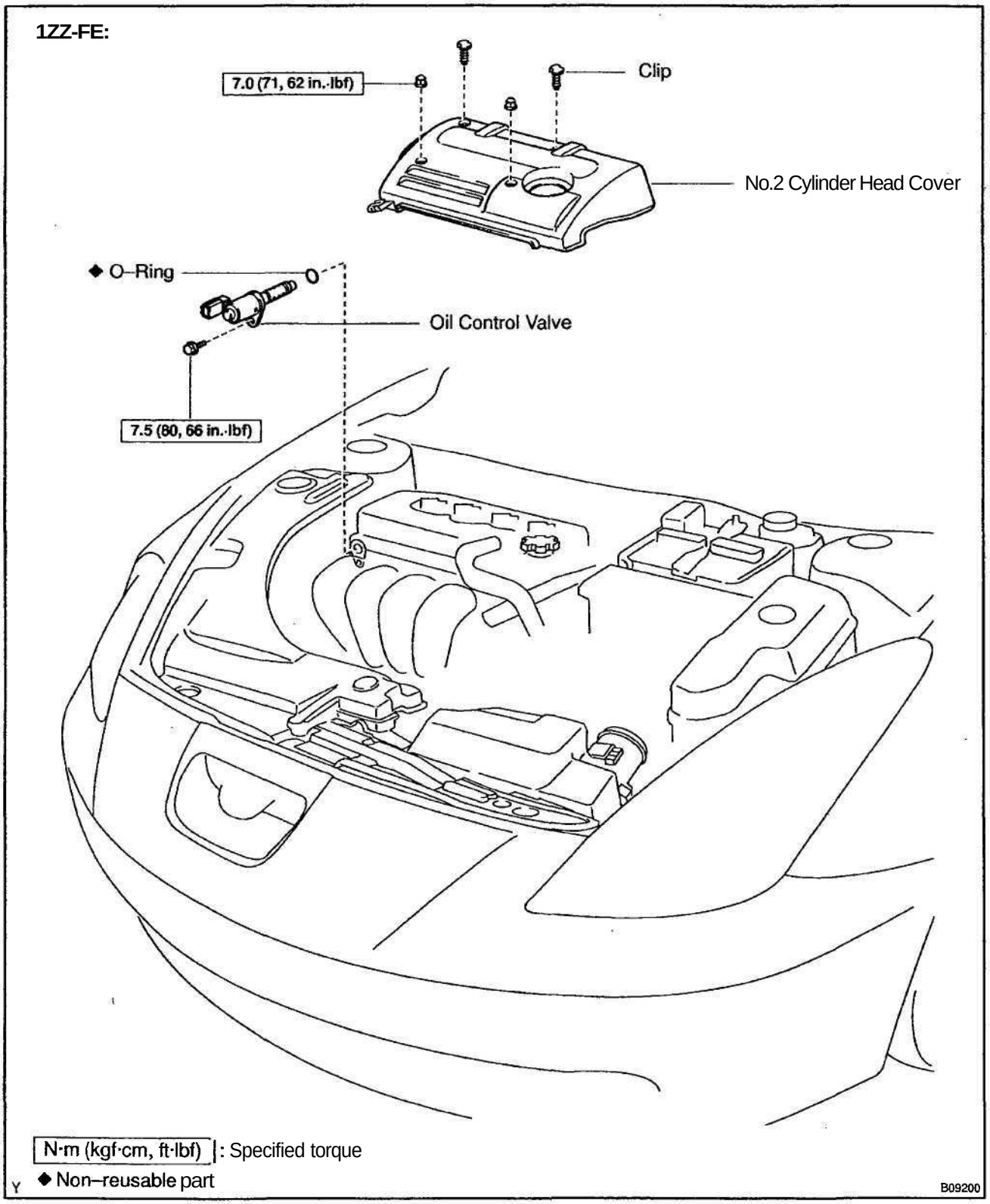

N·m (kgf·cm, ft·lbf) : Specified torque

◆ Non–reusable part

B09200

2ZZ–GE:

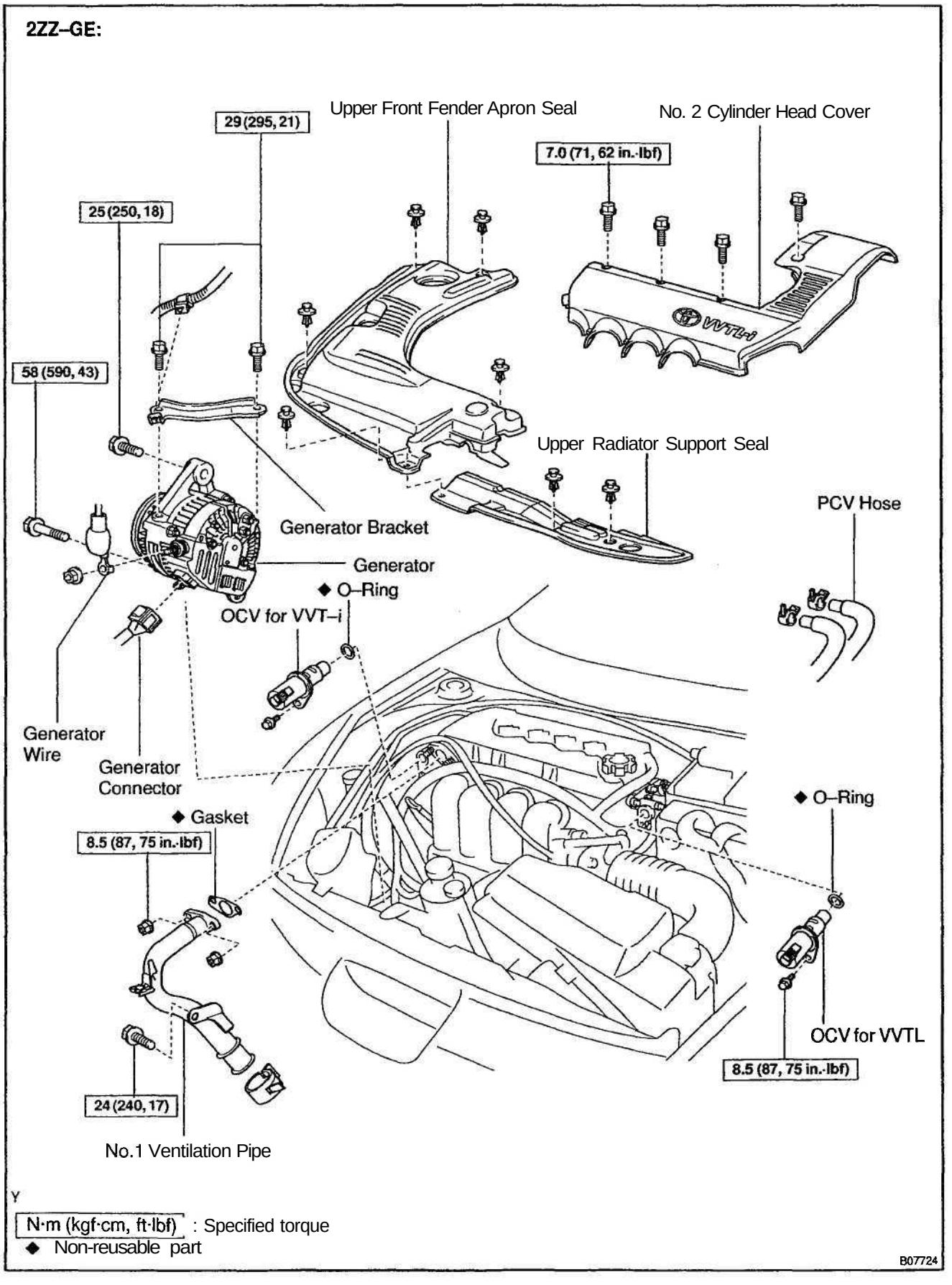

Y

N·m (kgf·cm, ft·lbf) : Specified torque

◆ Non-reusable part

B07724

SF0ZY-02

REMOVAL

1. REMOVE NO. 2 CYLINDER HEAD COVER

2. 2ZZ–GE:
DISCONNECT 2 PCV HOSES, UPPER FRONT FENDER APRONSEAL AND UPPER RAKIATOR SUPPORT SEAL

3. 2ZZ–GE:
REMOVE GENERATOR (See page CH–7)

4. 2ZZ–GE:
REMOVE NO. 1 VENTILATION PIPE

(a) Remove the 2 nuts, bolt and gasket.

HINT:

At the time of installation, please refer to the following items.

Use a new gasket.

(b) reomve the hose clamp and disconnect No.1 ventilation pipe.

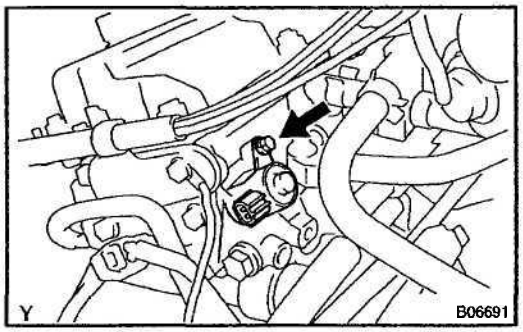

5. **1ZZ–FE:**
REMOVE CAMSHAFT TIMING OIL CONTROL VALVE

(a) Disconnect the oil control valve connector.

(b) Remove the bolt and oil control valve.
Torque: 7.5 N·m (80 kgf·cm, 66 in.·lbf)

(c) Remove the O–ring from the oil control valve.

HINT:

At the time of installation, please refer to the following items.

Use a new O–ring.

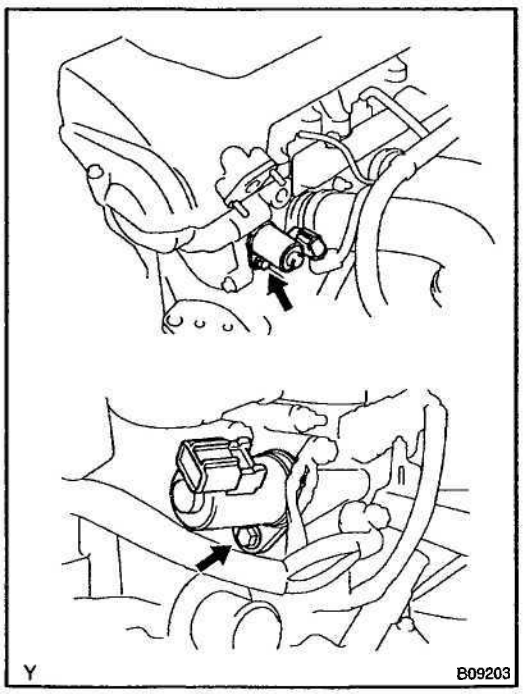

6. 2ZZ–GE:
REMOVE 2 CAMSHAFT TIMING OIL CONTROL VALVES

(a) Disconnect the oil control valve connector.

(b) Remove the 2 bolts and oil control valves.
Torque: 8.5 N·m (87 kgf·cm, 75 in.·lbf)

(c) Remove the O–ring from the each oil control valve.

HINT:

At the time of installation, please refer to the following items.

Use a new O–ring.

SF0SO-06

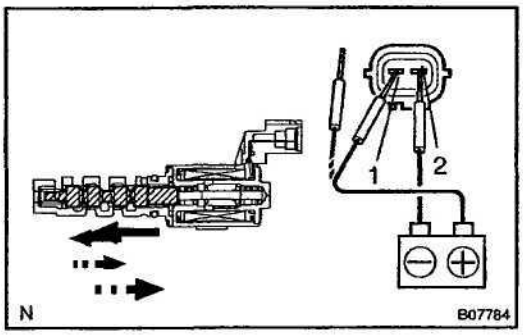

INSPECTION

INSPECT CAMSHAFT OIL CONTROL VALVE OPERATION

Connect the positive (+) lead from the battery to terminal 1 and negative (-) lead to terminal 2, and check the movement of the valve.

Battery positive voltage is applied	Valve moves in ← direction
Battery positive voltage is cut off	Valve moves in • • → direction

If operation is not as specified, replace the valve.

INSTALLATION

Installation is in the reverse order of removal. (See page SF–49)

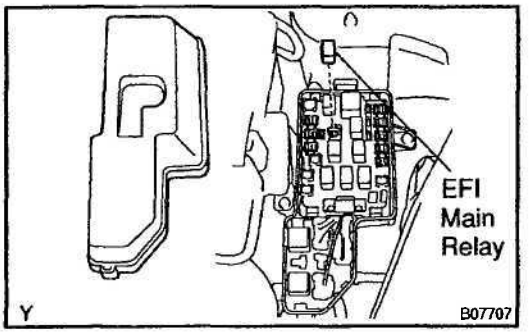

EFI MAIN RELAY

INSPECTION

SF05Z-04

1. REMOVE EFI MAIN RELAY (Marking: EFI)

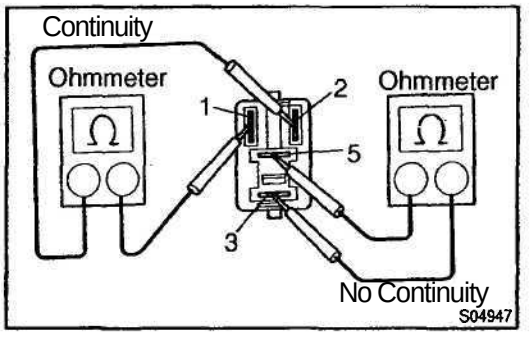

2. INSPECT EFI MAIN RELAY CONTINUITY

(a) Using an ohmmeter, check that there is continuity between terminals 1 and 2.

If there is no continuity, replace the relay.

(b) Check that there is no continuity between terminals 3 and 5.

If there is continuity, replace the relay.

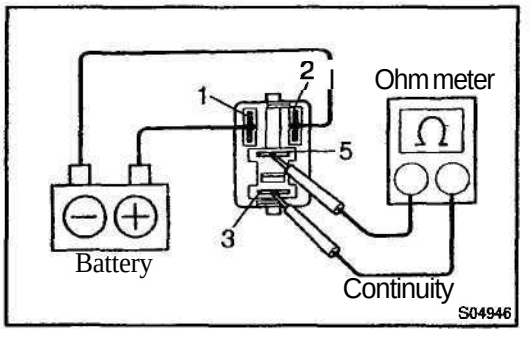

3. INSPECT EFI MAIN RELAY OPERATION

(a) Apply battery voltage across terminals 1 and 2.

(b) Using an ohmmeter, check that there is continuity between terminals 3 and 5.

If there is no continuity, replace the relay.

4. REINSTALL EFI MAIN RELAY

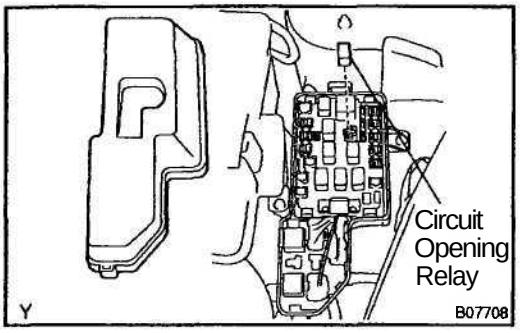

CIRCUIT OPENING RELAY INSPECTION

SF0A0-04

1. REMOVE CIRCUIT OPENING RELAY

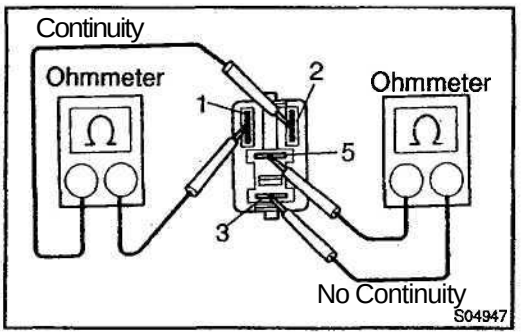

2. INSPECT CIRCUIT OPENING RELAY CONTINUITY

(a) Using an ohmmeter, check that there is continuity between terminals 1 and 2.

If there is no continuity, replace the relay.

(b) Check that there is no continuity between terminals 3 and 5.

If there is continuity, replace the relay.

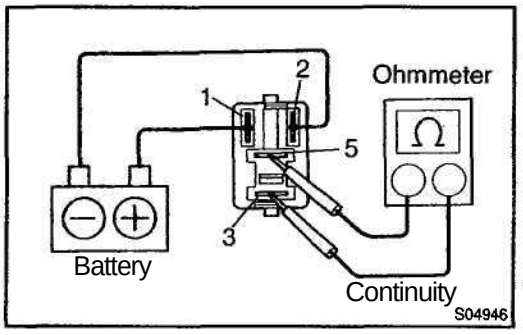

3. INSPECT CIRCUIT OPENING RELAY OPERATION

(a) Apply battery voltage across terminals 1 and 2.

(b) Using an ohmmeter, check that there is continuity between terminals 3 and 5.

If there is no continuity, replace the relay.

4. REINSTALL CIRCUIT OPENING RELAY

VSV FOR INTAKE AIR CONTROL VALVE

COMPONENTS

SF0Y8-05

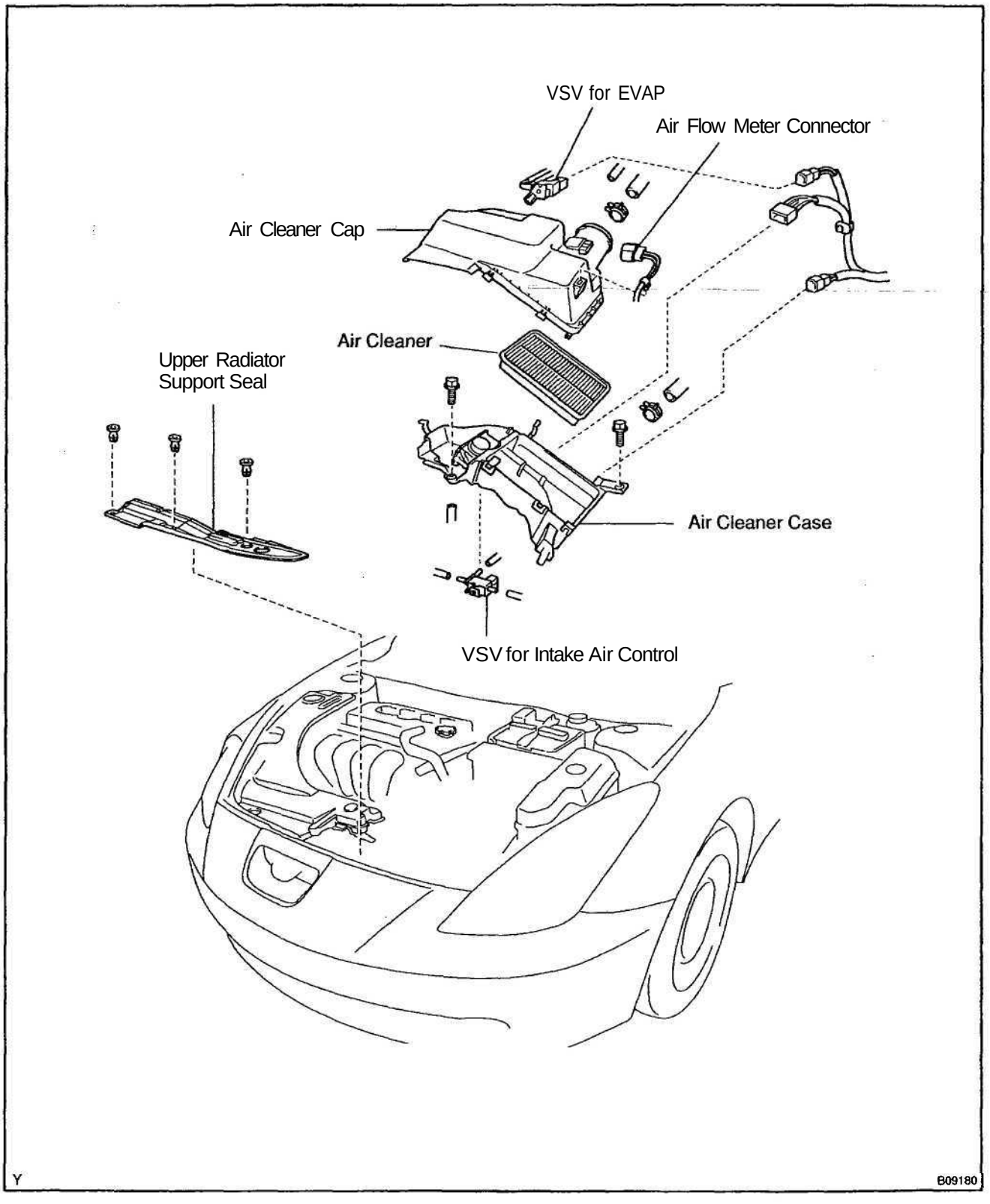

SF0PM-06

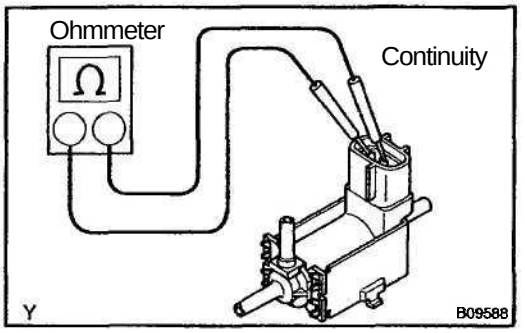

INSPECTION

INSPECT VSV

(a) Inspect the VSV for open circuit.

Using an ohmmeter, check that there is no continuity between the terminals.

Resistance: 37 – 44 Ω at 20°C (68°F)

If there is no continuity, replace the VSV.

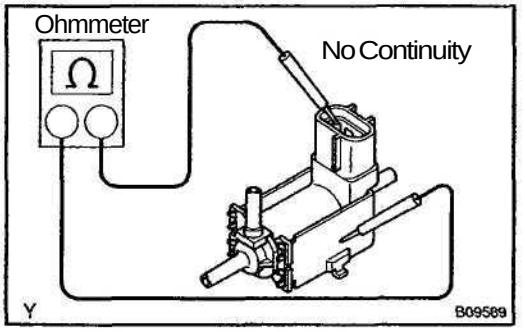

(b) Inspect the VSV for ground.

Using an ohmmeter, check that there is no continuity between each terminal and the body.

If there is continuity, replace the VSV.

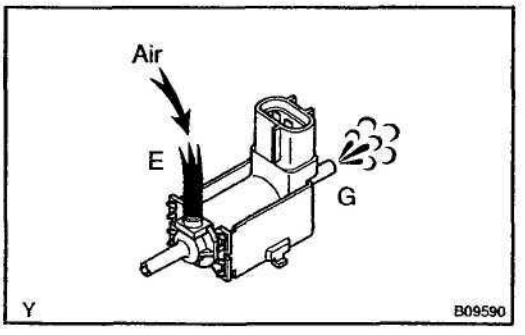

(c) Inspect the VSV operation.

(1) Check that air flows from ports E to G.

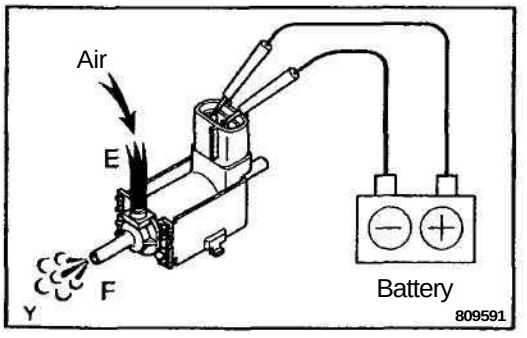

(2) Apply battery positive voltage across the terminals.

(3) Check that air flows from ports E to F.

If operation is not as specified, replace the VSV.

VSV FOR EVAPORATIVE EMISSION (EVAP)

COMPONENTS

SF15W-01

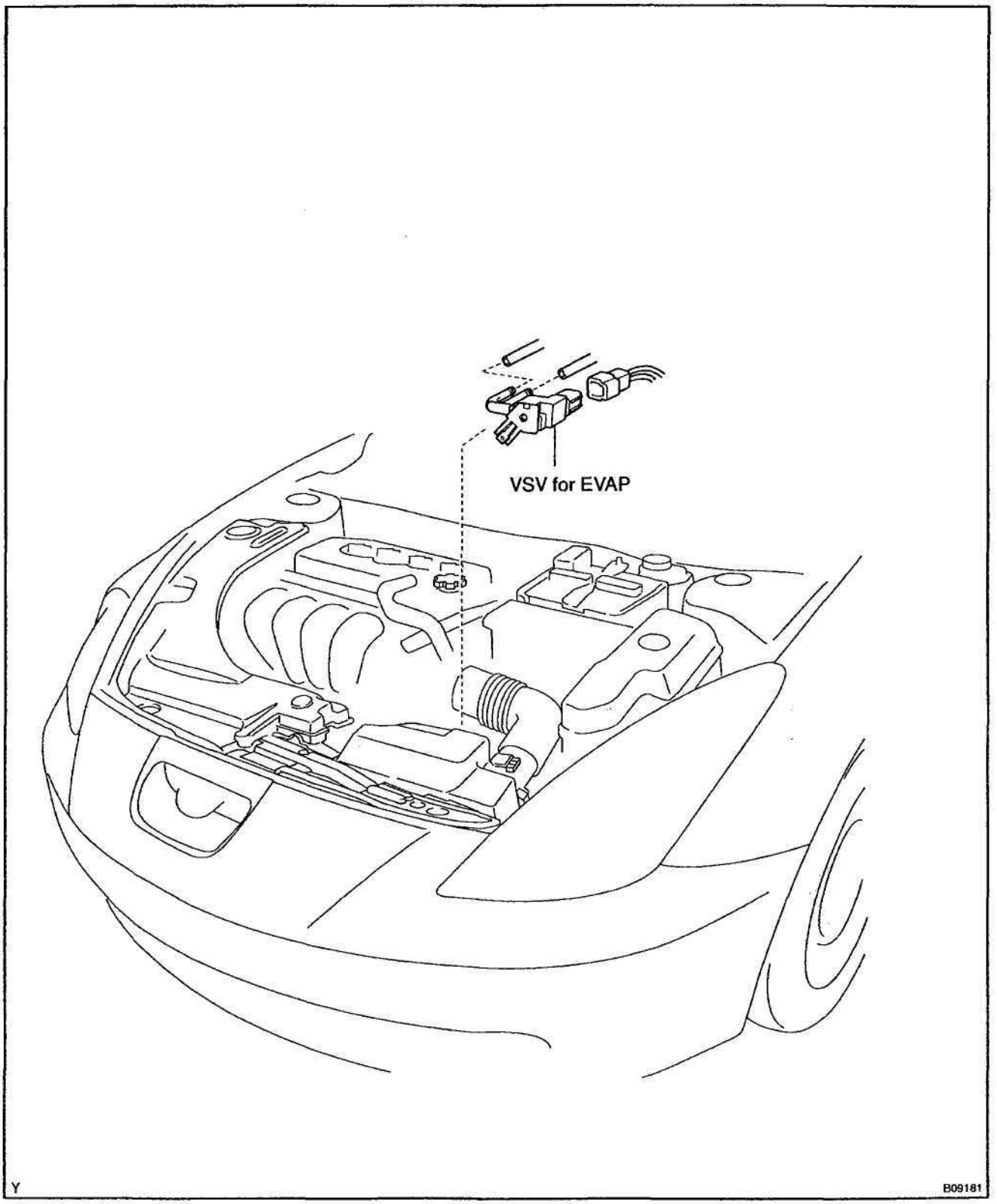

INSPECTION

1. REMOVE VSV

(a) Disconnect the 2 EVAP hoses from the VSV.
(b) Disconnect the VSV connector.
(c) Remove the bolt and VSV.

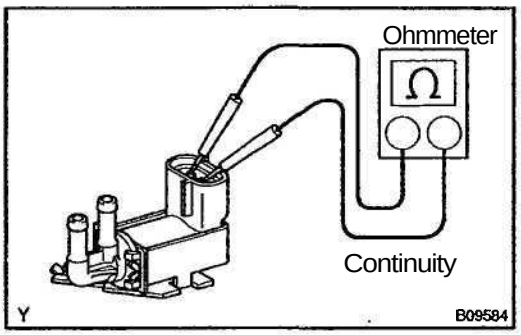

2. INSPECT VSV FOR OPEN CIRCUIT

Using an ohmmeter, check that there is continuity between the terminals.

Resistance: 27 - 33 Ω at 20°C (68°F)

If there is no continuity, replace the VSV.

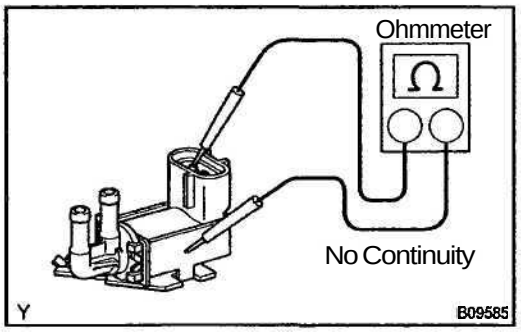

3. INSPECT VSV FOR GROUND

Using an ohmmeter, check that there is no continuity between each terminal and the body.

If there is continuity, replace the VSV.

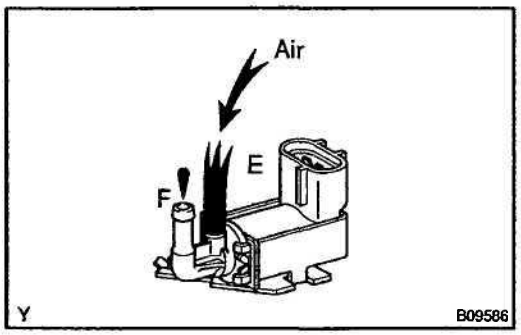

4. INSPECT VSV OPERATION

(a) Check that air flows with difficulty from port E to port F.

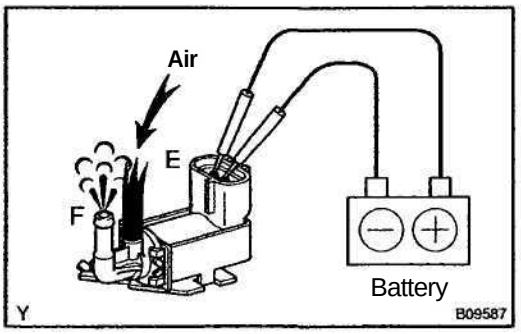

(b) Apply battery voltage across the terminals.
(c) Check that air flows from port E to port F.

If operation is not as specified, replace the VSV.

5. REINSTALL VSV

(a) Install the VSV with the bolt.
(b) Connect the VSV with the bolt.
(c) Connect the 2 EVAP hoses to the VSV.

VSV FOR CANISTER CLOSED VALVE (CCV)

COMPONENTS

SF1SY-01

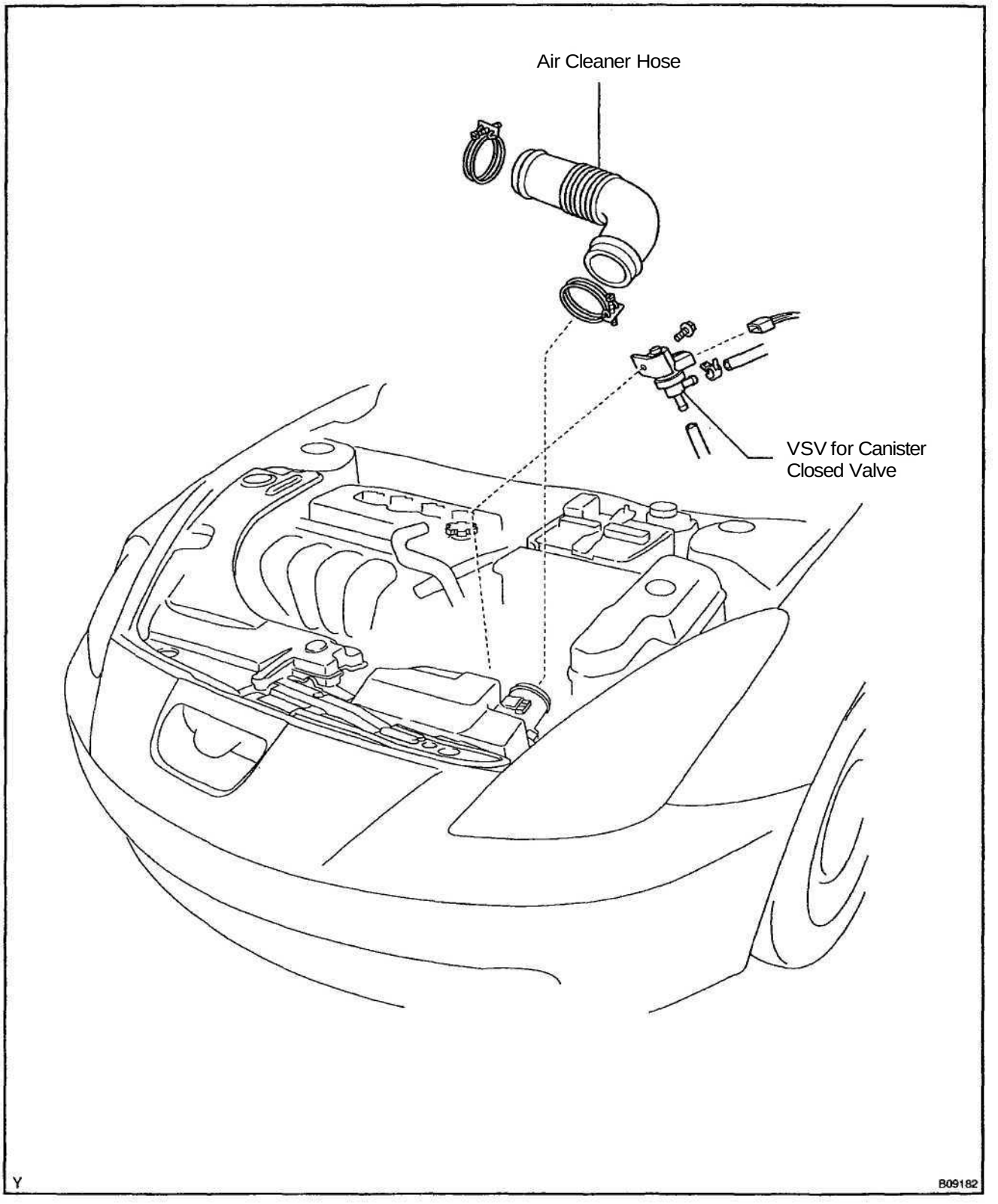

INSPECTION

1. REMOVE VSV

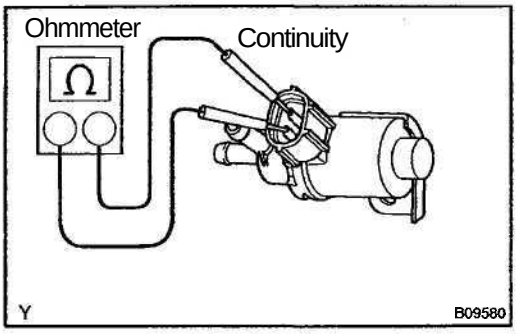

2. INSPECT VSV FOR OPEN CIRCUIT

Using an ohmmeter, check that there is continuity between the terminals.

Resistance:

At 20 °C (68 °F)	24 – 30Ω

If there is no continuity, replace the VSV.

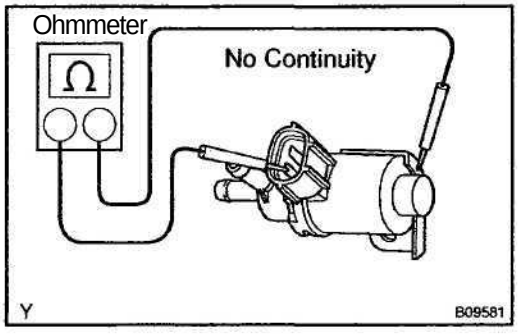

3. INSPECT VSV FOR GROUND

Using an ohmmeter, check that there is no continuity between each terminal and the body.

If there is no continuity, replace the VSV.

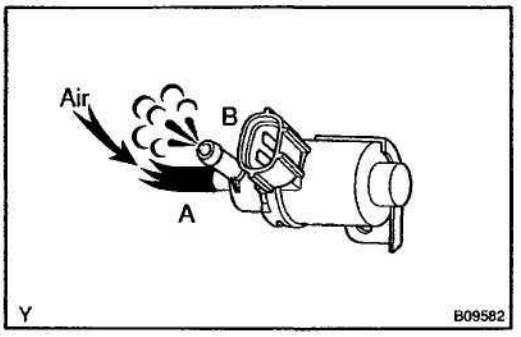

4. INSPECT VSV OPERATION

(a) Check that air flows from ports A to B.

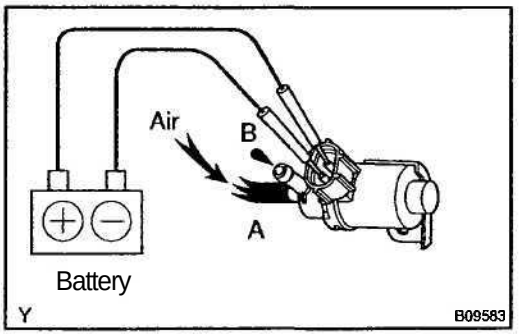

(b) Apply battery positive voltage across the terminals.

(c) Check that air does not flow from ports A to B.

If operation is not as specified, replace the VSV.

5. REINSTALL VSV

VSV FOR PRESSURE SWITCHING VALVE

SF160-01

COMPONENTS

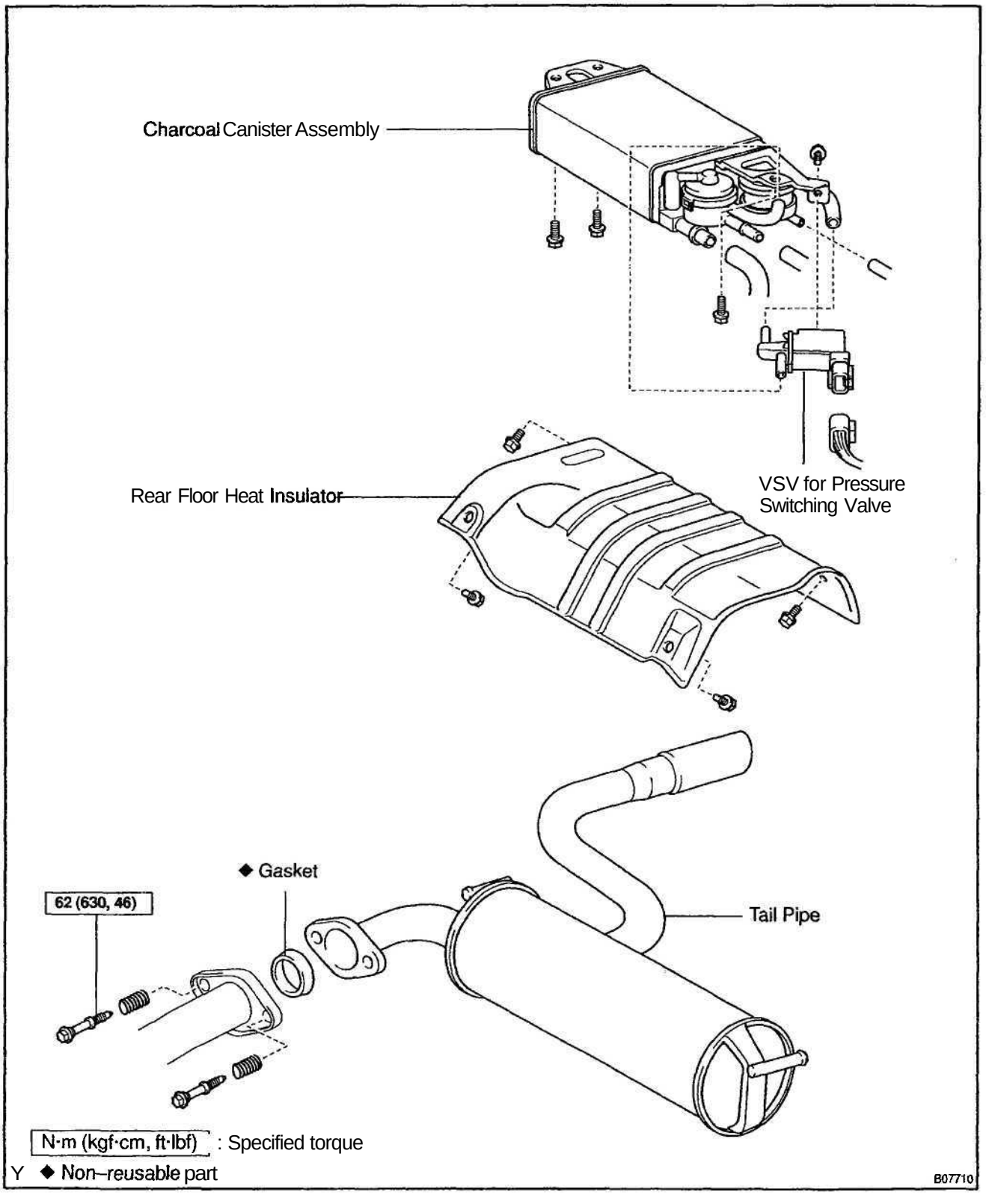

INSPECTION

1. REMOVE VSV

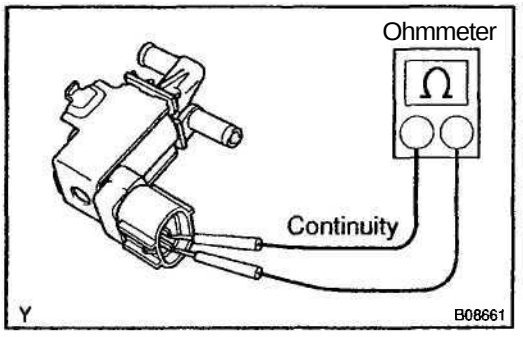

2. INSPECT VSV FOR OPEN CIRCUIT

Using an ohmmeter, check that there is continuity between the terminals.

Resistance:

At 20 °C (68 °F)	37 – 44 Ω
At 120 °C (248 °F)	51 – 62 Ω

If there is no continuity, replace the VSV.

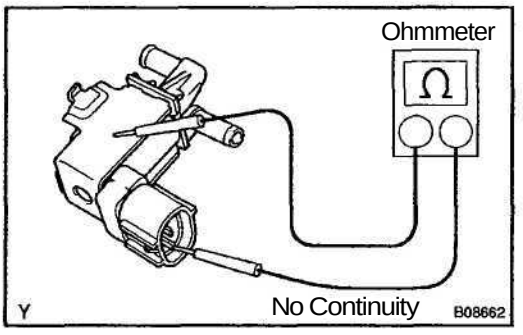

3. INSPECT VSV FOR GROUND

Using an ohmmeter, check that there is no continuity between each terminal and the body.

If there is no continuity, replace the VSV.

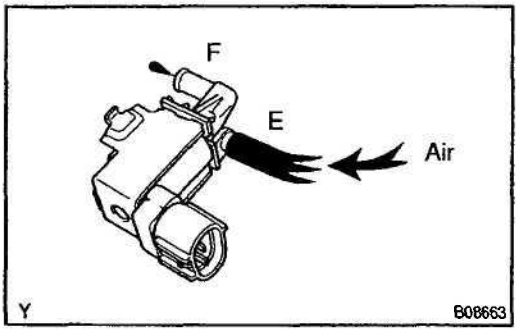

4. INSPECT VSV OPERATION

(a) Check that air does not flow from ports E to F.

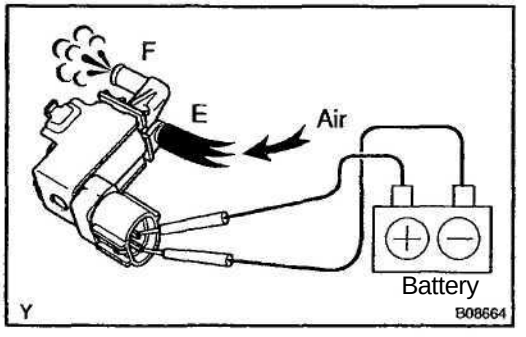

(b) Apply battery positive voltage across the terminals.

(c) Check that air flows from ports E to F.

If operation is not as specified, replace the VSV.

5. REINSTALL VSV

ENGINE COOLANT TEMPERATURE (ECT) SENSOR

COMPONENTS

SF162-01

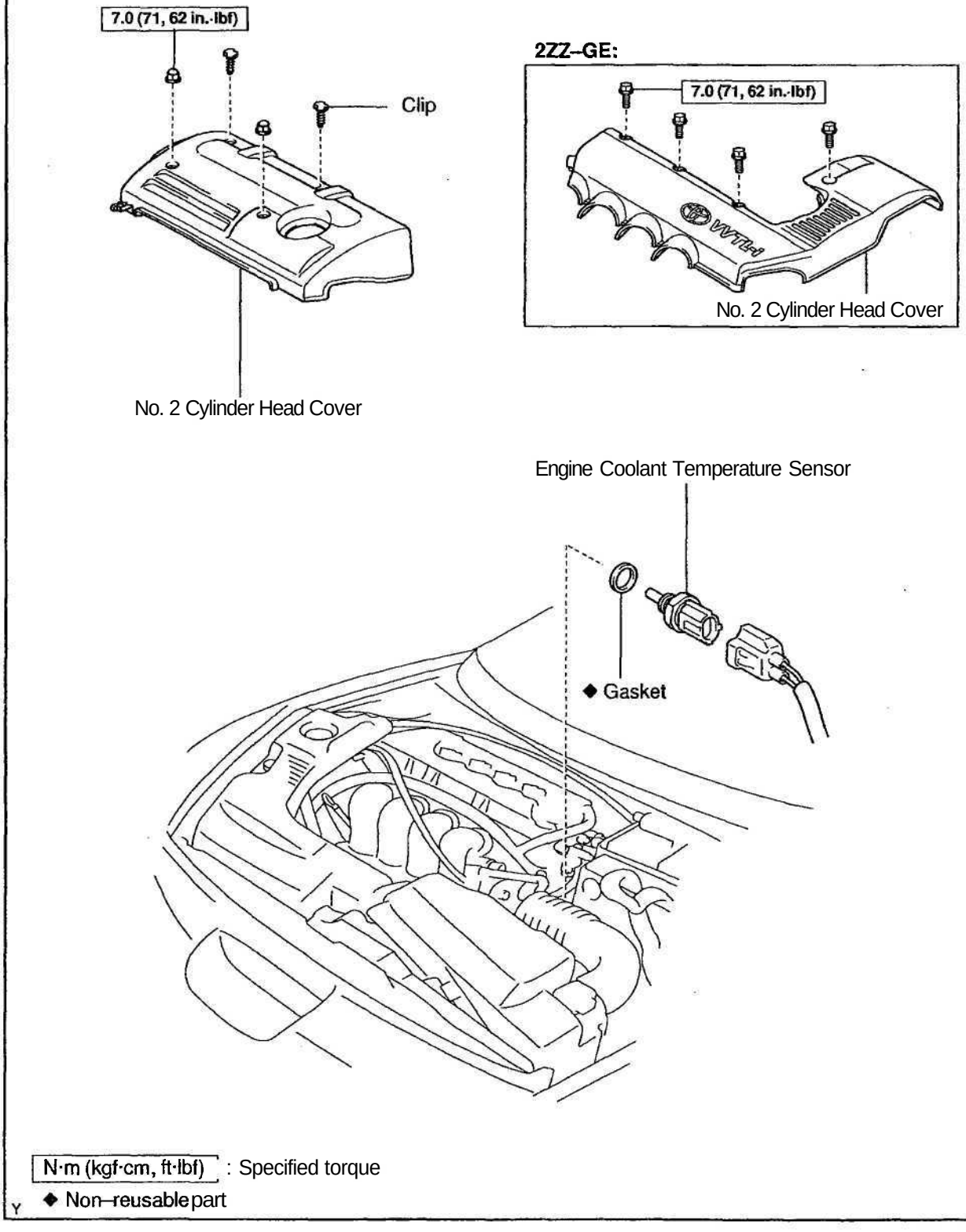

INSPECTION

1. DRAIN ENGINE COOLANT
2. REMOVE NO.2 CYLINDER HEAD COVER
3. REMOVE ECT SENSOR

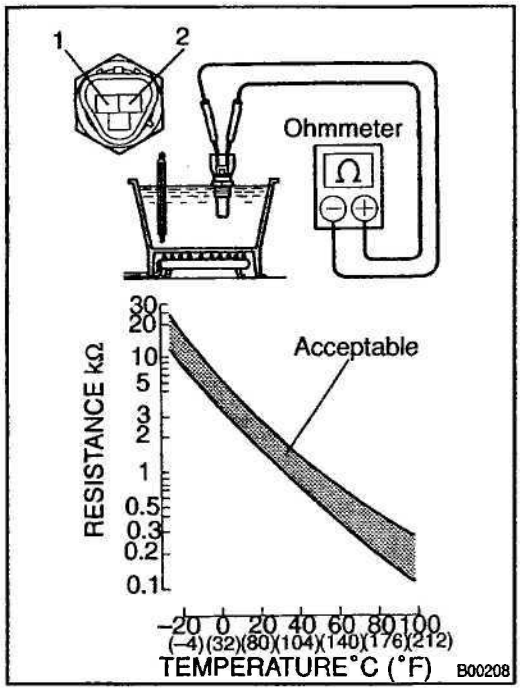

4. INSPECT ECT SENSOR RESISTANCE

Using an ohmmeter, measure the resistance between terminals 1 (E2) and 2 (THW).

Resistance: Refer to the graph

If the resistance is not as specified, replace the ECT sensor.

5. REINSTALL ECT SENSOR

Install a new gasket to the ECT sensor.

6. REINSTALL NO.2 CYLINDER HEAD COVER
7. FILL RADIATOR WITH ENGINE COOLANT

VAPOR PRESSURE SENSOR COMPONENTS

SF164–01

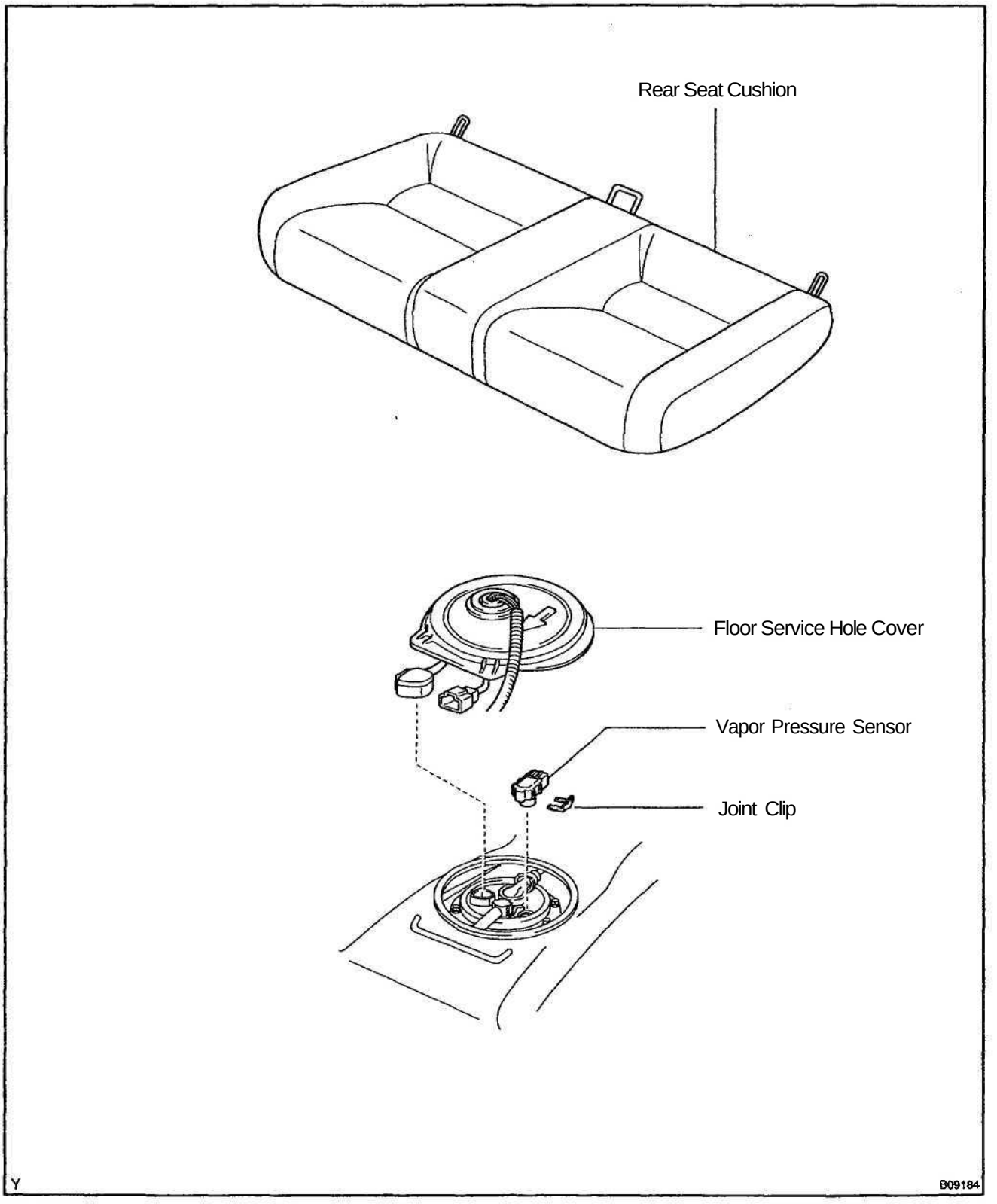

SF165-01

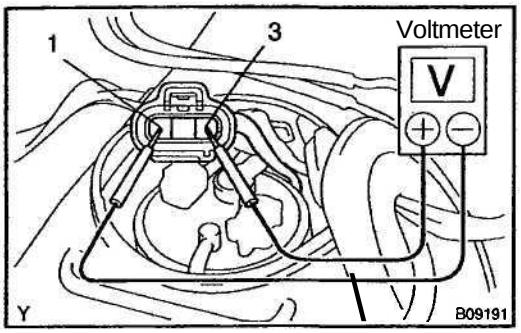

INSPECTION

1. INSPECT POWER SOURCE VOLTAGE OF VAPOR PRESSURE SENSOR

(a) Disconnect the vapor pressure sensor connector.

HINT:

Near the fuel tank.

(b) Turn the ignition switch ON.

(c) Using a voltmeter, measure the voltage between connector terminals 1 and 3 of the wiring harness side.

Voltage: 4.5 - 5.5 V

(d) Turn the ignition switch to LOCK.

(e) Reconnect the vapor pressure sensor connector.

2. INSPECT POWER OUTPUT OF VAPOR PRESSURE SENSOR

(a) Turn the ignition switch ON.

(b) Remove the fuel tank cap.

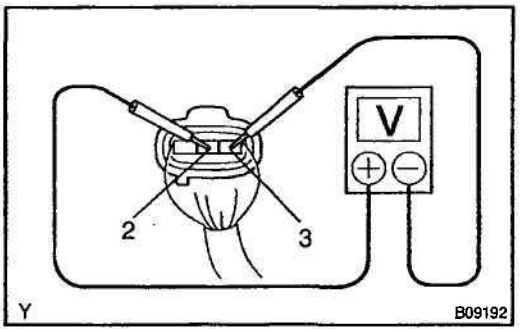

(c) Connect a voltmeter to terminals 2 and **3,** and measure the output voltage.

Voltage: 3.0 – 3.6 V

(d) Reinstall the fuel tank cap.

KNOCK SENSOR

COMPONENTS

SF166-01

1ZZ–GE:

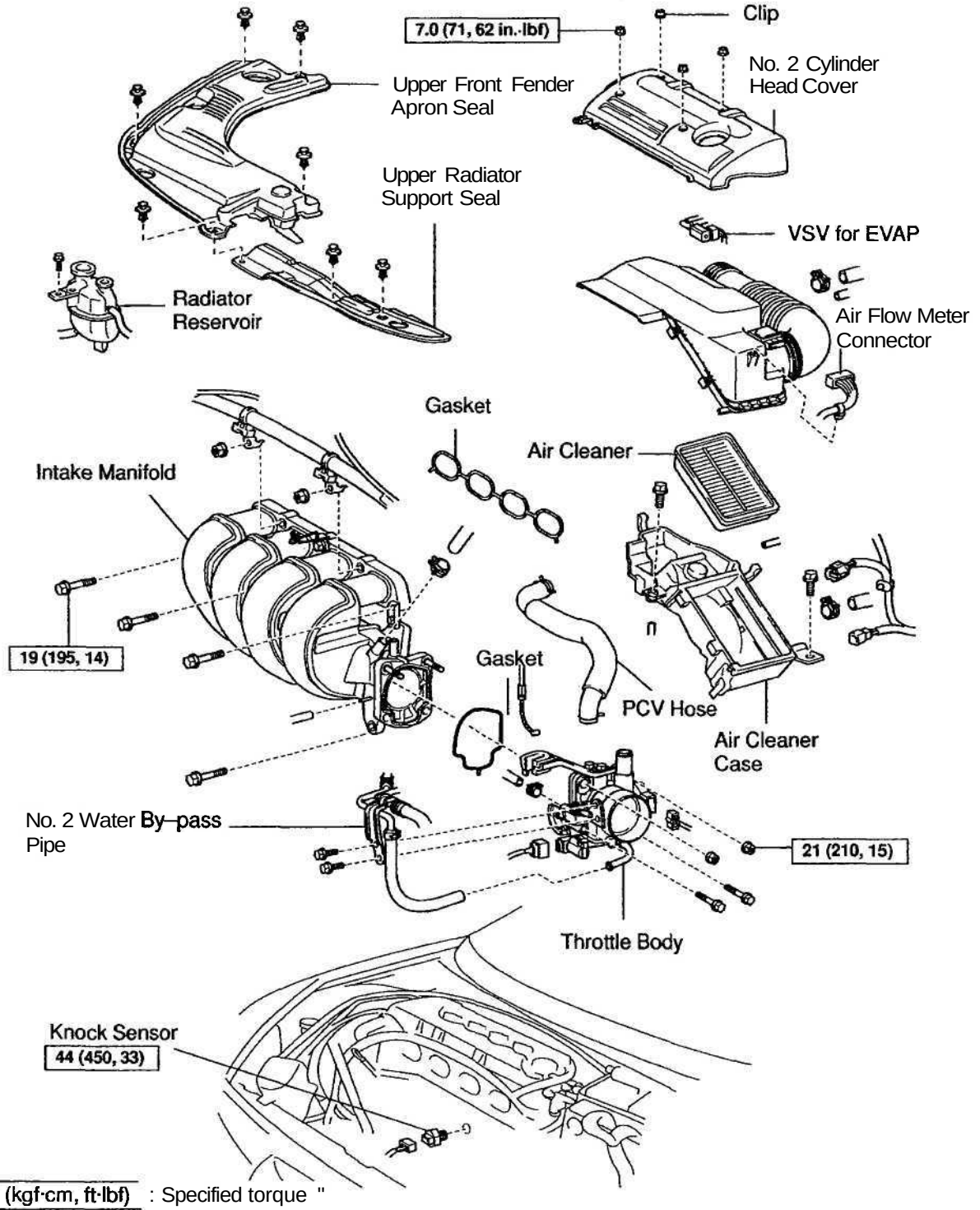

N·m (kgf·cm, ft·lbf) : Specified torque "

◆Non–reusable part

B09187

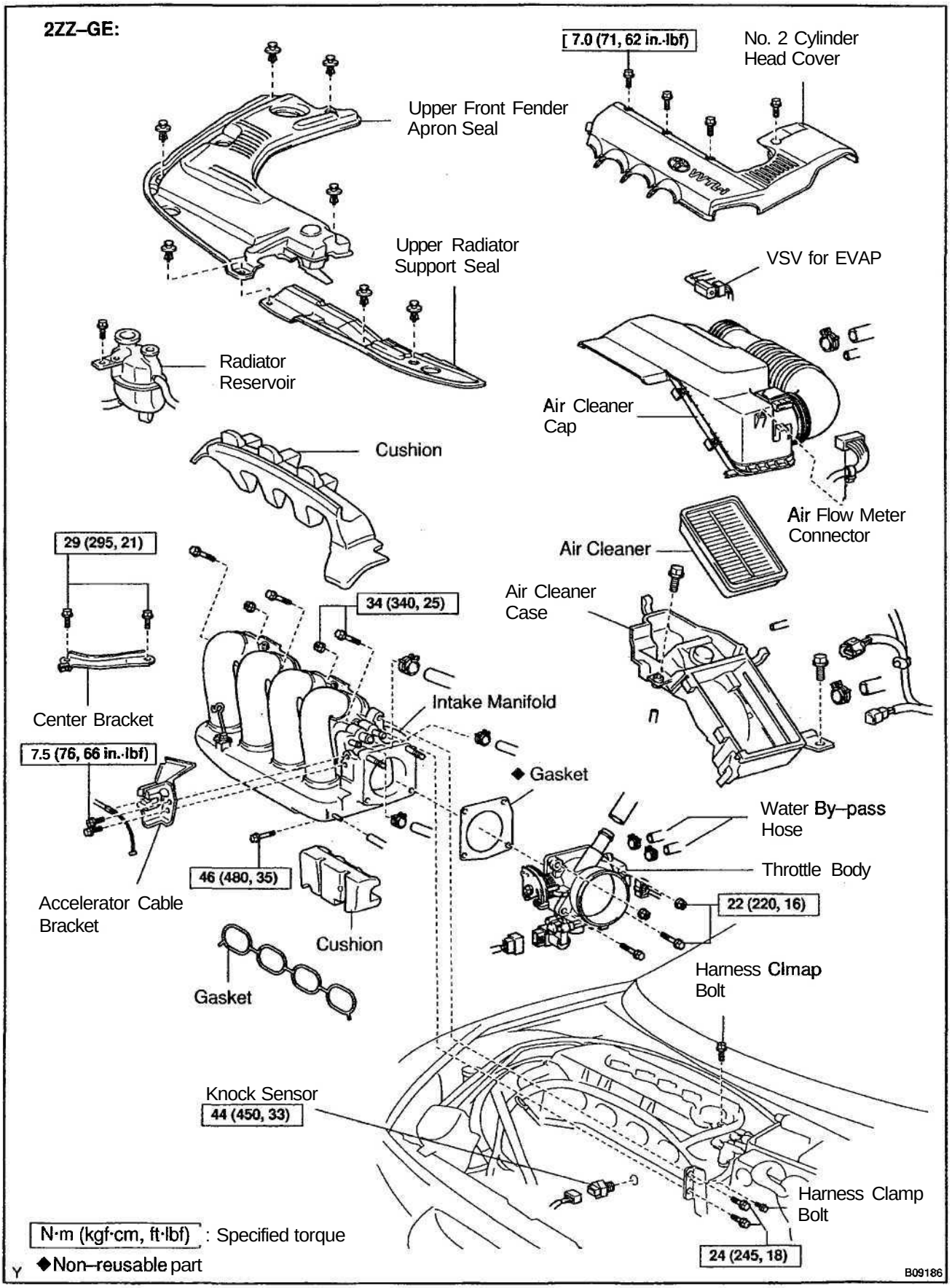
2ZZ–GE:
[7.0 (71, 62 in.·lbf)
No. 2 Cylinder Head Cover
Upper Front Fender Apron Seal
Upper Radiator Support Seal
VSV for EVAP
Radiator Reservoir
Air Cleaner Cap
Cushion
Air Flow Meter Connector
29 (295, 21)
Air Cleaner
34 (340, 25)
Air Cleaner Case
Intake Manifold
Center Bracket
7.5 (76, 66 in.·lbf)
◆ Gasket
Water By–pass Hose
Throttle Body
46 (480, 35)
22 (220, 16)
Accelerator Cable Bracket
Cushion
Harness Clmap Bolt
Gasket
Knock Sensor
44 (450, 33)
Harness Clamp Bolt
24 (245, 18)
N·m (kgf·cm, ft·lbf) : Specified torque
◆Non–reusable part
B09186

SF0A9-03

INSPECTION

1. REMOVE THROTTLE BODY
   (See page SF–36)
2. REMOVE RADIATOR RESERVOIR
   (See page CO–17)
3. REMOVE INTAKE MANIFOLD
   (See page EM–42)

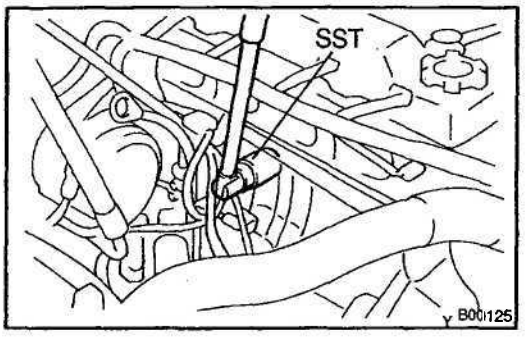

4. REMOVE KNOCK SENSOR

(a) Disconnect the knock sensor connector.

(b) Using SST, remove the knock sensor.
SST 09816–30010

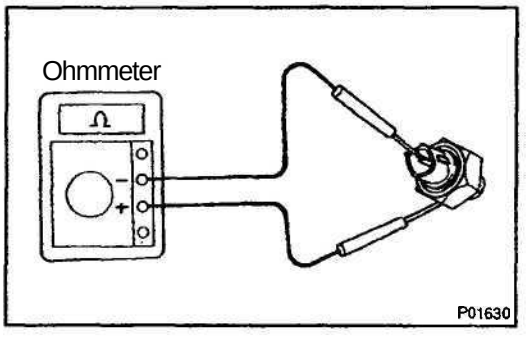

5. INSPECT KNOCK SENSOR

Using an ohmmeter, check that there is continuity between the terminal and body.

If there is continuity, replace the sensor.

6. REINSTALL KNOCK SENSOR

(a) Using SST, install the knock sensor.
SST 09816–30010

(b) Connect the knock sensor connector.

7. REINSTALL INTAKE MANIFOLD
   (See page EM–65)
8. REINSTALL RADIATOR RESERVOIR
   (See page CO–23)
9. REINSTALL THROTTLE BODY
   (See page SF–39)

HEATED OXYGEN SENSOR

COMPONENTS

SF167-01

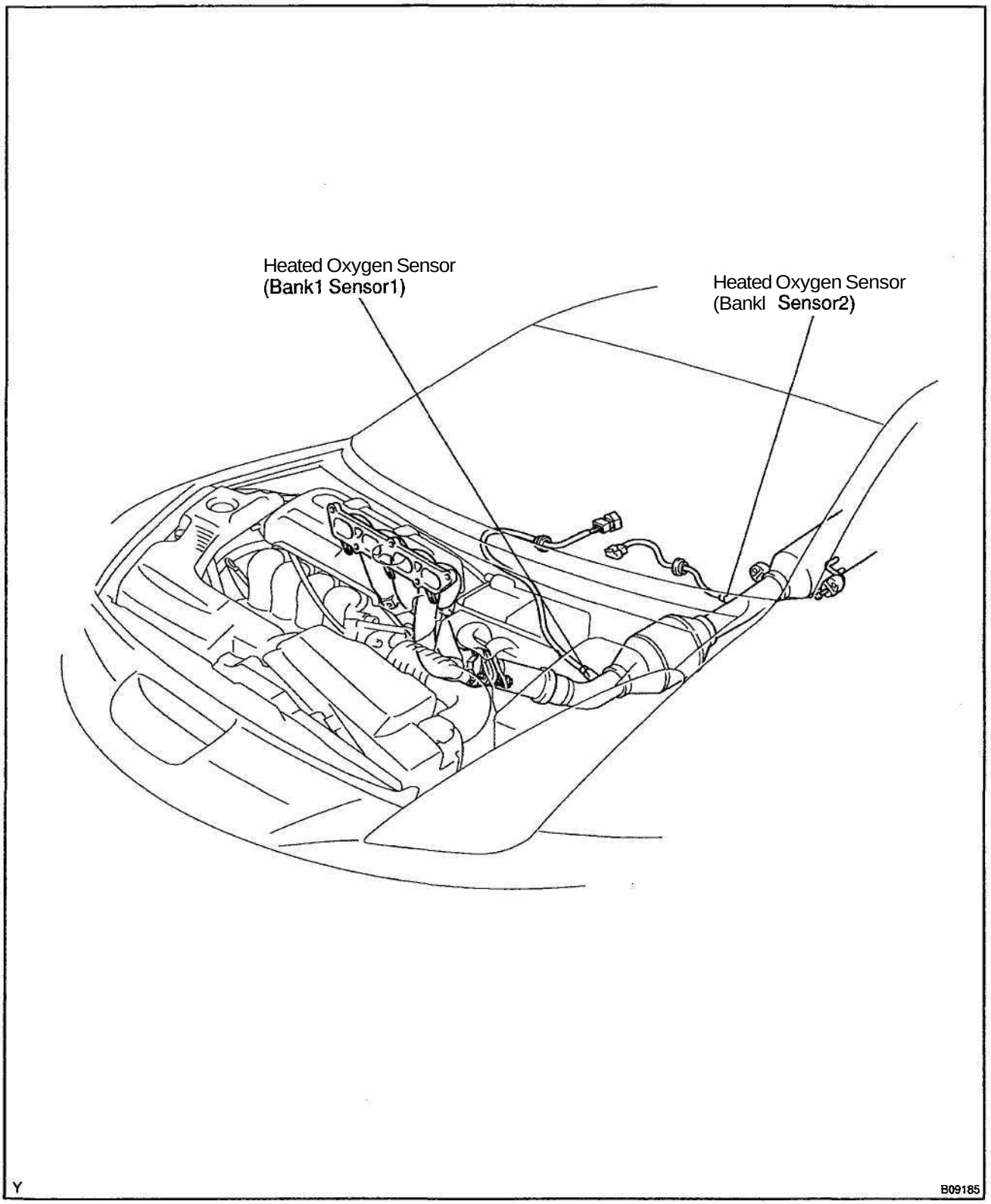

SF0AA-03

INSPECTION

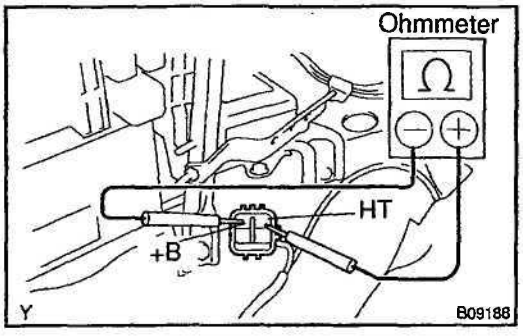

1. INSPECT HEATER RESISTANCE OF HEATED OXYGEN SENSOR (Bank1 Sensor1)

(a) Disconnect the oxygen sensor connector.

(b) Using an ohmmeter, measure the resistance between the terminals +B and HT.

Resistance: 11 – 16 a at 20°C (68°F)

If the resistance is not as specified, replace the sensor.

Torque: 44 N·m (450 kgf·cm, 31 ft·lbf)

(c) Reconnect the oxygen sensor connector.

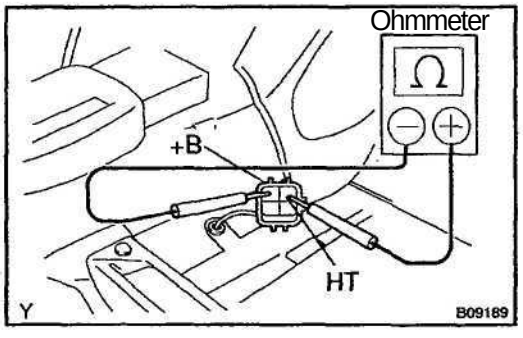

2. INSPECT HEATER RESISTANCE OF HEATED OXYGEN SENSOR (Bank1, Sensor2)

(a) Remove the passenger's seat.

(b) Take out the floor carpet.

(c) Disconnect the oxygen sensor connector.

(d) Using an ohmmeter, measure the resistance between the terminals +B and HT.

Resistance: 11 – 16 a at 20°C (68°F)

If the resistance is not as specified, replace the sensor.

Torque: 44 N·m (450 kgf·cm, 31 ft·lbf)

(e) Reconnect the oxygen sensor connector.

(f) Resistance the floor carpet.

(g) Reinstall the passenger's seat.

ENGINE CONTROL MODULE (ECM)

COMPONENTS

SF60F-02

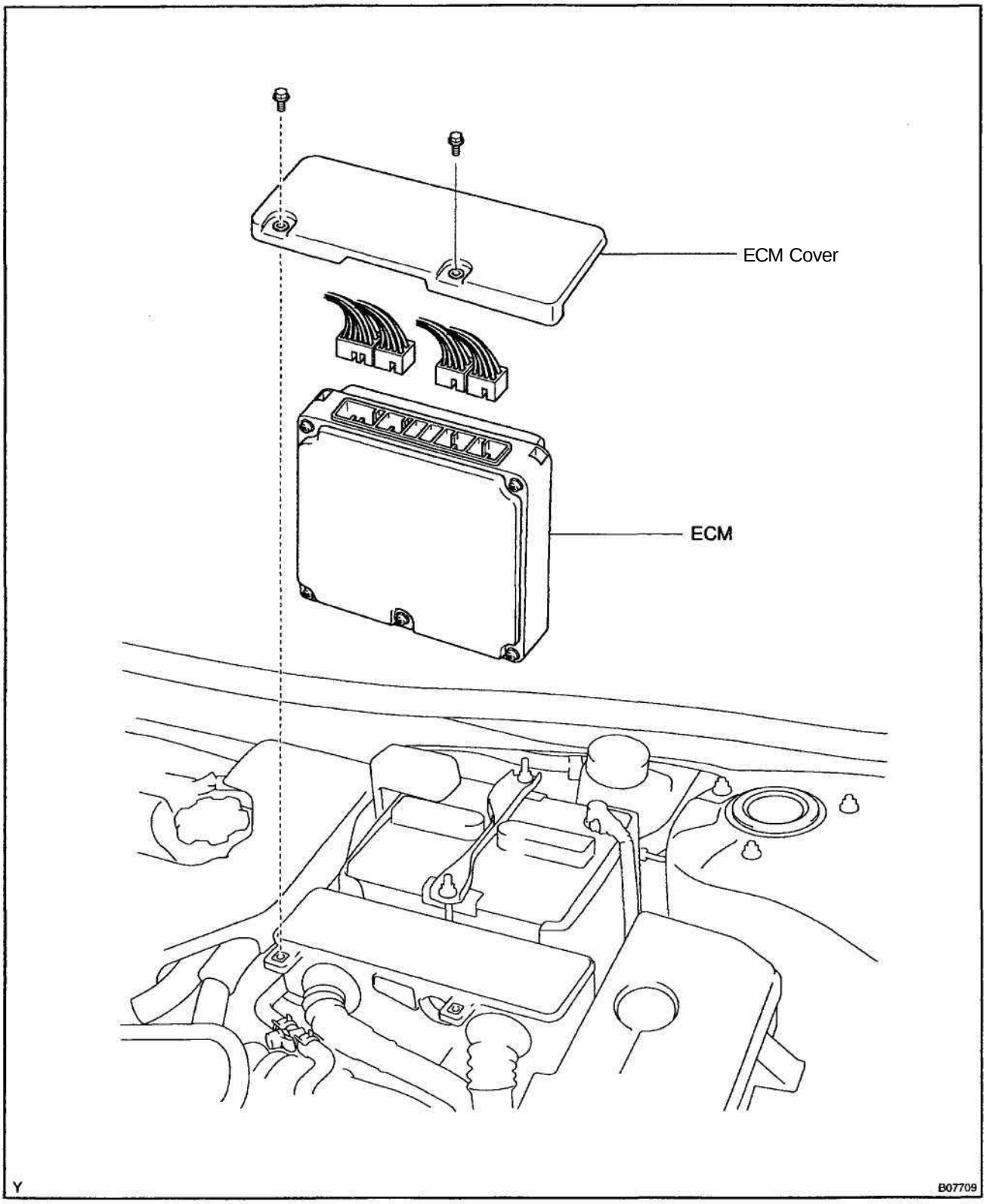

INSPECTION

1. REMOVE ECM
2. INSPECT ECM (See page DI–20)
3. REINSTALL ECM

FUEL CUT RPM

SF0AD-05

INSPECTION

1. WARM UP ENGINE

Allow the engine to warm up to normal operating temperature.

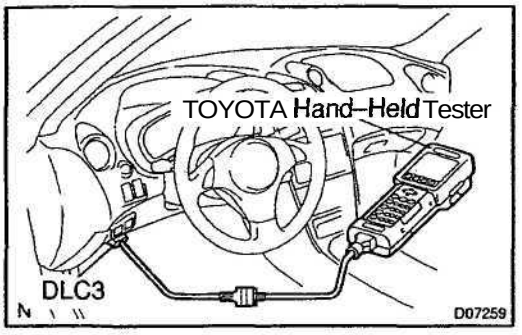

2. CONNECT TOYOTA HAND-HELD TESTER OR OBD II SCAN TOOL

(a) Connect the TOYOTA hand-held tester or OBD II scan tool to the DLC3.

(b) Please refer to the TOYOTA hand-held tester or OBD II scan tool operator's manual for further details.

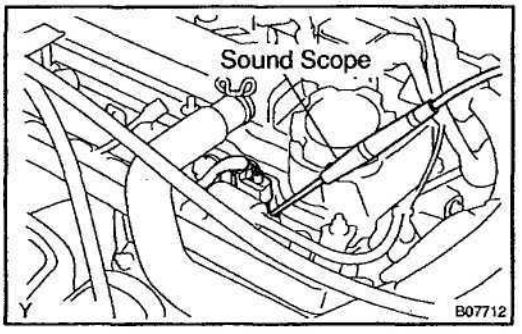

3. INSPECT FUEL CUT OFF RPM

(a) Increase the engine speed to at least 3,500 rpm.

(b) Use a sound scope to check for injector operating noise.

(c) Check that when the throttle lever is released injector, operation noise stops momentary and then resumes.

HINT:

Measure with the A/C OFF.

Fuel return rpm: 1,400 rpm

4. DISCONNECT TOYOTA HAND-HELD TESTER OR OBD II SCAN TOOL

-MEMO-

COOLING

COOLANT. CO–1
WATER PUMP. CO–4
THERMOSTAT. CO–8
RADIATOR. CO–12
ELECTRIC COOLING FAN. CO–24
COOLING FAN RELAY. CO–31

CO

COOLANT

INSPECTION

CO04D–04

HINT:

Check the coolant level when the engine is cold.

1. CHECK ENGINE COOLANT LEVEL AT RESERVOIR

The engine coolant level should be between the "LOW" and "FULL" line.

If low, check for leaks and add Toyota Long Life Coolant" or equivalent up to the "FULL" line.

2. CHECK ENGINE COOLANT QUALITY

(a) Remove the reservoir cap.

CAUTION:

To avoid the danger of being burned, do not remove the reservoir the cap while the engine and radiator are still hot, as fluid and steam can be blown out under pressure.

(b) There should not be any excessive deposits of rust or scale around the reservoir cap or reservoir filler hole, and the coolant should be free from oil.

If excessively dirty, replace the coolant.

(c) Reinstall the reservoir (Jap.

CO0WX-01

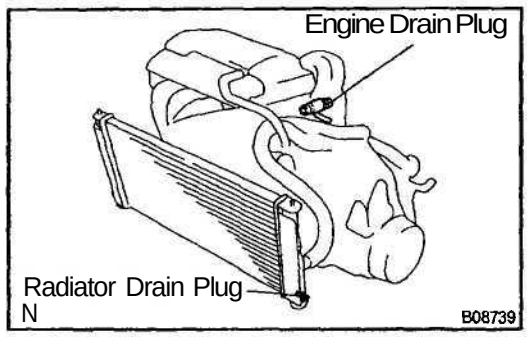

REPLACEMENT

HINT:

For replacing the heater parts such a heater core or heater hose, refer to AC-29.

1. DRAIN ENGINE COOLANT

(a) Remove the reservoir cap.

CAUTION:

To avoid the danger of being burned, do not remove the reservoir cap while the engine and radiator are still hot, as fluid and steam can be blown out under pressure.

(b) Loosen the radiator drain plug (on the left under side of the radiator tank) and engine drain plug on the engine coolant drain union (on the left rear of the cylinder block), and drain the coolant.

(c) Close the drain plugs.

Torque: 12.7 N·m (130 kgf·cm, 9 ft.lbf) for engine

2. FILL ENGINE COOLANT

(a) Remove the upper front fender apron seal and upper radiator support seal.

CO

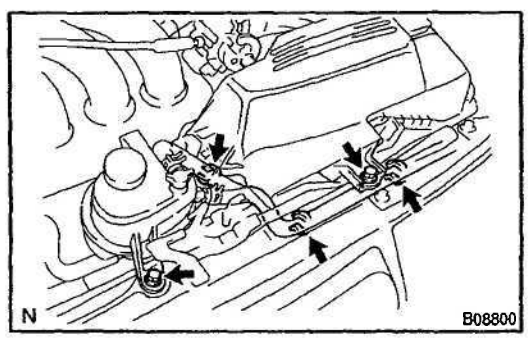

(b) Remove the 2 bolts.

(c) Disconnect the 3 clamps and 2 hoses, then place hoses on air cleaner case.

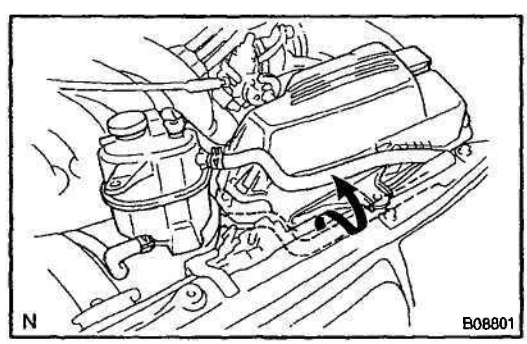

(d) Lift the engine coolant reservoir and hook it on a hood latch to fix.

(e) Remove the bleeder plug.

(f) Supply coolant of approx. 3.7 liters into the reserve tank until the level reaches FULL line.

- Use of improper coolants may damage engine cooling system.
- Use "Toyota Long Life Coolant" or equivalent and mix it with plain water according to the manufactures directions.
- Use of the coolant which includes more than 50% [freezing protection down to –35°C (-31 °F)] or 60% [freezing protection down to –50°C (–58°F)] of ethylene–glycol is recommended, but not more than 70%.

NOTICE:

- **Do not use an alcohol type coolant or plain water alone.**
- **The coolant should be mixed with plain water (preferably demineralized water or distilled water).**

Capacity:

1ZZ–FE:

M/T	5.7 litters (6.0 US qts, 5.0 Imp. qts)
A/T	5.6 litters (5.9 US qts, 4.9 Imp. qts)

2ZZ–GE:

M/T	5.9 litters (6.2 US qts, 5.2 Imp. qts)
A/T	5.8 litters (6.1 US qts, 5.1 Imp. qts)

HINT:

When the level can not be lowered before the supply of the 3.7 liters coolant, squeeze the radiator lower hose several times while blocking the hole in the bleeder plug with a finger, and surely supply the coolant.

(g) Start the engine with the reservoir cap and the bleeder plug removed and warm it up until the cooling fan blows first and then stops.

HINT:

At this time, the A/C switch should be OFF.

(h) Additionally supply 500 cc coolant with the engine idling.

(i) Install the bleeder plug and reservoir cap.

HINT:

Close the reservoir cap by marking approx. 2.5 rotations until clicks is heard.

(j) Repeat 5 sec. engine operation at 3,000 rpm and 5 sec. idling alternately for 15 min. or more.

(k) After complete cooling of the engine, the level shall be between Low and FULL.

HINT:

After warming–up of engine, the level shall be over the FULL.

(l) Connect the 2 hoses and clamps.

(m) Install the 2 bolts.

(n) Install the cover.

3. CHECK FOR COOLANT LEAKS

4. CHECK ENGINE COOLANT SPECIFIC GRAVITY CORRECTLY

WATER PUMP

COMPONENTS

CO04F-04

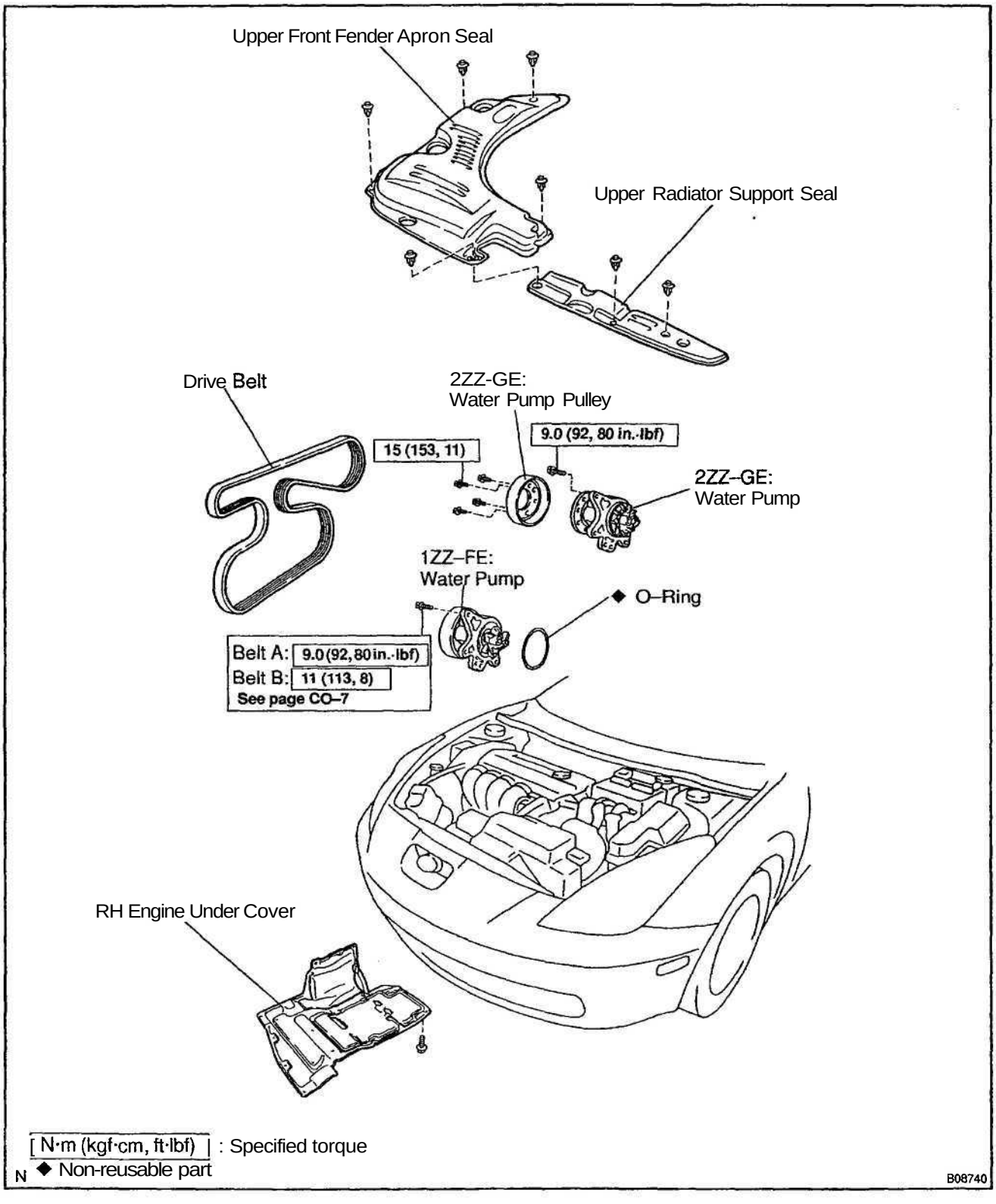

CO

N

REMOVAL

1. REMOVE RH ENGINE UNDER COVER
2. DRAIN ENGINE COOLANT
3. REMOVE DRIVE BELT (See page CH-7)

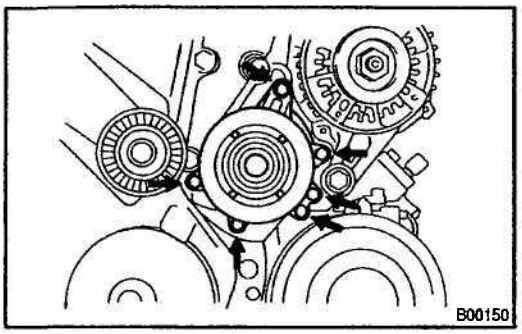

4. **1ZZ-FE:**
   REMOVE WATER PUMP
   (a) Remove the 6 bolts, water pump and O-ring.
   (b) Clean up the engine coolant from the water chamber room.

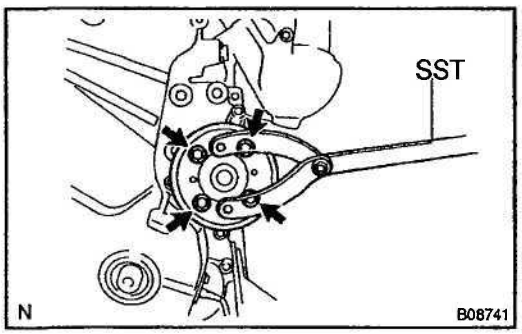

5. **2ZZ-GE:**
   REMOVE WATER PUMP
   (a) Using SST, remove the 4 water pump pulley set bolts.
   SST 09960-10010 (09962-01000, 09963-00600)
   (b) Remove the water pump pulley.
   (c) Remove the 6 bolts, water pump and O-ring.
   (d) Clean up the engine coolant from the water chamber room.

NOTICE:
Do not remove the RH engine mounting bracket and generator when the water pump alone is replaced.

CO

CO0H1-04

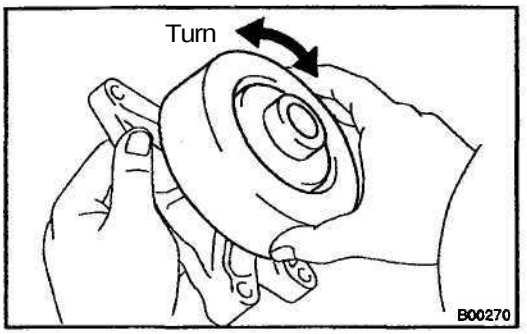

INSPECTION

INSPECT WATER PUMP

(a) Visually check the drain hole for coolant leakage.
If leakage is found, replace the water pump.

(b) Turn the pulley, and check that the water pump bearing moves smoothly and quietly.

If necessary, replace the water pump.

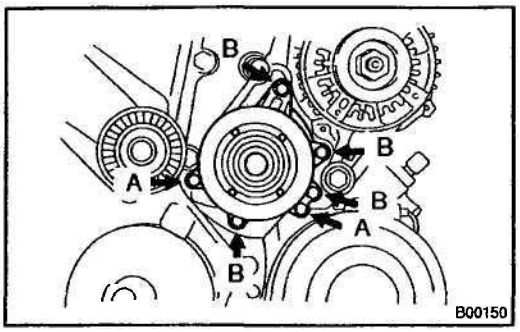

INSTALLATION

1. 1ZZ-FE:

INSTALL WATER PUMP

(a) Place a new O–ring on the timing chain cover.

(b) Install the water pump with the 6 bolts.

Torque:

Bolt A 9.0 N·m (92 kgf·cm, 80 in.·lbf)

Bolt B 11 N·m (113 kgf·cm, 8 ft·lbf)

HINT:

Each bolt length is indicated in the illustration.

A: 30 mm (1.18 in.)

B: 35 mm (1.38 in.)

2. 2ZZ–GE:

INSTALL WATER PUMP

(a) Place a new O–ring on the timing chain cover.

(b) Install the water pump with the 6 bolts.

Torque: 9.0 N·m (92 kgf·cm, 80 in.·lbf)

HINT:

Each bolt length is indicated in the illustration.

A: 30 mm (1.18 in.)

B: 35 mm (1.38 in.)

(c) Install the water pump pulley.

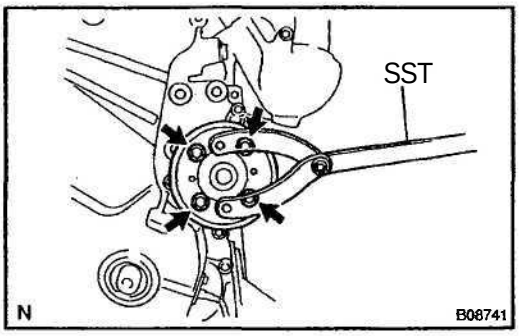

(d) Using SST, tighten the 4 water pump pulley set bolts.

SST 09960–10010 (09962–01000, 09963–00600)

Torque: 15 N·m (153 kgf·cm, 11 ft·lbf)

3. INSTALL RH ENGINE UNDER COVER

4. INSTALL DRIVE BELT

(See page CH–17)

5. FILL WITH ENGINE COOLANT

6. START ENGINE AND CHECK FOR LEAKS

7. RECHECK ENGINE COOLANT LEVEL

CO

THERMOSTAT

COMPONENTS

CO04J-04

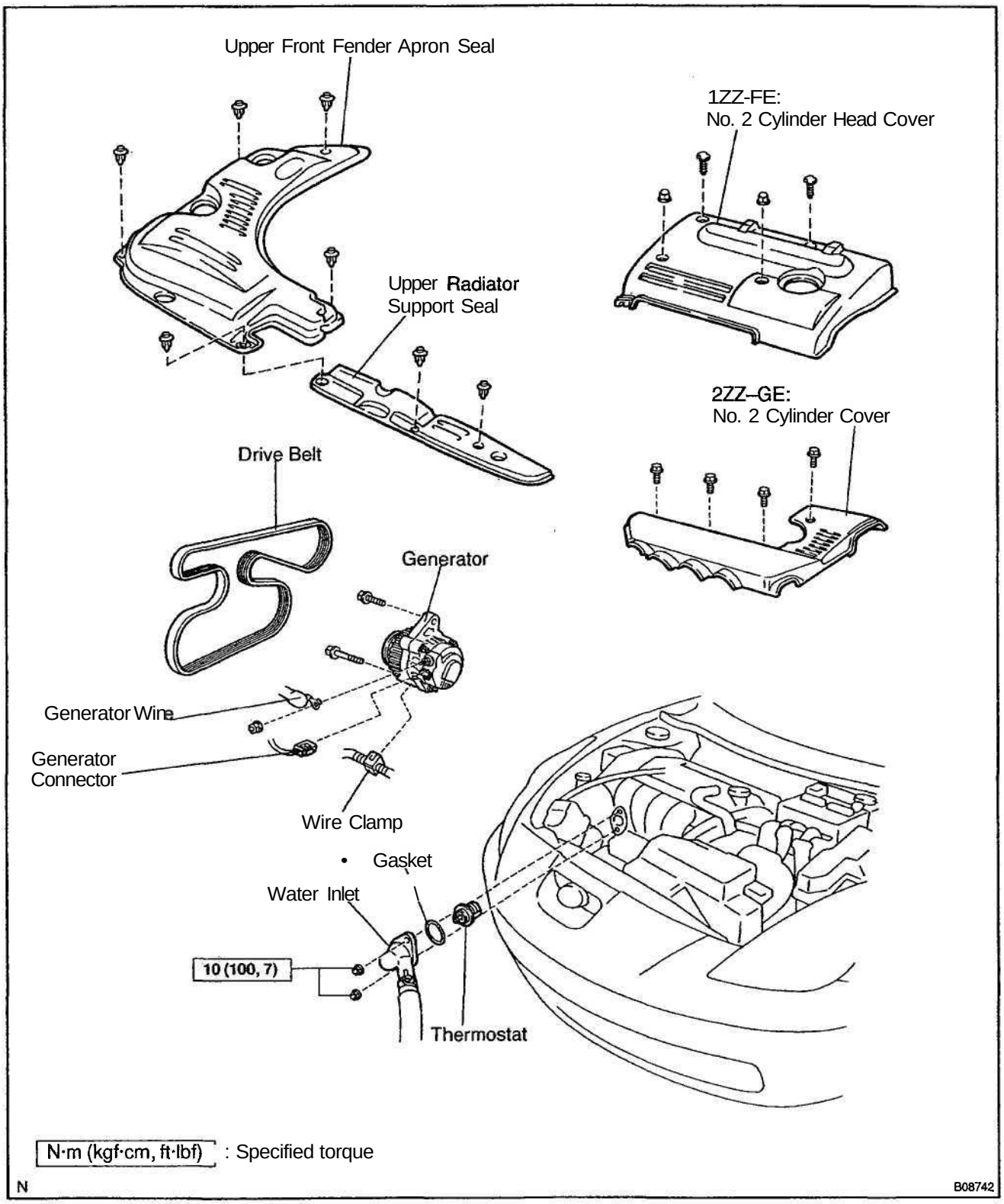

CO

REMOVAL

HINT:

Removal of the thermostat would have an adverse effect, causing a lowering of cooling efficiency. Do not remove the thermostat, even if the engine tends to overheat.

1. DRAIN ENGINE COOLANT

2. REMOVE DRIVE BELT AND GENERATOR

(See page CH–7)

3. REMOVE WATER INLET AND THERMOSTAT

(a) Remove the 2 nuts, and disconnect the water inlet from the cylinder block.

(b) Remove the thermostat.

(c) Remove the gasket from the thermostat.

CO64L-04

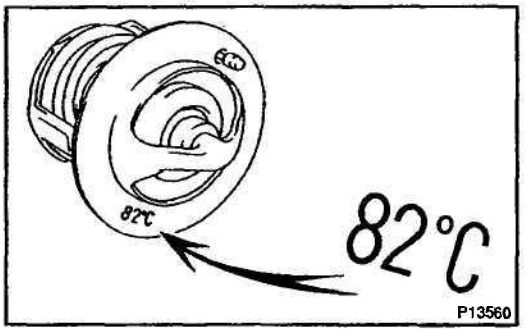

INSPECTION

INSPECT THERMOSTAT

HINT:

The thermostat is numbered with the valve opening temperature.

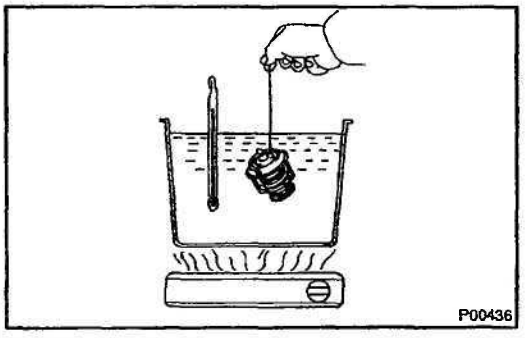

(a) Immerse the thermostat in water and gradually heat the water.

(b) Check the valve opening temperature.

Valve opening temperature:
80.0 - 84.0°C (176 - 183°F)

If the valve opening temperature is not as specified, replace the thermostat.

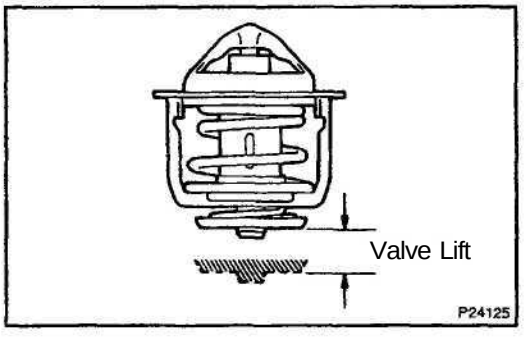

(c) Check the valve lift.

Valve lift: 10 mm (0.39 in.) or more at 90°C (194°F)

If the valve lift is not as specified, replace the thermostat.

(d) Check that the valve is fully closed when the thermostat is at low temperatures (below 40°C (104°F)).

If not closed, replace the thermostat.

CO0418-04

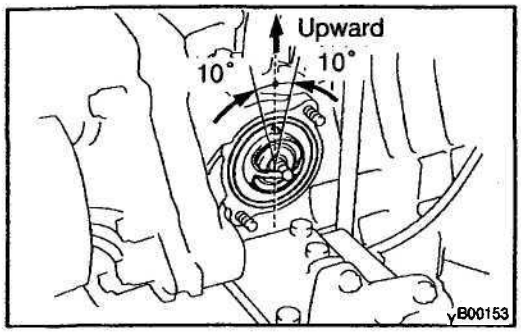

INSTALLATION

1. PLACE THERMOSTAT IN CYLINDER BLOCK

(a) Install a new gasket to the thermostat.

(b) Install the thermostat with the jiggle valve upward.

HINT:

The jiggle valve may be set within 10° of either side of the prescribed position.

2. INSTALL WATER INLET

Install the water inlet with the 2 nuts.

Torque: 10 N·m (100 kgf·cm, 7 ft·lbf)

3. INSTALL GENERATOR AND DRIVE BELT

(See page CH–17)

4. FILL WITH ENGINE COOLANT

5. START ENGINE, AND CHECK FOR COOLANT LEAKS

RADIATOR

ON–VEHICLE CLEANING

CO04N–01

Using water or a steam cleaner, remove any mud or dirt from the radiator core.

NOTICE:

If using a high pressure type cleaner, be careful not to deform the fins of the radiator core. (i.e. Maintain a distance between the cleaner nozzle and radiator core.)

CO040-04

ON–VEHICLE INSPECTION

1. REMOVE RESERVOIR CAP

CAUTION:

To avoid the danger of being burned, do not remove the reservoir cap while the engine and radiator are still hot, as fluid and steam can be blown out under pressure.

2. INSPECT RESERVOIR CAP

NOTICE:

- **If the reservoir cap has contaminations, always rinse it with water.**
- **Before using a radiator cap tester, wet the relief valve and pressure valve with engine coolant or water.**
- **When performing steps (a) and (b) below, keep the radiator cap tester at an angle of over 30° above the horizontal.**

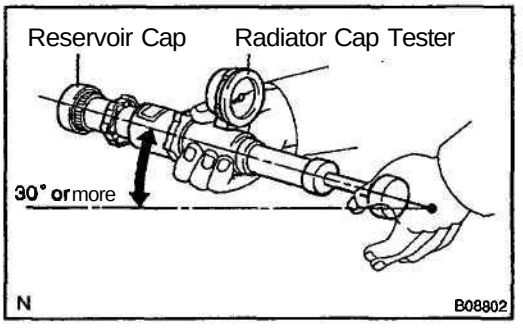

(a) Using a radiator cap tester, slowly pump the tester and check that air is coming from the vacuum valve.
Pump speed: 1 push/(3 seconds or more)

NOTICE:

Push the pump at a constant speed.

If air is not coming from the vacuum valve, replace the reservoir cap.

(b) Pump the tester and measure the relief valve opening pressure.
Pump speed: 1 push within 1 seconds

NOTICE:

This pump speed is for the first pump only (in order to close the vacuum valve). After this, the pump speed can be reduced.

Standard opening pressure:
93 – 123 kPa (0.95 – 1.25 kgf/cm^2, 13.5 – 17.8 psi)
Minimum opening pressure:
79 kPa (0.8 kgf/cm^2, 11.5 psi)

HINT:

Use the tester's maximum reading as the opening pressure.
If the opening pressure is less than minimum, replace the reservoir cap.

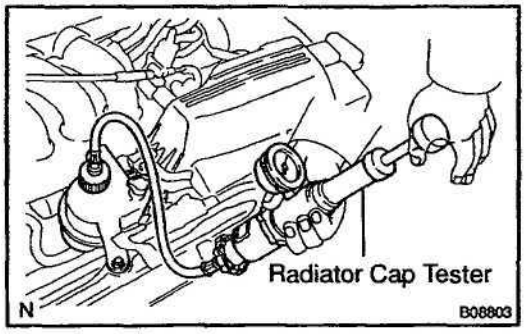

3. INSPECT COOLING SYSTEM FOR LEAKS

(a) Fill the radiator with coolant and attach a radiator cap tester.

(b) Warm up the engine.

(c) Pump it to 118 kPa (1.2 kgf/cm^2, 17.1 psi), and check that the pressure does not drop.

If the pressure drops, check the hoses, radiator or water pump for leaks. If no external leaks are found, check the heater core, cylinder block and head.

4. REINSTALL RESERVOIR CAP

CC04P-03

COMPONENTS

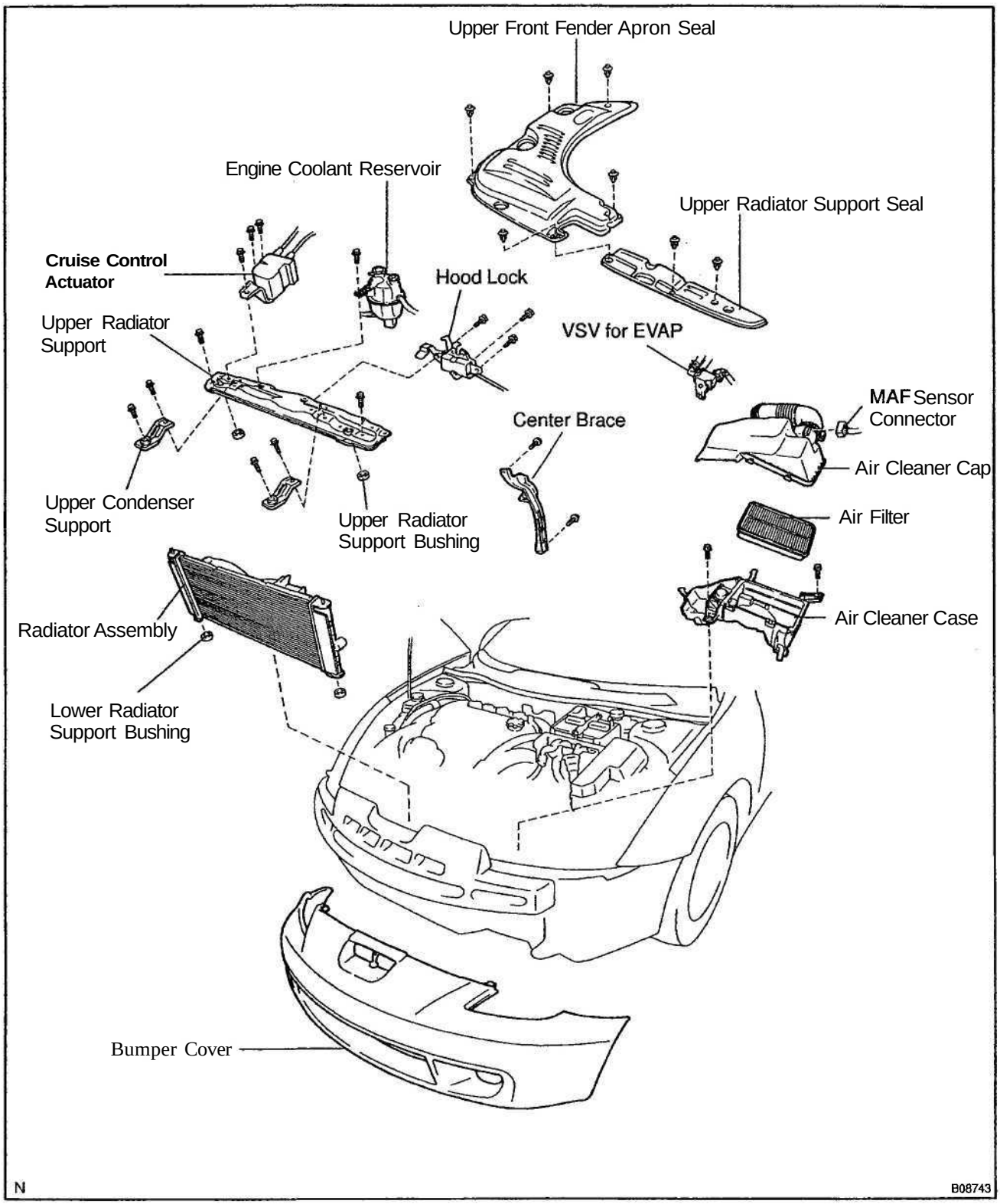

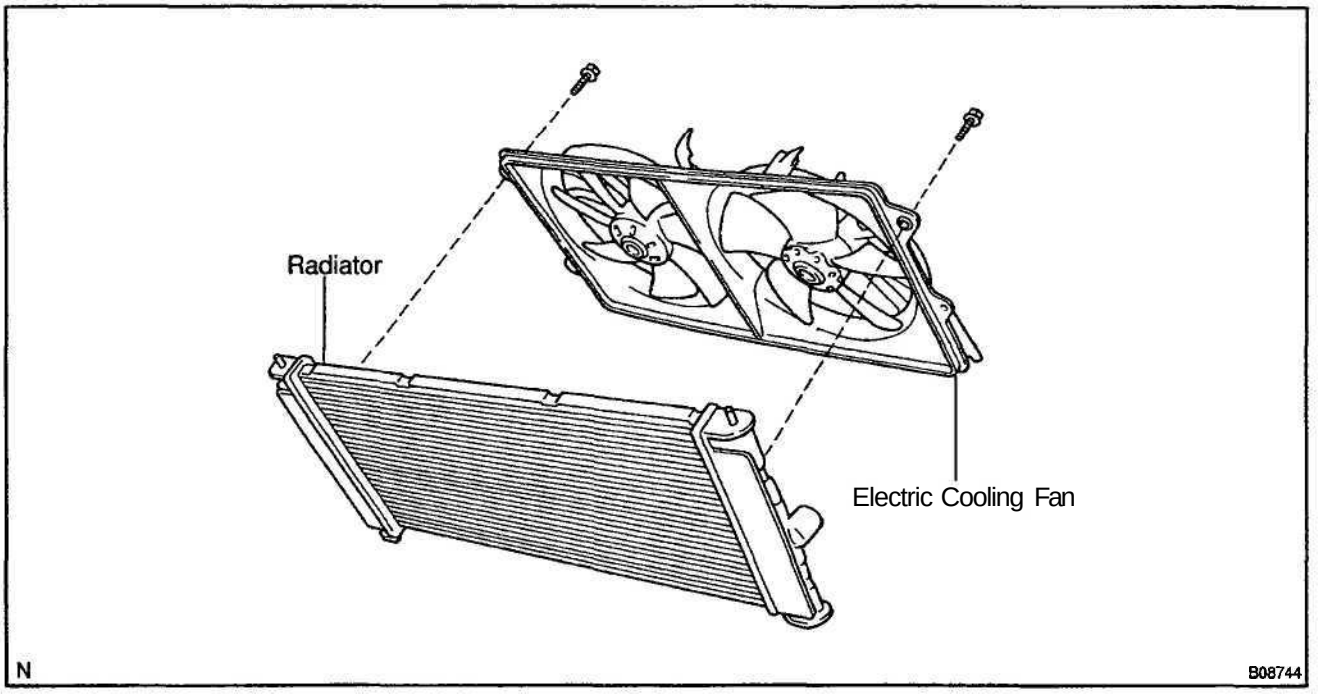
Radiator
Electric Cooling Fan
N
B08744

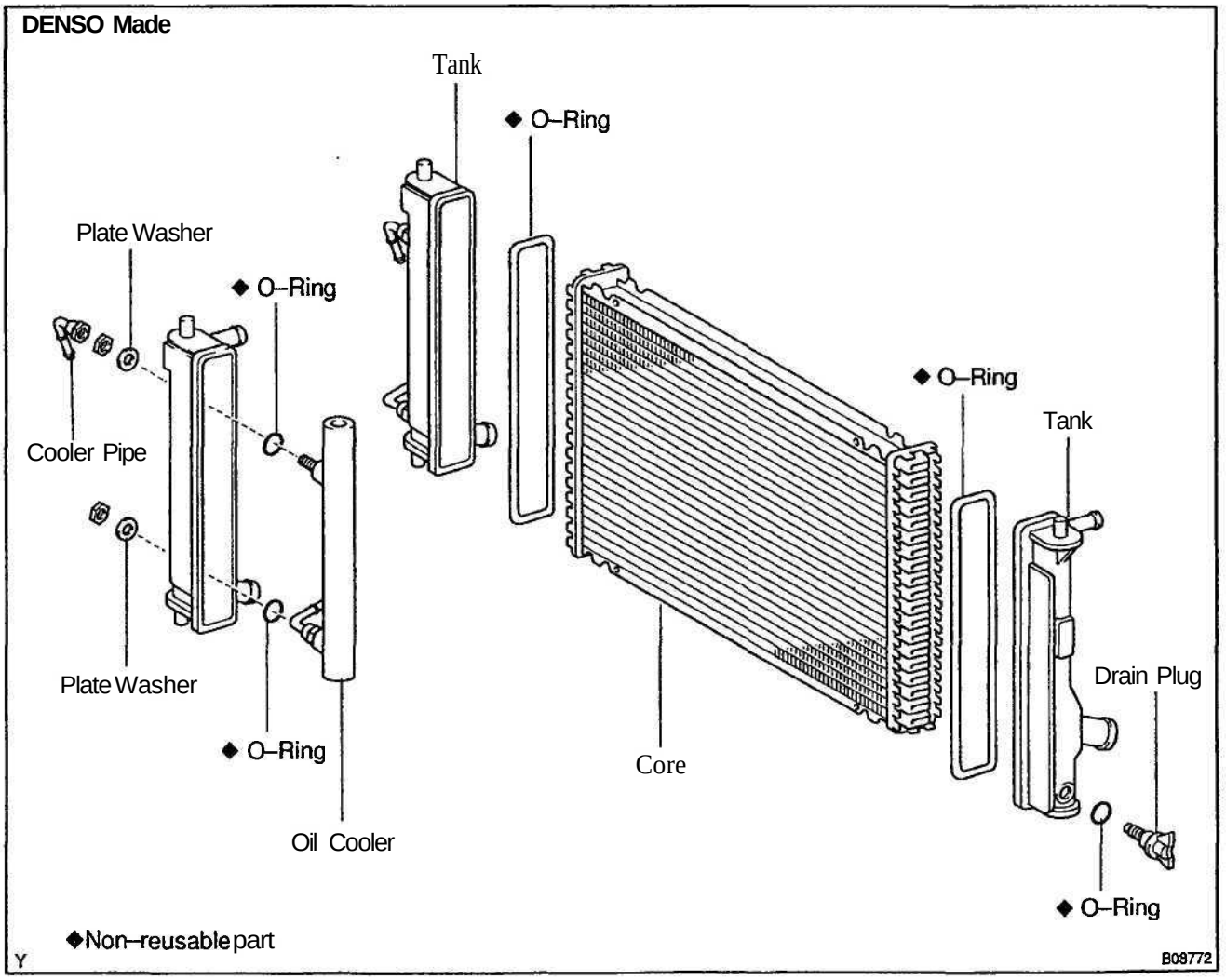
DENSO Made
Tank
◆ O–Ring
Plate Washer
◆ O–Ring
Cooler Pipe
◆ O–Ring
Tank
Plate Washer
Drain Plug
◆ O–Ring
Core
◆ O–Ring
Oil Cooler
◆ O–Ring
◆Non–reusable part
Y
B03772

CO0X4-01

REMOVAL

1. REMOVE UPPER FRONT FENDER APRON SEAL AND UPPER RADIATOR SUPPORT SEAL
2. DRAIN ENGINE COOLANT
3. REMOVE BUMPER COVER (See page BO–4)
4. REMOVE AIR CLEANER

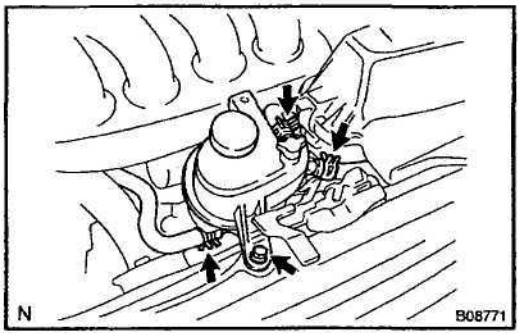

5. REMOVE ENGINE COOLANT RESERVOIR

(a) Disconnect the 3 radiator reservoir hoses.
(b) Remove the bolt and engine coolant reservoir.

6. REMOVE RADIATOR ASSEMBLY

(a) Disconnect the No. 1 electric cooling fan connector.
(b) Disconnect the No. 2 electric cooling fan connector.
(c) Disconnect the upper radiator hose.
(d) Disconnect the lower radiator hose.
(e) Disconnect the 2 A/T oil cooler hoses.

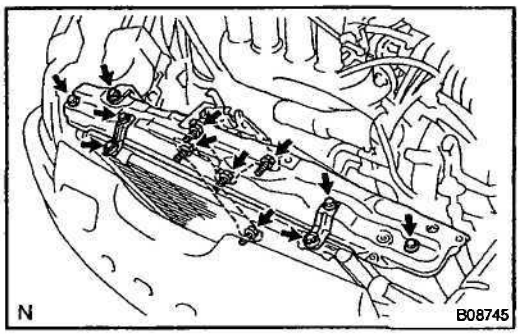

(f) Remove the 3 bolts, and disconnect the hood lock.
(g) Remove the 2 bolts and center brace.
(h) Remove the 2 bolts, 2 nuts and 2 condensor upper supports.
(i) w/ Cruise control system:
Remove the bolt, and disconnect the cruise control accuator.
(j) Remove the 2 bolts and radiator upper support.
(k) Remove the 2 upper radiator support bushings.
(l) Remove the radiator assembly.
(m) Remove the 2 lower radiator support bushings.

7. REMOVE ELECTRIC COOLING FAN FROM RADIATOR

Remove the 2 bolts and cooling fan assembly.

DISASSEMBLY

1. REMOVE DRAIN PLUG

(a) Remove the drain plug.

(b) Remove the O–ring.

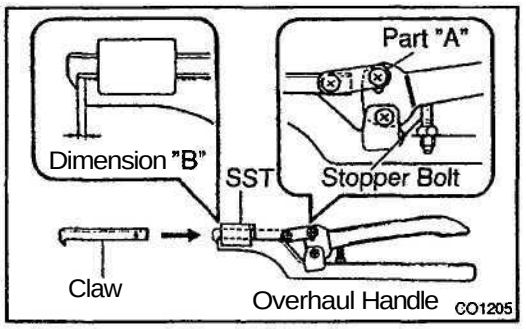

2. DENSO Made:
ASSEMBLE SST

SST 09230–01010

(a) Install the claw to the overhaul handle, inserting it in the hole in part "A" as shown in the diagram.

(b) While gripping the handle, adjust the stopper bolts so that dimension "B" shown in the diagram is 0.2 - 0.3 mm (0.008 – 0.012 in.).

NOTICE:

If this adjustment is not done the claw may be damaged.

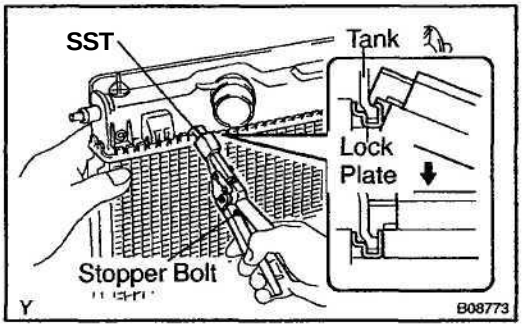

3. DENSO Made:
UNCAULK LOCK PLATES

Using SST to release the caulking, squeeze the handle until stopped by the stopper bolts.

SST 09230–01010

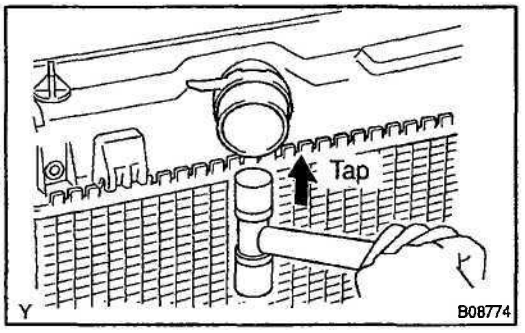

4. DENSO Made:
REMOVE TANKS AND O–RINGS

Lightly tap the bracket of the radiator (or radiator inlet or outlet) with a soft-faced hammer, and remove the tank and the O–ring.

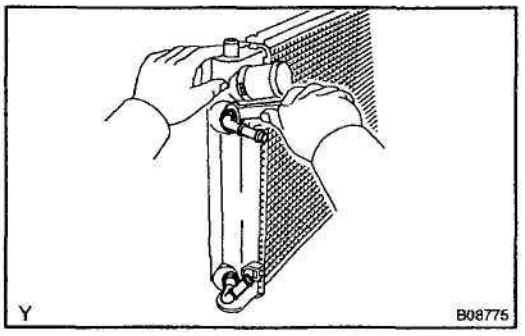

5. A/T (DENSO Made):
REMOVE OIL COOLER FROM LOWER TANK

(a) Loosen the nut, and remove the cooler pipe.

(b) Remove the 2 nuts and 2 plate washers.

(c) Remove the oil cooler and 2 O–rings.

CO04S-04

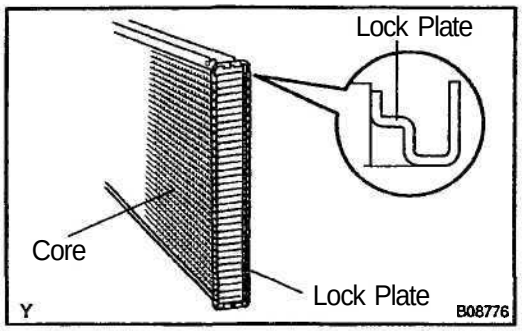

INSPECTION

DENSO Made:

INSPECT LOCK PLATE FOR DAMAGE

HINT:

- If the sides of the lock plate groove are deformed, reassembly of the tank will be impossible.
- Therefore, first correct any deformation with pliers or similar object. Water leakage will result if the bottom of the lock plate groove is damaged.

NOTICE:

The radiator can only be recaulked 2 times. After the 2nd time, the radiator core must be replaced.

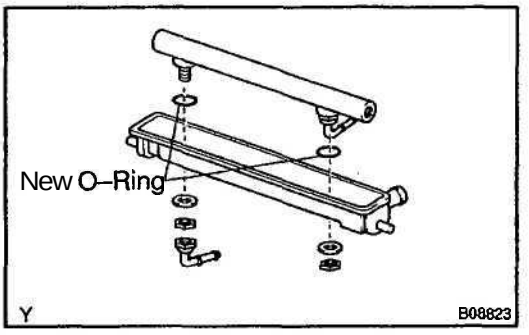

REASSEMBLY

1. **A/T (DENSO Made):**
   INSTALL OIL COOLER TO LOWER TANK

(a) Clean the O–ring contact surface of the lower tank and oil cooler.
(b) Install 2 new O–rings to the oil cooler.
(c) Install the oil cooler to the lower tank.
(d) Install the 2 plate washers and 2 nuts.
Torque: 8.34 N·m (85 kgf·cm, 74 in.·lbf)

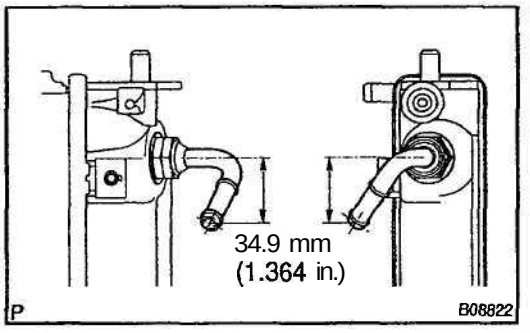

(e) Install the cooler pipe in the direction indicated as shown in the illustration.
Torque: 14.7 N·m (150 kgf·cm, 11 ft·lbf)

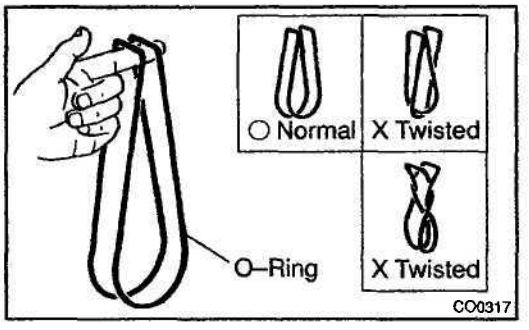

2. **DENSO Made:**
   INSTALL NEW O–RINGS AND TANKS

(a) After checking that there are no foreign objects in the lock plate groove, install the new O–ring without twisting it.

HINT:
When cleaning the lock plate groove, lightly rub it with sand paper without scratching it.

(b) Install the tank without damaging the O–ring.

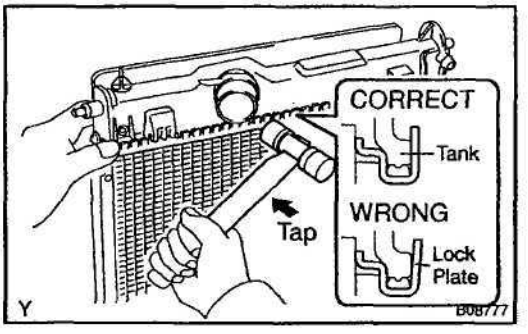

(c) Tap the lock prate with a soft-faced hammer so that there is no gap between it and the tank.

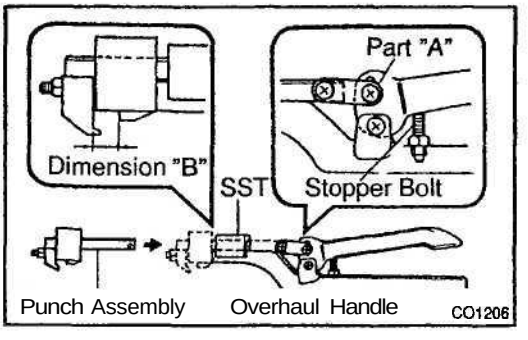

3. **DENSO Made:**
   ASSEMBLE SST
   SST 09230–01010, 09231–14010

(a) Install the punch assembly to the overhaul handle, inserting it in the hole in part "A" as shown in the illustration.
(b) While gripping the handle, adjust the stopper bolt so that dimension "B" is as shown in the illustration.
Dimension: 8.4 mm (0.331 in.)

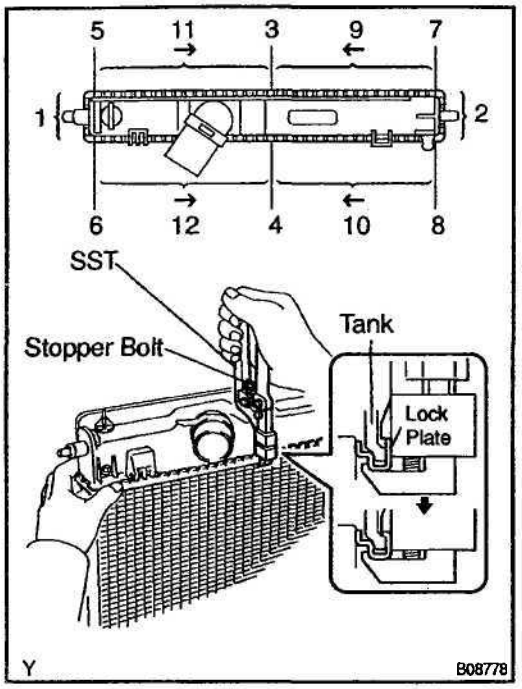

4. DENSO Made:
CAULK LOCK PLATE

(a) Lightly press SST against the lock plate in the order shown in the illustration. After repeating this a few times, fully caulk the lock plate by squeezing the handle until stopped by the stopped plate.
SST 09230–01010

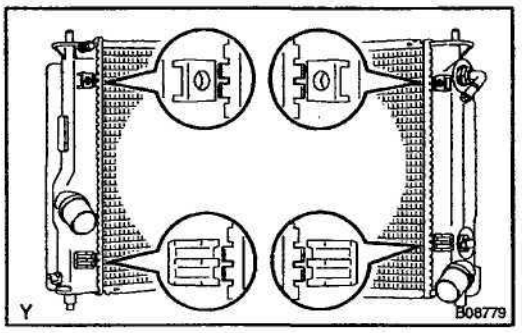

HINT:

- Do not stake the areas protruding around the pipes, brackets or tank rids.

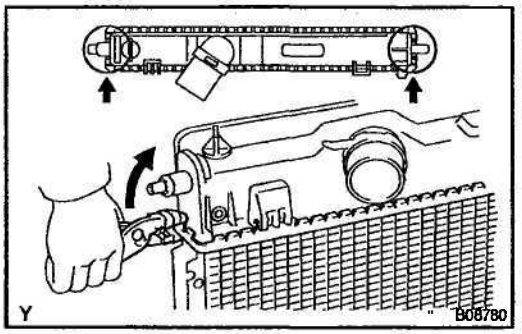

- The points shown in the illustration and oil cooler near here (A/T) cannot be staked with SST. Use wrap vinyl tape around the tip of a pair or similar object and be careful not to damage the core plates.

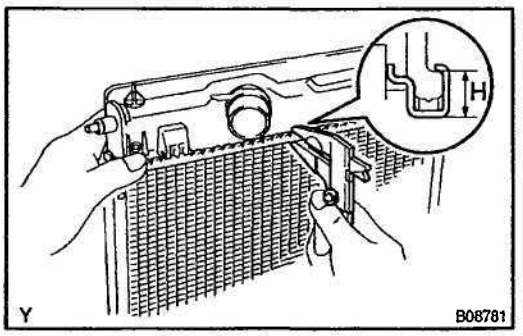

(b) Check the lock plate height (H) after completing the caulking.
Plate height: 7.40 - 7.80 mm (0.2913 - 0.3071 in.)

If not within the specified height, adjust the stopper bolt of the handle again and caulk again.

5. INSTALL DRAIN PLUG

(a) Install a new O–ring to the drain plug.
(b) Install the drain plug.

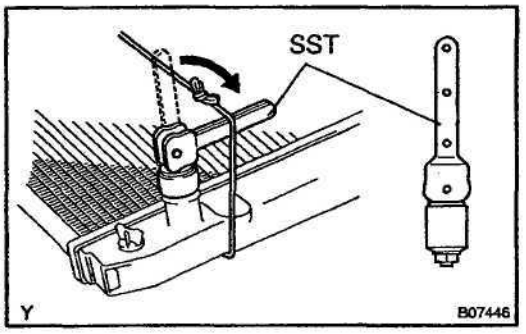

6. INSPECT FOR WATER LEAKS

(a) Tighten the drain plug.

(b) Install the engine coolant reservoir.

(c) Plug the inlet and outlet pipes of the radiator with SST.
SST 09230–01010

(d) Using a radiator cap tester, apply pressure to the radiator.
Test pressure: 177 kPa **(1.8 kgf/cm², 26 psi)**

(e) Submerge the radiator in water.

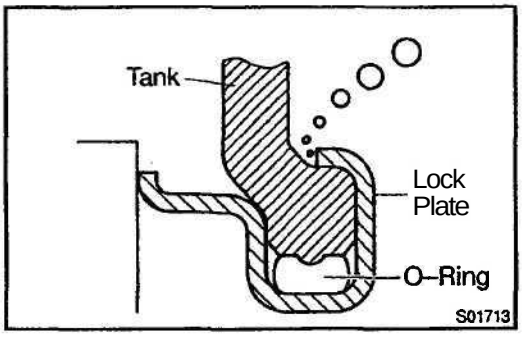

(f) Inspect for leaks.

HINT:

On radiators with resin tanks, there is a clearance between the tank and lock plate where a minute amount of air will remain, giving the appearance of an air leak when the radiator is submerged in water. therefore, before doing the water leak test, first swish the radiator around in the water until all bubbles disappear.

CO0X3-01

INSTALLATION

1. INSTALL ELECTRIC COOLING FAN TO RADIATOR

Install the cooling fan with the 2 bolts.

Torque: 5.0 N·m (51 kgf·cm, 44 in.·lbf)

2. INSTALL RADIATOR ASSEMBLY

(a) Install the 2 lower radiator support bushings.
(b) Install the radiator assembly.
(c) Install the 2 upper radiator support bushings.

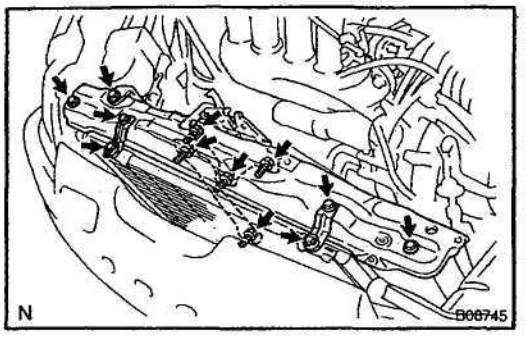

(d) Install the radiator upper support with the 2 bolts.
(e) w/ Cruise control system:
Install the cruise control actuator with the 3 bolts.
(f) Install the 2 condenser upper supports with the 2 bolts and nuts.
(g) Install the center brace with the 2 bolts.
(h) Install the hood lock with the 3 bolts.
(i) Connect the 2 A/T oil cooler hoses.
(j) Connect the lower radiator hose.
(k) Connect the upper radiator hose.
(l) Connect the No. 1 electric cooling fan connector.
(m) Connect the No. 2 electric cooling fan connector.

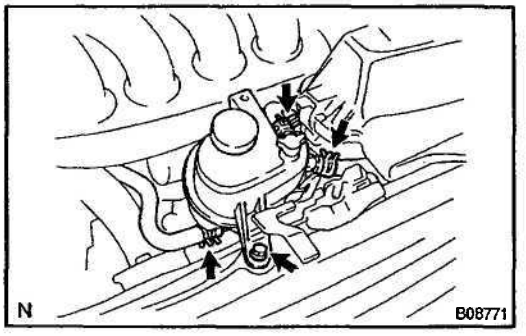

3. INSTALL ENGINE COOLANT RESERVOIR

(a) Install the engine coolant reservoir with the bolt.
Torque: 5.0 N·m (51 kgf·cm, 44 in.·lbf)
(b) Connect the 3 radiator reservoir hoses.

4. INSTALL AIR CLEANER

5. INSTALL BUMPER COVER (See page BO–4)

6. FILL WITH ENGINE COOLANT

7. INSTALL UPPER FRONT FENDER APRON SEAL AND UPPER RADIATOR SUPPORT SEAL

8. START ENGINE AND CHECK FOR COOLANT LEAKS

ELECTRIC COOLING FAN

ON–VEHICLE INSPECTION

CO0XD-01

1. CHECK COOLING FAN OPERATION WITH LOW TEMPERATURE (Below 83°C (181°F))

(a) Turn the ignition switch ON.

(b) Check that the cooling fan stops.

If not, check the cooling fan relay and ECT sensor, and check for a separated connector or severed wire between the cooling fan relay and ECT sensor.

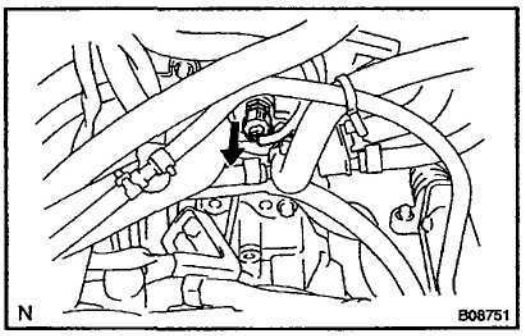

(c) Disconnect the ECT sensor connector.

(d) Check that the cooling fan rotates.

If not, check the engine main relay, cooling fan relay, cooling fan, fuses, and check for short circuit between the cooling fan relay and ECT sensor.

(e) Reconnect the ECT sensor connector.

2. CHECK COOLING FAN OPERATION WITH HIGH TEMPERATURE (Above 93°C (199°F))

(a) Start the engine, and raise coolant temperature to above 93°C (199°F).

(b) Check that the cooling fan rotates.

If not, replace the ECT sensor.

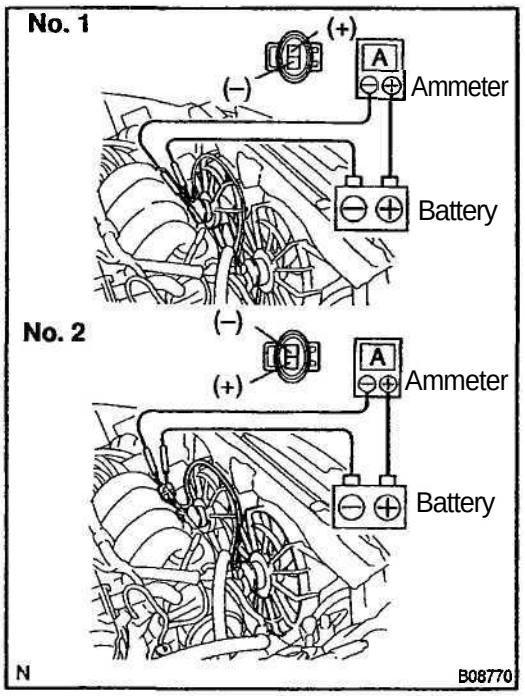

3. INSPECT COOLING FANS

(a) Disconnect the cooling fan connector.

(b) Connect battery and ammeter to the connector.

(c) Check that the cooling fan rotates smoothly, and check the reading on the ammeter.

Standard amperage: 5.2 - 8.2 A

(d) Reconnect the cooling fan connector.

CO04W-03

COMPONENTS

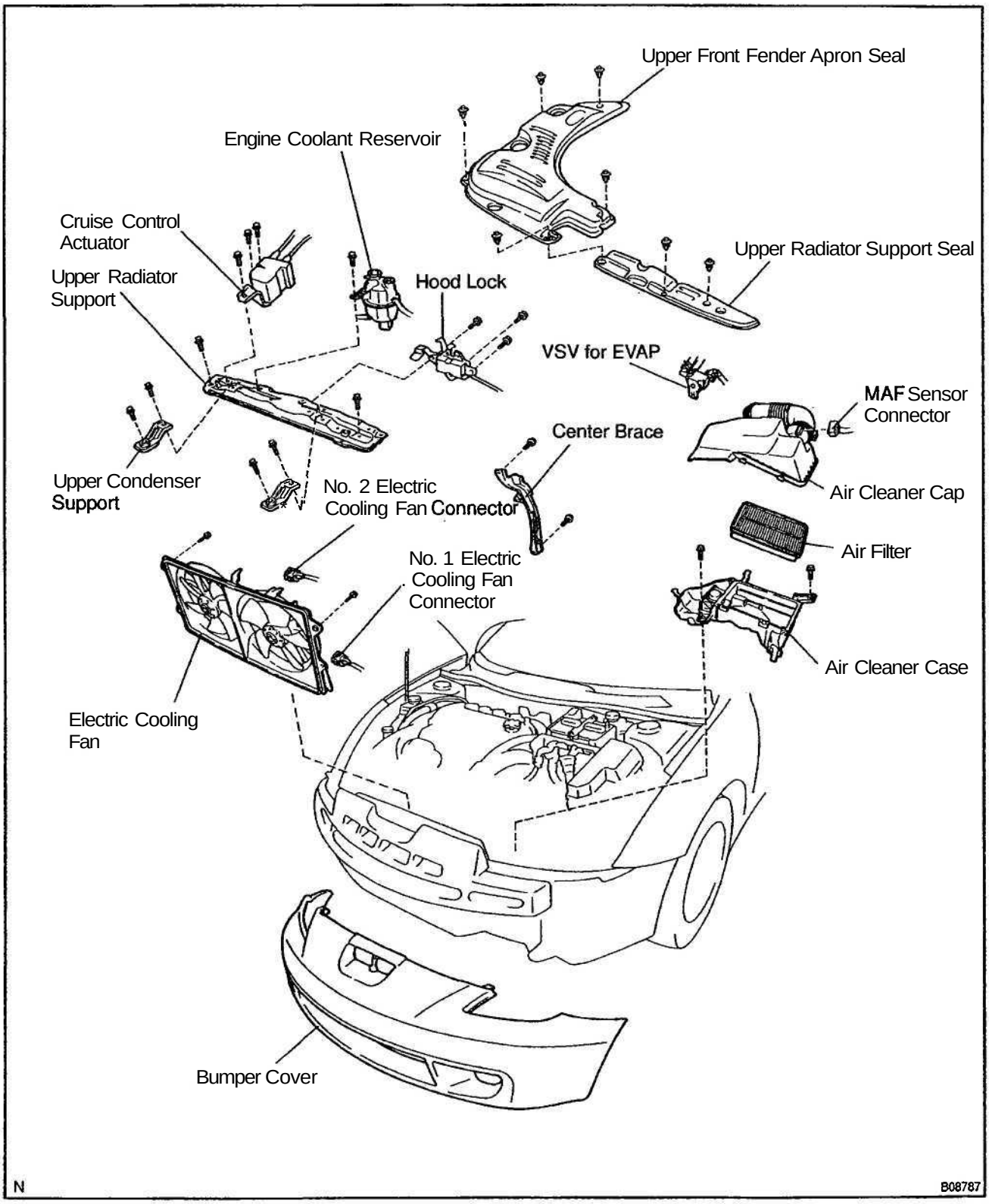

w/ A/C

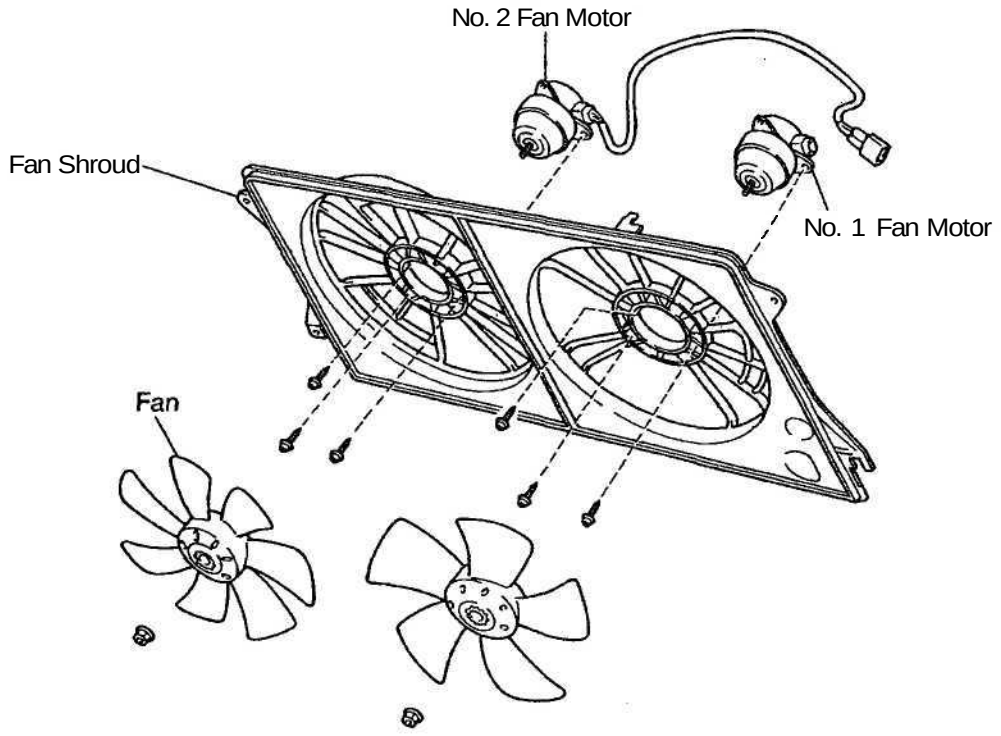

w/o A/C

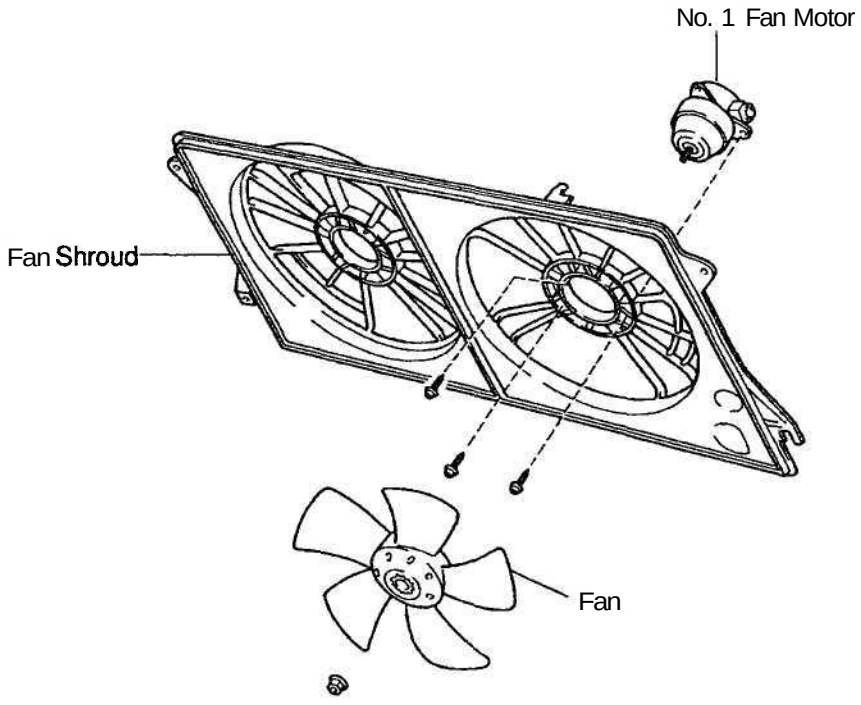

N

B08788

REMOVAL

1. REMOVE UPPER FRONT FENDER APRON SEAL AND UPPER RADIATOR SUPPORT SEAL

2. DRAIN ENGINE COOLANT

3. REMOVE BUMPER COVER (See page BO–4)

4. REMOVE RADIATOR UPPER SUPPORT

(a) Remove the air cleaner assembly.

(b) Remove the engine coolant reservoir.

(c) Remove the 3 bolts, and disconnect the hood lock.

(d) Remove the 2 bolts and center brace.

(e) Remove the 2 bolts, 2 nuts and 2 condenser upper supports.

(f) w/ Cruise control system:
Remove the bolt, and disconnect the cruise control actuator.

(g) Remove the 2 bolts and radiator upper support.

5. REMOVE COOLING FAN

(a) Disconnect the 2 cooling fan connectors.

(b) Remove the 2 bolts and cooling fan.

CO04Y-03

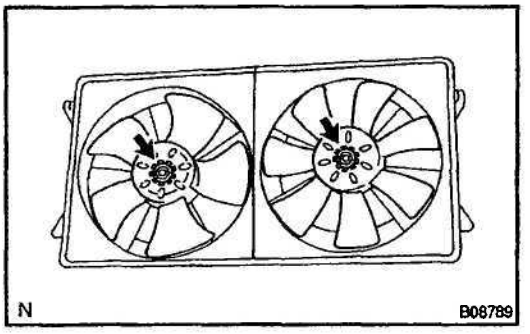

DISASSEMBLY

1. REMOVE FAN(S)

Remove the nut and fan.

2. **REMOVE FAN MOTOR(S)**

(a) Disconnect the wire and connector holder from the fan shroud.

(b) Remove the 3 screws and fan motor.

CO6X1-01

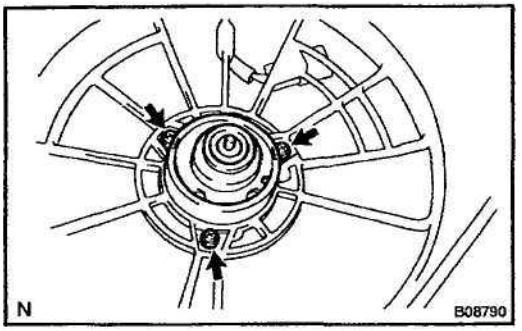

REASSEMBLY

1. INSTALL FAN MOTOR(S)

(a) Install the fan motor with the 3 screws.

Torque: 2.55 N·m (26 kgf·cm, 23 in.·lbf)

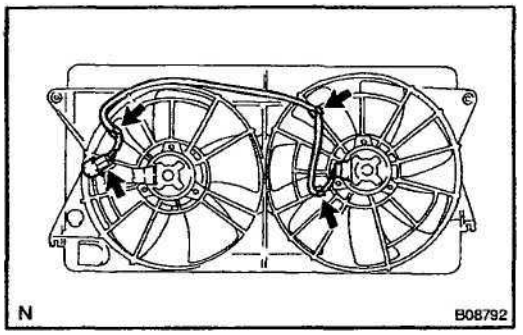

(b) Install the wire and connector holder to the fan shroud.

2. INSTALL FAN(S)

Install the fan with the nut.

Torque: 6.18 N·m (63 kgf·cm, 55 in.·lbf)

INSTALLATION

1. INSTALL COOLING FAN

(a) Install the cooling fan with the 2 bolts.
Torque: 5.0 N·m (51 kgf·cm, 44 in.·lbf)

(b) Connect the 2 cooling fan connectors.

2. INSTALL RADIATOR UPPER SUPPORT

(a) Install the radiator upper support with the 2 bolts.

(b) w/ Cruise control system:
Install the cruise control actuator with the 3 bolts.

(c) Install the 2 condenser upper supports with the 2 bolts and nuts.

(d) Install the center brace with the 2 bolts.

(e) Install the hood lock with the 3 bolts.

(f) Install the engine coolant reservoir.

(g) Install the air cleaner assembly.

3. INSTALL FRONT BUMPER (See page BO–4)

4. FILL WITH ENGINE COOLANT

5. INSTALL COOLING FAN

6. START ENGINE AND CHECK FOR COOLANT LEAKS

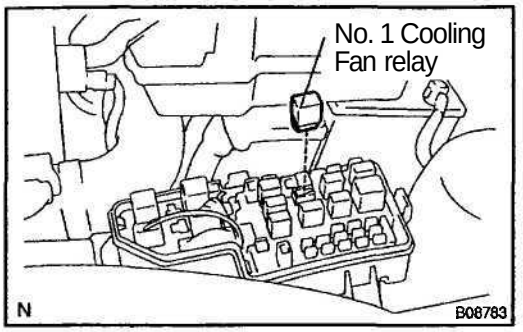

COOLING FAN RELAY INSPECTION

CO054-03

1. INSPECT NO. 1 COOLING FAN RELAY

(a) Remove the relay box cover.

(b) Remove the No. 1 cooling fan relay. (Marking: FAN No. 1)

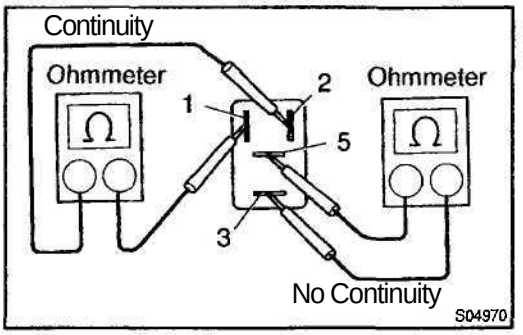

(c) Inspect the No. 1 cooling fan relay continuity.

(1) Using an ohmmeter, check that there is continuity between terminals 1 and 2.

If there is no continuity, replace the relay.

(2) Check that there is no continuity between terminals 3 and 5.

If there is continuity, replace the relay.

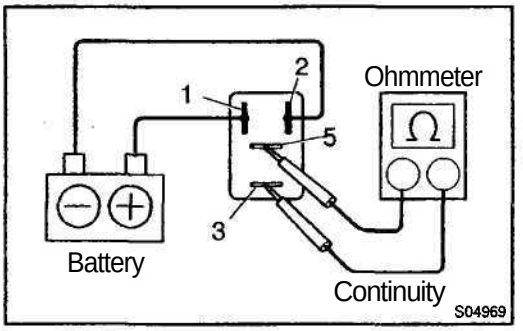

(d) Inspect the No. 1 cooling fan relay operation.

(1) Apply battery positive voltage across terminals 1 and 2.

(2) Using an ohmmeter, check that there is continuity between terminals 3 and 5.

If there is no continuity, replace the relay.

(e) Reinstall the No. 3 cooling fan relay.

(f) Reinstall the relay box cover.

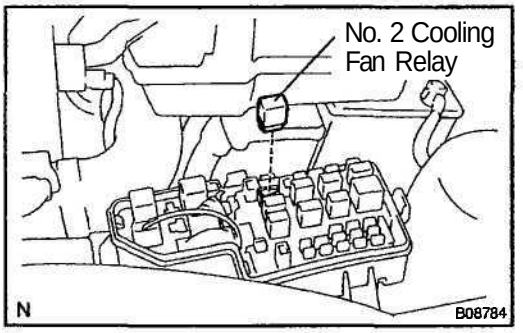

2. w/ A/C:

INSPECT NO. 2 COOLING FAN RELAY

(a) Remove the relay box cover.

(b) Remove the No. 2 cooling fan relay. (Marking: FAN No. 2)

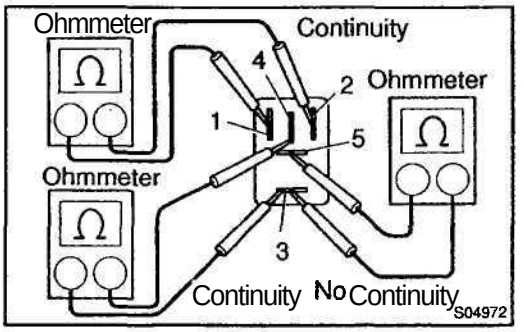

(c) Inspect the No. 2 cooling fan relay continuity.

(1) Using an ohmmeter, check that there is continuity between terminals 1 and 2.

If there is no continuity, replace the relay.

(2) Check that there is continuity between terminals 3 and 4.

If there is no continuity, replace the relay.

(3) Check that there is no continuity between terminals 3 and 5.

If there is continuity, replace the relay.

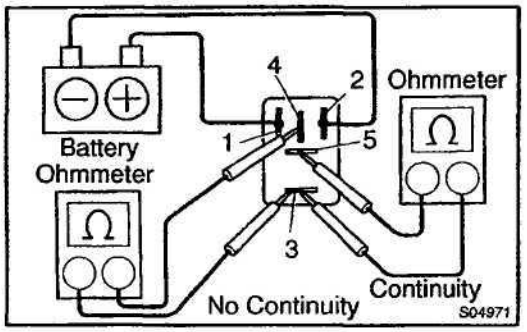

(d) Inspect the No. 2 cooling fan relay operation.
(1) Apply battery positive voltage across terminals 1 and 2.
(2) Using an ohmmeter, check that there is no continuity between terminals 3 and 4.

If there is continuity, replace the relay.

(3) Check that there is continuity between terminals 3 and 5.

If there is no continuity, replace the relay.

(e) Reinstall the No. 2 cooling fan relay.
(f) Reinstall the relay box cover.

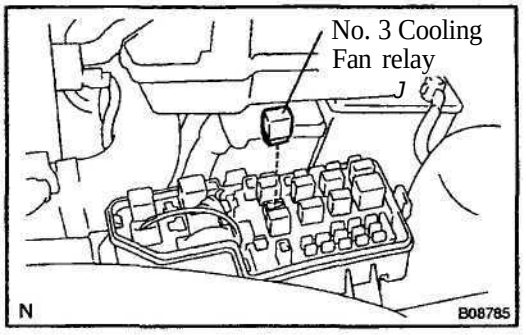

3. w/ A/C:

INSPECT NO. 3 COOLING FAN RELAY

(a) Remove the relay box cover.
(b) Remove the No. 3 cooling fan relay. (Marking: FAN No. 3)

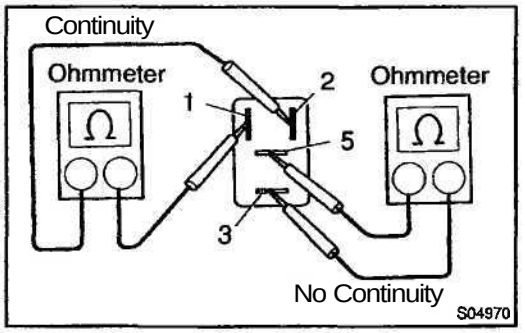

(c) Inspect the No. 3 cooling fan relay continuity.
(1) Using an ohmmeter, check that there is continuity between terminals 1 and 2.

If there is no continuity, replace the relay.

(2) Check that there is no continuity between terminals 3 and 5.

If there is continuity, replace the relay.

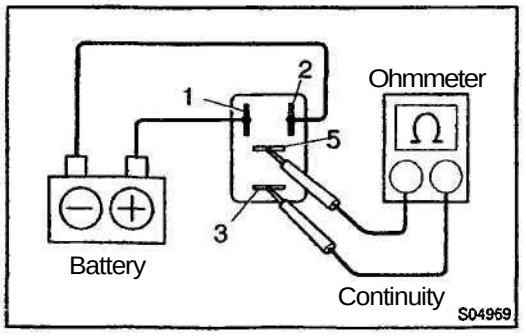

(d) Inspect the No. 3 cooling fan relay operation.
(1) Apply battery positive voltage across terminals 1 and 2.
(2) Using an ohmmeter, check that there is continuity between terminals 3 and 5.

If there is no continuity, replace the relay.

(e) Reinstall the No. 3 cooling fan relay.
(f) Reinstall the relay box cover.

LUBRICATION

OIL AND FILTER LU–1
OIL PUMP LU-5
OIL NOZZLE (2ZZ–GE) LU-14

LU

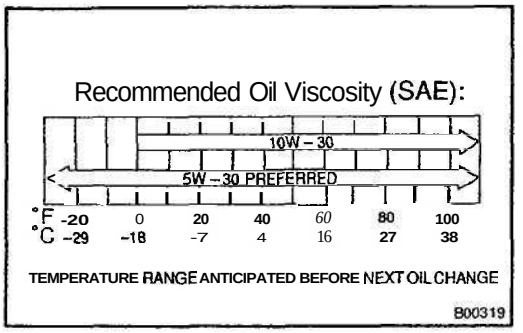

OIL AND FILTER

LU0N–01

INSPECTION

1. CHECK ENGINE OIL QUALITY

Check the oil for deterioration, entry of water, discoloring or thinning.

If the quality is visibly poor, replace the oil.

Oil grade:

API grade SJ, Energy–Conserving or ILSAC multigrade engine oil is recommended. SAE 5W-30 is the best choice for your vehicle, for good fuel economy, and good starting in cold weather.

2. CHECK ENGINE OIL LEVEL

After warming up the engine and then 5 minutes after the engine stop, oil level should be between the "L" and "F" marks on the dipstick.

If low. check for leakage and add oil up to the "F" mark.

NOTICE:

Do not fill with engine oil above the "F" mark.

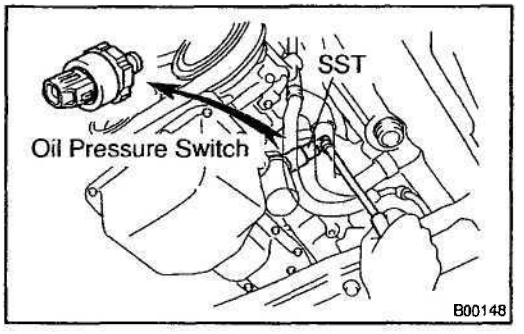

3. REMOVE OIL PRESSURE SWITCH, AND INSTALL OIL PRESSURE GAUGE

(a) Using SST, remove the oil pressure switch.
SST 09816–30010

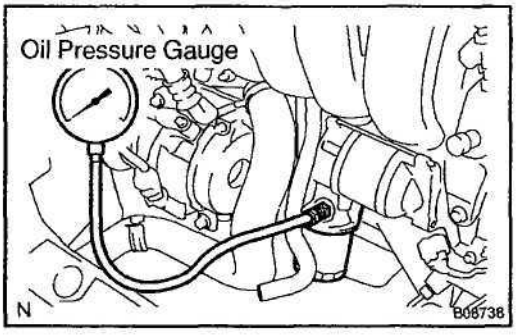

(b) Install the oil pressure gauge.

4. WARM UP ENGINE

Allow the engine to warm up to normal operating temperature.

5. CHECK OIL PRESSURE

Oil pressure:

At idle speed

1ZZ-FE 29 kPa (0.3 kgf/cm^2, 4.3 psi) or more

2ZZ–GE 39.2 kPa (0.4 kgf/cm^2, 5.7 psi) or more

At 3,000 rpm

294 - 539 kPa (3.0 - 5.5 kgf/cm^2, 43 - 78 psi)

6. REMOVE OIL PRESSURE GAUGE AND REINSTALL OIL PRESSURE SWITCH

(a) Remove the oil pressure gauge.

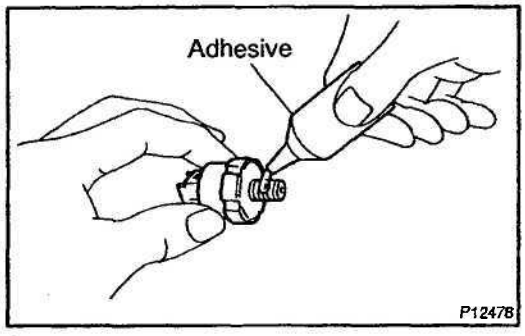

(b) Apply adhesive to 2 or 3 threads of the oil pressure switch.
Adhesive:
Part No. 08833–00080, THREE BOND 1344, LOCTITE 242 or equivalent

(c) Using SST, install the oil pressure switch.
SST 09816–30010
Torque: 13 N·m (130 kgf·cm, 9 ft·lbf)

7. START ENGINE AND CHECK FOR LEAKS

LU02L–02

REPLACEMENT

CAUTION:

- **Prolonged and repeated contact with mineral oil will result in the removal of natural fats from the skin, leading to dryness, irritation and dermatitis. In addition, used engine oil contains potentially harmful contaminants which may cause skin cancer.**
- **Exercise caution in order to minimize the length and frequency of contact of your skin to used oil. Wear protective clothing and gloves. Wash your skin thoroughly with soap and water, or use water–less hand cleaner, to remove any used engine oil. Do not use gasoline, thinners, or solvents.**
- **In order to preserve the environment, used oil and used oil filter must be disposed of only at designated disposal sites.**

1. REMOVE CENTER ENGIEN UNDER COVER

2. DRAIN ENGINE OIL

(a) Remove the oil filter cap.

(b) Remove the oil drain plug, and drain the oil into a container.

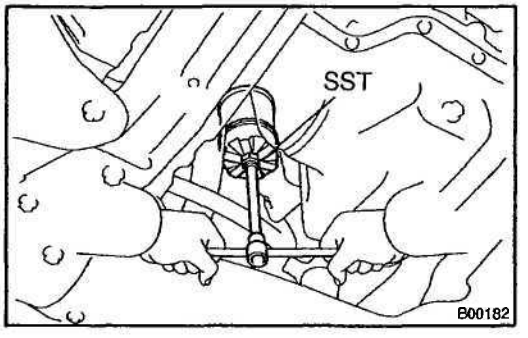

3. REPLACE OIL FILTER

(a) Using SST, remove the oil filter.
SST 09228–06501

(b) Check and clean the oil filter installation surface.

(c) Check the part number of the new oil filter is as same as old one.

(d) Apply clean engine oil to the gasket of a new oil filter.

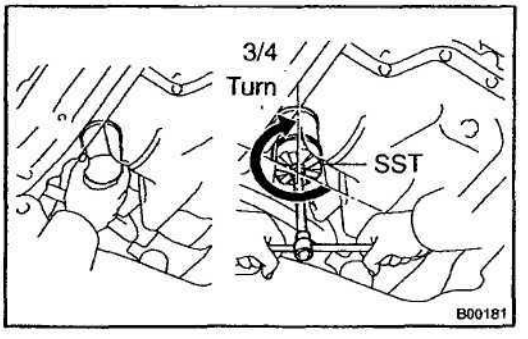

(e) Lightly screw the oil filter into place, and tighten it until the gasket contacts the seat.

(f) Using SST, tighten it an additional 3/4 turn.
SST 09228–06501

4. REFILL WITH ENGINE OIL

(a) Clean and install the oil drain plug with a new gasket.
Torque: 37 N·m (378 kgf·cm, 27 ft-lbf)

(b) Fill with fresh engine oil.

Capacity

1ZZ-FE

Drain and refill:

w/ Oil filter change: 3.7 liters (3.9 US qts, 3.3 Imp. qts)

w/o Oil filter change: 3.5 liters (3.7 US qts, 3.1 Imp. qts)

Dry fill: 4.1 liters (4.3 US qts, 3.6 Imp. qts)

2ZZ–GE

w/ Oil filter change: 4.4 liters (4.8 US qts, 4.0 Imp. qts)

w/o Oil filter change: 4.2 liters (4.6 US qts, 3.8 Imp. qts)

Dry fill: 5.2 liters (5.5 US qts, 4.6 Imp. ats)

(c) Install the oil filter cap.

5. START ENGINE AND CHECK FOR OIL LEAKS

6. INSTALL CENTER ENGINE UNDER COVER

7. RECHECK ENGINE OIL LEVEL

OIL PUMP

COMPONENTS

LU0IG-01

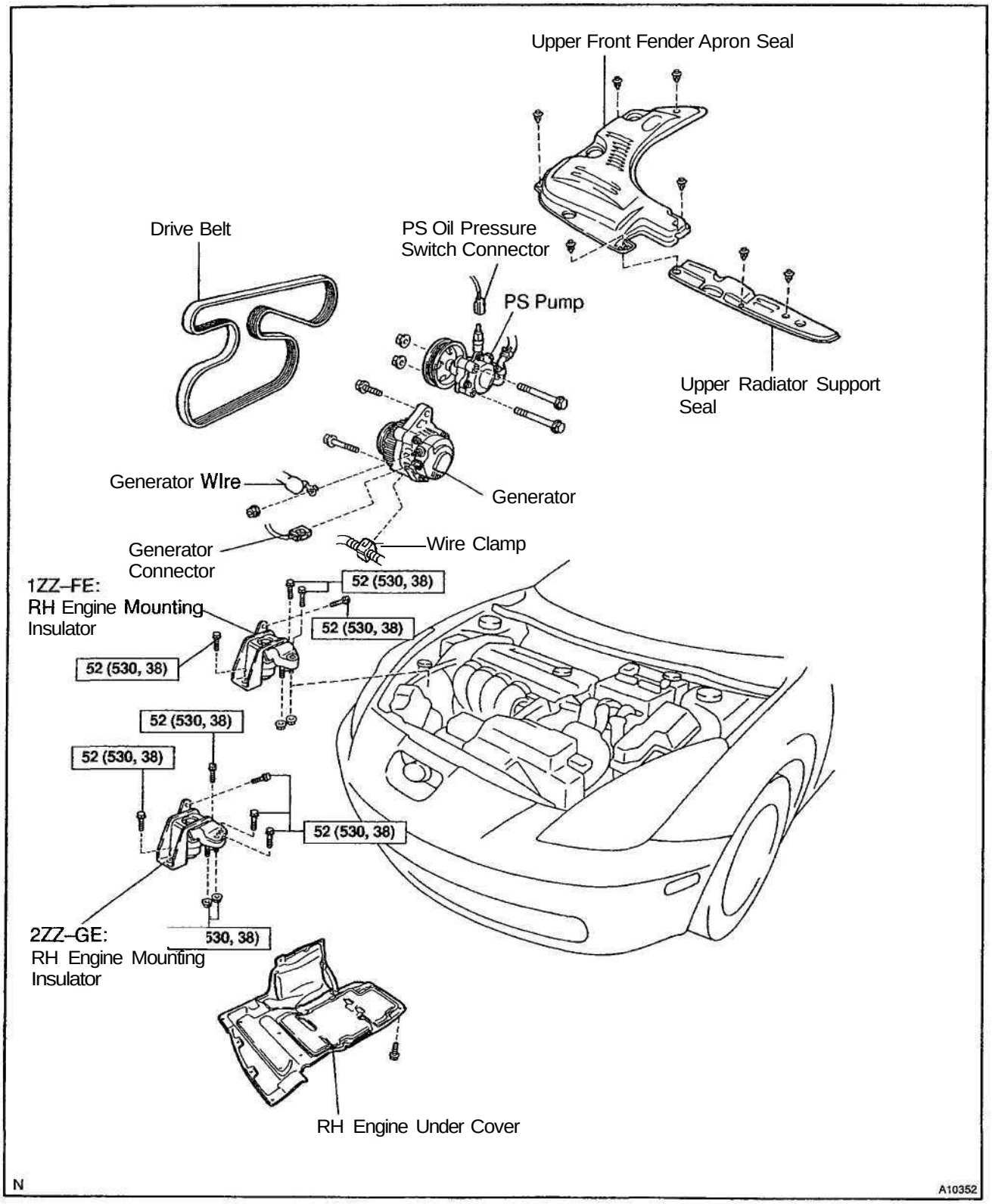

1ZZ-FE:

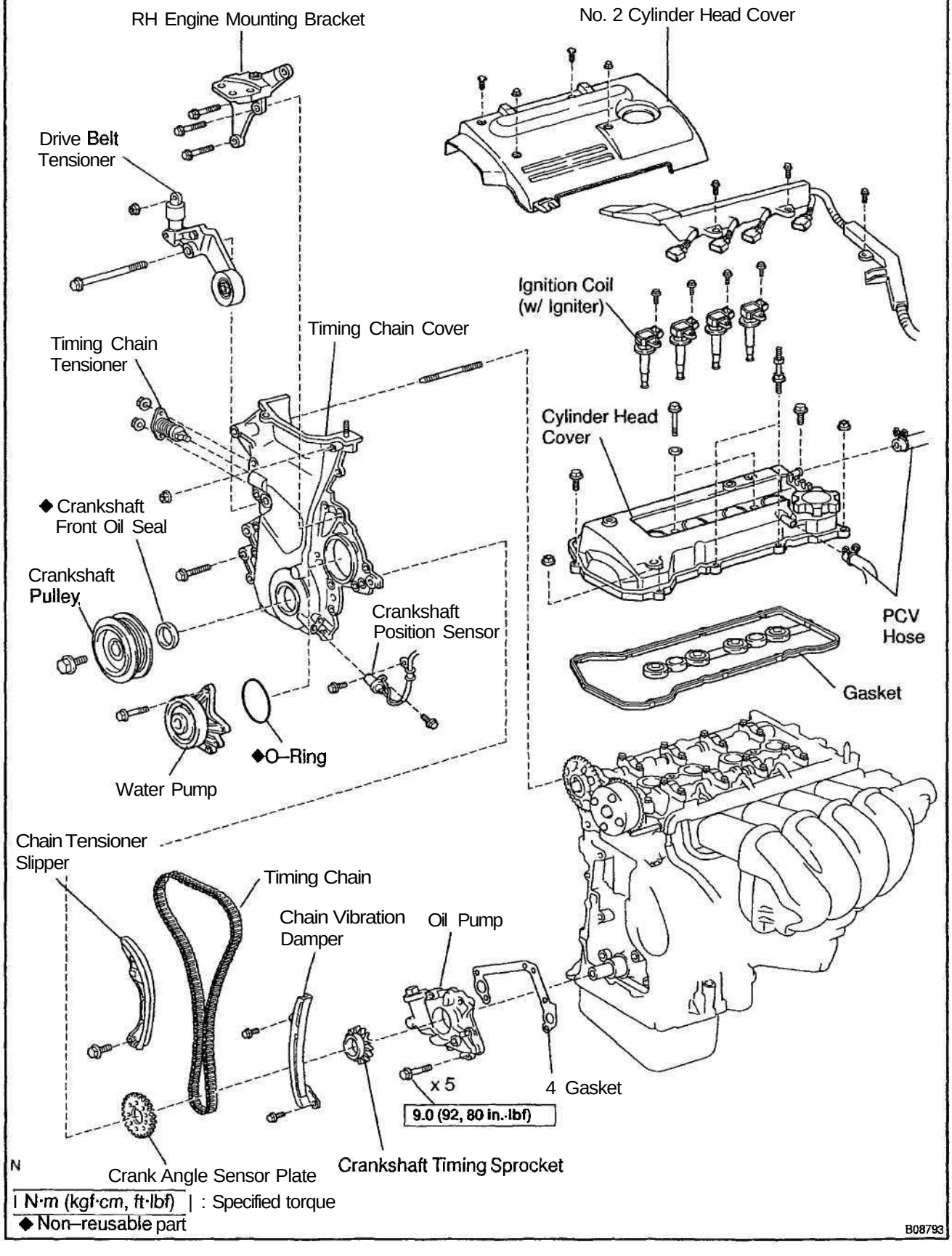
RH Engine Mounting Bracket
No. 2 Cylinder Head Cover
Drive Belt Tensioner
Ignition Coil (w/ Igniter)
Timing Chain Cover
Timing Chain Tensioner
Cylinder Head Cover
◆ Crankshaft Front Oil Seal
Crankshaft Pulley
Crankshaft Position Sensor
PCV Hose
Gasket
◆O–Ring
Water Pump
Chain Tensioner Slipper
Timing Chain
Chain Vibration Damper
Oil Pump
x 5
9.0 (92, 80 in.·lbf)
4 Gasket
Crank Angle Sensor Plate
Crankshaft Timing Sprocket
N
| N·m (kgf·cm, ft·lbf) | : Specified torque
◆ Non–reusable part
B08793

2ZZ–GE:

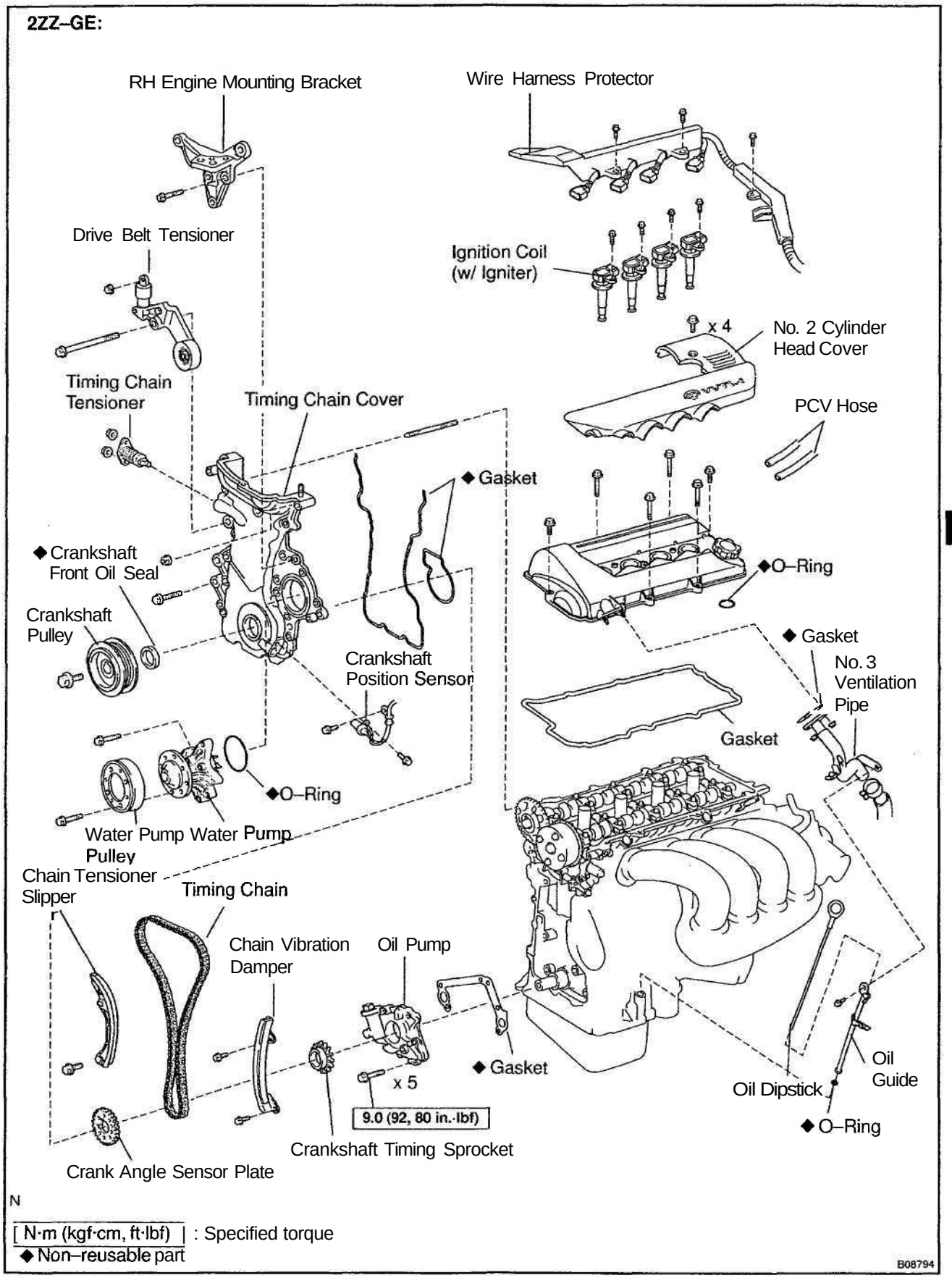

N

[N·m (kgf·cm, ft·lbf)] : Specified torque
◆ Non–reusable part

B08794

LU

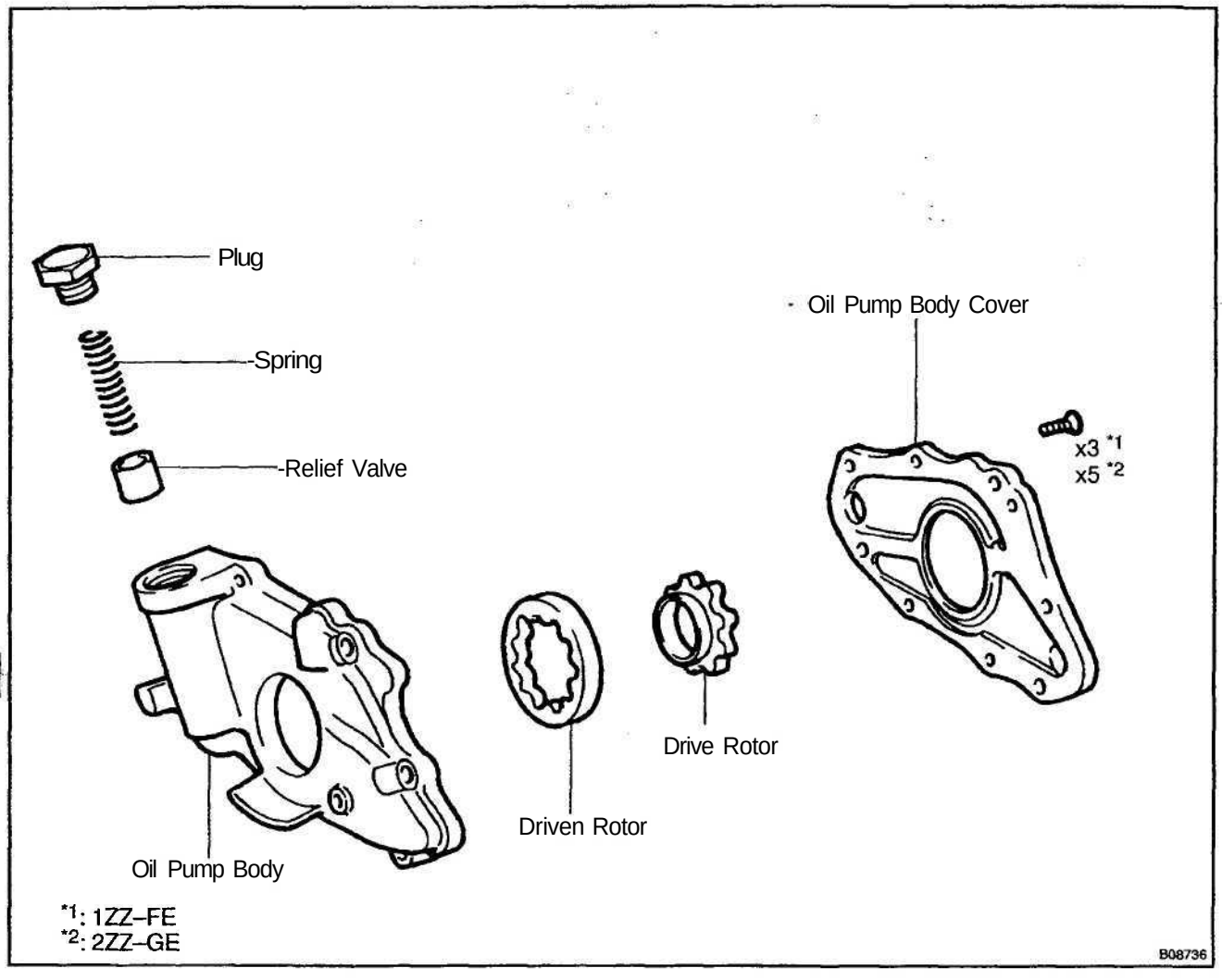
Plug
Spring
Relief Valve
Oil Pump Body Cover
x3 *1
x5 *2
Drive Rotor
Driven Rotor
Oil Pump Body
*1: 1ZZ–FE
*2: 2ZZ–GE
B08736

LU

LU02N-02

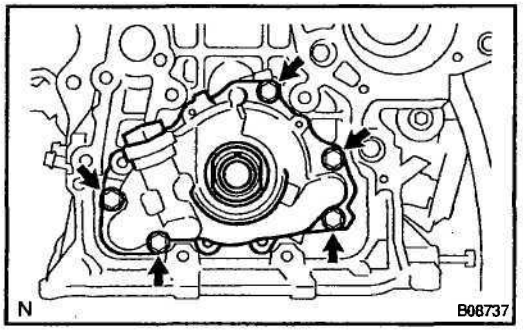

REMOVAL

1. **DRAIN ENGINE OIL**
2. **REMOVE TIMING CHAIN AND CRANKSHAFT TIMING SPROCKET (See pages EM–18)**
3. **REMOVE OIL PUMP**

Remove the 5 bolts, oil pump and gasket.

DISASSEMBLY

1. REMOVE RELIEF VALVE

Remove the plug, spring and relief valve.

2. REMOVE DRIVE AND DRIVEN ROTORS

(a) 1ZZ-FE:
Remove the 3 screws, pump body cover, drive and driven rotors.

(b) 2ZZ–GE:
Remove the 5 screws, pump body cover, drive and driven rotors.

LU02P-02

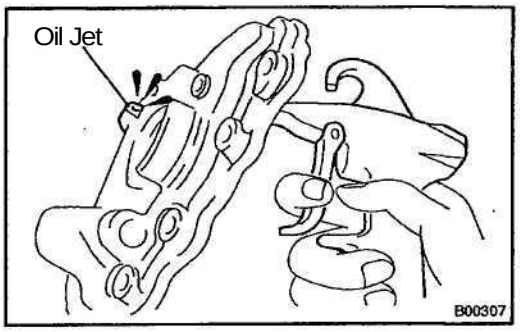

INSPECTION

1. INSPECT OIL JET

Check the oil jet for damage or clogging.
If necessary, replace the oil pump assembly.

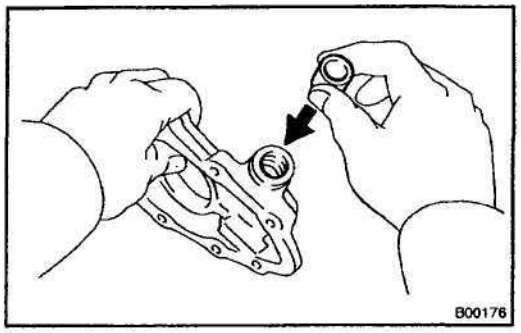

2. INSPECT RELIEF VALVE

Coat the valve with engine oil and check that it falls smoothly into the valve hole by its own weight.
If it does not, replace the relief valve. If necessary, replace the oil pump assembly.

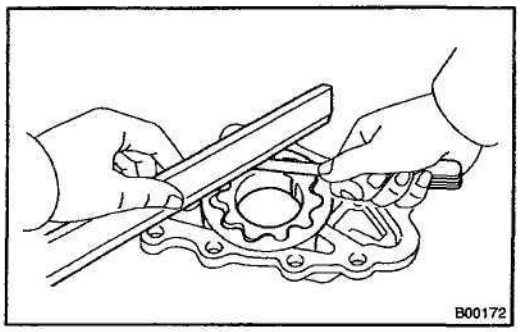

3. INSPECT ROTOR SIDE CLEARANCE

Using a feeler gauge and precision straight edge, measure the clearance between the rotors and precision straight edge.

Standard side clearance:
0.030 - 0.080 mm (0.0012 - 0.0031 in.)
Maximum side clearance:
0.16 mm (0.0062 in.)

If the side clearance is greater than maximum, replace the rotors as a set. If necessary, replace the oil pump assembly.

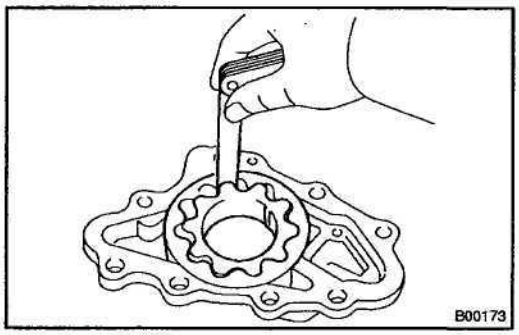

4. INSPECT ROTOR TIP CLEARANCE

Using a feeler gauge, measure the clearance between the drive and driven rotor tips.

Standard tip clearance:
0.060 - 0.180 mm (0.0024 - 0.0071 in.)
Maximum tip clearance:
0.35 mm (0.0138 in.)

If the tip clearance is greater than maximum, replace the rotors as a set.

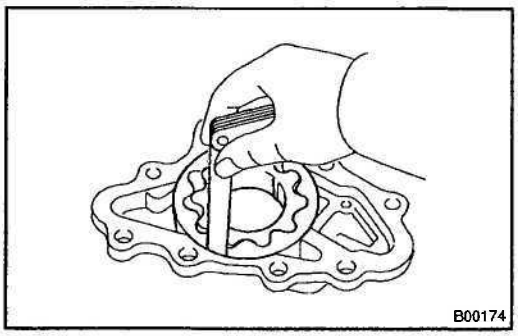

5. INSPECT ROTOR BODY CLEARANCE

Using a feeler gauge, measure the clearance between the driven rotor and body.

Standard body clearance:
0.125 - 0.180 mm (0.00492 - 0.00709 in.)
Maximum body clearance:
0.325 mm (0.01280 in.)

If the body clearance is greater than maximum, replace the rotors as a set. If necessary, replace the oil pump assembly.

LU02Q-02

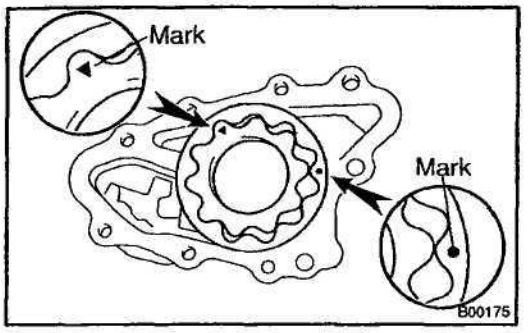

REASSEMBLY

1. INSTALL DRIVE AND DRIVEN ROTORS

(a) Place the drive and driven rotors into pump body with the marks facing the pump body cover side.

(b) 1ZZ-FE:
Install the pump body cover with the 3 screws.
Torque: 10.5 N-m (107 kgf·cm, 8 ft·lbf)

(c) 2ZZ–GE:
Install the pump body cover with the 5 screws.
Torque: 10.5 N·m (107 kgf·cm, 8 ft-lbf)

2. INSTALL RELIEF VALVE

Insert the relief valve and spring into the pump body hole, and install the plug.

Torque:
1ZZ–FE: 37 N·m (375 kgf·cm, 27 ft·lbf)
2ZZ–GE: 49 N-m (500 kgf·cm, 36 ft·lbf)

LU02R-02

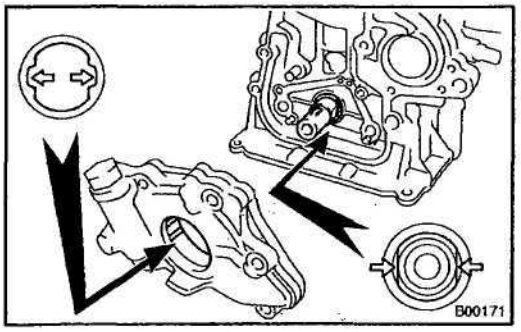

INSTALLATION

1. **INSTALL OIL PUMP**
(a) Place a new gasket on the cylinder block.
(b) Engage the spline teeth of the oil pump drive rotor with the large teeth of the crankshaft, and slide the oil pump.
(c) Install the oil pump with the 5 bolts.
Torque: 9.0 N·m (92 kgf·cm, 80 in.·lbf)
2. **INSTALL CRANKSHAFT TIMING SPROCKET AND TIMING CHAIN (See pages EM–25)**
3. **FILL ENGINE WITH OIL**
4. **START ENGINE AND CHECK FOR LEAKS**
5. **RECHECK ENGINE OIL LEVEL**

OIL NOZZLE (2ZZ-GE)

COMPONENTS

LU01H-01

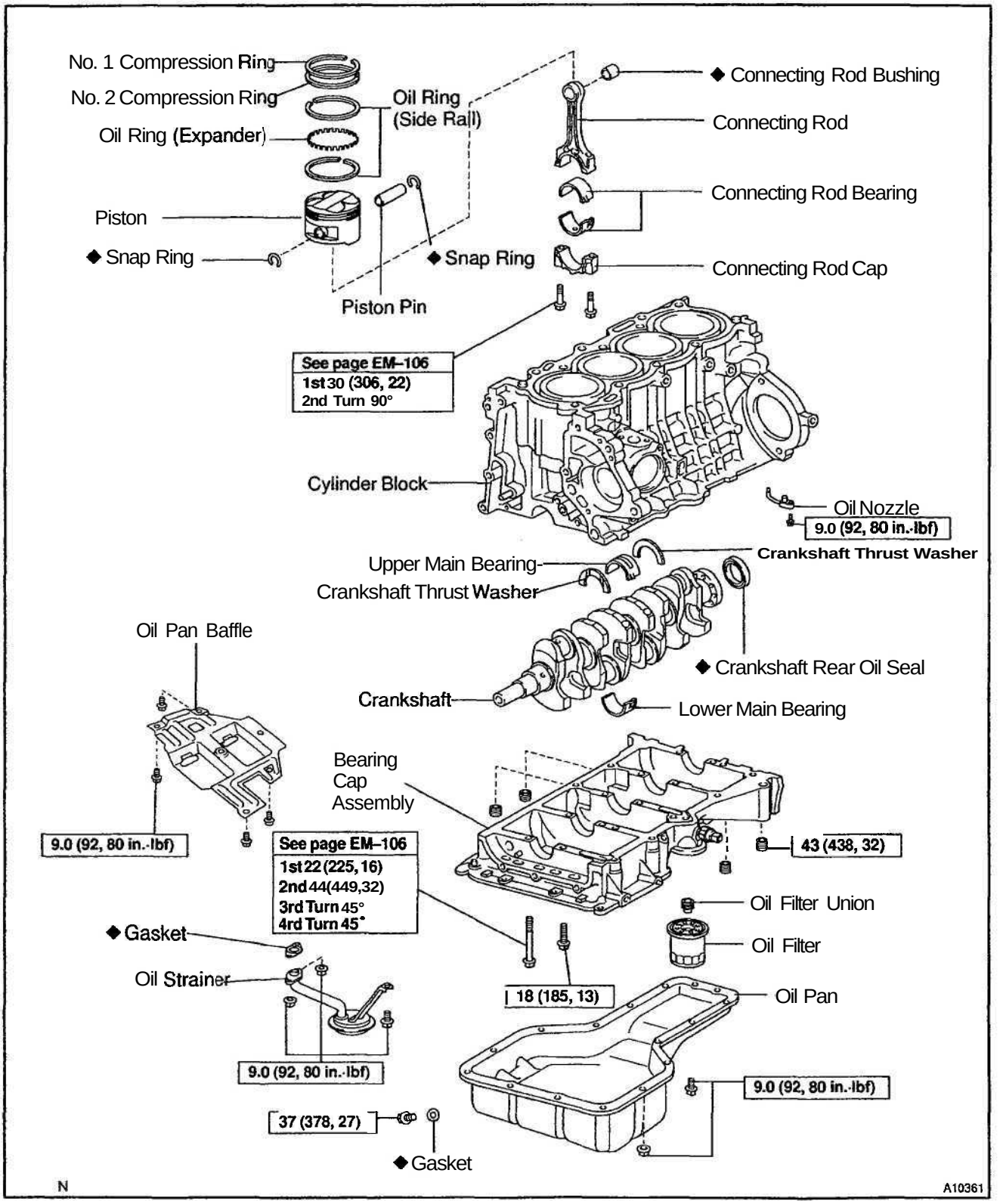

LU0ID-01

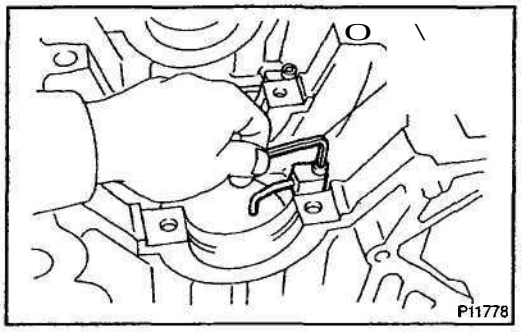

REMOVAL

1. **REMOVE CRANKSHAFT (See page EM–89)**
2. **REMOVE OIL NOZZLE (WITH RELIEF VALVE)**

Using a 5 mm hexagon wrench, remove the bolt and oil nozzle.

LU01E–01

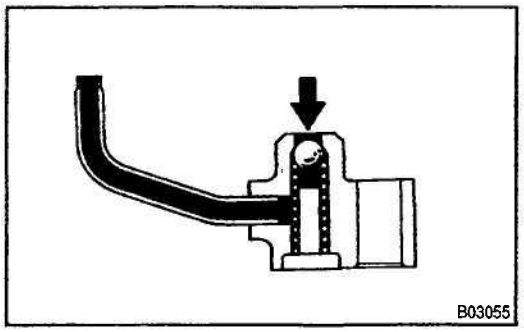

INSPECTION

INSPECT RELIEF VALVE (OIL NOZZLE)

Push the valve with a wooden stick to check if it is stuck.
If stuck, replace the relief valve.

LU01F–01

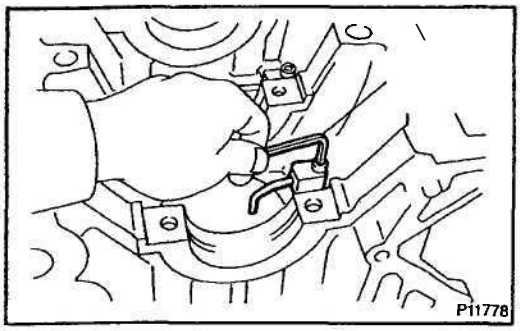

INSTALLATION

1. INSTALL OIL NOZZLE (WITH RELIEF VALVE)

Using a 5 mm hexagon wrench, install the oil nozzle with the bolt.

Torque: 9.0 N·m (92 kgf·cm, 80 in.·lbf)

2. INSTALL CRANKSHAFT (See page EM–106)

– MEMO –

IGNITION

IGNITION SYSTEM IG–1
IGNITION COIL IG–5
CAMSHAFT POSITION SENSOR IG–8
CRANKSHAFT POSITION SENSOR IG–11

IG

IGNITION SYSTEM

ON–VEHICLE INSPECTION

IG0FA–01

NOTICE:

"Cold" and "Hot" in these sentences express the temperature of the coils themselves. "Cold" is from -10°C (14°F) to 50°C (122°F) and "Hot" is from 50°C (122°F) to 100°C (212°F).

1. INSPECT IGNITION COIL (WITH IGNITER) AND SPARK TEST

Check that the spark occurs.

(1) Remove the ignition coils (with igniter).
(See page IG–6)

(2) Using a 16 mm (0.63 in.) plug wrench, remove the spark plugs.

(3) Install the spark plugs to each ignition coils (with igniter), and connect the ignition coil connectors.

(4) Disconnect the 4 injector connectors.

(5) Ground the spark plugs.

(6) Check if spark occurs while engine is being cranked.

NOTICE:

To prevent gasoline from being injected from injectors during this test, crank the engine for no more than 5 – 10 seconds at time.

If the spark does not occur, do the test as follows:

SPARK TEST

↓ NO

CHECK CONNECTION OF IGNITION COIL CONNECTOR → BAD → Connect securely.

↓ OK

CHANGE IT TO NORMAL IGNITION COIL (WITH IGNITER) AND PERFORM SPARK TEST AGAIN → OK → Replace the ignition coil (with igniter).

↓ NO

CHECK POWER SUPPLY TO IGNITION COIL (WITH IGNITER)
1. Turn ignition switch to ON.
2. Check that there is battery voltage at ignition coil positive (+) terminal.

→ BAD → Check wiring between ignition switch to ignition coil (with igniter).

↓ OK

CHECK RESISTANCE OF CAMSHAFT POSITION SENSOR (See step 3)

	Cold	Hot
Resistance:	835 – 1,400 Ω	1,060 – 1,645 ft

→ BAD → **Replace the camshaft position sensor.**

↓ OK

CHECK RESISTANCE OF CRANKSHAFT POSITION SENSOR (See step 4)

	Cold	Hot
Resistance:	1,630 – 2,740 Ω	2,065 – 3,225 a

→ BAD → **Replace the crankshaft position sensor.**

↓ OK

CHECK IGT SIGNAL FROM ECU (See page DI–114) → BAD → **Check wiring between ECU and ignition coil (with igniter), and then try another ECU.**

↓ OK

TRY ANOTHER IGNITION COIL (WITH IGNITER)

IG

(7) Using a 16 mm (0.63 in.) plug wrench, install the spark plugs.

Torque: 18 N·m (184 kgf·cm, 13 ft·lbf)

(8) Install the ignition coils (with igniter). (See page IG–7)

2. **INSPECT SPARK PLUGS**

(a) Remove the ignition coils (with igniter). (See page IG–6)

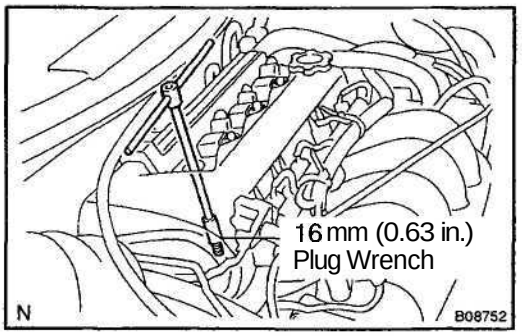

(b) Using a 16 mm (0.63 in.) plug wrench, remove the spark plugs.

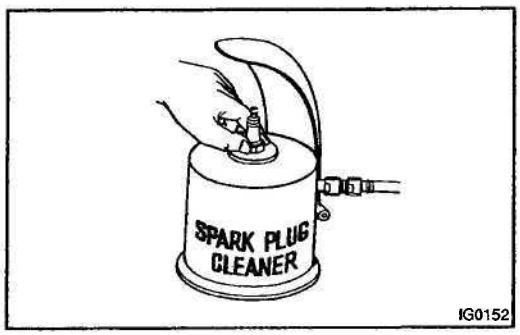

(c) Clean the spark plugs.

If the electrode has traces of wet carbon, allow it to dry and then clean with a spark plug cleaner.

Air pressure: Below 588 kPa (6 kgf/cm², 85 psi)

Duration: 20 seconds or less

HINT:

If there are traces of oil, remove it with gasoline before using the spark plug cleaner.

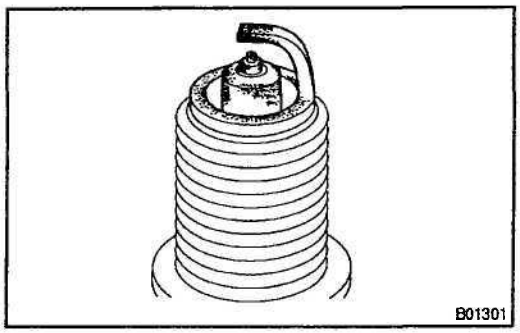

(d) Check the spark plug for thread damage and insulator damage.

If abnormal, replace the spark plug.

Recommended spark plug:

1ZZ-FE:

DENSO made	SK16R11
NGK made	IFR5A11

2ZZ-GE:

DENSO made	SK20R11
NGK made	IFR6A11

IG

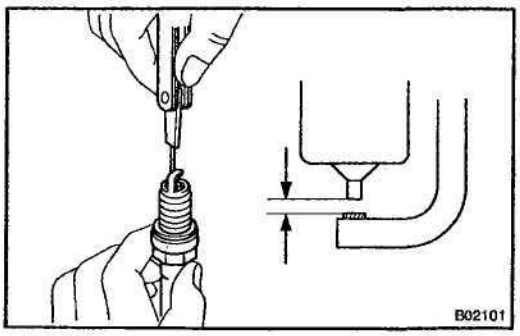

(e) Adjust electrode gap.

Carefully bend the outer electrode to obtain the correct electrode gap.

Electrode gap: 1.1 mm (0.043 in.)

(f) Using a 16 mm (0.63 in.) plug wrench, install the spark plugs.

Torque: 18 N m (184 kgf-cm, 13 ft·lbf)

(g) Install the ignition coils (with igniter).

(See page IG–7)

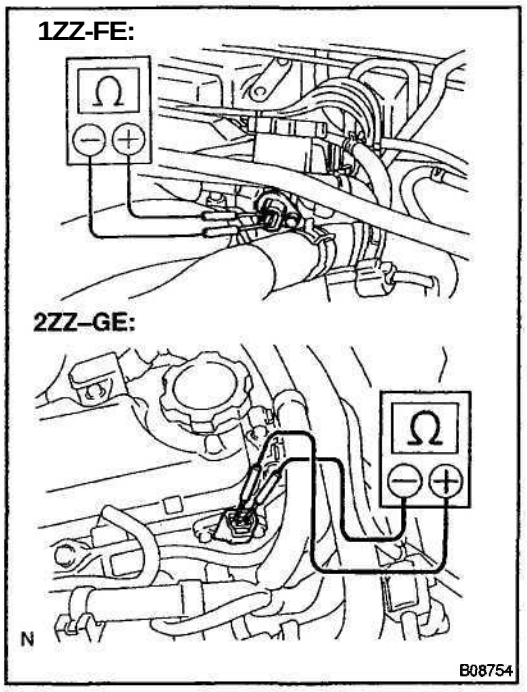

3. INSPECT CAMSHAFT POSITION SENSOR

(a) Disconnect the camshaft position sensor connector.

(b) Using an ohmmeter, measure the resistance between terminals.

Resistance:

Cold	835 – 1,400 Ω
Hot	1,060 – 1,645 Ω

If the resistance is not as specified, replace the camshaft position sensor.

(c) Connect the camshaft position sensor connector.

IG

IGNITION COIL

COMPONENTS

IG0BO-03

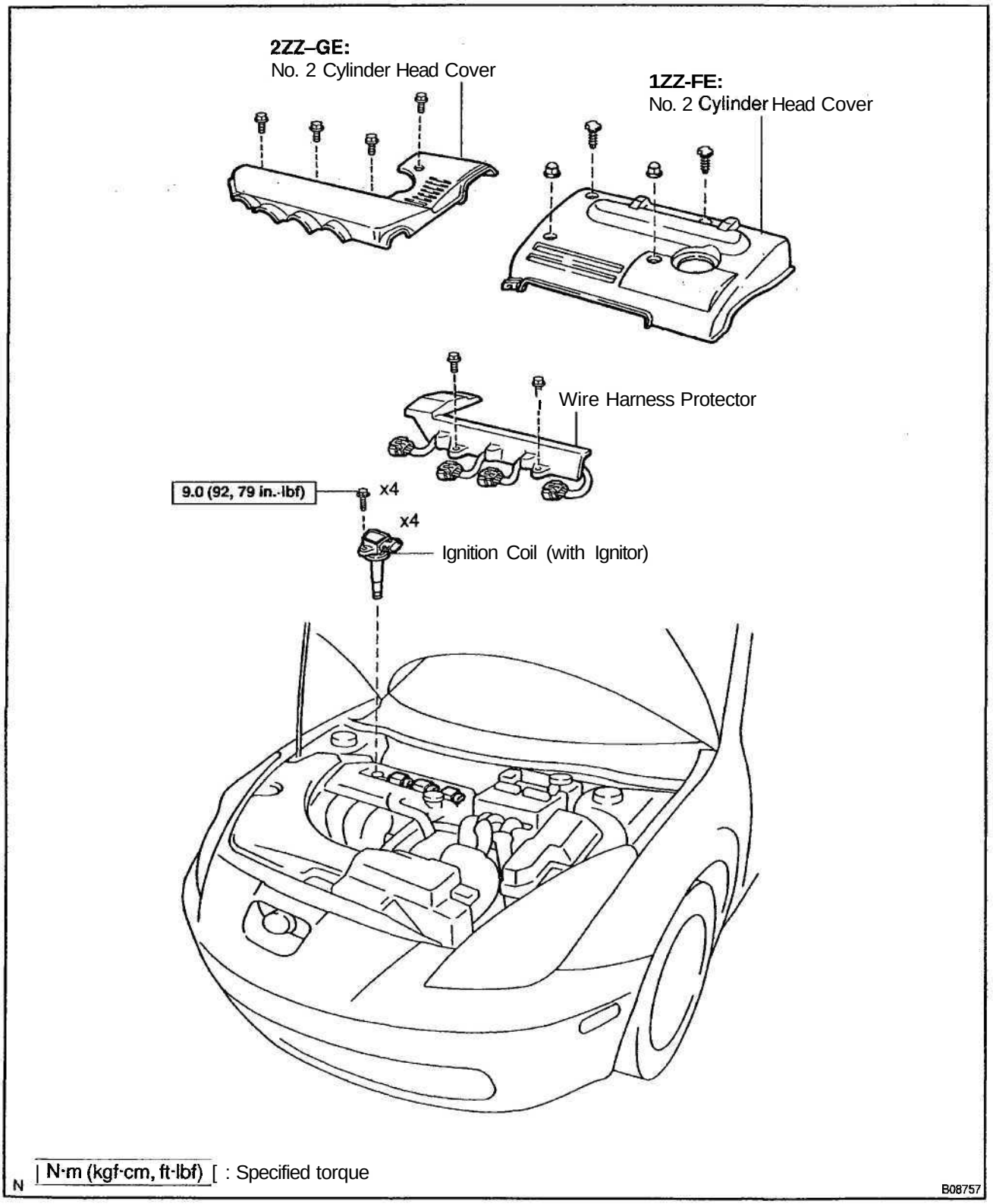

IG

IG0EP-03

REMOVAL

1. REMOVE NO. 2 CYLINDER HEAD COVER

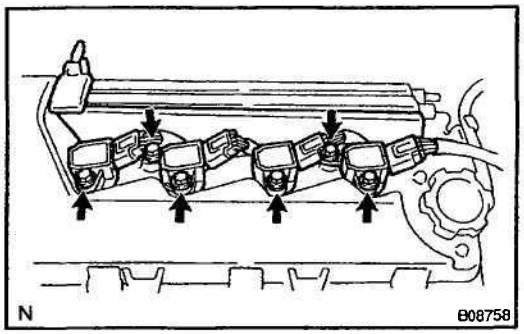

2. REMOVE IGNITION COILS (WITH IGNITER) FROM SPARK PLUGS

(a) Remove the 2 bolts and disconnect the wire harness protector.

(b) Disconnect the 4 ignition coil connectors.

(c) Remove the 4 bolts and pull out the 4 ignition coils (with igniter).

Torque: 9.0 N-m (92 kgf-cm, 79 in.-lbf)

IG0BQ-02

INSTALLATION

Installation is in the reverse order of removal (See page **IG–6**).

CAMSHAFT POSITION SENSOR

COMPONENTS

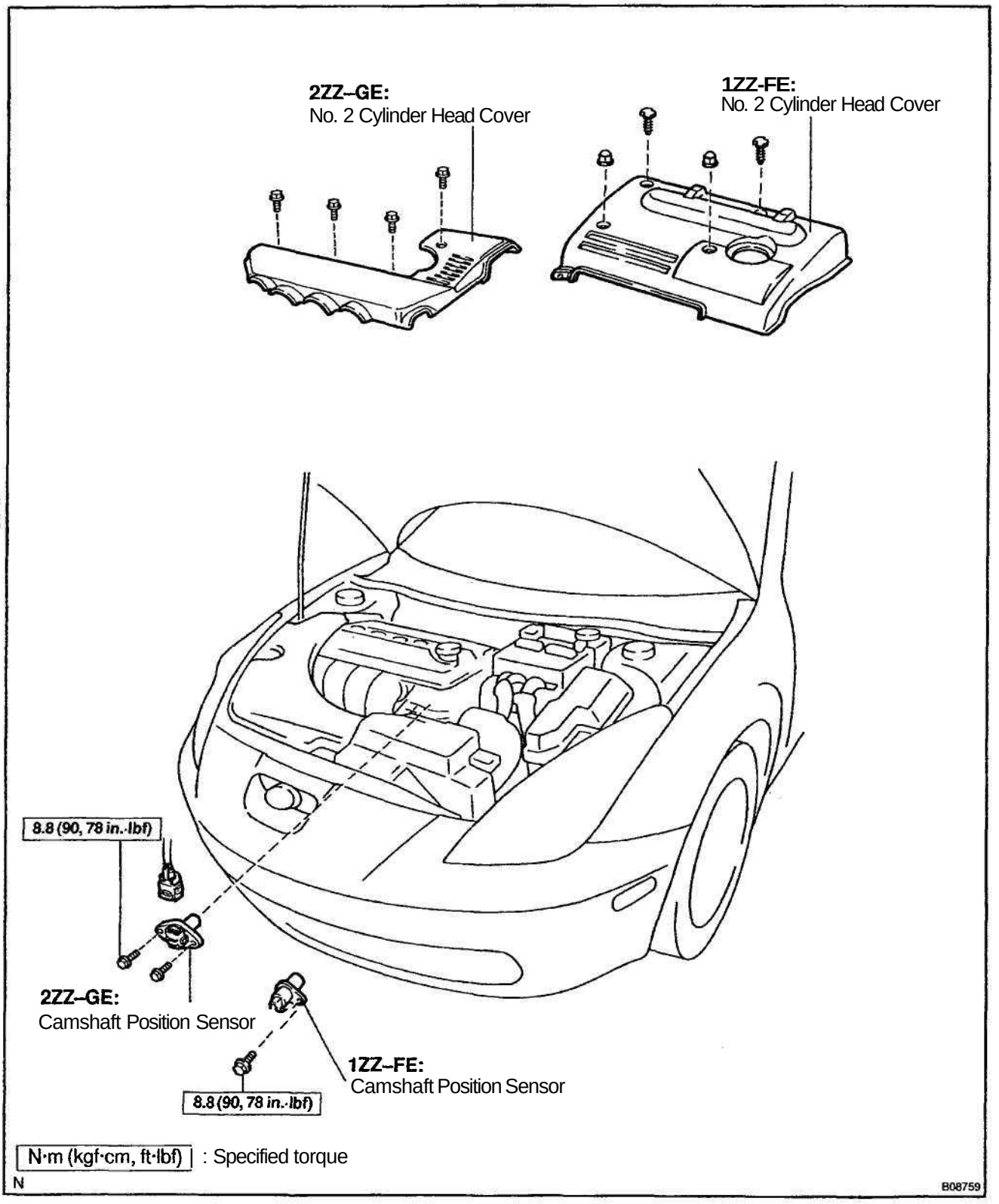

IG0F6-01

REMOVAL

1. REMOVE NO. 2 CYLINDER HEAD COVER

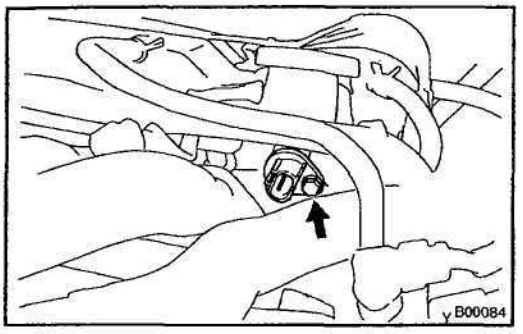

2. **1ZZ-FE:**

REMOVE CAMSHAFT POSITION SENSOR

(a) Disconnect the connector.

(b) Remove the bolt and camshaft position sensor.

Torque: 8.8 N·m (90 kgf·cm, 78 in.·lbf)

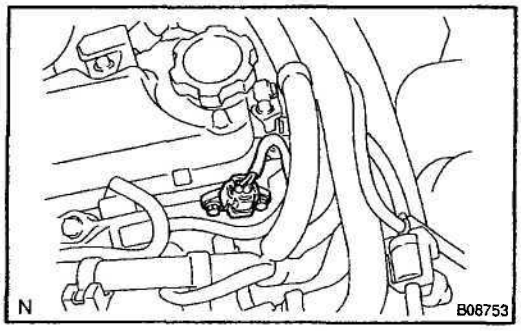

3. **2ZZ–GE:**

REMOVE CAMSHAFT POSITION SENSOR

(a) Disconnect the connector.

(b) Remove the 2 bolts and camshaft position sensor.

Torque: 8.8 N·m (90 kgf·cm, 78 in.·lbf)

IG

INSTALLATION

Installation is in the reverse order of removal (See page IG–9).

CRANKSHAFT POSITION SENSOR

COMPONENTS

IGOF9-01

1ZZ-FE:

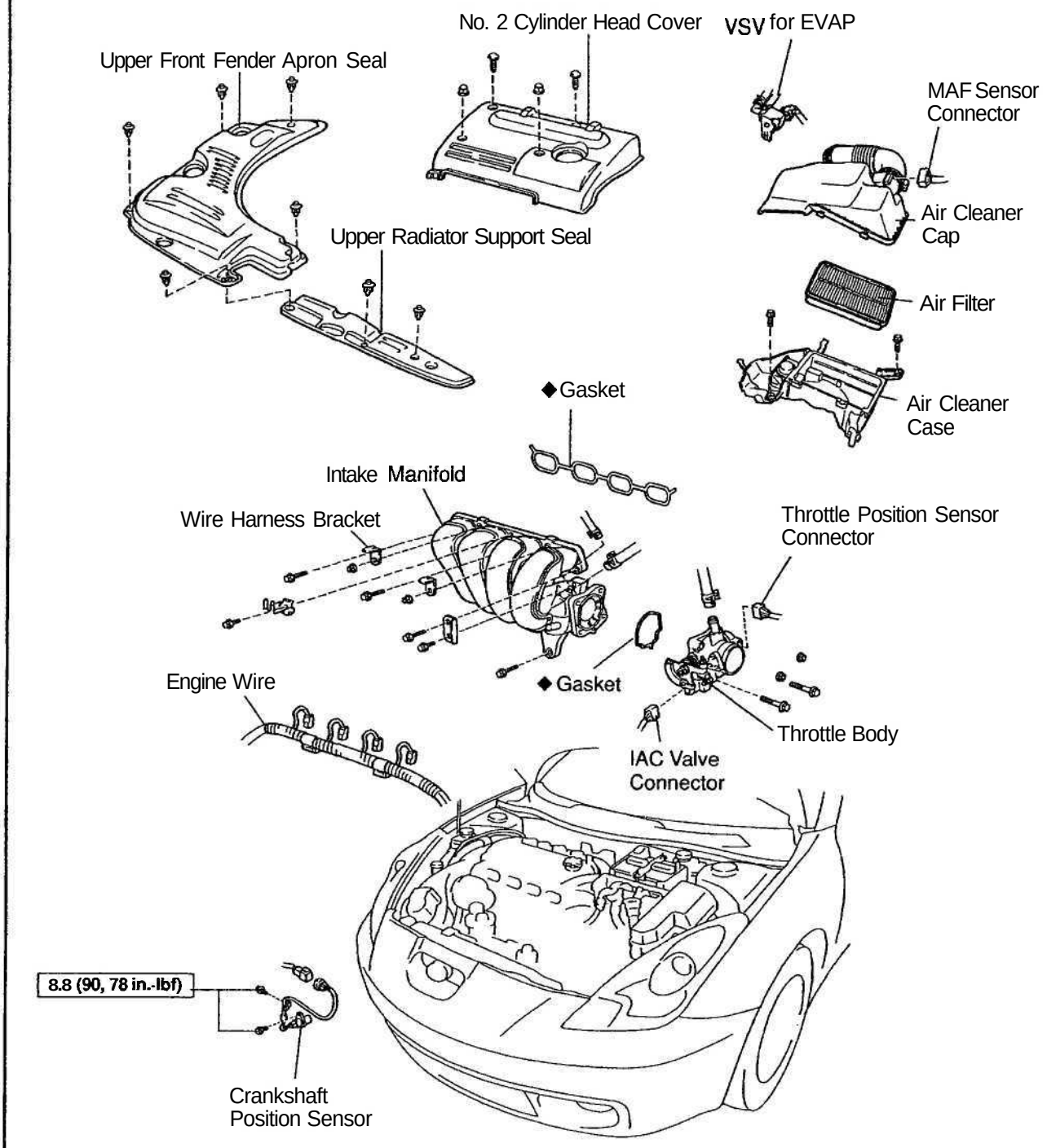

N·m (kgf·cm, ft·lbf) : Specified torque

N ◆ Non–reusable part

B08804

2ZZ–GE:

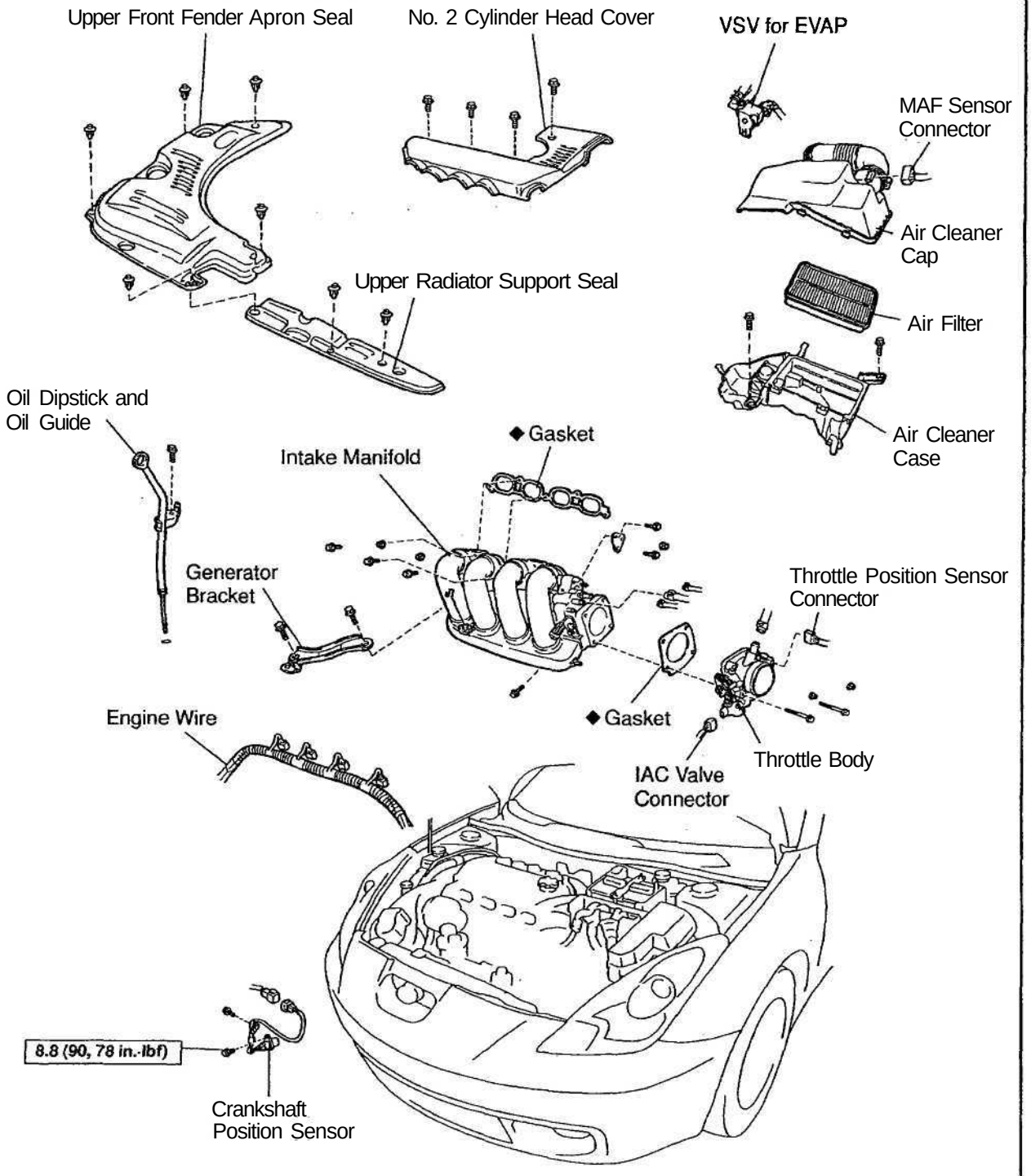

N

N·m (kgf·cm, ft·lbf) : Specified torque

◆ Non-reusable part

B09366

REMOVAL

1. **REMOVE INTAKE MANIFOLD (See page EM–42)**
2. **REMOVE ENGINE UNDER COVER RH**

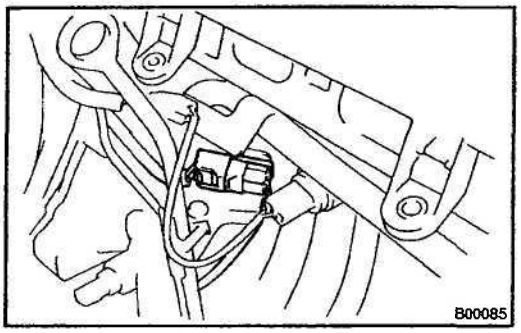

3. **REMOVE CRANKSHAFT POSITION SENSOR**

(a) Disconnect the crankshaft position sensor connector.

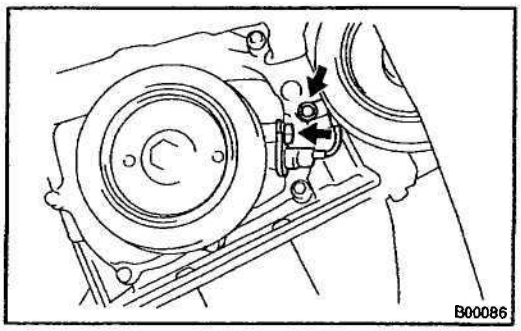

(b) Remove the 2 bolt and crankshaft position sensor.
Torque: 8.8 N·m (90 kgf·cm, 78 in.·lbf)

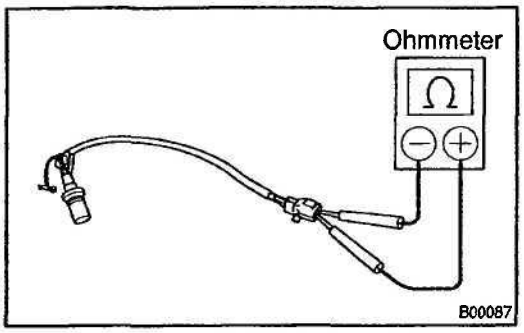

INSPECTION

NOTICE:

"Cold" and "Hot" in these sentences express the temperature of the sensor itself. "Cold" is from –10°C (14°F) to 50°C (122°F) and "Hot" is from 50°C (122°F) to 100°C (212°F).

INSPECT CRANKSHAFT POSITION SENSOR RESISTANCE

Using an ohmmeter, measure the resistance between terminals.

Resistance:

Cold: 1,630 – 2,740 a

Hot: 2,065 – 3,225 Ω

If the resistance is not as specified, replace the crankshaft position sensor.

INSTALLATION

Installation is in the reverse order of removal (See page **IG–13).**

– MEMO –

STARTING

STARTING SYSTEM. ST–1
STARTER. ST-2
STARTER RELAY. ST–17

ST

STARTING SYSTEM

ON–VEHICLE INSPECTION

ST02L–01

NOTICE:

Before changing the starter, check these items again:

- **Connector connection**
- **Accessory installation, e.g.:theft deterrent system**

STARTER

COMPONENTS

ST02M-03

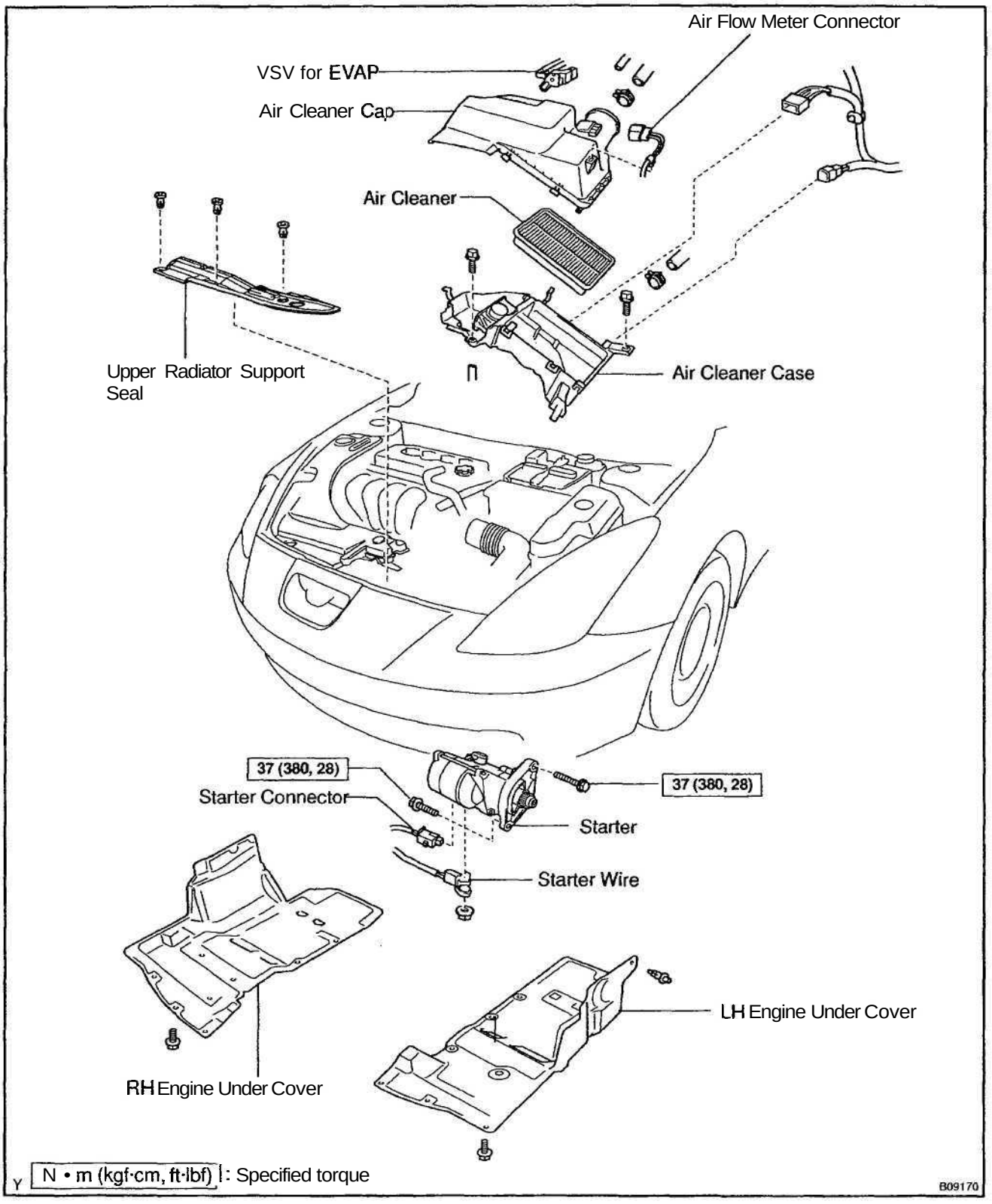

ST

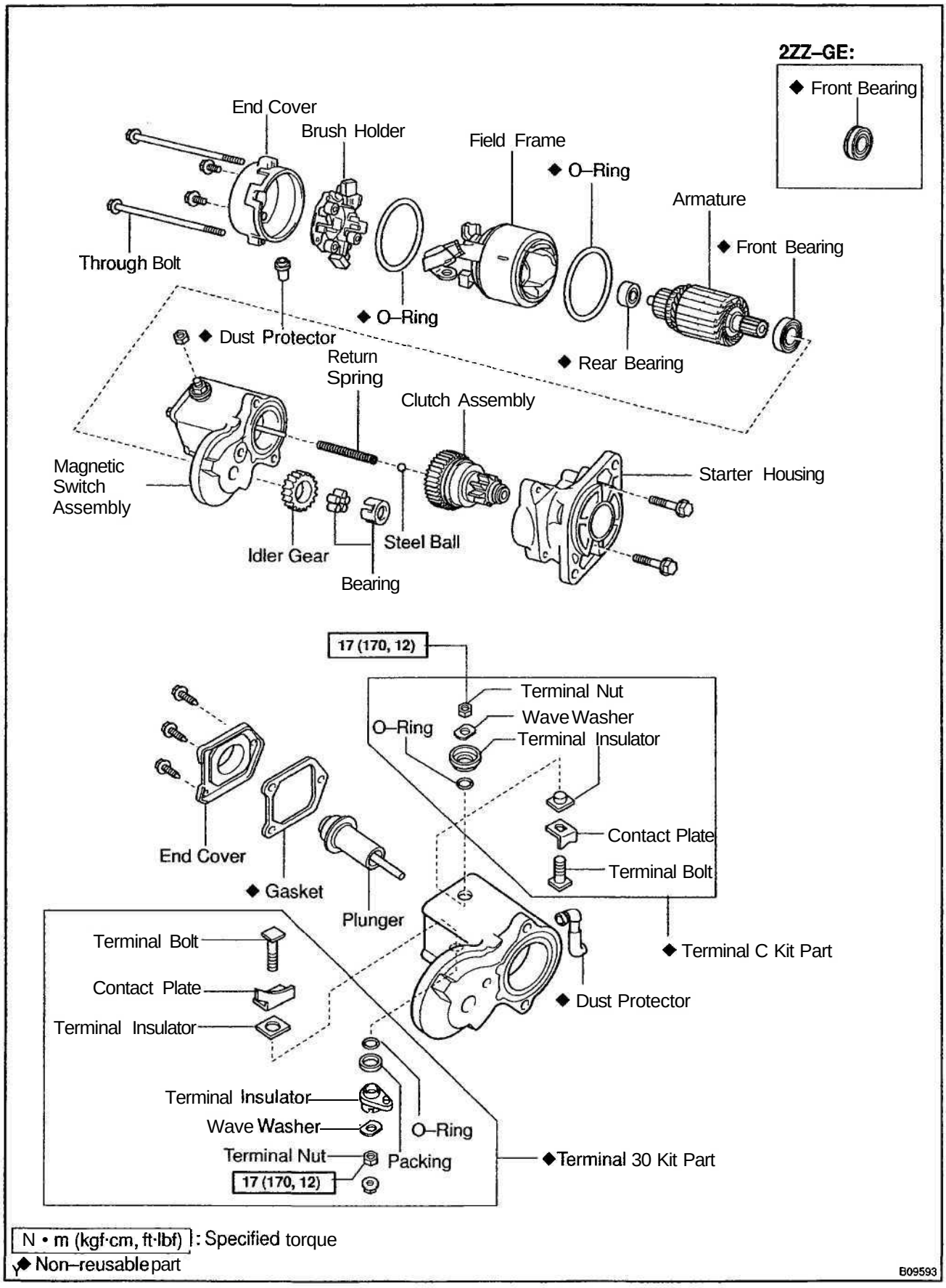
2ZZ–GE:
◆ Front Bearing
End Cover
Brush Holder
Field Frame
◆ O–Ring
Armature
◆ Front Bearing
Through Bolt
◆ O–Ring
◆ Dust Protector
Return Spring
Clutch Assembly
◆ Rear Bearing
Magnetic Switch Assembly
Starter Housing
Idler Gear
Steel Ball
Bearing
17 (170, 12)
Terminal Nut
Wave Washer
O–Ring
Terminal Insulator
Contact Plate
Terminal Bolt
End Cover
◆ Gasket
Plunger
◆ Terminal C Kit Part
Terminal Bolt
Contact Plate
Terminal Insulator
◆ Dust Protector
Terminal Insulator
Wave Washer
O–Ring
Terminal Nut
Packing
17 (170, 12)
◆ Terminal 30 Kit Part
N • m (kgf·cm, ft·lbf) : Specified torque
◆ Non–reusable part
B09593

ST0HO-01

REMOVAL

1. REMOVE UPPER RADIATOR SUPPORT SEAL
2. REMOVE AIR CLEANER ASSEMBLY
   (See page EM–74)
3. REMOVE RH AND LH ENGINE UNDER COVER

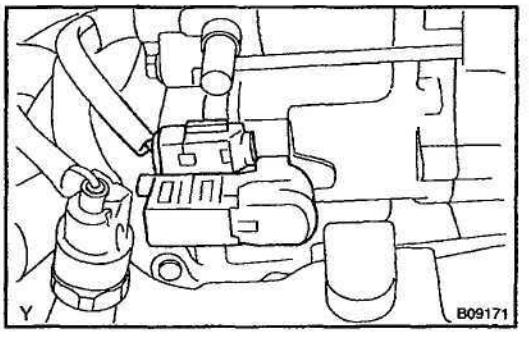

4. REMOVE STARTER

(a) Disconnect the starter connector.

(b) Remove the nut, and disconnect the starter wire.

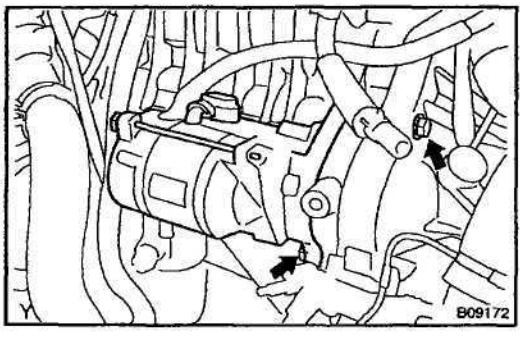

(c) Remove the 2 bolts and starter.

ST0HP-01

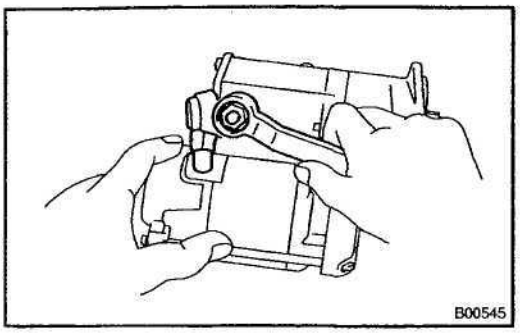

DISASSEMBLY

1. REMOVE FIELD FRAME WITH ARMATURE FROM MAGNETIC SWITCH ASSEMBLY

(a) Remove the nut, and disconnect the lead wire from the magnetic switch terminal.

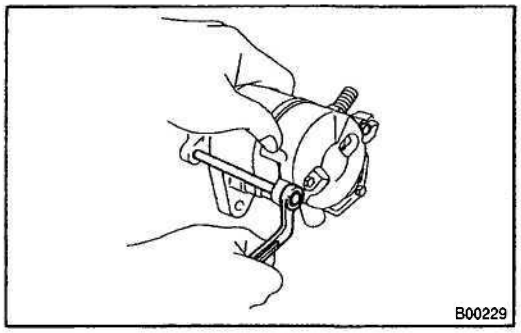

(b) Remove the 2 through bolts.

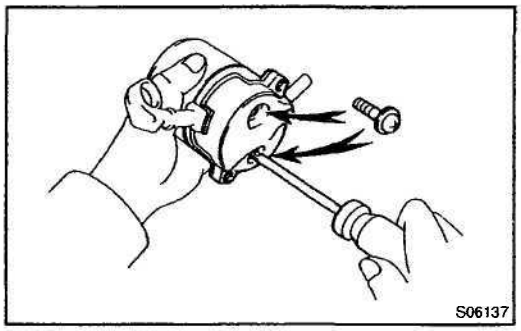

(c) Remove the 2 screws and end cover from the field frame.

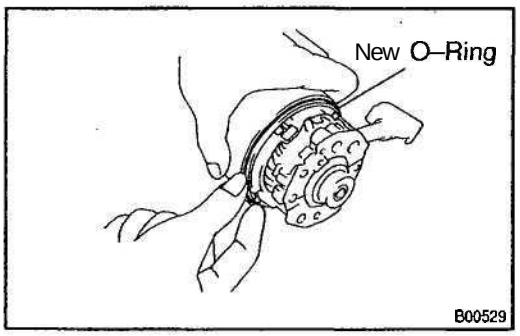

(d) Remove the O–ring from the field frame.

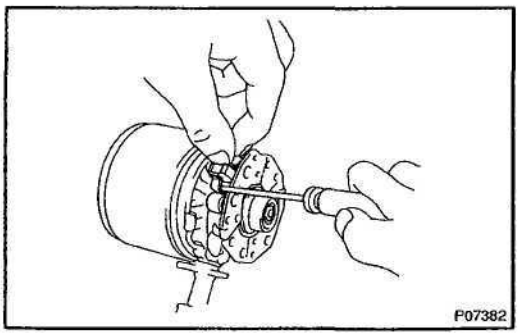

(e) Using a screwdriver, hold the spring tank back and disconnect the brush from the brush holder. Disconnect the 4 brushes and remove the brush holder.

(f) Pull out the field frame from the magnetic switch assembly.

(g) Remove the O–ring.

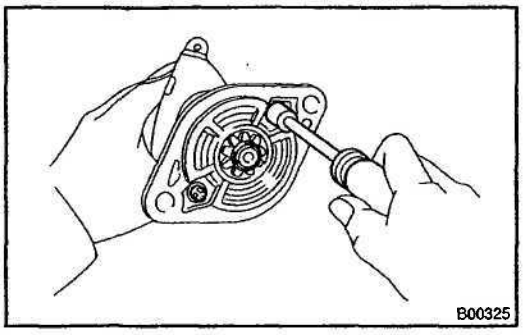

2. REMOVE STARTER HOUSING, CLUTCH ASSEMBLY ANDGEARS

(a) Remove the 2 bolts.
Torque: 5.9 N·m (60 kgf·cm, 52 in.·lbf)

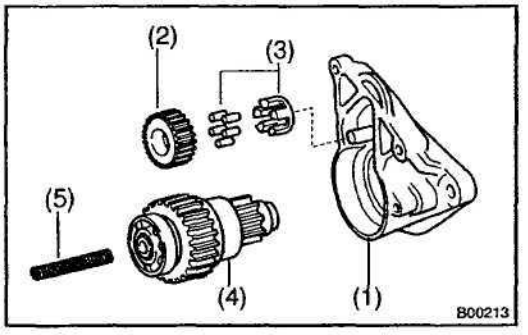

(b) Remove these parts from the magnetic switch assembly:
(1) Starter housing
(2) Idler gear
(3) Bearing
(4) Clutch assembly
(5) Return spring

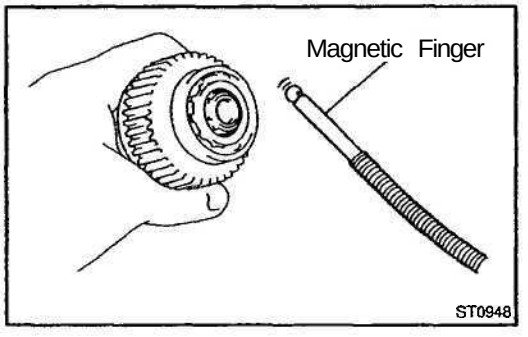

3. REMOVE STEEL BALL

Using a magnetic finger, remove the steel ball from the clutch shaft hole.

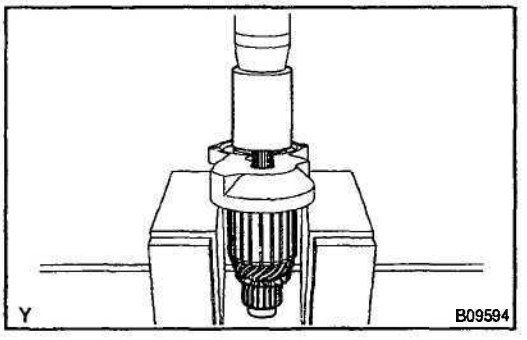

4. REMOVE ARMATURE FROM MAGNETIC SWITCH ASSEMBLY

(a) 1ZZ-FE
Remove the armature from the magnetic switch assembly.

(b) 2ZZ-GE:
Using a press, remove the armature from the magnetic switch assembly.

ST0FP-02

INSPECTION

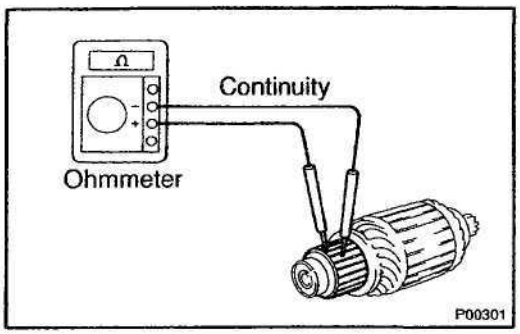

1. INSPECT ARMATURE COIL COMMUTATOR FOR OPEN CIRCUIT

Using an ohmmeter, check that there is continuity between the segments of the commutator.

If there is no continuity between any segment, replace the armature.

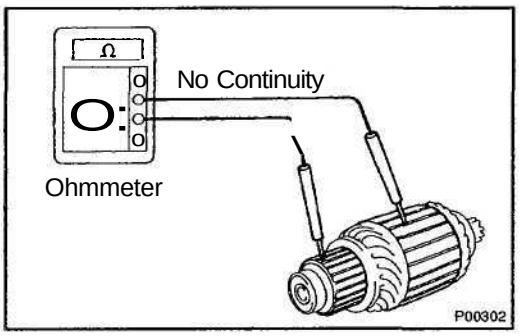

2. INSPECT ARMATURE COIL COMMUTATOR FOR GROUND

Using an ohmmeter, check that there is no continuity between the commutator and armature coil core.

If there is continuity, replace the armature.

3. INSPECT COMMUTATOR FOR DIRTY AND BURNT SURFACES

If the surface is dirty or burnt, correct with sandpaper (No.400) or a lathe.

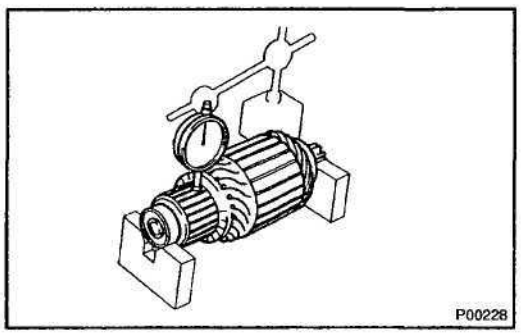

4. INSPECT COMMUTATOR CIRCLE RUNOUT

(a) Place the commutator on V–blocks.

(b) Using a dial gauge, measure the circle runout.

Maximum circle runout:
0.05 mm (0.0020 in.)

If the circle runout is greater than maximum, correct it on a lathe.

ST

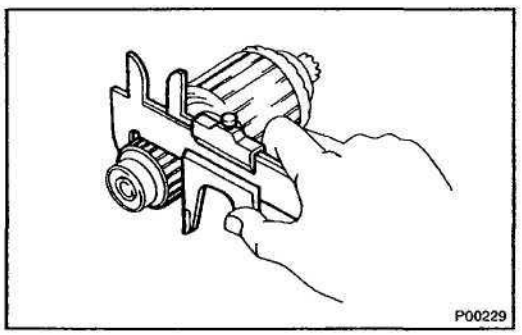

5. INSPECT COMMUTATOR DIAMETER

Using vernier calipers,measure the commutator diameter.

Standard diameter:
30 mm (1.18 in.)
Minimum diameter:
29 mm (1.14 in.)

If the diameter is less than minimum, replace the armature.

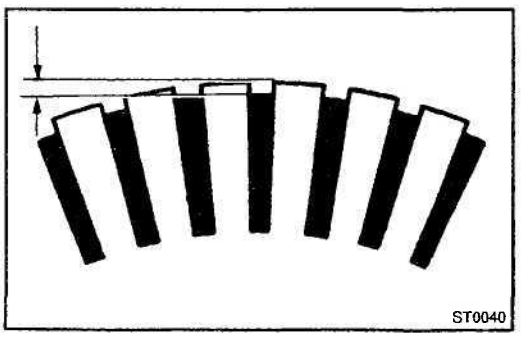

6. INSPECT COMMUTATOR UNDERCUT DEPTH

Check that the undercut depth is clean and free of foreign materials. Smooth out the edge.

Standard undercut depth:
0.6 mm (0.024 in.)
Minimum undercut depth:
0.2 mm (0.008 in.)

If the undercut depth is less than minimum, correct it with a hacksaw blade.

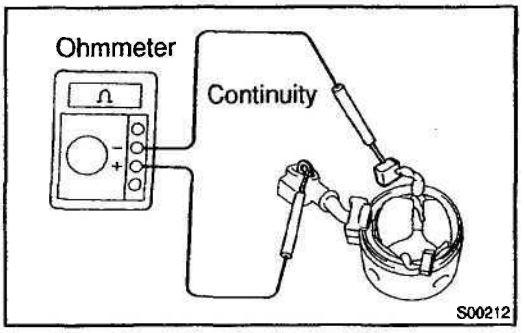

7. INSPECT FIELD FRAME (FIELD COIL) FOR OPEN CIRCUIT

Using an ohmmeter, check that there is continuity between the lead wire and field coil brush lead.
If there is no continuity, replace the field frame.

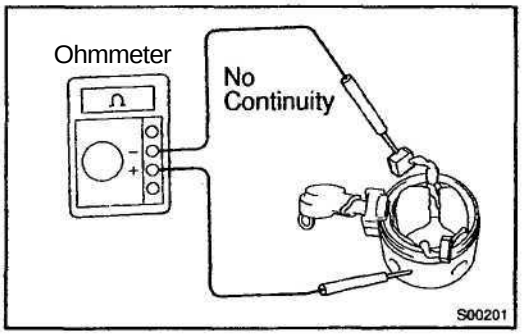

8. INSPECT FIELD FRAME (FIELD COIL) GROUND

Using an ohmmeter, check that there is no continuity between the field coil end and field frame.
If the is continuity, repair or replace the field frame.

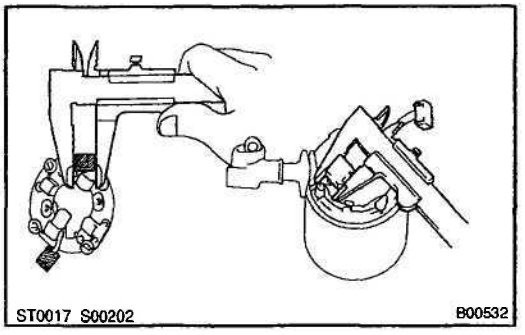

ST

9. INSPECT BRUSH LENGTH

Using vernier calipers, measure the brush length.

Standard length:
15.5 mm (0.610 in.)
Minimum length:
10.0 mm (0.394 in.)

If the length is less than minimum, replace the brush holder and field frame.

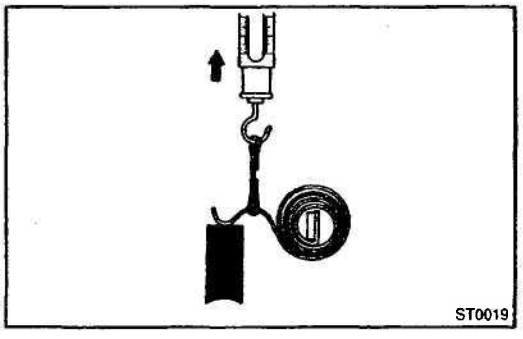

10. INSPECT BRUSH SPRING LOAD

Take the pull scale reading the instant the brush spring separates from the brush.

14 kW type
Standard spring installed load:
17.6 - 23.5 N (1.80 - 2.40 kgf, 4.0 - 5.3 lbf)
Minimum spring installed load:
11.8 N (1.20 kgf, 2.6 lbf)
1.2 kW type
Standard spring installed load:
13.7 – 19.6 N (1.40 - 2.0 kgf, 3.1 - 4.6 lbf)
Minimum spring installed load:
8.8 N (0.9 kgf, 2.0 lbf)

If the installed load is not within specification, replace the brush springs.

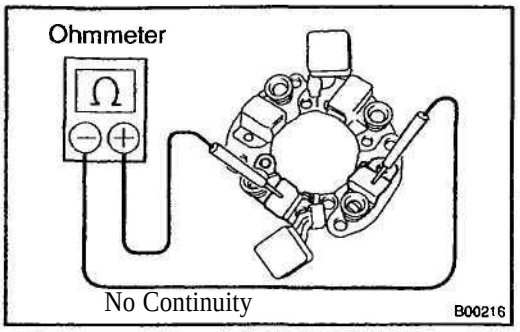

11. INSPECT BRUSH HOLDER INSULATION

Using an ohmmeter, check that there is no continuity between the positive (+) and negative (-) brush holders.

If there is continuity, repair or replace the brush holder.

12. INSPECT GEAR TEETH

Check the gear teeth on the pinion gear, idler gear and clutch assembly for wear or damage.

If damaged, replace the gear or clutch assembly.

If damaged, also check the drive plate ring gear for wear or damage.

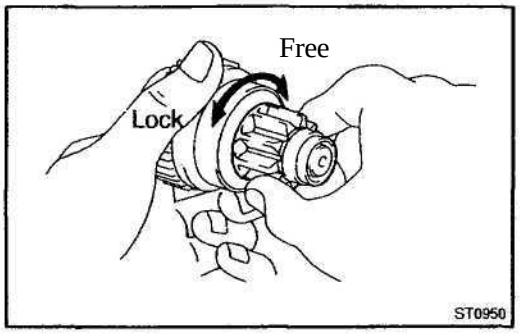

13. INSPECT CLUTCH

Rotate the clutch pinion gear clockwise, and check that it turns freely.

Try to rotate the clutch pinion gear counter–clockwise and check that it locks.

If necessary, replace the clutch assembly.

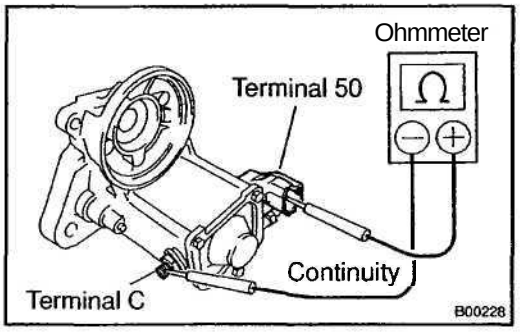

14. DO MAGNETIC SWITCH PULL–IN COIL OPEN CIRCUIT TEST

Using an ohmmeter, check that there is continuity between terminals 50 and C.

If there is no continuity, check and replace the magnetic switch.

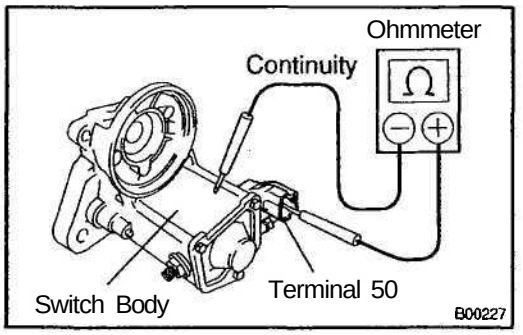

15. DO MAGNETIC SWITCH HOLD–IN COIL OPEN CIRCUIT TEST

Using an ohmmeter, check that there is continuity between terminal 50 and the switch body.

If there is no continuity, replace the magnetic switch.

ST0FO-02

REPLACEMENT

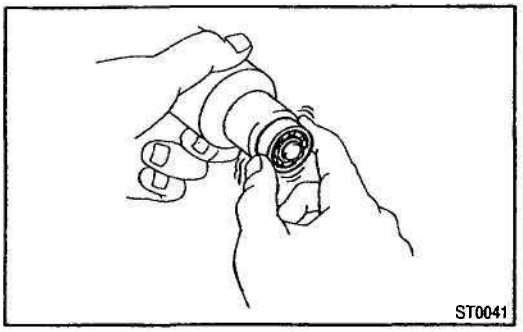

1. INSPECT BEARING

Turn the bearing by hand while applying inward force.
If resistance is felt or if the sticks, replace the bearing.

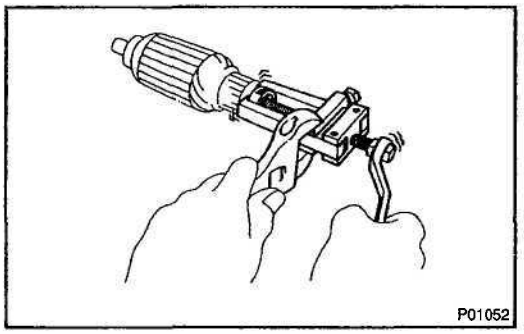

2. **REPLACE BEARINGS**

(a) Using SST, remove the bearing.
SST 09286–46011

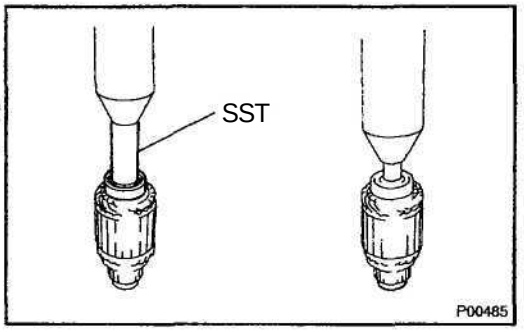

(b) Using SST and a press, press in a new front bearing.
SST 09820–00030

(c) Using a press, press in a new rear bearing.

3. REMOVE MAGNETIC SWITCH END COVER

(a) Remove the 3 bolts, end cover, gasket and plunger.

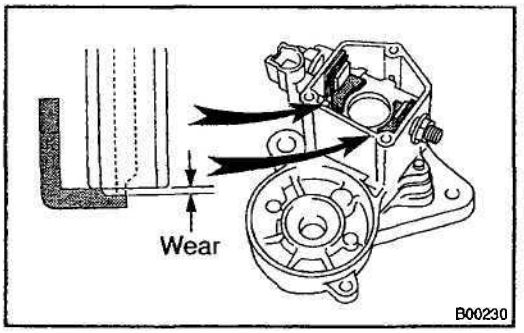

(b) Inspect the contact plate for wear.
Using vernier calipers, measure the contact plate for depth of wear.
Maximum wear: 0.9 mm (0.035 in.)

If the depth of wear is greater than the maximum, replace the contact plate.

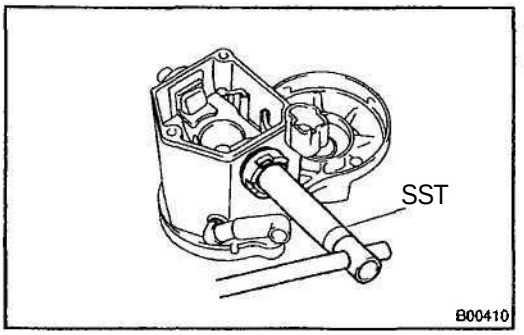

(c) Remove the terminal kit parts.
(1) Using SST, loosen the terminal nuts.
SST 09810–38140
(2) Terminal C:
Remove the terminal nut, wave washer, terminal insulator (outside), O-ring, terminal bolt, contact plate and terminal insulator (inside).

ST

(3) Terminal 30:
Remove the terminal nut, wave washer, terminal insulator (outside), packing, O–ring, terminal bolt, contact plate, and terminal insulator (inside).

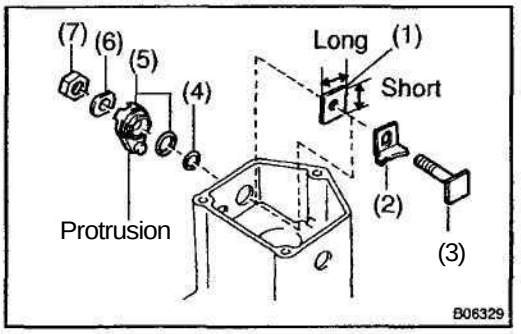

(d) Temporarily install a new terminal 30 kit parts.
(1) Install a terminal insulator (inside).

NOTICE:

Be careful to install the terminal insulator in the correct direction.

(2) Install a contact plate.
(3) Install a terminal bolt.
(4) Install a O–ring.
(5) Install a packing and terminal insulator (outside). Install the packing to the terminal insulator, and install them.

HINT:

Match the protrusion of the insulator with the indentation of the housing.

(6) Install a wave washer.
(7) Install a terminal nut.

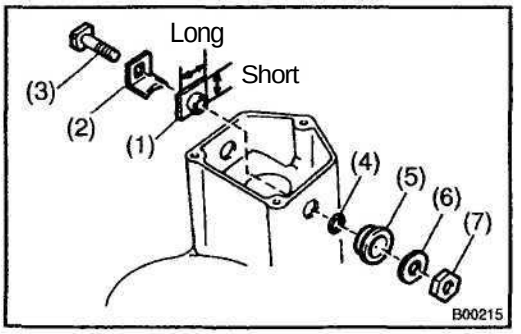

(e) Temporarily install new terminal C kit parts.
(1) Install a terminal insulator (inside).
(2) Install a contact plate.
(3) Install a terminal bolt.
(4) Install a O–ring.
(5) Install a terminal insulator (outside).
(6) Install a wave washer.
(7) Install a terminal nut.

NOTICE:

Be careful to install the terminal insulator (inside) in the correct direction.

(f) Temporarily tighten the terminal nuts.

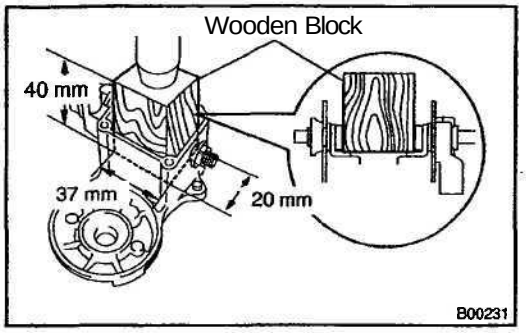

(g) Tighten terminal nut.

(1) Put a wooden block on the contact plate and press it down with a hand press.

Dimensions of wooden block:
20 x 37 x 40 mm (0.79 x 1.46 x 1.57 in.)
Press force:
981 N (100 kgf, 221 lbf)

NOTICE:
Check the diameter of the hand press ram. Then calculate the gauge pressure of the press when 981 N (100 kgf, 221 lbf) of force is applied.

Gauge pressure:

$$(\text{kgf/cm}^2) = \frac{100 \text{ kgf}}{\left(\frac{\text{Ram diameter (cm)}}{2}\right)^2 \times 3.14(\pi)}$$

$$(\text{psi}) = \frac{221 \text{ ibf}}{\left(\frac{\text{Ram diameter (in.)}}{2}\right)^2 \times 3.14\ (\pi)}$$

$$(\text{kpa}) = (\text{kgf/cm}^2) \times 98.1$$

$$(\text{kpa}) = (\text{psi}) \times 6.9$$

If the contact plate is not pressed down with the specified pressure, the contact plate may tilt due to coil deformation or the tightening of the nut.

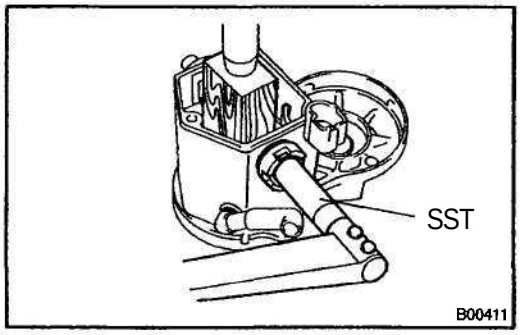

(2) Using SST, tighten the nuts to the specified torque.
SST 09810–38140
Torque: 17 N·m (173 kgf·cm, 12 ft·lbf)

NOTICE:
If the nut is over tightened, it may cause cracks on the inside of the insulator.

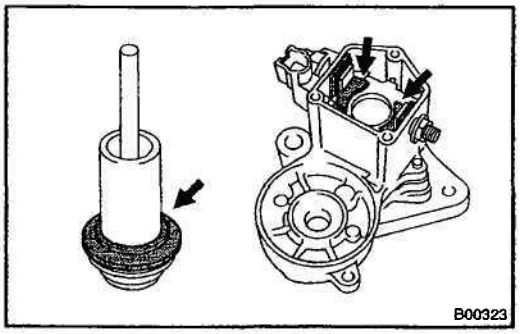

(h) Clean contact surfaces of contact plate and plunger.
Clean the contact surfaces of the remaining contact plate and plunger with a dry shop rag.

(i) Reinstall magnetic switch end cover.
Install the plunger, new gasket, end cover with the 3 bolts.
Torque: 2.5 N·m (26 kgf cm, 23 in.·lbf)

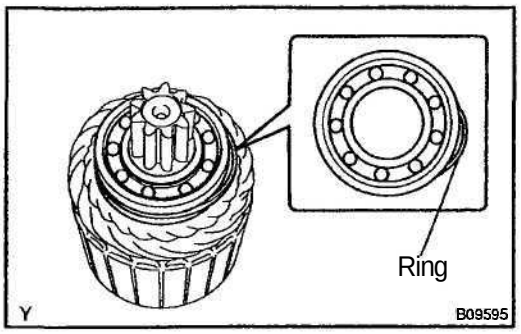

REASSEMBLY

HINT:

Use high-temperature grease to lubricate the bearings and gears when assembling the starter.

1. INSTALL ARMATURE TO MAGNETIC SWITCH ASSEMBLY

(a) 2ZZ–GE:

Rotating the ring of the front bearing, set it properly so that the projection of the ring is positioned in the narrowest part.

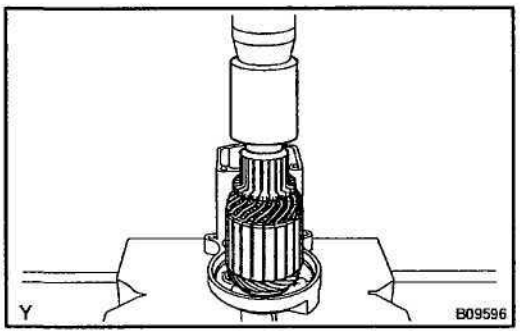

(b) Apply grease to the armature bearings.

(c) 1ZZ-FE:

Install the armature to the magnetic switch assembly.

(d) 2ZZ–GE:

Using a press, install the armature to the magnetic switch assembly.

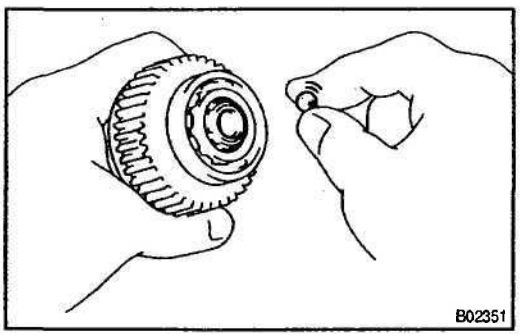

2. INSERT STEEL BALL INTO CLUTCH SHAFT HOLE

(a) Apply grease to the steel ball.

(b) Insert the steel ball into the clutch shaft hole.

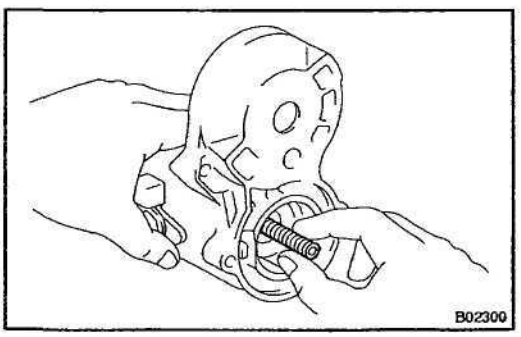

3. INSTALL STARTER HOUSING, CLUTCH ASSEMBLY AND GEARS

(a) Apply grease to the return spring.

(b) Insert the return spring into the magnetic switch hole.

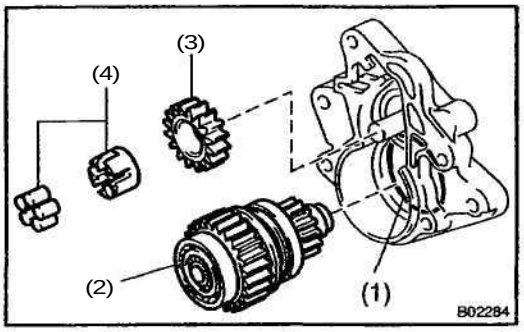

(c) Place these parts on the starter housing:
(1) New O–ring
(2) Starter clutch assembly
(3) Idler gear
(4) Bearing

(d) Install the starter housing to the magnetic switch with the 2 screws.
Torque: 9.3 N·m (95 kgf·cm, 82 in.·lbf)

4. INSTALL FIELD FRAME

(a) Install a new O–ring to the groove of the filed frame.

(b) Align the protrusion of the field frame with the groove of the magnetic switch, and install the field frame.

5. INSTALL BRUSH HOLDER

(a) Place the brush holder on the field frame.

(b) Using a screwdriver, hold the brush spring back, and connect the brush into the brush holder. Connect the 4 brushes.

NOTICE:
Check that the positive (+) lead wires are not grounded.

6. INSTALL END COVER

(a) Install a new O–ring to the groove of the field frame.

(b) Install the end cover to the field frame with the 2 screws.
Torque: 3.8 N·m (39 kgf·cm, 34 in.·lbf)

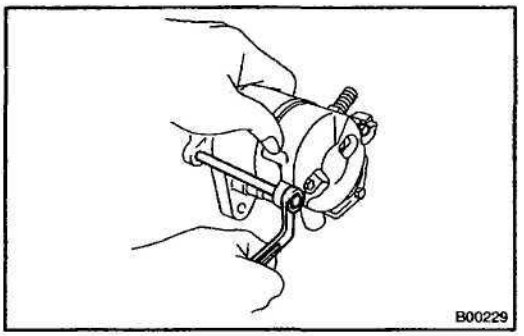

(c) Install the field frame and armature assembly with the 2 through bolts.
Torque: 9.3 N·m (95 kgf·cm, 82 in.·lbf)

(d) Connect the lead wire to terminal C with the nut.
Torque: 5.9 N·m (60 kgf·cm, 52 in.·lbf)

7. INSTALL NEW DUST PROTECTOR

ST02S-01

TEST

NOTICE:

These tests must be performed within 3 to 5 seconds to avoid burning out the coil.

1. DO PULL-IN TEST

(a) Disconnect the field coil lead wire from terminal C.

(b) Connect the battery to the magnetic switch as shown.
Check that the clutch pinion gear moves outward.

If the clutch pinion gear does not move.

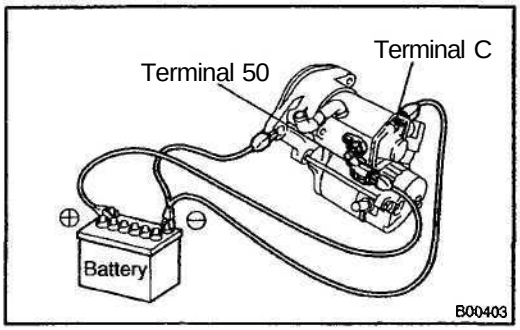

2. DO HOLD-IN TEST

With battery connected as above with the clutch pinion gear out, disconnect the negative (-) lead from terminal C.

If the clutch pinion gear returns inward.

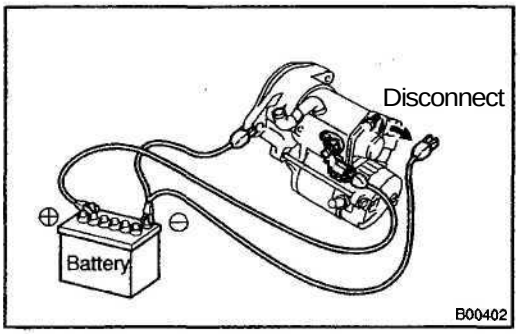

3. INSPECT CLUTCH PINION GEAR RETURN

Disconnect the negative (-) lead from the switch body.

Check that the clutch pinion gear returns inward.

If the clutch pinion gear does not return.

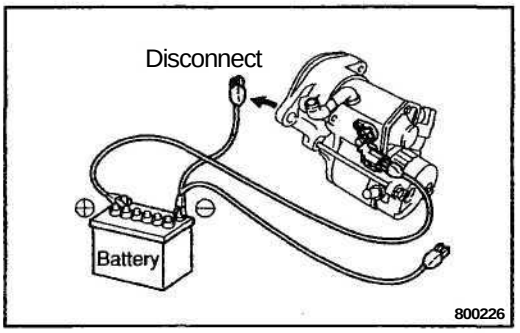

4. DO NO-LOAD PERFORMANCE TEST

(a) Connect the battery and ammeter to the starter as shown.

(b) Check that the starter rotates smoothly and steadily with the pinion gear moving out.
Check that the ammeter shows the specified current.
Specified current: 90 A or less at 11.5 V

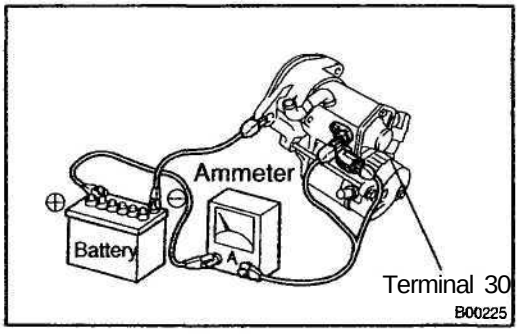

ST0HR-01

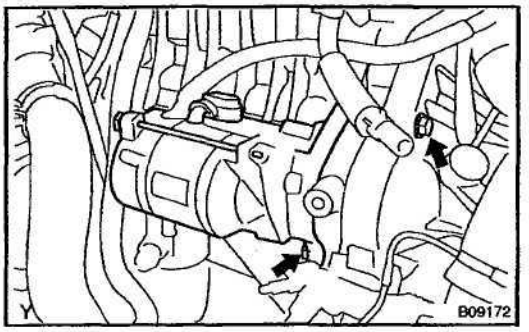

INSTALLATION

1. INSTALL STARTER

(a) Install the 2 bolts and starter.

HINT:

Each bolt length is indicated in the illustration.

Bolt length

A 64 mm (2.72 in.)

B 54 mm (2.13 in.)

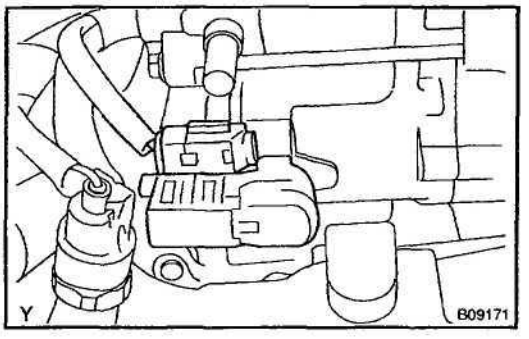

(b) Connect the starter wire, and install the nut.

(c) Connect the starter connector.

2. INSTALL RH AND LH ENGINE UNDER COVER

3. INSTALL AIR CLEANER ASSEMBLY

4. INSTALL UPPER RADIATOR SUPPORT SEAL

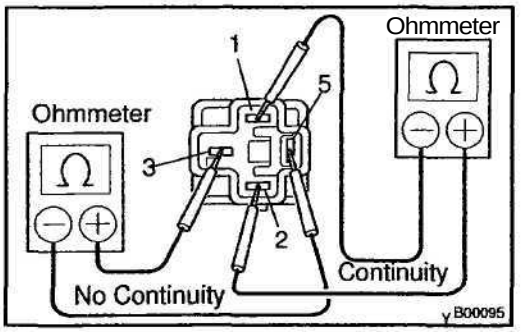

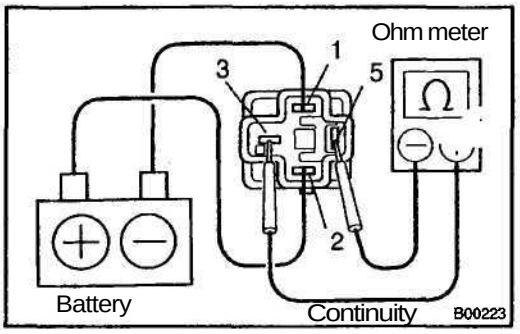

STARTER RELAY

ST02U-01

INSPECTION

1. REMOVE STARTER RELAY

2. INSPECT STARTER RELAY CONTINUITY

(a) Using an ohmmeter, check that there is continuity between terminals 1 and 2.

If there is no continuity, replace the relay.

(b) Check that there is no continuity between terminals 3 and 5.

If there is continuity, replace the relay.

3. INSPECT STARTER RELAY OPERATION

(a) Apply battery positive voltage across terminals 1 and 2.

(b) Using an ohmmeter, check that there is continuity between terminals 3 and 5.

If there is continuity, replace the relay.

4. REINSTALL STARTER RELAY

-MEMO-

CHARGING

CHARGING SYSTEM CH–1
GENERATOR CH–5

CH

CHARGING SYSTEM

PRECAUTION

CH021-01

- Check that the battery cables are connected to the correct terminals.
- Disconnect the battery cables when the battery is given a quick charge.
- Do not perform tests with a high voltage insulation resistance tester.
- Never disconnect the battery while the engine is running.

C

CHOAP-03

ON–VEHICLE INSPECTION

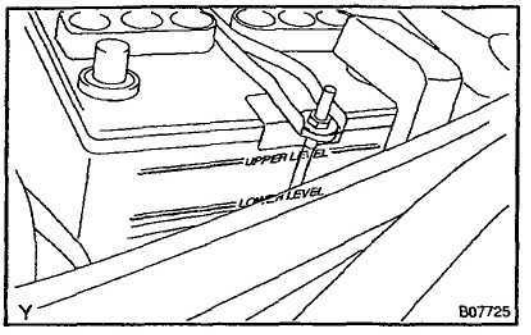

1. CHECK BATTERY ELECTROLYTE LEVEL

Check the electrolyte quantity of each cell.

Maintenance–Free Battery:

If under the lower level, replace the battery (or add distilled water if possible) and check the charging system.

Except Maintenance–Free Battery:

If under the lower level, add distilled water.

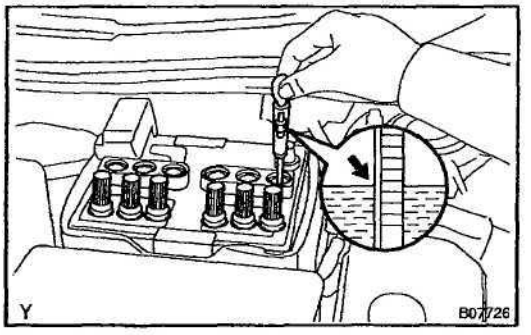

2. Except Maintenance–Free Battery: CHECK BATTERY SPECIFIC GRAVITY

Check the specific gravity of each cell.

Standard specific gravity:
1.25 – 1.29 at 20°C (68 °F)

If the specific gravity is less than specification, charge the battery.

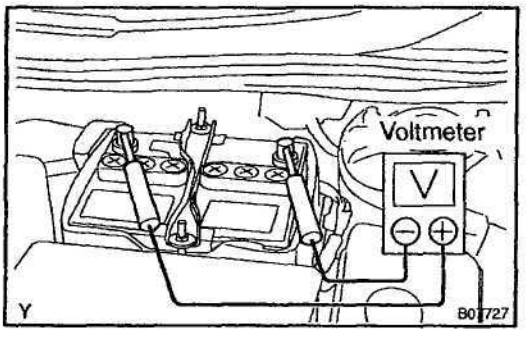

CH

3. CHECK BATTERY VOLTAGE

(a) After having driven the vehicle and in the case that 20 minutes have not passed after having stopped the engine, turn the ignition switch ON and turn on the electrical system (headlight, blower motor, rear defogger etc.) for 60 seconds to remove the surface charge.

(b) Turn the ignition switch OFF and turn off the electrical systems.

(c) Measure the battery voltage between the negative (-) and positive (+) terminals of the battery.

Standard voltage: 12.5 – 12.9 V at 20°C (68°F)

If the voltage is less than specification, charge the battery.

HINT:

Check the indicator as shown in illustration.

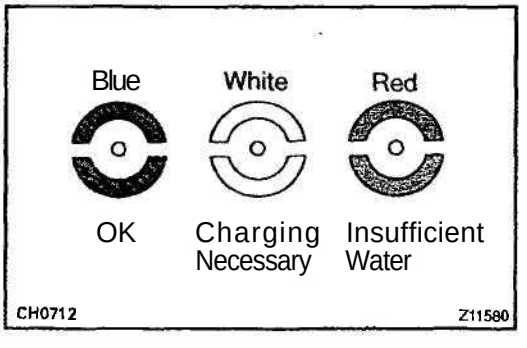

4. CHECK BATTERY TERMINALS, FUSIBLE LINK AND FUSES

(a) Check that the battery terminals are not loose or corroded.

(b) Check the fusible link, H-fuses and fuses for continuity.

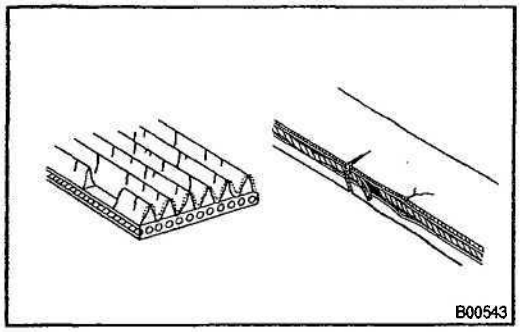

5. INSPECT DRIVE BELT

(a) Visually check the belt for excessive wear, frayed cords etc.

If any defect has been found, replace the drive belt.

HINT:

- Cracks on the rib side of a belt are considered acceptable. If the belt has chunks missing from the ribs, it should be replaced.

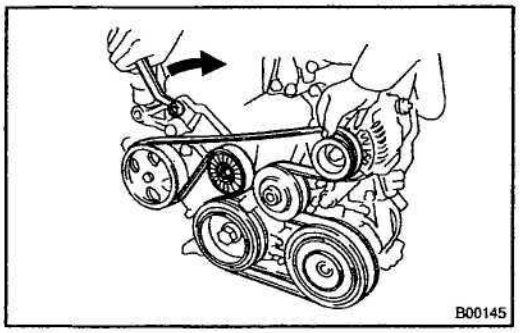

- The drive belt tension can be released by turning the belt tensioner clockwise.

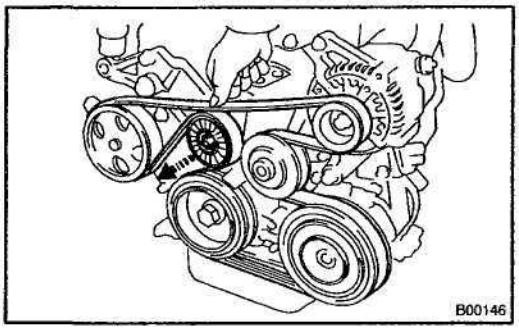

(b) Check the belt tensioner operation.

- Check that belt tensioner moves downward when the drive belt is pressed down at the points indicated in the illustration with approx. 98 N (10 kgf, 22.0 lbf) of force.
- Check the alighment of the belt tensioner pulley to make sure the drive belt will not slip off the pulley.

If necessary, replace the belt tensioner.

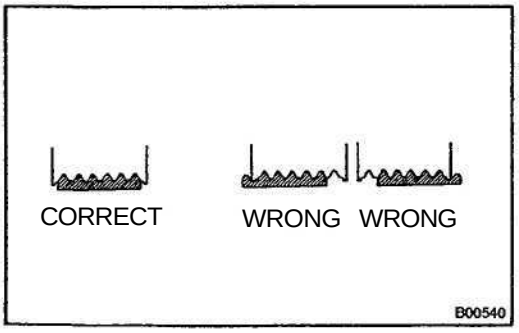

HINT:

- After installing a belt, check that it fits properly in the ribbed grooves.
- Check with your hand to confirm that the belt has not slipped out of the groove on the bottom of the pulley.
- After installing a new belts, run the engine for about 5 minutes and check the belt tension existing.

6. VISUALLY CHECK GENERATOR WIRING AND LISTEN FOR ABNORMAL NOISES

(a) Check that the wiring is in good condition.

(b) Check that there is no abnormal noise from the generator while the engine is running.

7. INSPECT DISCHARGE WARNING LIGHT CIRCUIT

(a) Turn the ignition switch "ON". Check that the discharge warning light comes on.

(b) Start the engine. Check that the light goes off.

If the light does not operate as specified, troubleshoot the discharge warning light circuit.

8. INSPECT CHARGING CIRCUIT WITHOUT LOAD

HINT:

If a battery/generator tester is available, connect the tester to the charging circuit as permanufacturer's instructions.

(a) If a tester is not available, connect a voltmeter to the charging circuit as follows:

- Disconnect to the wire from terminal B of the generator and connect it to the negative (-) lead of the ammeter.

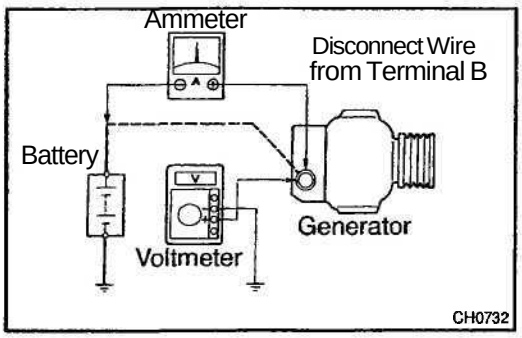

- Connect the positive (+) lead of the ammeter to terminal B of the generator.
- Connect the positive (+) lead of the voltmeter to terminal B of the generator.
- Ground the negative (-) lead of the voltmeter.

(b) Check the charging circuit as follows:

With the engine running from idle to 2,000 rpm, check the reading on the ammeter and voltmeter.

Standard amperage: 10A or less

Standard voltage: 13.2 – 14.8 V

If the voltmeter reading is more than standard voltage, replace the voltage regulator.

If the voltmeter reading is less than the standard voltage, check the voltage regulator and generator as follows:

CH

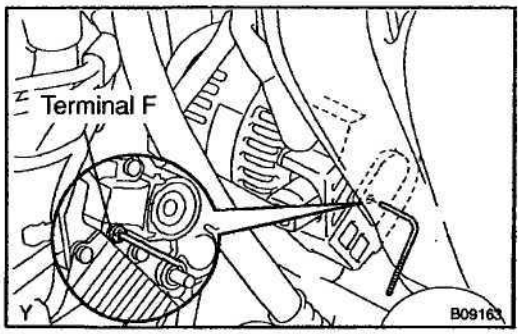

- With terminal F grounded, start the engine and check the voltmeter reading of terminal B.
- If the voltmeter reading is more than standard voltage, replace the voltage regulator.
- If the voltmeter reading is less than standard voltage, check the generator.

9. INSPECT CHARGING CIRCUIT WITH LOAD

(a) With the engine running at 2,000 rpm, turn on the high beam headlights and place the heater blower switch at "H".

(b) Check the reading on the ammeter.

Standard amperage: 30 A or more

If the ammeter reading is less than standard amperage, repair the generator.

HINT:

If the battery is fully charged, the indication will sometimes be less than standard amperage.

GENERATOR

COMPONENTS

CH023-02

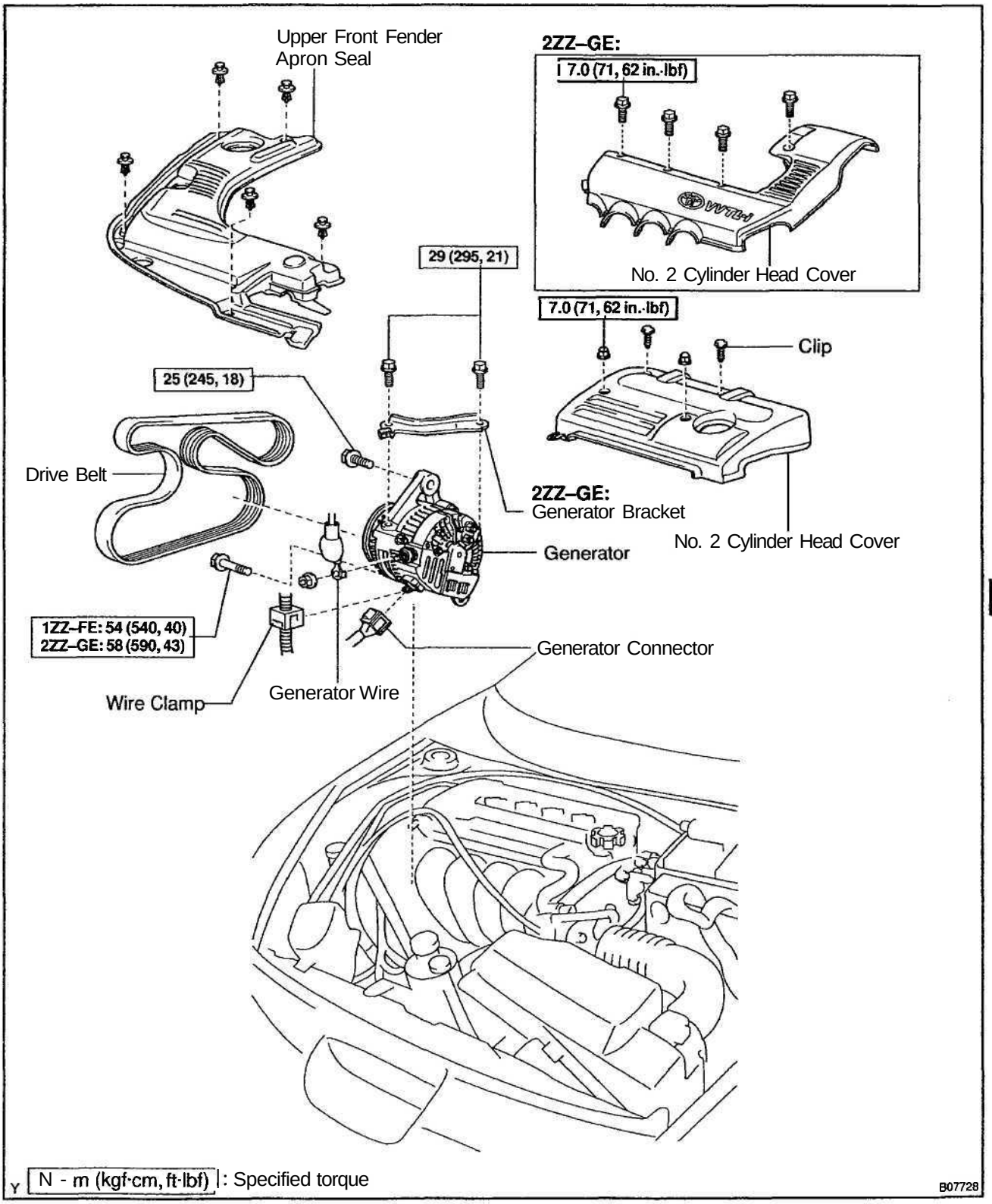

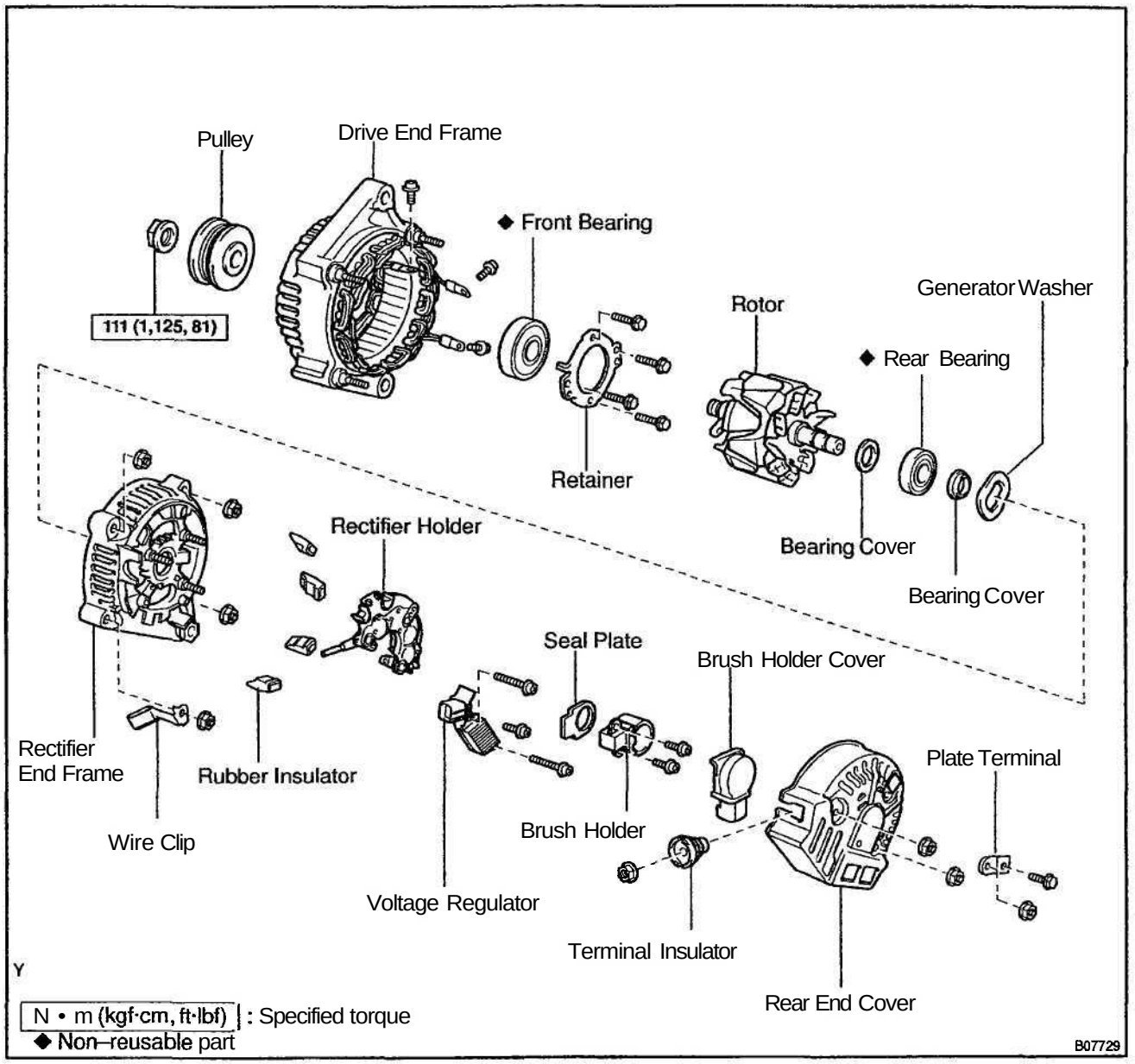
Pulley
Drive End Frame
◆ Front Bearing
111 (1,125, 81)
Rotor
Generator Washer
◆ Rear Bearing
Retainer
Bearing Cover
Bearing Cover
Rectifier Holder
Seal Plate
Brush Holder Cover
Plate Terminal
Rectifier End Frame
Rubber Insulator
Wire Clip
Brush Holder
Voltage Regulator
Terminal Insulator
Rear End Cover
Y
N • m (kgf·cm, ft·lbf) : Specified torque
◆ Non-reusable part
B07729

CH

CH024-02

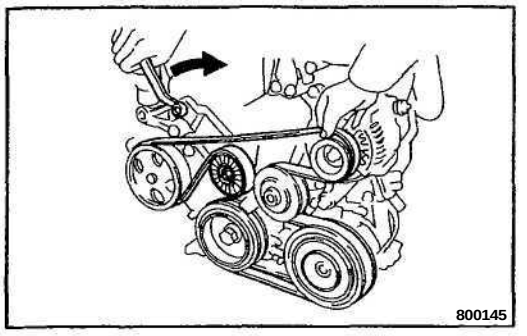

REMOVAL

1. REMOVE DRIVE BELT

Turn the drive belt tensioner slowly clockwise and loosen it. Then, remove the drive belt and replace the drive belt tensioner little by little and fix it quietly.

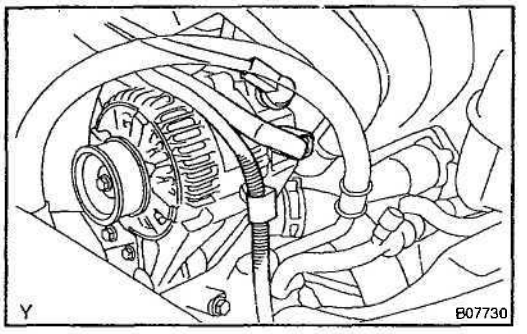

2. REMOVE GENERATOR

(a) Disconnect the wire clamp from the wire clip on the rectifier end frame.

(b) Remove the rubber cap and nut, and disconnect the generator wire.

(c) Disconnect the generator connector.

(d) 2ZZ–GE:
Remove the 2 bolts and generator bracket.

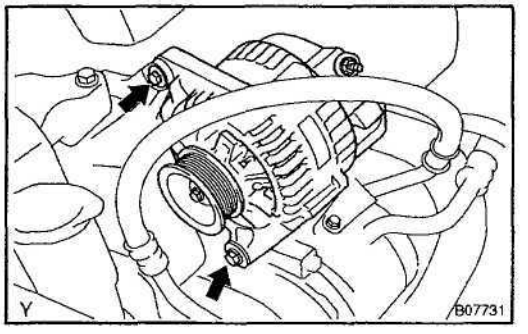

(e) Remove the 2 bolts and generator.

CH

CH025-03

DISASSEMBLY

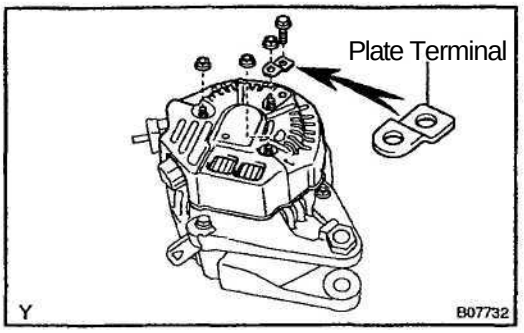

1. REMOVE REAR END COVER

(a) Remove the nut and terminal insulator.
(b) Remove the bolt, 3 nuts, plate terminal and end cover.

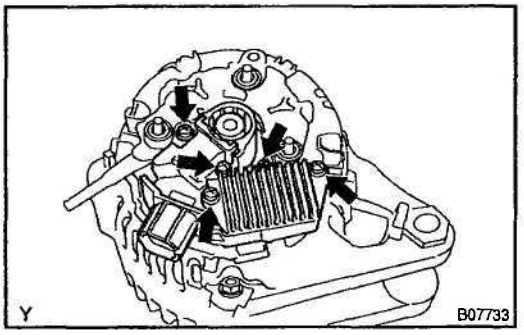

2. REMOVE BRUSH HOLDER AND VOLTAGE REGULATOR

(a) Remove the brush holder cover from the brush holder.
(b) Remove the 5 screws, brush holder and voltage regulator.
(c) Remove the seal plate from the rectifier end frame.

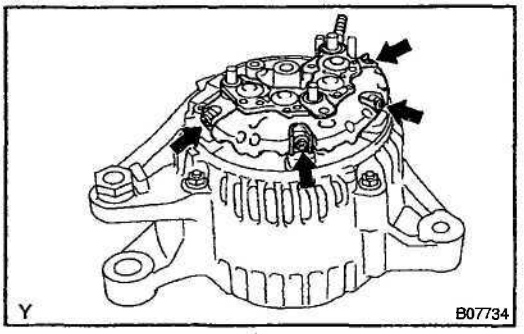

3. REMOVE RECTIFIER HOLDER

(a) Remove the 4 screws and rectifier holder.
(b) Remove the 4 rubber insulators.

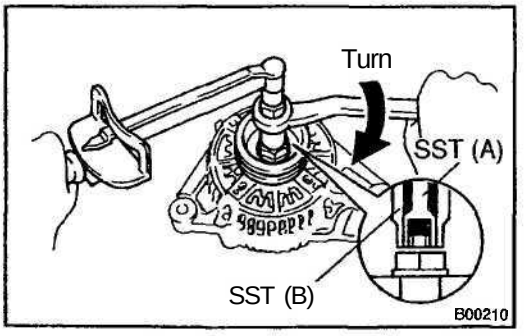

4. **REMOVE PULLEY**

(a) Hold SST (A) with a torque wrench, and tighten SST (B) clockwise to the specified torque.
SST 09820–63010
Torque: 39 N·m (400 kgf-cm, 29 ft·lbf)
(b) Check that SST (A) is secured to the rotor shaft.

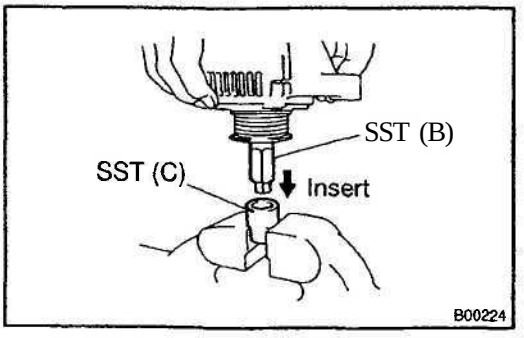

(c) Mount SST (C) in a vise.
(d) Insert SST (B) into SST (C), and attach the pulley nut to SST (C).

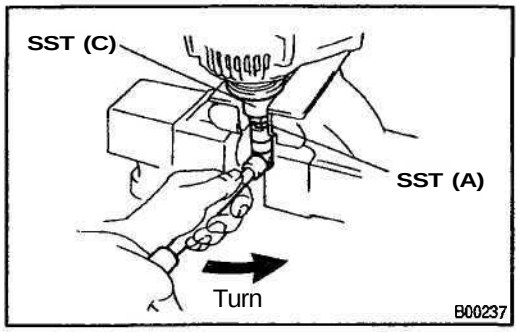

(e) To loosen the pulley nut, turn SST (A) in the direction shown in the illustration.

NOTICE:

To prevent damage to the rotor shaft, do not loosen the pulley nut more than one–half of a turn.

(f) Remove the generator from SST (C).

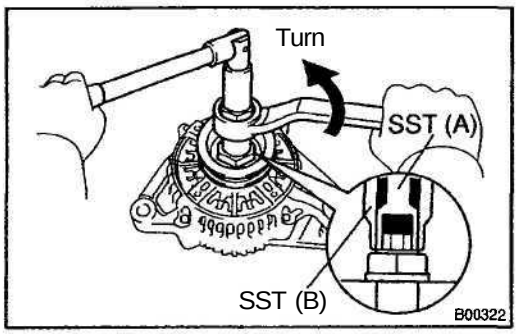

(g) Turn SST (B), and remove SST (A and B).

(h) Remove the pulley nut and pulley.

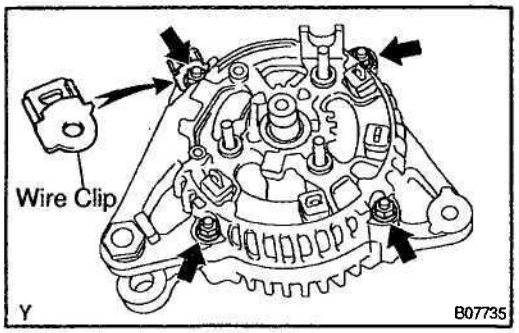

5. REMOVE RECTIFIER END FRAME

(a) Remove the 4 nuts and wire clip.

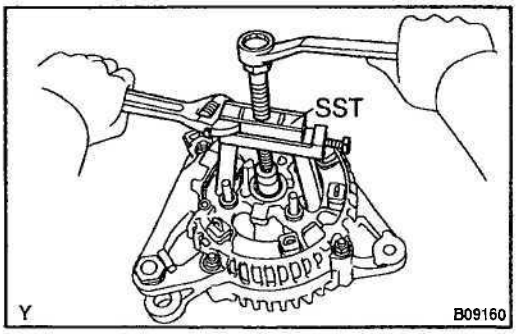

(b) Using SST, remove the rectifier end frame.
SST 09286–46011

(c) Remove the generator washer from the rotor

6. REMOVE ROTOR FROM DRIVE END FRAME

CH

CH0284-04

INSPECTION

1. INSPECT ROTOR FOR OPEN CIRCUIT

Using an ohmmeter, check that there is continuity between the slip rings.

Standard resistance:
MT 2.7 - 3.1 Ω at 20°C (68°F)
AT 2.1 - 2.5 Ω at **20°C (68°F)**

If there is no continuity, replace the rotor.

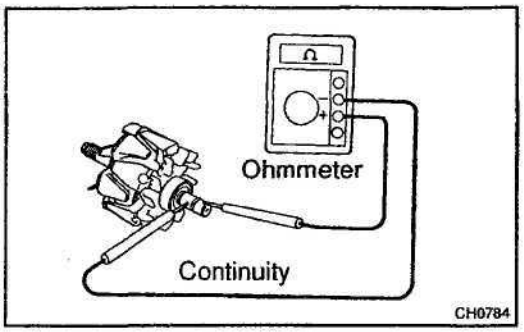

2. INSPECT ROTOR FOR GROUND

Using an ohmmeter, check that there is no continuity between the slip ring and rotor.

If there is continuity, replace the rotor.

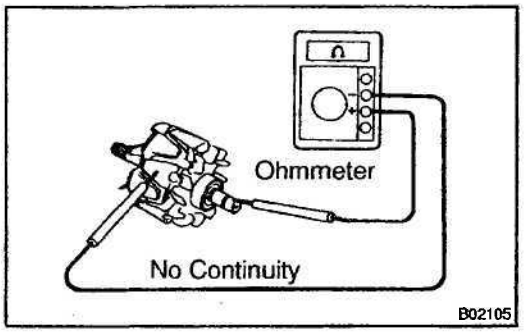

3. INSPECT SLIP RINGS

(a) Check that the slip rings are not rough or scored.

If rough or scored, replace the rotor.

(b) Using a vernier caliper, measure the slip ring diameter.

Standard diameter:
14.2 – 14.4 mm (0.559 - 0.567 in.)
Minimum diameter:
12.8 mm (0.504 in.)

If the diameter is less than minimum, replace the rotor.

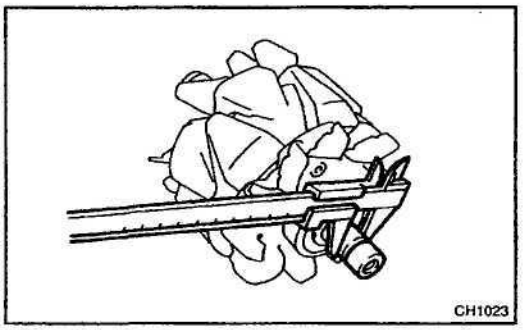

4. INSPECT STATOR (DRIVE END FRAME) FOR OPEN CIRCUIT

Using an ohmmeter, check that there is continuity between the coil leads.

If there is no continuity, replace the drive end frame assembly

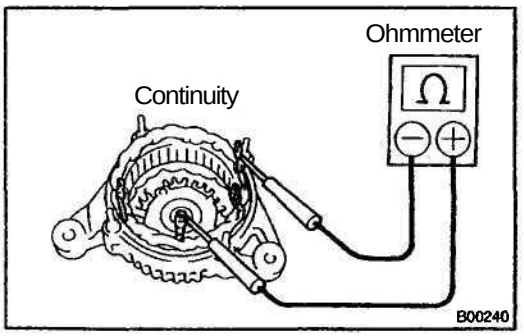

5. INSPECT STATOR (DRIVE END FRAME) FOR GROUND

Using an ohmmeter, check that there is no continuity between the coil lead and drive end frame.

If there is continuity, replace the drive end frame assembly

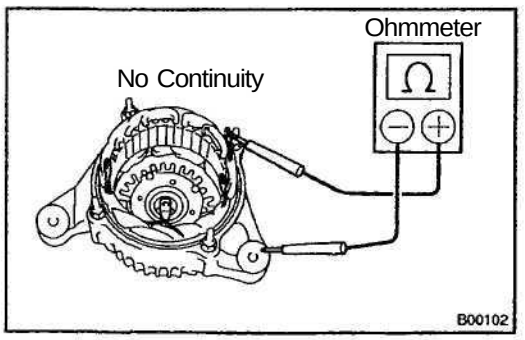

CH

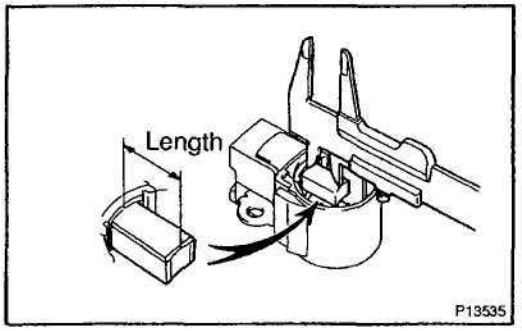

6. INSPECT EXPOSED BRUSH LENGTH

Using vernier calipers, measure the exposed brush length.

Standard exposed length:
9.5 ~ 11.5 mm (0.374 ~ 0.453 in.)
Minimum exposed length:
1.5 mm (0.059 in.)

If the exposed length is less than minimum, replace the brush holder assembly.

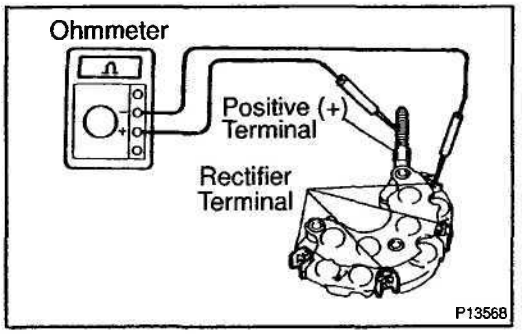

7. INSPECT POSITIVE RECTIFIER HOLDER

(a) Using an ohmmeter, connect one tester probe to the positive (+) terminal and the other to each rectifier terminal.
(b) Reverse the polarity of the tester probes and repeat step (a).
(c) Check that one shows continuity and the other shows no continuity.

If continuity is not as specified, replace the rectifier holder.

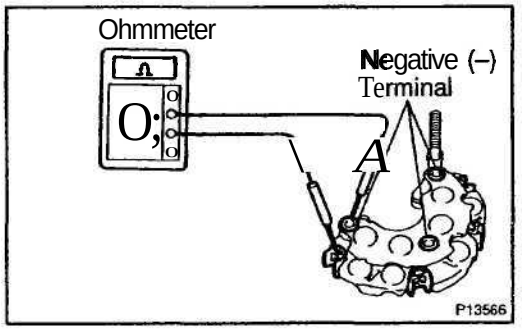

8. INSPECT NEGATIVE RECTIFIER HOLDER

(a) Using an ohmmeter, connect one tester probe to each negative (-) terminal and the other to each rectifier terminal.
(b) Reverse the polarity of the tester probes and repeat step (a).
(c) Check that one shows continuity and the other shows no continuity.

If continuity is not as specified, replace the rectifier holder.

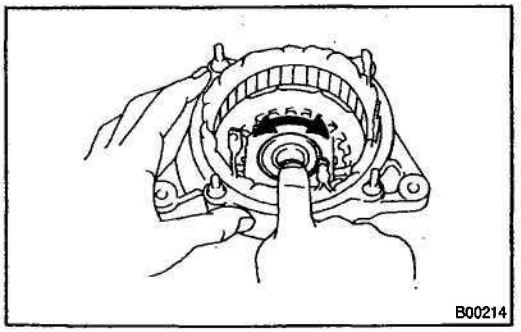

9. INSPECT FRONT BEARING

Check that the bearing is not rough or worn.

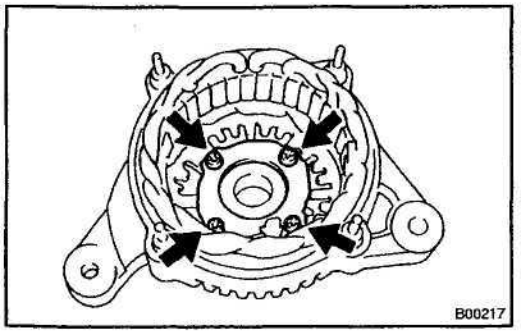

10. IF NECESSARY, REPLACE FRONT BEARING

(a) Remove the 4 screws, bearing retainer and bearing.

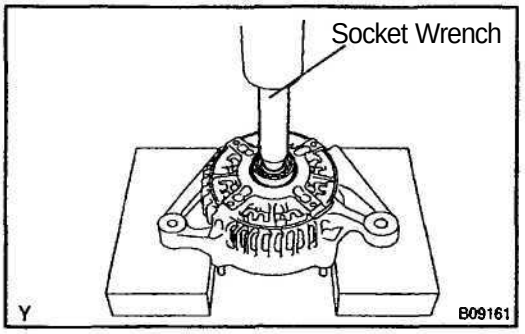

(b) Using SST and a press, press out the bearing.
SST 09950-60010 (09951–00350) 09950-70010 (09951–07100)

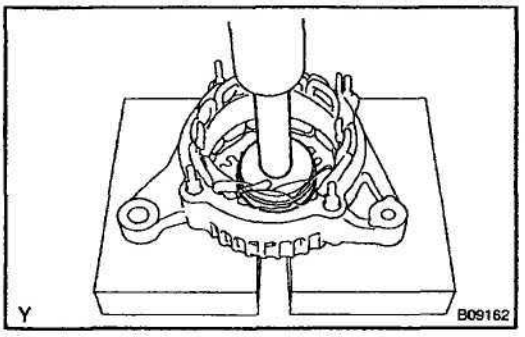

(c) Using SST and a press, press in a new bearing.
SST 09950-60010 (09951-00530) 09950-70010 (09951–07100)

(d) Install the bearing retainer with the 4 screws.
Torque: 3.0 N·m (31 kgf·cm, 27 in.·lbf)

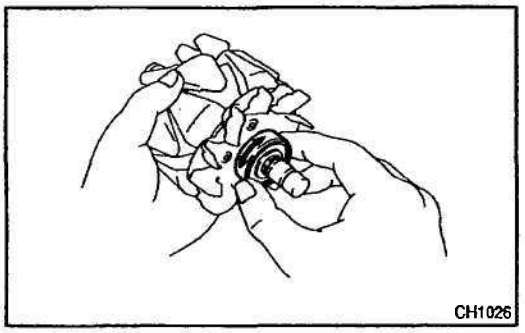

11. INSPECT REAR BEARING
Check that the bearing is not rough or worn.

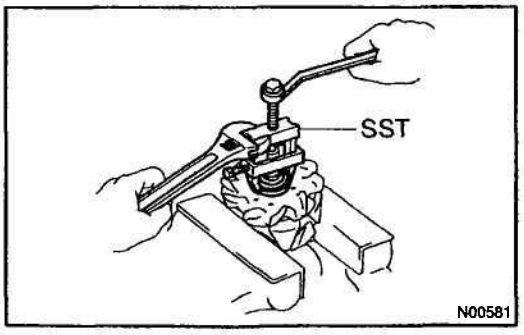

12. IF NECESSARY, REPLACE REAR BEARING
(a) Using SST, remove the bearing cover (outside) and bearing.
SST 09820–00021

NOTICE:
Be careful not to damage the fan.

(b) Remove the bearing cover (inside).

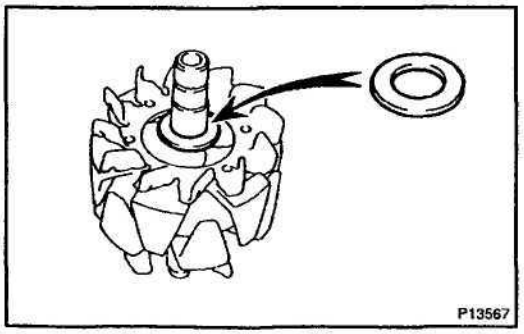

(c) Place the bearing cover (inside) on the rotor.

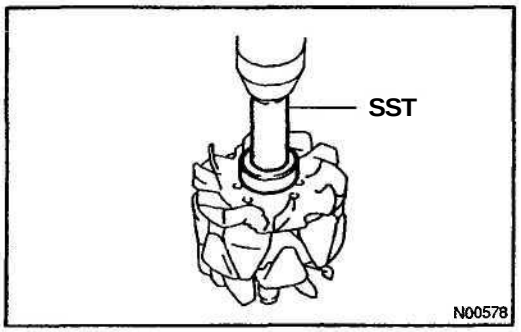

(d) Using SST and a press, press in a new bearing.
SST 09820–00030

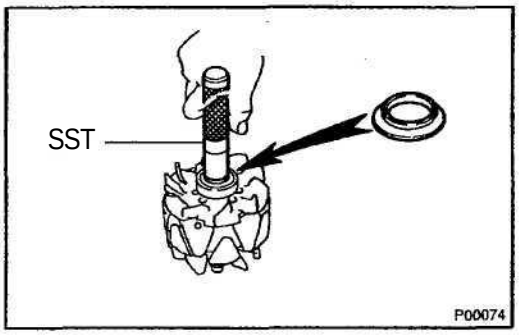

(e) Using SST, push in the bearing cover (outside).
SST 09285–76010

CH0CB–01

REASSEMBLY

1. INSTALL ROTOR TO DRIVE END FRAME

(a) Place the drive end frame on the pulley.

(b) Install the rotor to the drive end frame.

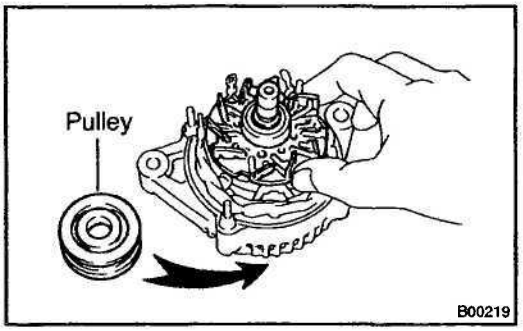

2. INSTALL RECTIFIER END FRAME

(a) Place the generator washer on the rotor.

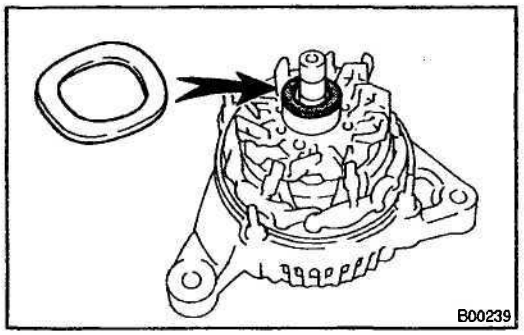

(b) Using a 29 mm socket wrench and press, slowly press in the rectifier end frame.

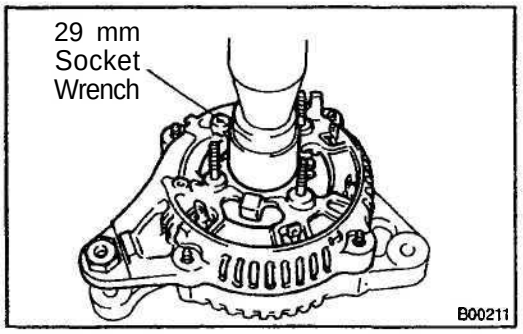

(c) Install the wire clip and 4 nuts.

Torque:
Nut A 4.5 N·m (46 kgf·cm, 40 in.·lbf)
Nut B 5.4 N·m (55 kgf·cm, 48 in.·lbf)

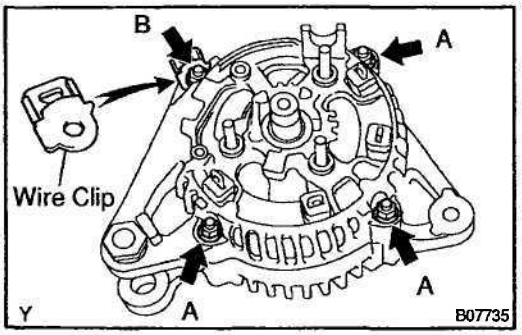

3. INSTALL PULLEY

(a) Install the pulley to the rotor shaft by tightening the pulley nut by hand.

(b) Hold SST (A) with a torque wrench, and tighten SST (B) clockwise to the specified torque.

SST 09820–63010

Torque: 39 N·m (400 kgf-cm, 29 ft·lbf)

(c) Check that SST (A) is secured to the pulley shaft.

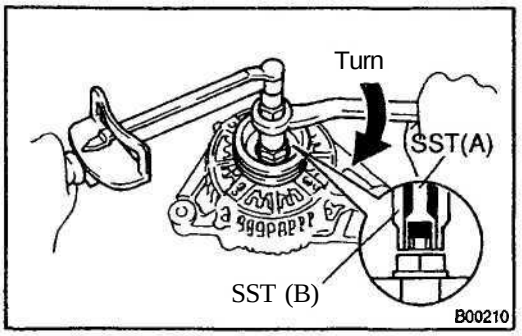

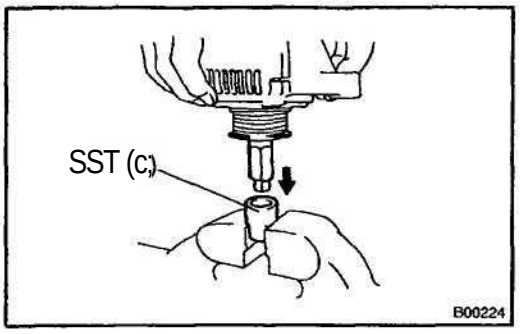

(d) Mount SST (C) in a vise.
(e) Insert SST (B) into SST (C), and attach the pulley nut to SST (C).

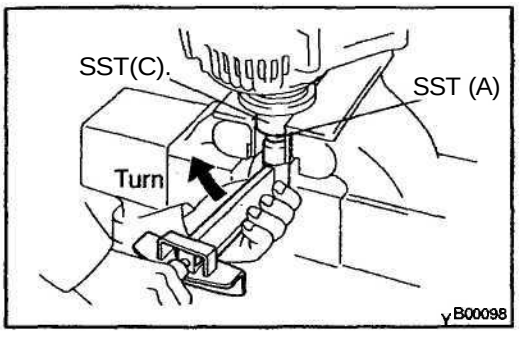

(f) To torque the pulley nut, turn SST (A) in the direction shown in the illustration.
Torque: 111 N·m (1,125 kgf·cm, 81 ft-lbf)
(g) Remove the generator from SST (C).

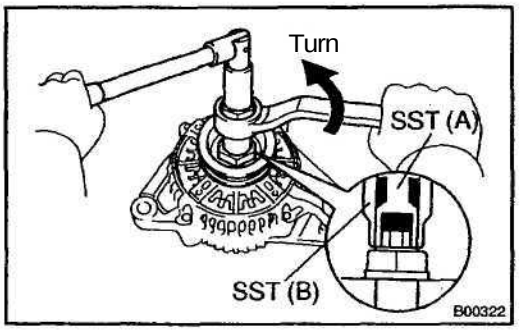

(h) Turn SST (B), and remove SST (A and B).

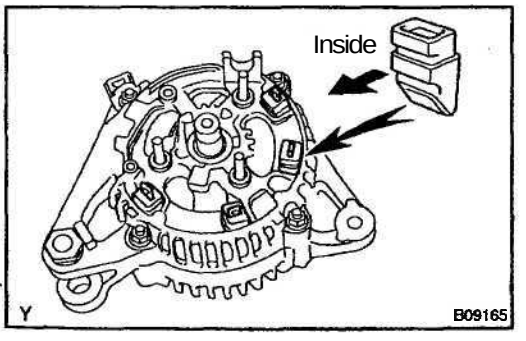

4. INSTALL RECTIFIER HOLDER
(a) Install the 4 rubber insulators on the lead wires.
NOTICE:
Be careful of the rubber insulators installation direction.

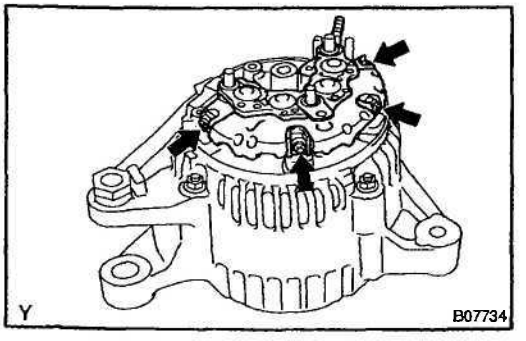

(b) Install the rectifier holder while pushing it with the 4 screws
Torque: 2.9 N·m (30 kgf·cm, 26 in.·lbf)

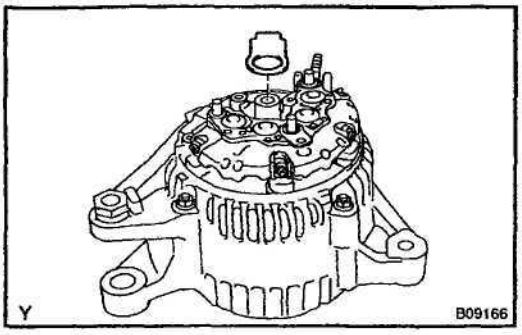

5. INSTALL VOLTAGE REGULATOR AND BRUSH HOLDER

(a) Place the seal plate on the rectifier end frame.

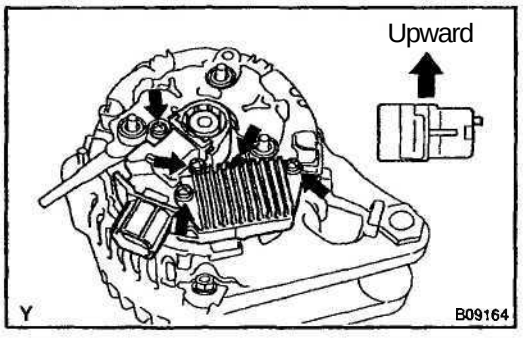

(b) Place the voltage regulator and brush holder on the rectifier end frame.

NOTICE:

Be careful of the holder installation direction.

(c) Install the 5 screws.

Torque: 2.0 N·m (20 kgf·cm, 18 in.·lbf)

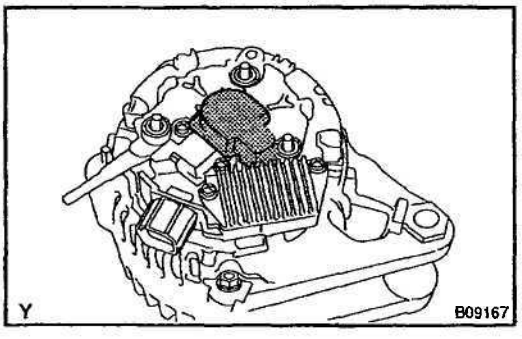

(d) Place the brush holder cover on the brush holder.

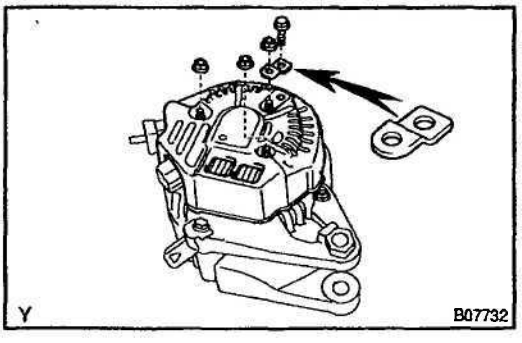

6. INSTALL REAR END COVER

(a) Install the end cover and plate terminal with the bolt and 3 nuts.

Torque:

Nut 4.4 N·m (45 kgf·cm, 39 in.·lbf)

Bolt 3.9 N·m (39 kgf·cm, 35 in.·lbf)

(b) Install the terminal insulator with the nut.

Torque: 4.1 N·m (42 kgf·cm, 36 in.·lbf)

7. CHECK THAT ROTOR ROTATES SMOOTHLY

CH026-03

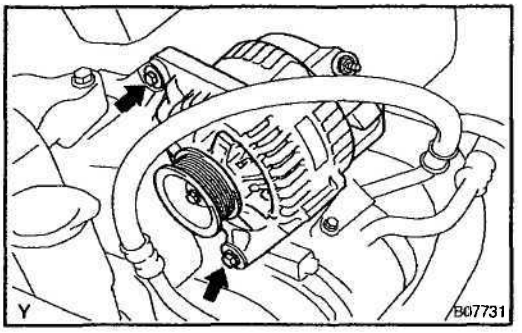

INSTALLATION

1. INSTALL GENERATOR

(a) Install the 2 bolts and generator.

Torque:
14 mm head 25 N·m (250 kgf-cm, 18 ft·lbf)
17 mm head
1ZZ-FE: 54 N·m (550 kgf cm, 40 ft·lbf)
2ZZ–GE: 58 N·m (590 kgf·cm, 43 ft·lbf)

(b) 2ZZ–GE:

Install the generator bracket with the 2 bolts.

Torque: 29 N·m (295 kgf·cm, 21ft lbf)

(c) Connect the generator connector.

(d) Connect the generator wire, and install the nut and rubber cap.

(e) Connect the generator wire, and install the rubber cap and nut.

2. INSTALL DRIVE BELT

CLUTCH

TROUBLESHOOTING CL–1
CLUTCH PEDAL CL-2
CLUTCH MASTER CYLINDER CL–4
CLUTCH RELEASE CYLINDER CL–9
CLUTCH UNIT CL–14

CL

TROUBLESHOOTING

PROBLEM SYMPTOMS TABLE

CL02N–04

Use the table below to help you find the cause of the problem. The numbers indicate the priority of the likely cause of the problem. Check each part in order. If necessary, replace these parts.

Symptom	Suspect Area	See page
Clutch grabs/chatters	1. Engine mounting (Loosen)	–
	2. Clutch disc (Runout is excessive)	CL–14
	3. Clutch disc (Oily)	CL–14
	4. Clutch disc (Worn out)	CL–14
	5. Clutch disc torsion rubber (Damaged)	CL–14
	6. Clutch disc (Glazed)	CL–14
	7. Diaphragm spring (Out of tip alignment)	CL–14
Clutch pedal spongy	1. Clutch line (Air in line)	–
	2. Master cylinder cup (Damaged)	CL–4
	3. Release cylinder cup (Damaged)	CL-9
Clutch noisy	1. Release bearing (Worn, dirty, or damaged)	CL–14
	2. Clutch disc torsion rubber (Damaged)	CL–14
Clutch slips	1. Clutch pedal (Free play out of adjustment)	CL-2
	2. Clutch disc (Oily)	CL–14
	3. Clutch disc (Worn out)	CL–14
	4. Diaphragm spring (Damaged)	CL–14
	5. Pressure plate (Distortion)	CL–14
	6. Flywheel (Distortion)	–
Clutch does not disengage	1. Clutch pedal (Free play out of adjustment)	CL-2
	2. Clutch line (Air in line)	–
	3. Master cylinder cup (Damaged)	CL–4
	4. Release cylinder cup (Damaged)	CL-9
	5. Clutch disc (out of true)	CL–14
	6. Clutch disc (Runout is excessive)	CL–14
	7. Clutch disc (Lining broken)	CL–14
	8. Clutch disc (Dirty or burned)	CL–14
	9. Clutch disc (Oily)	CL–14
	10. Clutch disc (Lack of spline grease)	CL–14
	11. Diaphragm spring (Damaged)	CL–14
	12. Diaphragm spring (Out of tip alignment)	CL–14
	13. Pressure plate (Distortion)	CL–14

CL09K-01

CLUTCH PEDAL

INSPECTION

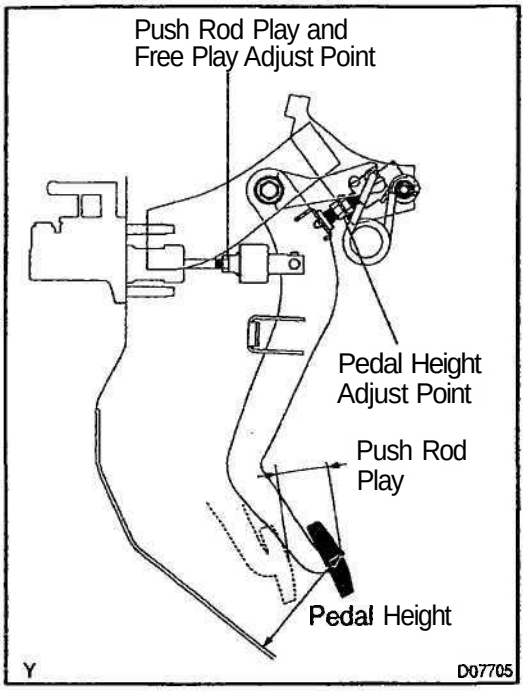

1. CHECK PEDAL HEIGHT

Pedal height from asphalt sheet:
Standard pedal:
135.6 – 145.6 mm (5.339 - 5.732 in.)
Sport pedal:
136.9 – 146.9 mm (5.390 - 5.783 in.)

2. IF NECESSARY, ADJUST PEDAL HEIGHT

(a) Loosen the lock nut and turn the stopper bolt until the height is correct.
(b) Tighten the lock nut.

3. CHECK PEDAL FREE PLAY AND PUSH ROD PLAY

(a) Depress the pedal until clutch resistance begins to be felt.
Pedal free play: 1.0 - 5.0 mm (0.039 - 0.197 in.)
(b) Gently push on the pedal until the resistance begins to increase a little.
Push rod play at pedal top:
5.0 – 15.0 mm (0.197 - 0.591 in.)

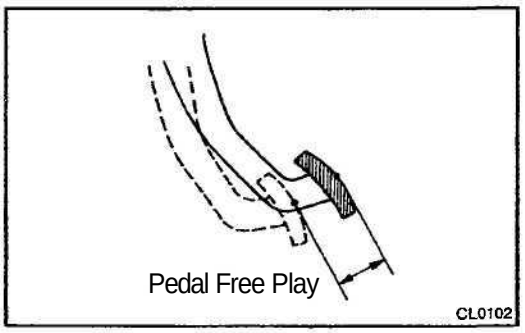

4. IF NECESSARY, ADJUST PEDAL FREE PLAY AND PUSH ROD PLAY

(a) Loosen the lock nut and turn the push rod until the free play and push rod play are correct.
(b) Tighten the lock nut.
(c) After adjusting the pedal free play, check the pedal height.

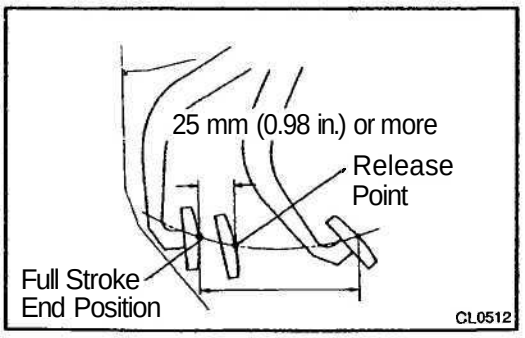

5. CHECK CLUTCH RELEASE POINT

(a) Pull the parking brake lever and install wheel stopper.
(b) Start and idle the engine.
(c) Without depressing the clutch pedal, slowly shift the shift lever into reverse position until the gears contact.
(d) Gradually depress the clutch pedal and measure the stroke distance from the point the gear noise stops (release point) to the full stroke end position.
Standard distance: 25 mm (0.98 in.) or more
(From pedal stroke end position to release point)

If the distance is not as specified, perform the following operations.

- Inspect pedal height.
- Inspect push rod play and pedal free play.
- Bleed the clutch line.
- Inspect the clutch cover and disc.

CL

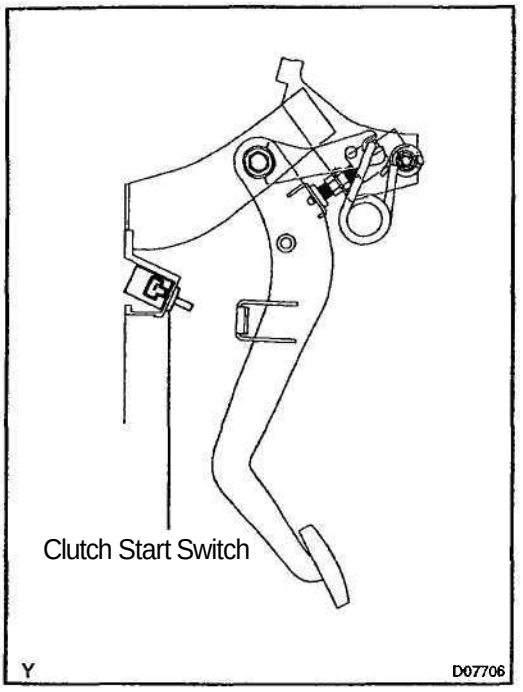

6. CHECK CLUTCH START SYSTEM

(a) Check that the engine does not start when the clutch pedal is released.

(b) Check that the engine starts when the clutch pedal is fully depressed.

If necessary, replace the clutch start switch.

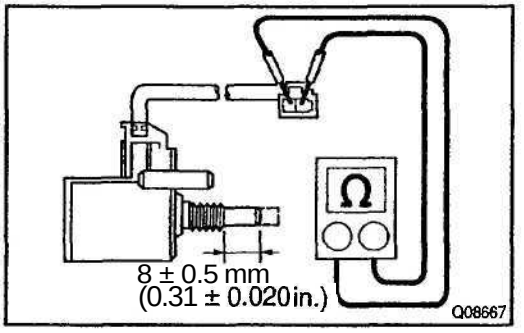

7. INSPECT CLUTCH START SWITCH CONTINUITY

Check the continuity between terminals when the switch is ON and OFF.

Switch position	Condition
ON (pushed)	Continuity
OFF (free)	No continuity

CL

CLUTCH MASTER CYLINDER

COMPONENTS

CL09E-02

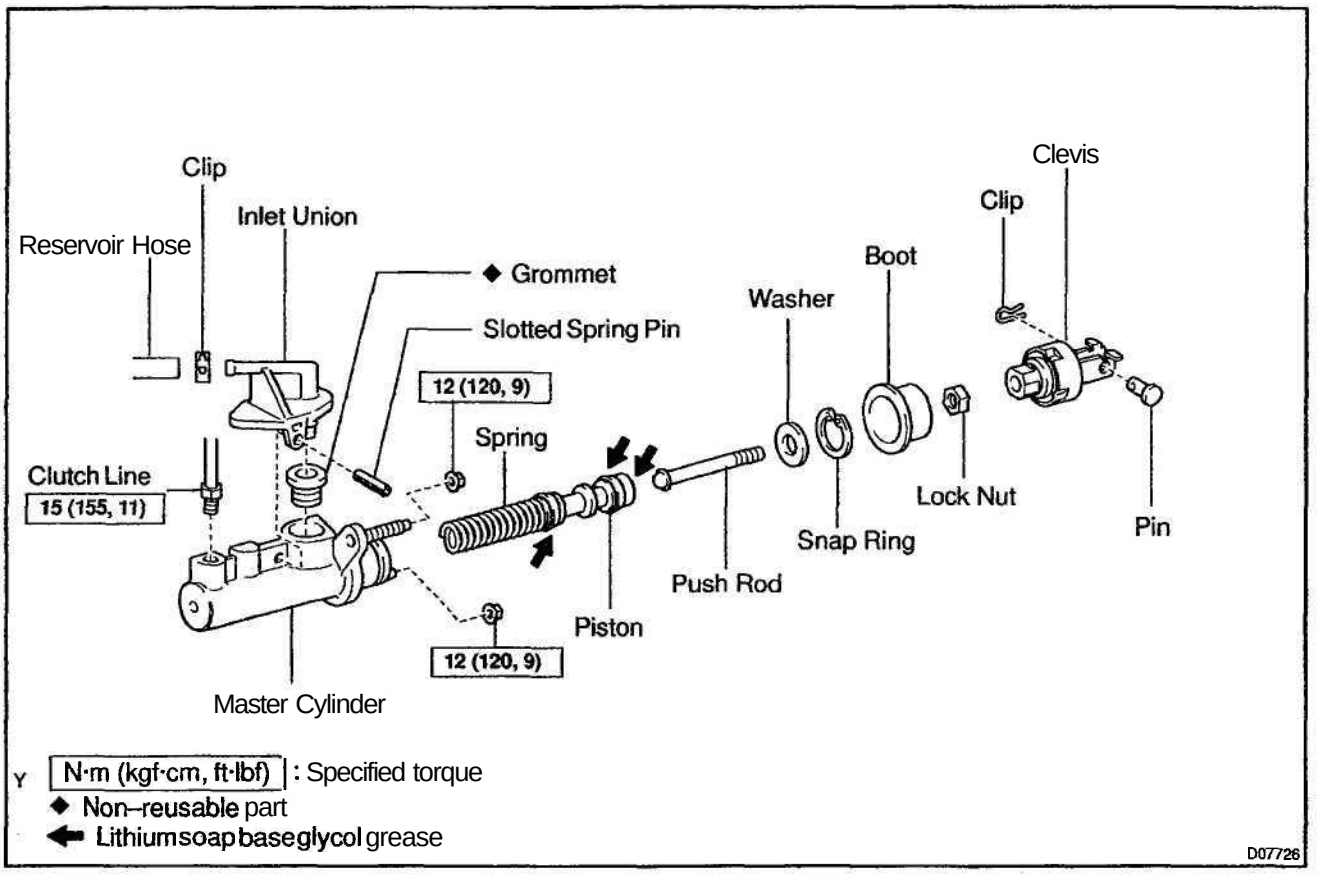

CL

CL017-04

REMOVAL

1. REMOVE BRAKE BOOSTER (See page BR–15)

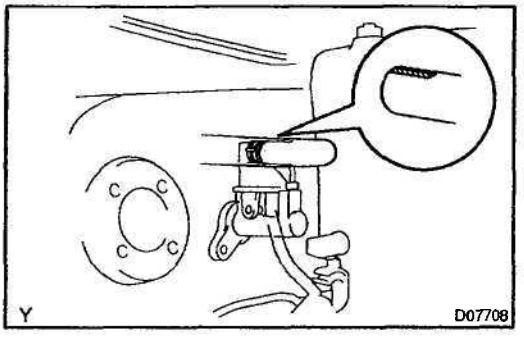

2. DISCONNECT RESERVOIR HOSE

(a) Using pliers, disconnect the clip.
(b) Disconnect the reservoir hose from the inlet union.
(c) Use a container to catch the fluid.

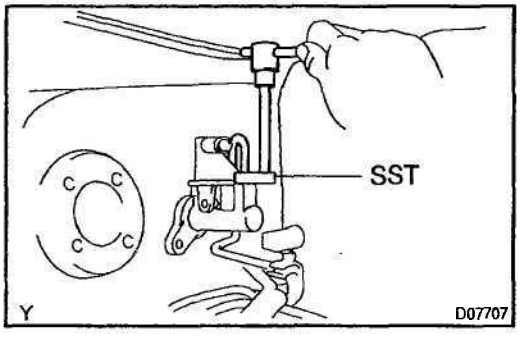

3. DISCONNECT CLUTCH LINE

(a) Using SST, disconnect the clutch line.
SST 09023–00100
(b) Use a container to catch the fluid.

4. REMOVE CLIP AND PIN

Using needle–nose pliers, remove the clip and pin.

5. REMOVE 2 MOUNTING NUTS AND PULL OUT MASTER CYLINDER

CL

CL69L-01

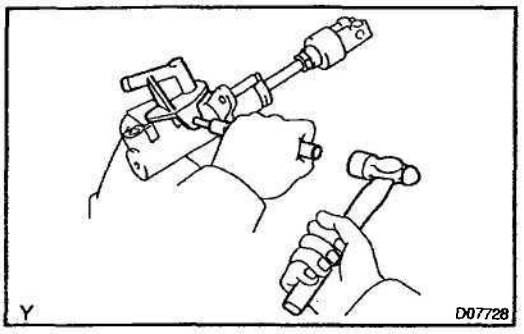

DISASSEMBLY

1. REMOVE INLET UNION

(a) Using a pin punch (3 mm) and hammer, drive out the slotted spring pin.

(b) Remove the inlet union.

(c) Remove the grommet.

2. REMOVE CLEVIS

Loosen the lock nut to remove the clevis and remove the lock nut.

3. REMOVE BOOT FROM CYLINDER

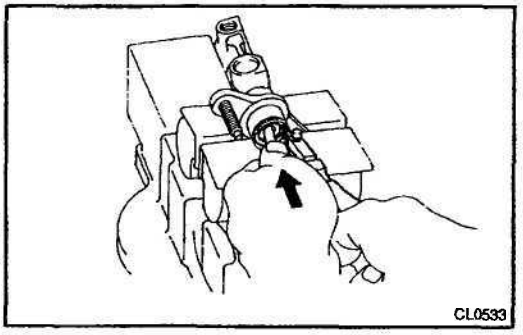

4. REMOVE PUSH ROD

(a) While pushing the push rod, using snap ring pliers, remove the snap ring.

(b) Pull out the push rod and washer.

5. REMOVE PISTON WITH SPRING FROM CYLINDER

CL

CL09M-01

REASSEMBLY

1. **COAT PARTS WITH LITHIUM SOAP BASE GLYCOL GREASE, AS SHOWN IN ILLUSTRATION**
2. **INSERT PISTON WITH SPRING INTO CYLINDER**

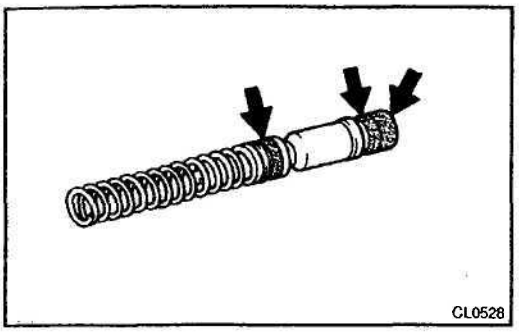

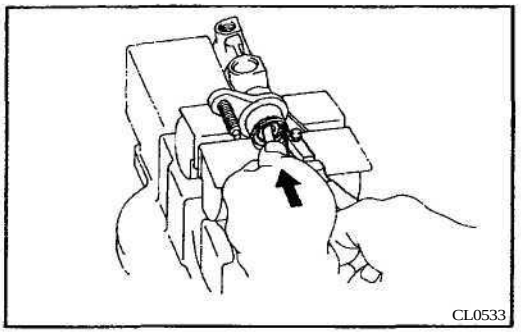

3. **INSTALL PUSH ROD**

(a) Install the washer to the push rod.

(b) Push the push rod into the piston, using snap ring pliers, install the snap ring.

4. **INSTALL BOOT TO CYLINDER**
5. **TEMPORARILY INSTALL LOCK NUT AND CLEVIS**

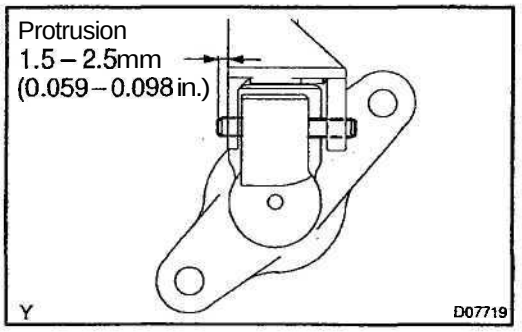

6. **INSTALL INLET UNION**

(a) Install a new grommet.

(b) Install the inlet union.

(c) Using a pin punch (3 mm) and hammer, drive in the slotted spring pin.

CL

CL05G-02

INSTALLATION

1. **INSTALL MASTER CYLINDER WITH 2 MOUNTING NUTS**
   Torque: 12 N m (120 kgf·cm, 9 ft·lbf)
2. **INSTALL PIN AND CLIP**

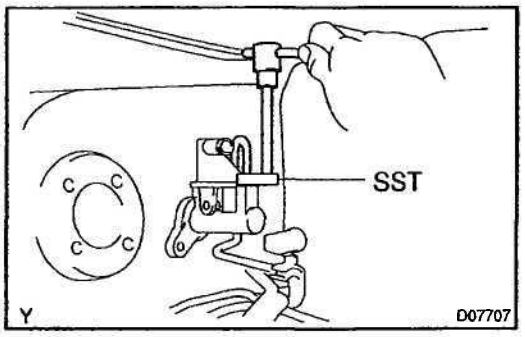

3. **CONNECT CLUTCH LINE**

Using SST, connect the clutch line.

SST 09023–00100

Torque: 15 N·m (155 kgf·cm, 11 ft·lbf)

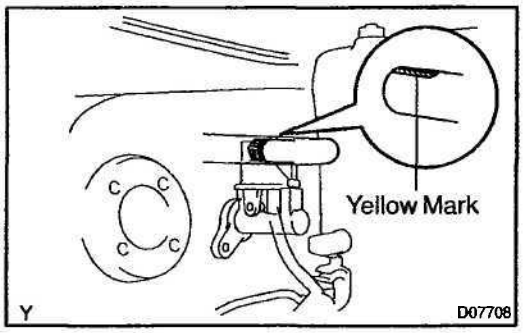

4. **CONNECT RESERVOIR HOSE**

(a) Connect the reservoir hose to the inlet union.

NOTICE:

Facing the yellow mark upwards.

(b) Using pliers, connect the clip.

5. **INSTALL BRAKE BOOSTER (See page BR–16)**
6. **FILL BRAKE RESERVOIR WITH BRAKE FLUID AND BLEED CLUTCH SYSTEM (See page BR–4)**
7. **ADJUST CLUTCH PEDAL (See page CL-2)**
8. **CHECK FOR LEAKS**

CL

CLUTCH RELEASE CYLINDER

COMPONENTS

CL02U-04

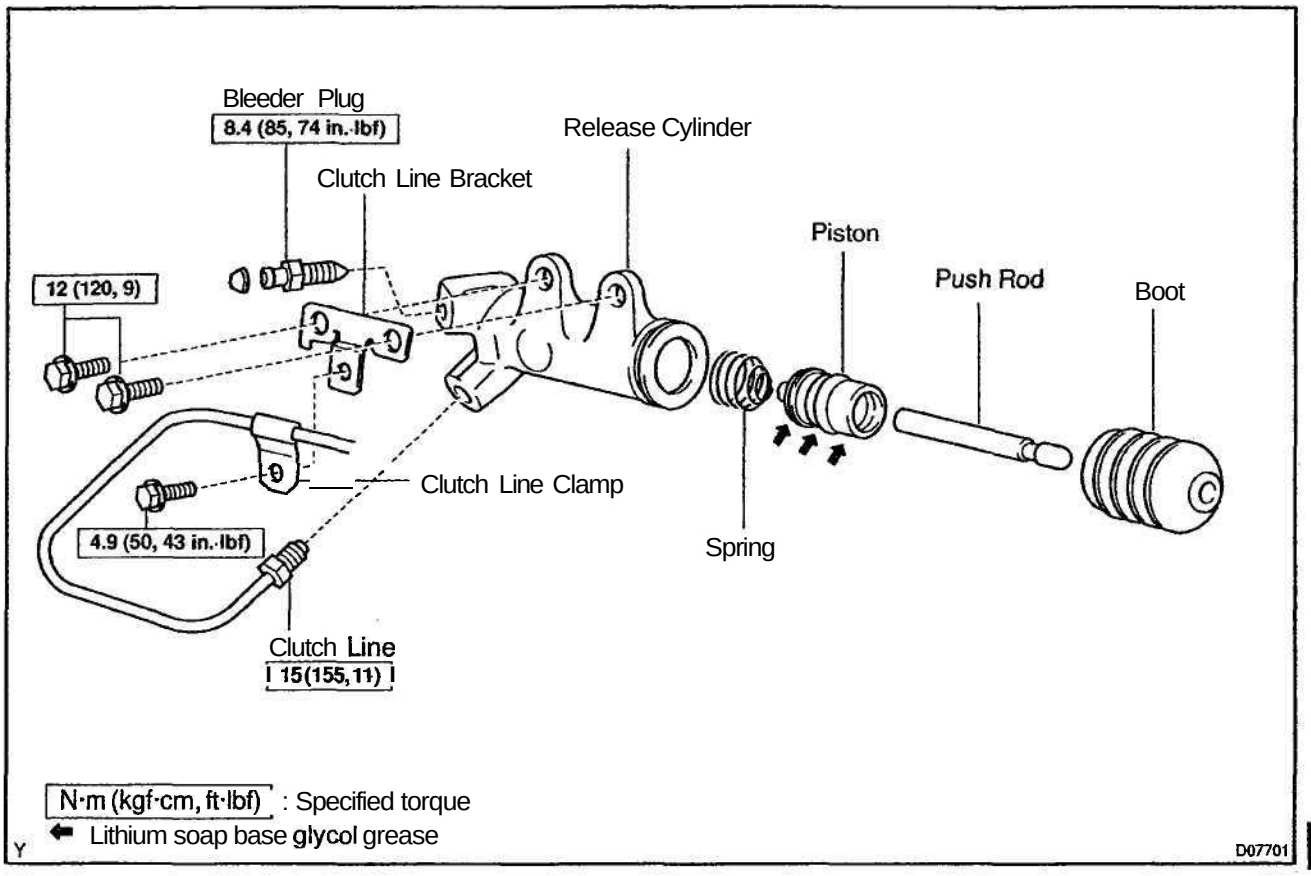

CL

CL09H-01

REMOVAL

1. DISCONNECT CLUTCH LINE

(a) Raise the vehicle.

CAUTION:

Make sure that the vehicle is securely supported.

(b) Remove the LH and RH engine under covers.

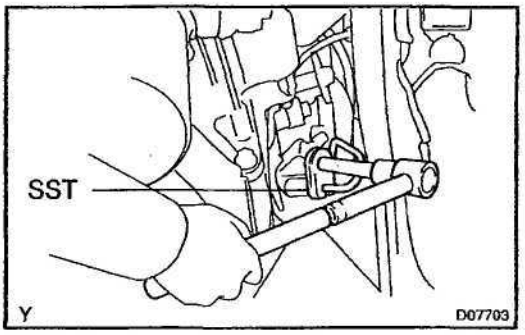

(c) Using SST, disconnect the clutch line.
SST 09023-00100

(d) Use a container to catch the fluid.

(e) Lower the vehicle.

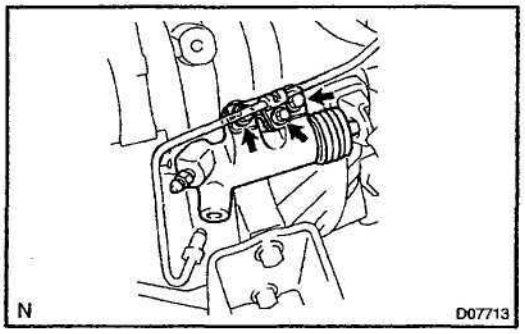

2. REMOVE RELEASE CYLINDER

(a) Remove the air cleaner case assembly with the air hose.

(b) Remove the clutch line clamp set bolt.

(c) Remove the 2 bolts, clutch line bracket and release cylinder.

CL

CL02F-03

DISASSEMBLY

1. REMOVE BOOT AND PUSH ROD

(a) Pull out the boot with the push rod.

(b) Remove the boot from the push rod.

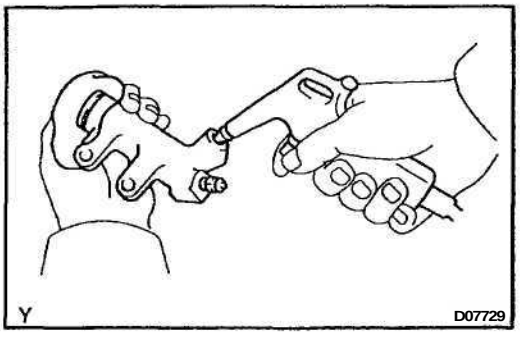

2. REMOVE PISTON AND SPRING

Using compressed air, remove the piston with the spring from the cylinder.

NOTICE:

- **Blowing off the air may cause the piston's jump–out. When removing the piston, hold it with your hand using a waste cloth.**
- **Take care not to splash brake fluid when air–blowing.**

3. REMOVE BLEEDER PLUG

CL02G-03

REASSEMBLY

1. **INSTALL BLEEDER PLUG**
   Torque: 8.4 N·m (85 kgf·cm, 74 in.·lbf)

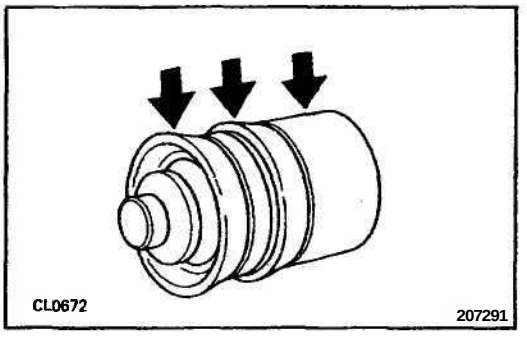

2. **COAT PISTON WITH LITHIUM SOAP BASE GLYCOL GREASE, AS SHOWN**
3. **INSTALL PISTON AND SPRING INTO CYLINDER**
4. **INSTALL BOOT AND PUSH ROD**

(a) Install the push rod to the boot.

(b) Install the boot with the push rod to the cylinder.

CL091-01

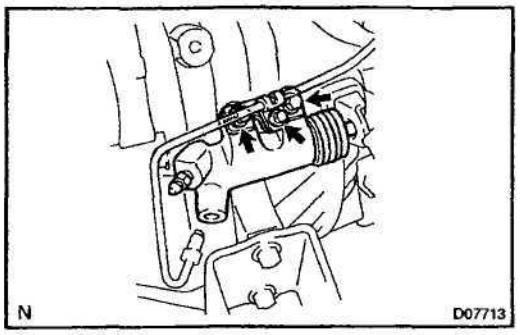

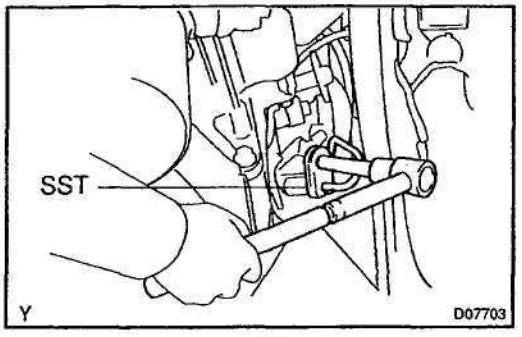

INSTALLATION

1. INSTALL RELEASE CYLINDER

(a) Install the release cylinder and clutch line bracket with the 2 bolts.
Torque: 12 N·m (120 kgf·cm, 9 tt-lbf)

(b) Install the clutch line clamp to the clutch line bracket with the bolt.
Torque: 4.9 N·m (50 kgf·cm, 43 in.·lbf)

(c) Install the air cleaner case assembly with the air hose.

2. CONNECT CLUTCH LINE AND BLEED CLUTCH SYSTEM

(a) Raise the vehicle.

CAUTION:
Make sure that the vehicle is securely supported.

(b) Using SST, connect the clutch line.
SST 09023–00100
Torque: 15 N·m (155 kgf·cm, 11 ft·lbf)

(c) Fill the brake reservoir tank with brake fluid and bleed clutch system.

(d) Check for the leaks.

(e) Install the LH and RH engine under covers.

(f) Lower the vehicle.

CLUTCH UNIT

COMPONENTS

CL02Z-04

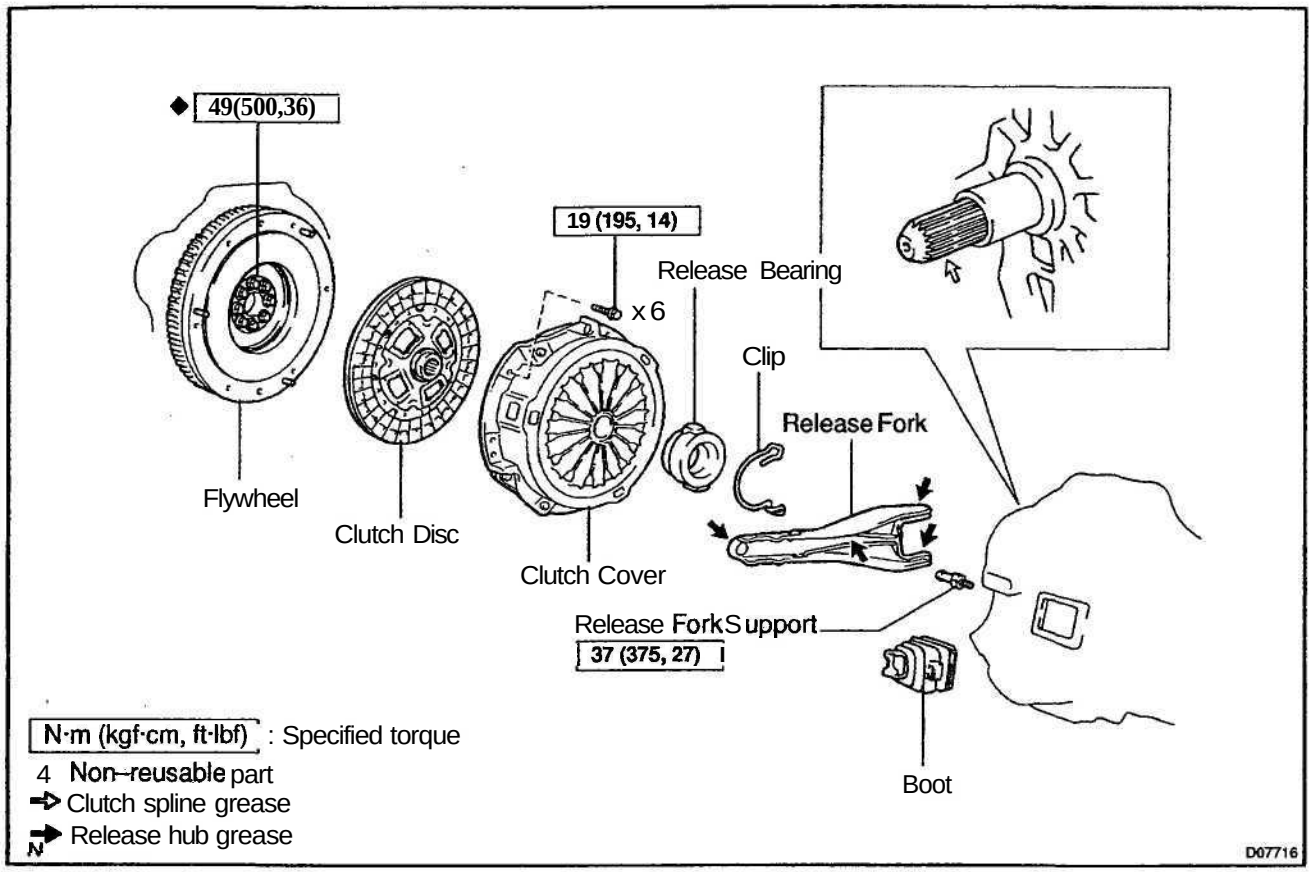

CL030-04

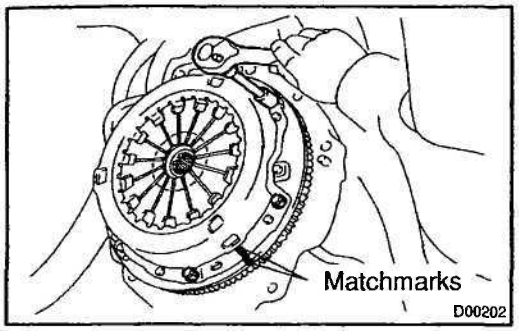

REMOVAL

1. REMOVE TRANSAXLE FROM ENGINE
(C56: See page MX–4)
(C60: See page MX–4)

2. REMOVE CLUTCH COVER AND DISC

(a) Align the matchmark on the clutch cover with the one on the flywheel.

(b) Loosen each set bolt one turn at a time until spring tension is released.

(c) Remove the set bolts, and pull off the clutch cover with the clutch disc.

NOTICE:
Do not drop the clutch disc.

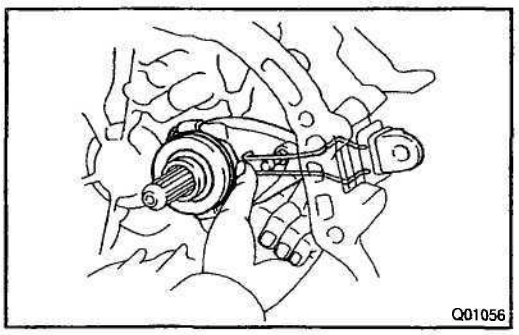

3. REMOVE RELEASE BEARING AND FORK FROM TRANSAXLE

Remove the release bearing with the fork together and then separate them.

4. REMOVE RELEASE FORK SUPPORT AND BOOT

CL031-04

INSPECTION

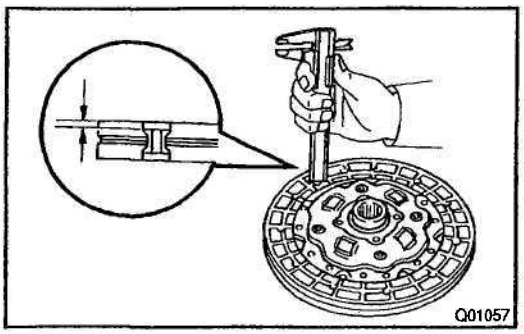

1. INSPECT CLUTCH DISC FOR WEAR OR DAMAGE

Using vernier calipers, measure the rivet head depth.

Minimum rivet depth: 0.3 mm (0.012 in.)

If necessary, replace the clutch disc.

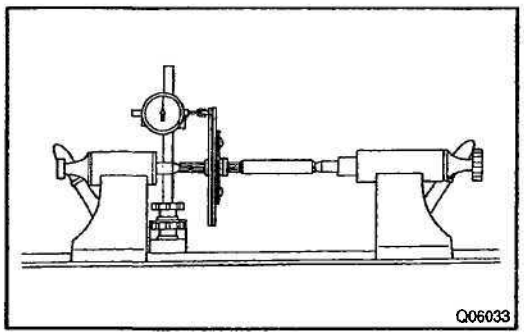

2. INSPECT CLUTCH DISC RUNOUT

Using a dial indicator, check the disc runout.

Maximum runout: 0.8 mm (0.031 in.)

If necessary, replace the clutch disc runout.

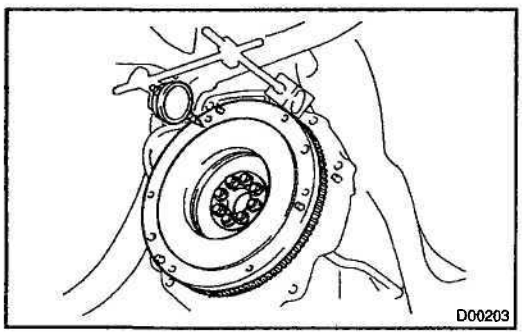

3. INSPECT FLYWHEEL RUNOUT

Using a dial indicator, check the flywheel runout.

Maximum runout: 0.1 mm (0.004 in.)

If necessary, replace the flywheel.

Torque: 49 N·m (500 kgf·cm, 36 ft·lbf)

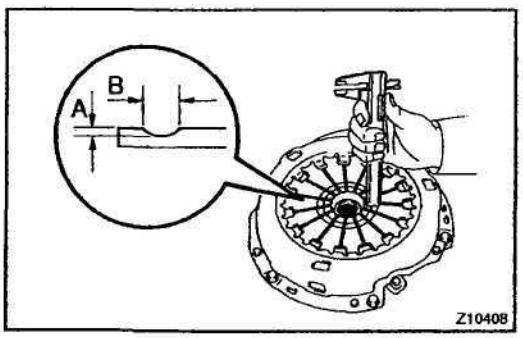

4. INSPECT DIAPHRAGM SPRING FOR WEAR

Using vernier calipers, measure the diaphragm spring for depth and width of wear.

Maximum:

A (Depth): 0.5 mm (0.020 in.)

B (Width): 6.0 mm (0.236 in.)

If necessary, replace the clutch cover.

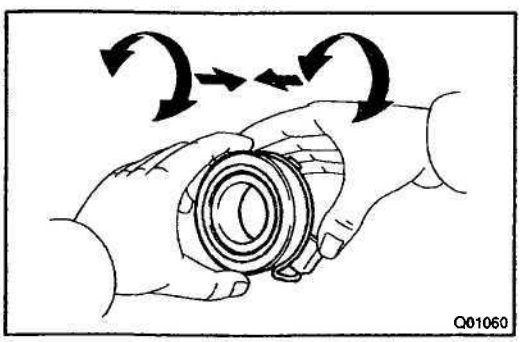

5. INSPECT RELEASE BEARING

Turn the bearing by hand while applying force in the axial direction.

HINT:

The bearing is permanently lubricated and requires no cleaning or lubrication.

If necessary, replace the release bearing.

CL032-05

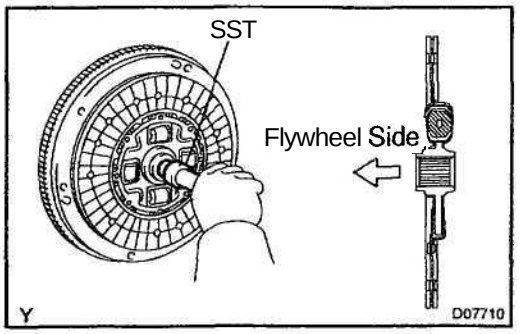

INSTALLATION

1. INSTALL CLUTCH DISC AND CLUTCH COVER ON FLYWHEEL

(a) Insert SST in the clutch disc, then insert them in the flywheel.

SST 09301–00210

HINT:

Take care not to insert clutch disc in the wrong direction.

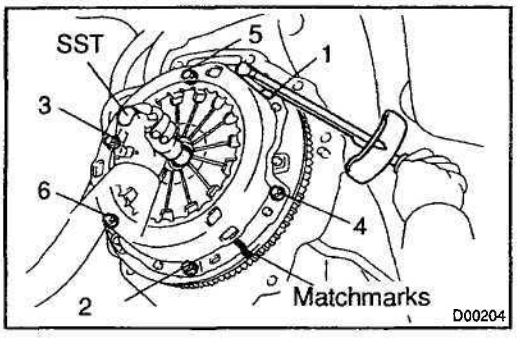

(b) Align the matchmarks on the clutch cover and flywheel.

(c) Following the procedures shown in the illustration, tighten the 6 bolts in the order starting the bolt locating near the knock pin on the top.

Torque: 19 N·m (195 kgf·cm, 14 ft·lbf)

HINT:

- Following the order in the illustration, tighten the bolts at a time evenly.
- Move SST up and down, right and left lightly, after checking that the disc is in the center, tighten the bolts.

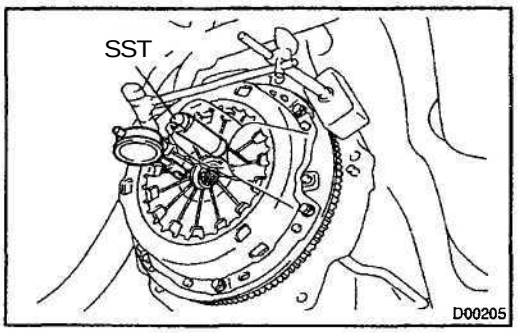

2. CHECK DIAPHRAGM SPRING TIP ALIGNMENT

Using a dial indicator with roller instrument, check the diaphragm spring tip alignment.

Maximum non–alignment: 0.5 mm (0.020 in.)

If alignment is not as specified, using SST, adjust the diaphragm spring tip alignment.

SST 09333–00013

3. INSTALL BOOT AND RELEASE FORK SUPPORT TO TRANSAXLE

Torque: 37 N·m (375 kgf·cm, 27 ft·lbf)

4. APPLY RELEASE HUB GREASE

Apply release hub grease to the release fork and hub contact, release fork and push rod contact and release fork pivot points.

Sealant:

Part No. 08887–01806, RELEASE HUB GREASE or equivalent

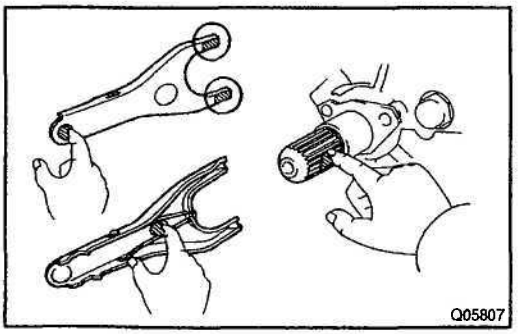

5. APPLY CLUTCH SPRING GREASE

Apply clutch spline grease to the input shaft spline.

Sealant:

Part No. 08887–01706, CLUTCH SPLINE GREASE or equivalent

6. INSTALL RELEASE BEARING AND FORK TO TRANSAXLE

Install the bearing to the release fork, and then install them to the transaxle.

7. INSTALL TRANSAXLE TO ENGINE

(C56: See page MX–8)
(C60: See page MX–8)

– MEMO –

MANUAL TRANSAXLE (C56)

TROUBLESHOOTING MX–1
MANUAL TRANSAXLE UNIT MX–2
MANUAL TRANSAXLE ASSEMBLY MX-9
INPUT SHAFT MX-26
OUTPUT SHAFT MX-34
SHIFT AND SELECT LEVER SHAFT MX–44
DIFFERENTIAL CASE MX–45
SHIFT LEVER AND CONTROL CABLE MX–52

MX

TROUBLESHOOTING

PROBLEM SYMPTOMS TABLE

Use the table below to help you find the cause of the problem. The numbers indicate the priority of the likely cause of the problem. Check each part in order. If necessary, replace parts.

Symptom	Suspect Area	See page
Noise	1. Oil (Level low)	MX–4
	2. Oil (Wrong)	MX–4
	3. Gear (Worn or damaged)	MX–9
	4. Bearing (Worn or damaged)	MX–9
Oil leakage	1. Oil (Level too high)	MX–4
	2. Gasket (Damaged)	MX–4
	3. Oil seal (Worn or damaged)	MX–4
	4. O–Ring (Worn or damaged)	MX–4
Hard to shift or will not shift	1. Control cable (Faulty)	MX-52
	2. Synchronizer ring (Worn or damaged)	MX–4
		MX–29
		MX–38
	3. Shifting key spring (Damaged)	MX–4
		MX-29
		MX-38
Jumps out of gear	1. Locking ball spring (Damaged)	MX–4
	2. Gear shift fork (Worn)	MX–4
	3. Gear (Worn or damaged)	MX–4
	4. Bearing (Worn or damaged)	MX–4

MX

MANUAL TRANSAXLE UNIT

COMPONENTS

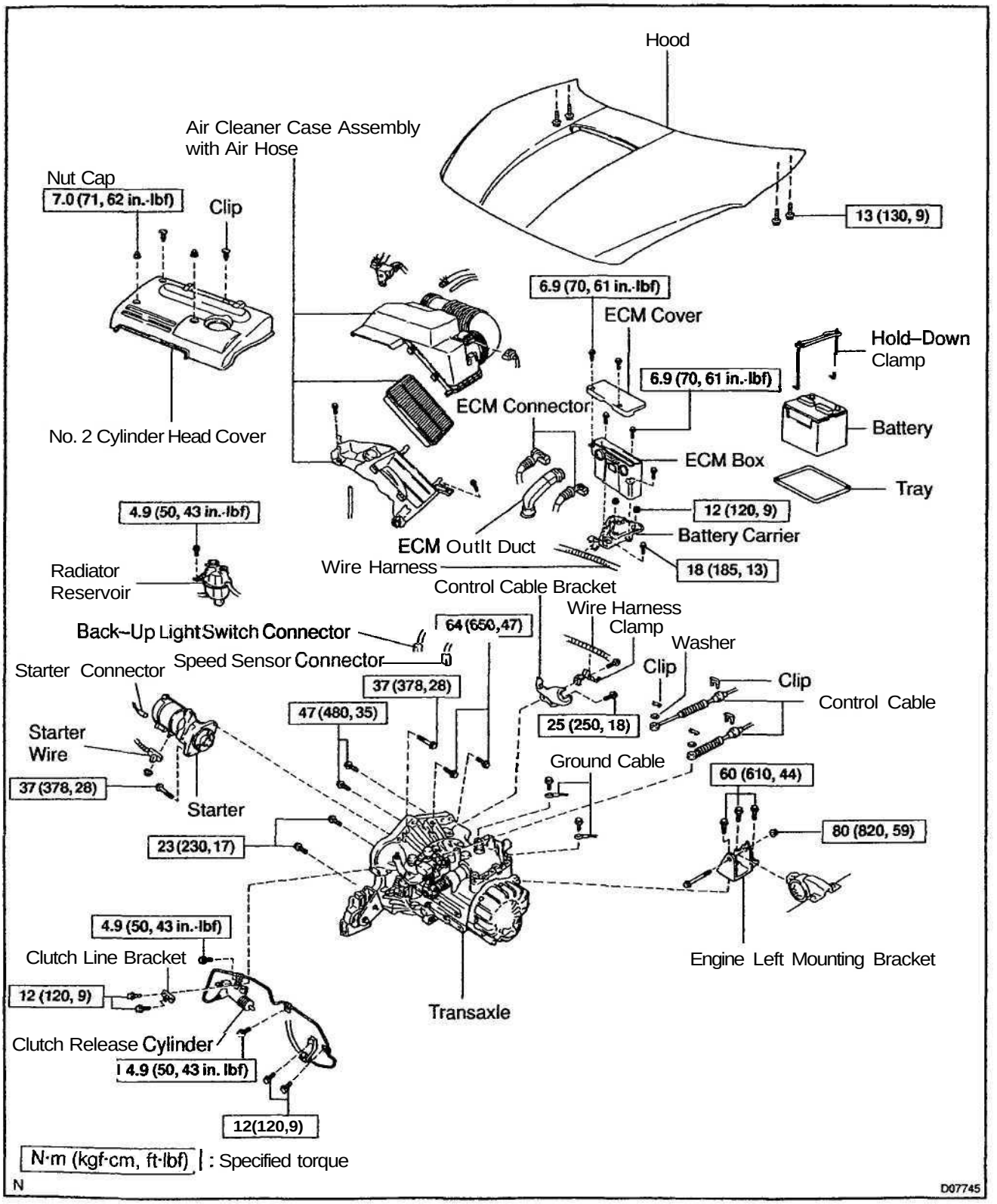

MX

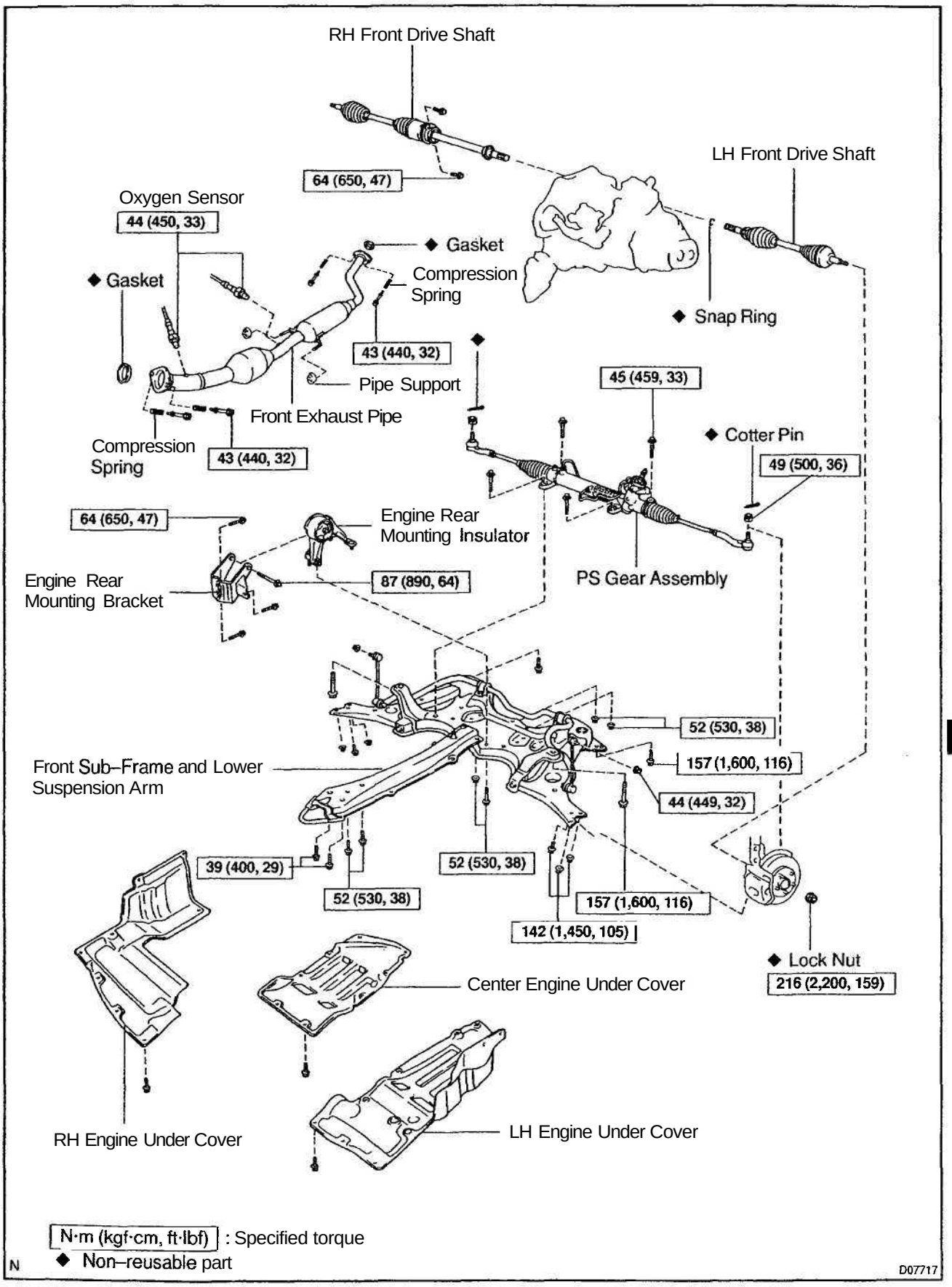

N·m (kgf·cm, ft·lbf) : Specified torque
◆ Non–reusable part

D07717

MX09G-01

REMOVAL

1. REMOVE HOOD

HINT:

At the time of installation, please refer to the following item.

Adjust the hood. (See page BO–9)

2. REMOVE NO. 2 CYLINDER HEAD COVER

Remove the 2 nut caps, clips and No. 2 cylinder head cover.

Torque: 7.0 N·m (71 kgf-cm, 62 in.·lbf)

3. DISCONNECT RADIATOR RESERVOIR

Remove the bolt and disconnect the radiator reservoir.

Torque: 4.9 N·m (50 kgf·cm, 43 in.·lbf)

4. REMOVE BATTERY

5. REMOVE AIR CLEANER CASE ASSEMBLY WITH AIR HOSE AND ECM BOX

(a) Remove the 2 bolts and ECM cover.

Torque: 6.9 N·m (70 kgf·cm, 61 in.·lbf)

(b) Disconnect the ECM connectors from the ECM.

(c) Remove the ECM outlet duct.

(d) Remove the air cleaner case assembly with the air hose.

(e) Remove the 3 bolts and ECM box.

Torque: 6.9 N·m (70 kgf·cm, 61 in.·lbf)

(f) Disconnect the wire harness, and remove the 2 nuts, bolt and battery carrier.

Torque:

Bolt: 18 N·m (185 kgf·cm, 13 tt-lbf)

Nut: 12 N·m (120 kgf·cm, 9 ft·lbf)

6. DISCONNECT CONTROL CABLE

(a) Remove the 2 clips and washers.

(b) Remove the 2 clips and disconnect the control cables from the transaxle.

MX

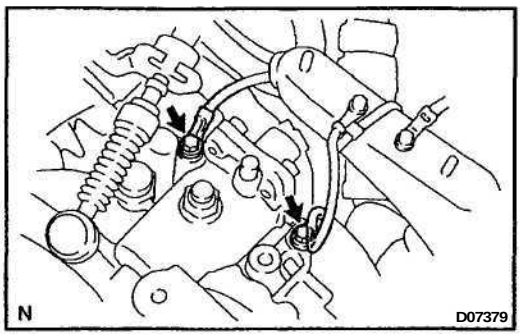

7. DISCONNECT GROUND CABLE

Remove the 2 set bolts of the 2 ground cables from the transaxle.

8. DISCONNECT SPEED SENSOR AND BACK-UP LIGHT SWITCH CONNECTORS

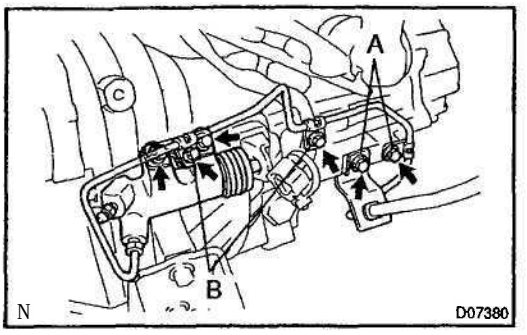

9. **DISCONNECT CLUTCH RELEASE CYLINDER**

(a) Remove the 4 set bolts of the clutch line.
Torque:
Bolt A: 12 N·m (120 kgf·cm, 9 ft·lbf)
Bolt B: 4.9 N·m (50 kgf·cm, 43 in.·lbf)

(b) Remove the 2 set bolts of the clutch release cylinder and clutch line bracket.
Torque: 12 N·m (120 kgf·cm, 9 ft·lbf)

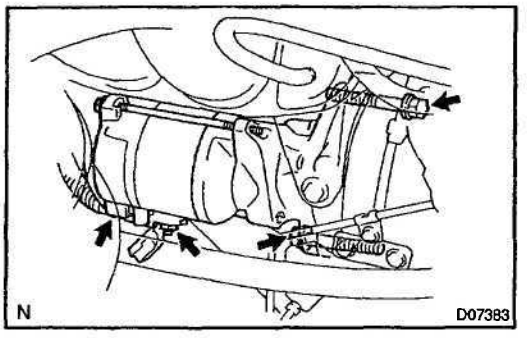

10. **REMOVE STARTER**

(a) Disconnect the starter connector.
(b) Remove the nut and disconnect the starter wire.
(c) Remove the 2 bolts and starter.
Torque: 37 N·m (378 kgf·cm, 28 ft·lbf)

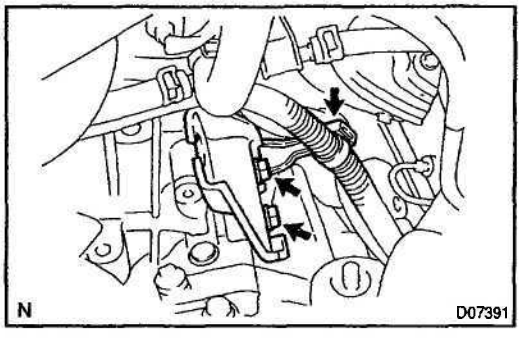

11. **REMOVE CONTROL CABLE BRACKET**

(a) Disconnect the wire harness from the clamp.
(b) Remove the 2 bolts, clamp and control cable bracket from the transaxle.
Torque: 25 N·m (250 kgf·cm, 18 ft·lbf)

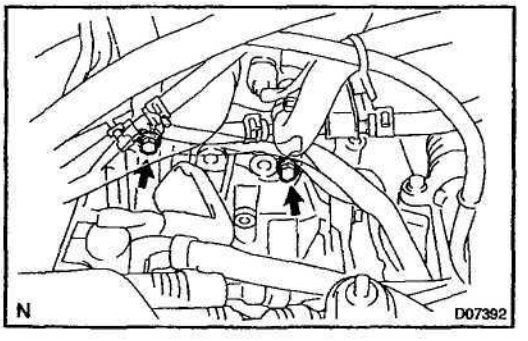

12. **REMOVE 2 TRANSAXLE UPPER SIDE MOUNTING BOLTS**
Torque: 64 N·m (650 kgf·cm, 47 ft·lbf)

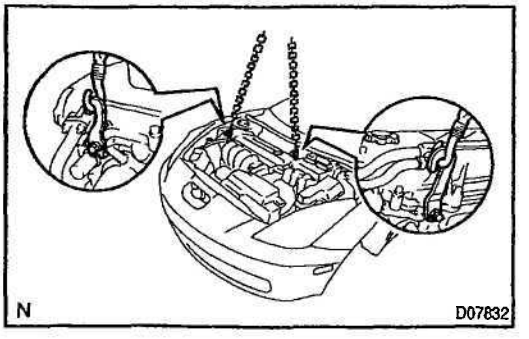

13. **ATTACH ENGINE SLING DEVICE TO ENGINE HANGER**

(a) Disconnect the 2 PCV hoses.
(b) Install the No. 1 and No. 2 engine hangers in the correct direction.
Parts No.:
No. 1 engine hanger: 12281-22021
No. 2 engine hanger: 12281-15040 or 12281-15050
Bolt: 91512–B1016
Torque: 38 N·m (387 kgf·cm, 28 ft·lbf)

(c) Attach the engine chain hoist to the engine hangers.

CAUTION:
Do not attempt to hang the engine by hooking the chain to any other part.

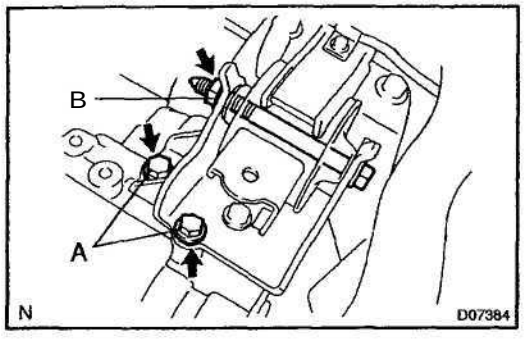

14. REMOVE ENGINE LEFT MOUNTING BRACKET 3 SET BOLTS AND NUT
Torque:
Bolt A: 60 N·m (610 kgf·cm, 44 ft·lbf)
Nut B: 80 N·m (820 kgf·cm, 59 ft·lbf)

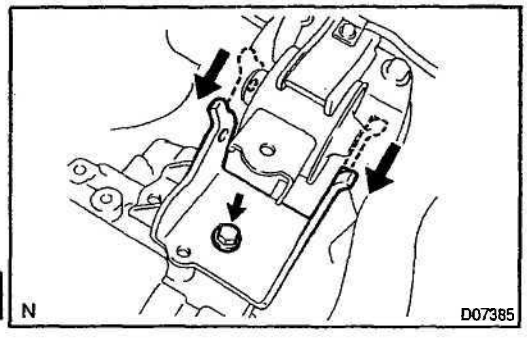

15. REMOVE ENGINE LEFT MOUNTING BRACKET
Lower the transaxle side, and remove the bolt and engine left mounting bracket.
Torque: 60 N·m (610 kgf·cm, 44 ft·lbf)

16. RAISE VEHICLE

CAUTION:
Make sure that the vehicle is securely supported.

17. REMOVE CENTER, LH AND RH ENGINE UNDER COVERS

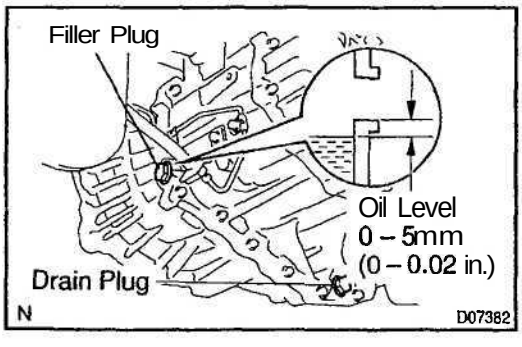

18. DRAIN TRANSAXLE OIL
Oil grade: API GL–4 or GL–5
Viscosity: SAE 75W-90
Capacity: 1.9 liters (2.0 US qts, 1.7 Imp. qts)
Torque: 39 N·m (400 kgf·cm, 29 ft·lbf)

19. REMOVE LH AND RH FRONT DRIVE SHAFTS (See page SA–18)

20. REMOVE FRONT EXHAUST PIPE

(a) Disconnect the 2 heated oxygen sensors.
Torque: 44 N·m (450 kgf·cm, 33 ft·lbf)

HINT:
At the time of installation, please refer to the following items.
- Before installing the heated oxygen sensor, twist the sensor wire counterclockwise 3 and 1/2 turns.
- After installing the heated oxygen sensor, check that the sensor wire is not twisted. If it is twisted, remove the heated oxygen sensor and reinstall it.

(b) Remove the 4 bolts, compression springs and 2 gaskets.
Torque: 43 N·m (440 kgf·cm, 32 ft·lbf)

MX

(c) Disconnect the front exhaust pipe from the pipe supports and remove it.

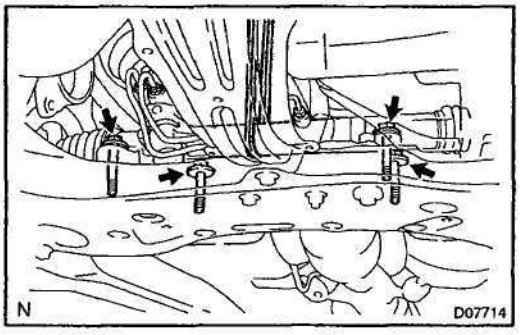

21. REMOVE FRONT SUB–FRAME AND LOWER SUSPENSION ARM

(a) Tie the PS gear assembly to the proper position with a code or an equivalent to suspend the assembly securely.

(b) Remove the 4 set bolts of the PS gear assembly.
Torque: 45 N·m (459 kgf·cm, 33 ft·lbf)

(c) Disconnect the LH and RH stabilizer bar links from the shock absorber. (See page SA–51)

(d) Remove the front sub–frame and lower suspension arm. (See page SA–42)

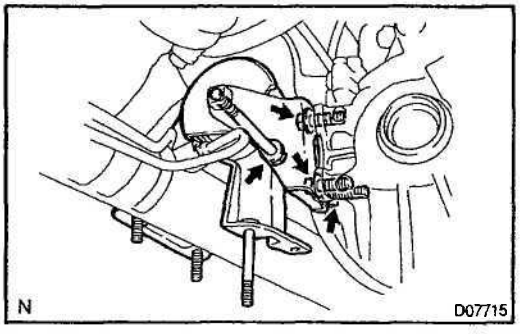

22. REMOVE ENGINE REAR MOUNTING INSULATOR AND BRACKET

(a) Remove the bolt and engine rear mounting insulator.
Torque: 87 N·m (890 kgf·cm, 64 tt-lbf)

(b) Remove the 3 bolts and engine rear mounting bracket.
Torque: 64 N·m (650 kgf·cm, 47 ft·lbf)

23. JACK UP TRANSAXLE SLIGHTLY

Using a transmission jack, support the transaxle.

MX

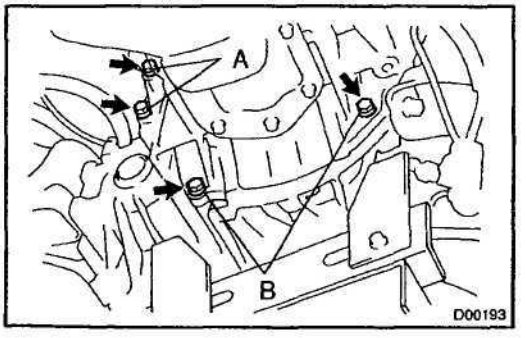

24. REMOVE 4 TRANSAXLE LOWER SIDE MOUNTING BOLTS
Torque:
Bolt A: 47 N·m (480 kgf·cm, 35 ft-lbf)
Bolt B: 23 N·m (230 kgf·cm, 17 ft-lbf)

25. REMOVE TRANSAXLE

Lower the engine left side and remove the transaxle from the engine.

HINT:

At the time of installation, please refer to the following items.

- Align the input shaft with the clutch disc and install the transaxle to the engine.
- Temporarily tighten the transaxle mounting bolts.

MX09H–01

INSTALLATION

Installation is in the reverse order of removal. (See page MX–4)

HINT:

After installation, check and inspect items as follows.

- Front wheel alignment. (See page SA–4)
- Do the road test.

MANUAL TRANSAXLE ASSEMBLY

COMPONENTS

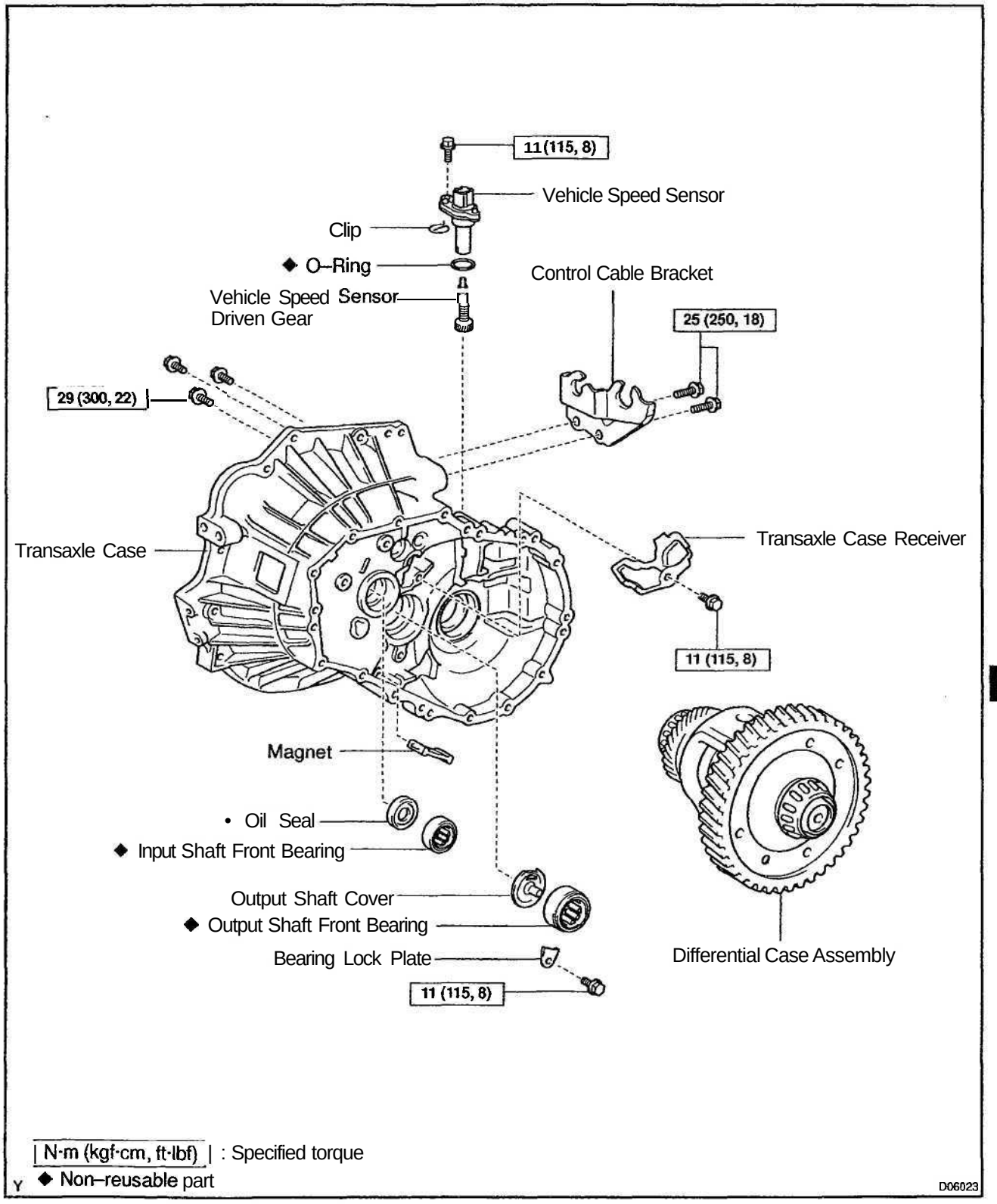

N·m (kgf·cm, ft·lbf) : Specified torque

◆ Non–reusable part

D06023

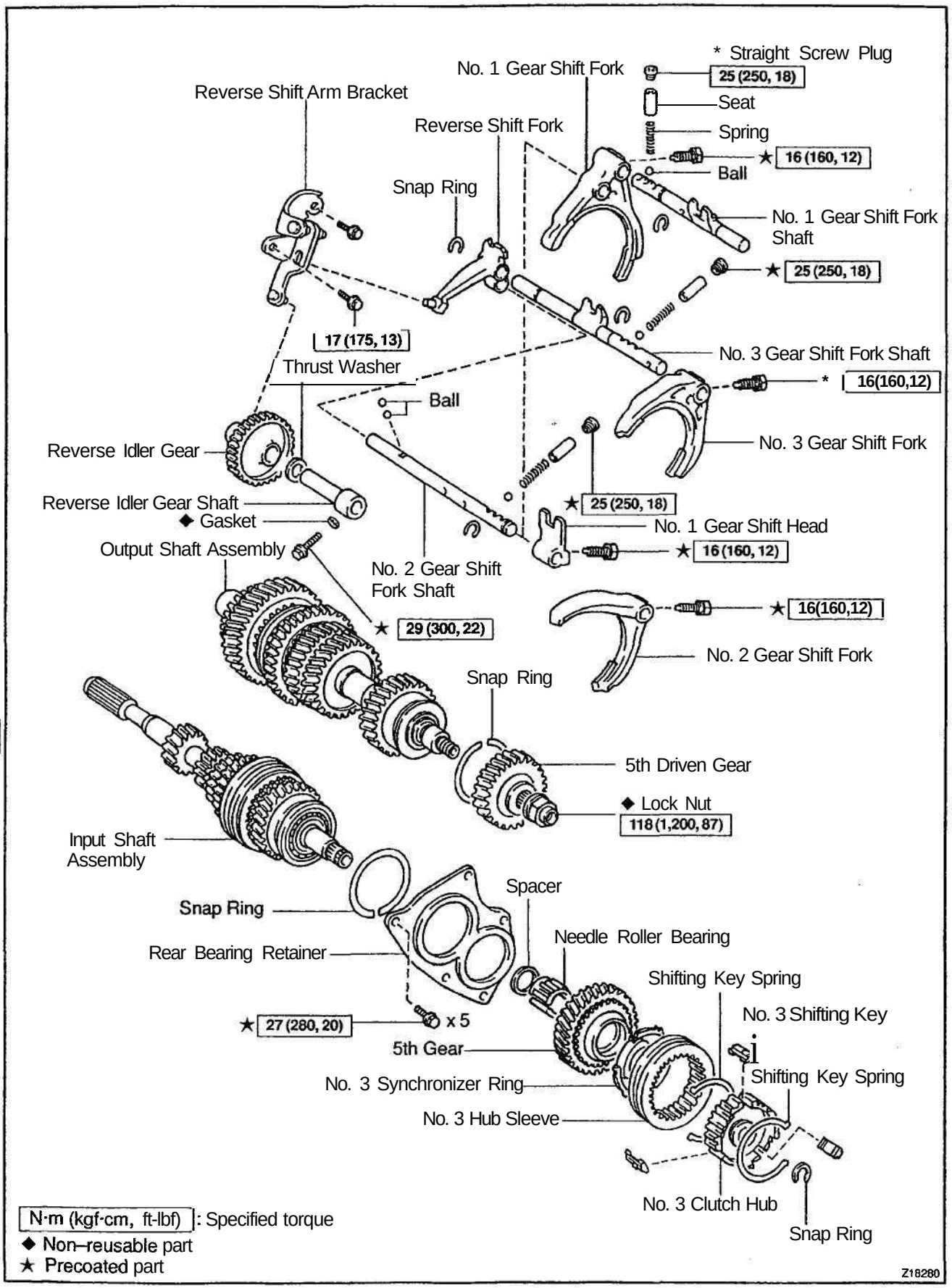
* Straight Screw Plug
25 (250, 18)
No. 1 Gear Shift Fork
Reverse Shift Arm Bracket
Seat
Reverse Shift Fork
Spring
★ 16 (160, 12)
Ball
Snap Ring
No. 1 Gear Shift Fork Shaft
★ 25 (250, 18)
17 (175, 13)
No. 3 Gear Shift Fork Shaft
Thrust Washer
* 16(160,12)
Ball
Reverse Idler Gear
No. 3 Gear Shift Fork
★ 25 (250, 18)
Reverse Idler Gear Shaft
◆ Gasket
No. 1 Gear Shift Head
★ 16 (160, 12)
Output Shaft Assembly
No. 2 Gear Shift Fork Shaft
★ 16(160,12)
★ 29 (300, 22)
No. 2 Gear Shift Fork
Snap Ring
5th Driven Gear
◆ Lock Nut
118 (1,200, 87)
Input Shaft Assembly
Spacer
Snap Ring
Needle Roller Bearing
Rear Bearing Retainer
Shifting Key Spring
No. 3 Shifting Key
★ 27 (280, 20) x 5
5th Gear
Shifting Key Spring
No. 3 Synchronizer Ring
No. 3 Hub Sleeve
No. 3 Clutch Hub
Snap Ring
N·m (kgf·cm, ft-lbf): Specified torque
◆ Non–reusable part
★ Precoated part
Z18280

MX

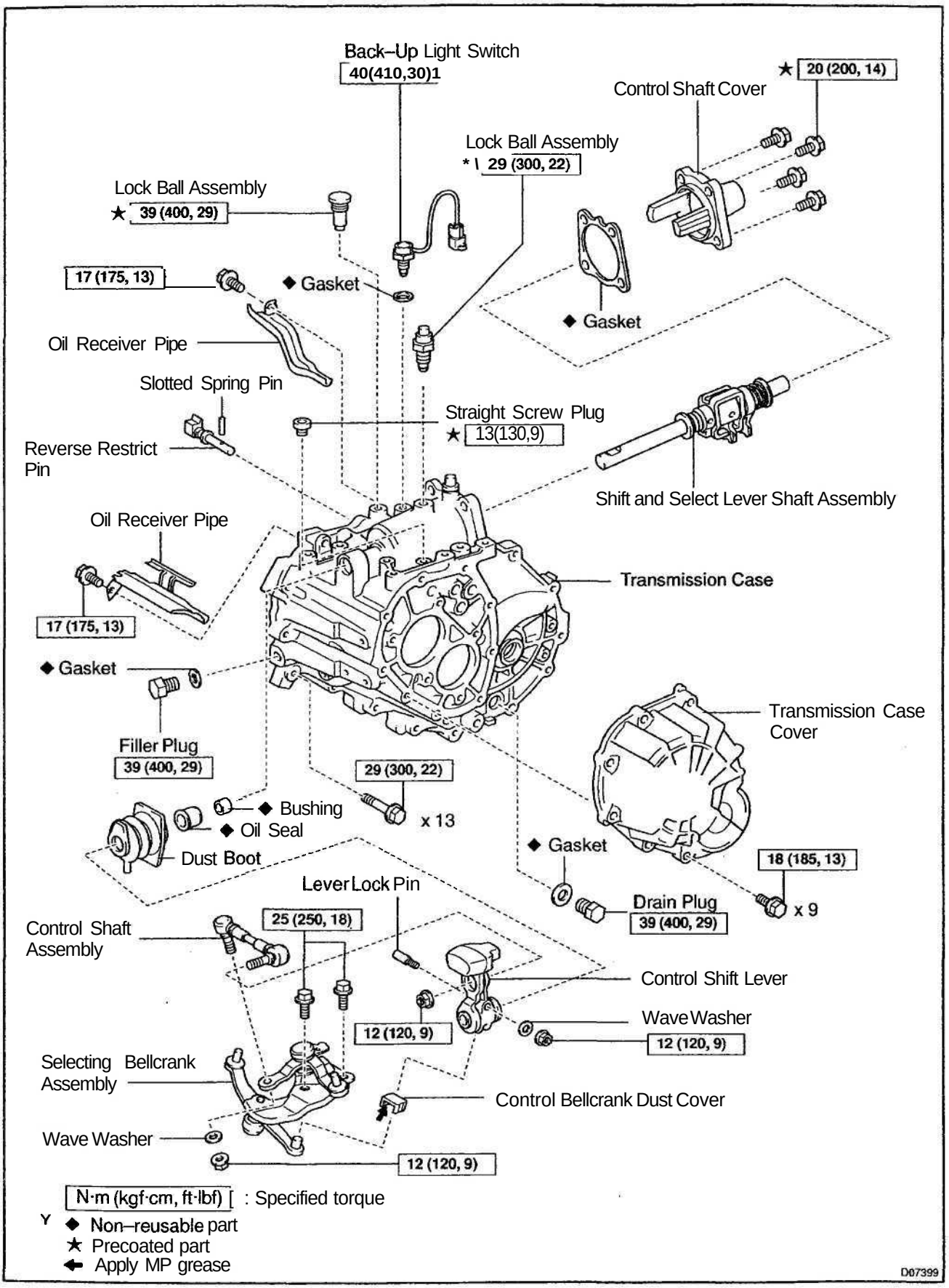
Back–Up Light Switch
40(410,30)1
★ 20 (200, 14)
Control Shaft Cover
Lock Ball Assembly
* \ 29 (300, 22)
Lock Ball Assembly
★ 39 (400, 29)
17 (175, 13)
◆ Gasket
◆ Gasket
Oil Receiver Pipe
Slotted Spring Pin
Straight Screw Plug
★ 13(130,9)
Reverse Restrict Pin
Shift and Select Lever Shaft Assembly
Oil Receiver Pipe
Transmission Case
17 (175, 13)
◆ Gasket
Transmission Case Cover
Filler Plug
39 (400, 29)
29 (300, 22)
x 13
◆ Bushing
◆ Oil Seal
Dust Boot
◆ Gasket
18 (185, 13)
x 9
Drain Plug
39 (400, 29)
Lever Lock Pin
25 (250, 18)
Control Shaft Assembly
Control Shift Lever
Wave Washer
12 (120, 9)
12 (120, 9)
Selecting Bellcrank Assembly
Control Bellcrank Dust Cover
Wave Washer
12 (120, 9)
N·m (kgf·cm, ft·lbf) [: Specified torque
◆ Non–reusable part
★ Precoated part
Apply MP grease
D07399

MX091-01

DISASSEMBLY

1. REMOVE FILLER PLUG AND DRAIN PLUG WITH 2 GASKETS

Torque: 39 N·m (400 kgf·cm, 29 ft·lbf)

2. REMOVE VEHICLE SPEED SENSOR

(a) Remove the bolt and vehicle speed sensor.

Torque: 11 N·m (115 kgf·cm, 8 ft·lbf)

(b) Using a small screwdriver, remove the clip from the vehicle speed sensor.

(c) Remove the vehicle speed sensor driven gear from the speed sensor.

(d) Using a small screwdriver, remove the O–ring from the vehicle speed sensor.

3. REMOVE BACK–UP LIGHT SWITCH WITH GASKET

Torque: 40 N·m (410 kgf·cm, 30 ft·lbf)

4. REMOVE CONTROL CABLE BRACKET

Remove the 2 bolts and control cable bracket.

Torque: 25 N·m (250 kgf·cm, 18 ft·lbf)

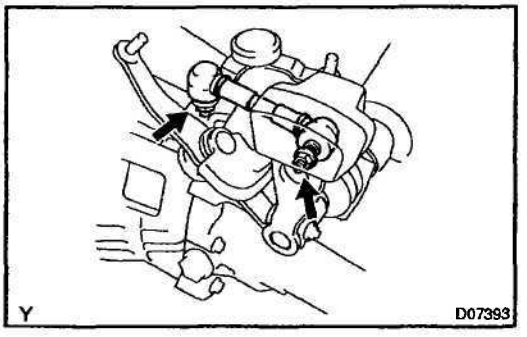

5. REMOVE CONTROL SHAFT ASSEMBLY

Remove the 2 nuts, wave washer and control shaft assembly.

Torque: 12 N·m (120 kgf·cm, 9 ft·lbf)

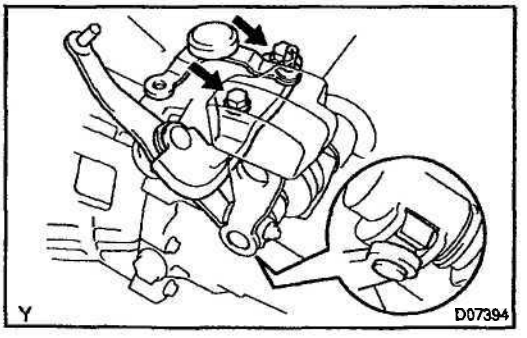

6. REMOVE SELECTING BELLCRANK ASSEMBLY

(a) Remove the 2 bolts and selecting bellcrank assembly.

Torque: 25 N·m (250 kgf·cm, 18 ft·lbf)

NOTICE:

At the time of reassembly, please refer to the following item.

Fit the selecting bellcrank assembly pin part with the dust cover into a groove in the control shift lever.

(b) Remove the control bellcrank dust cover from the selecting bellcrank assembly.

NOTICE:

At the time of reassembly, please refer to the following item.

Apply MP grease to the inside circumferential surface of the control bellcrank dust cover.

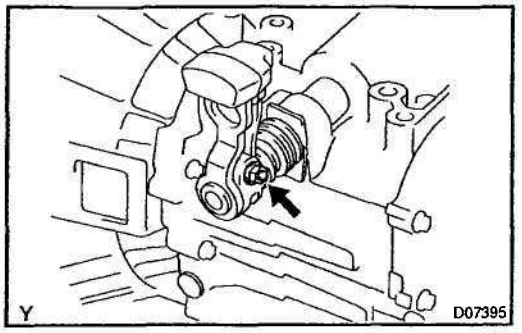

7. REMOVE CONTROL SHIFT LEVER AND DUST BOOT

(a) Remove the nut and wave washer.

Torque: 12 N·m (120 kgf·cm, 9 ft·lbf)

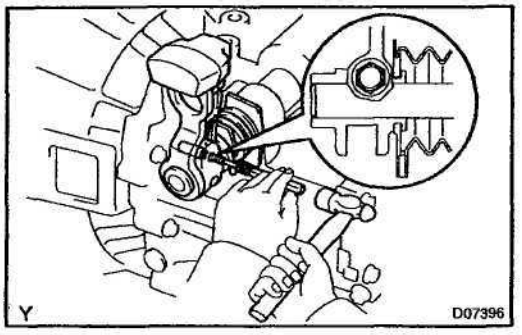

(b) Using a pin punch and hammer, drive out the lever lock pin.

NOTICE:

At the time of reassembly, please refer to the following item.

When fixing the lever lock pin, properly position the shaft groove.

(c) Remove the control shift lever and dust boot.

NOTICE:

At the time of reassembly, please refer to the following items.

- **Install the dust boot into a groove in the control shift lever.**
- **Be sure to install the dust boot in the correct direction, as shown in the illustration.**

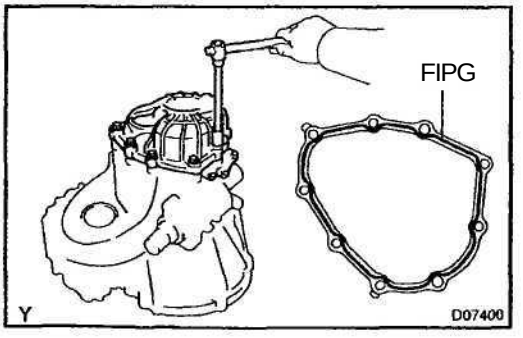

8. REMOVE TRANSMISSION CASE COVER

(a) Remove the 9 bolts.

Torque: 18 N·m (185 kgf·cm, 13 ft·lbf)

(b) Using a brass bar and hammer, carefully tap the projection of the transmission case cover to remove the transmission case cover from the transmission case.

HINT:

At the time of reassembly, please refer to the following item.

Apply FIPG to the transmission case cover, as shown in the illustration.

FIPG:

Part No. 08826–00090, THREE BOND 1281 or equivalent

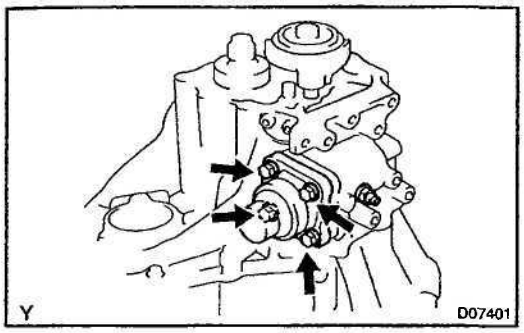

9. REMOVE LOCK BALL ASSEMBLY AND CONTROL SHAFT COVER

(a) Remove the lock ball assembly.
Sealant:
Part No. 08833–00080, THREE BOND 1344, LOCTITE 242 or equivalent
Torque: 29 N·m (300 kgf-cm, 22 ft·lbf)

(b) Remove the 4 bolts and control shaft cover with the gasket.
Sealant:
Part No. 08833–00080, THREE BOND 1344, LOCTITE 242 or equivalent
Torque: 20 N·m (200 kgf·cm, 14 ft·lbf)

10. REMOVE SHIFT AND SELECT LEVER SHAFT ASSEMBLY

NOTICE:
At the time of reassembly, please refer to the following item.
Set the claws of the shift interlock plate into the shift head part of the gear shift fork shaft securely.

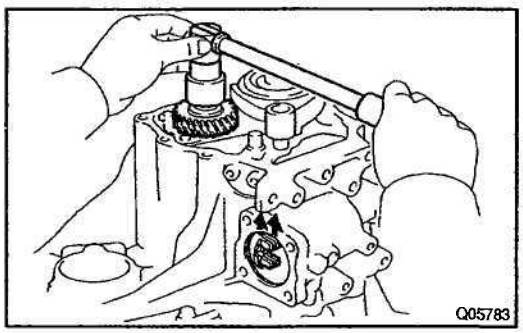

11. REMOVE LOCK NUT

(a) Engage the gear double meshing.
(b) Using a chisel and hammer, loosen the staked part of the nut.
(c) Remove the lock nut.
Torque: 118 N m (1,200 kgf·cm, 87 ft·lbf)
(d) Disengage the gear double meshing.

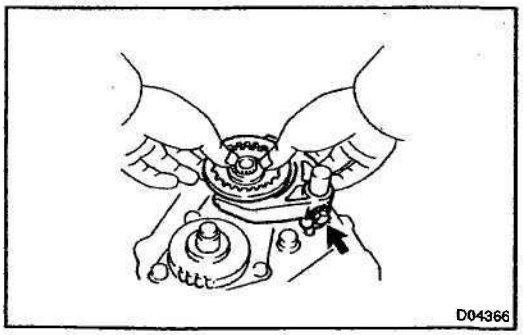

12. REMOVE NO. 3 HUB SLEEVE AND NO. 3 GEAR SHIFT FORK

(a) Remove the bolt from the No. 3 gear shift fork.
Torque: 16 N·m (160 kgf·cm, 12 ft·lbf)
Sealant:
Part No. 08833–00080, THREE BOND 1344, LOCTITE 242 or equivalent

(b) Remove the No. 3 hub sleeve with the No. 3 gear shift fork.

HINT:
At the time of reassembly, please refer to the following items.
- Install the No. 3 clutch hub assembly to the No. 3 hub sleeve.

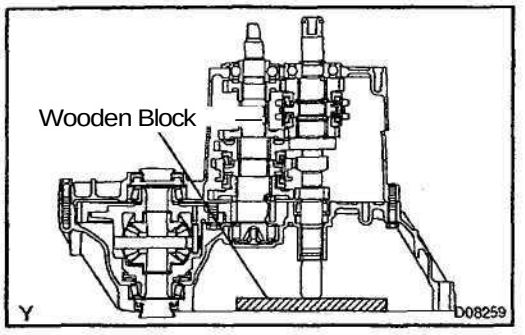

- Before driving in the No. 3 clutch hub assembly, place the suitable sized wooden block on the rear side of the input shaft, as shown in the illustration. When driving it in, fix the input shaft firmly so that it is not pushed downward. Otherwise the input shaft rear radial ball bearing is overloaded, it might be damaged.

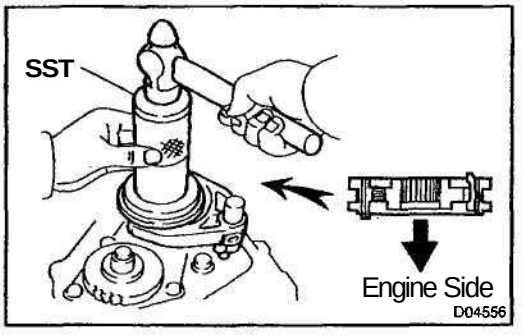

- Using SST and a hammer, drive in the No. 3 hub sleeve assembly with the No. 3 gear shift fork.
  SST 09636–20010

NOTICE:

- **Be sure to install the No. 3 hub sleeve assembly in the correct direction, as shown in the illustration.**
- **Align the No. 3 synchronizer ring slots with the No. 3 shifting keys.**

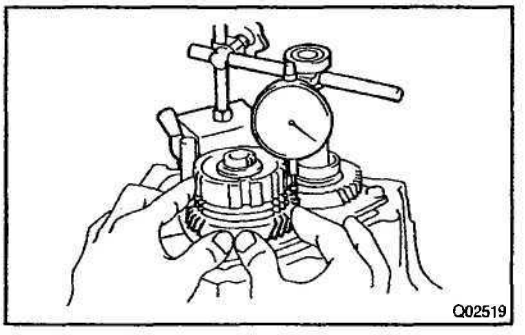

13. INSPECT 5TH GEAR THRUST CLEARANCE

Using a dial indicator, measure the thrust clearance.

Standard clearance:
0.10 - 0.57 mm (0.0039 - 0.0224 in.)
Maximum clearance:
0.57 mm (0.0224 in.)

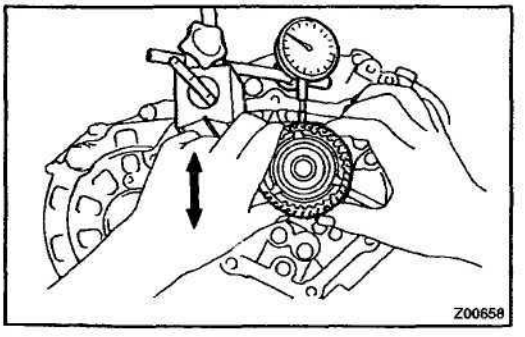

14. INSPECT 5TH GEAR RADIAL CLEARANCE

Using a dial indicator, measure the radial clearance.

Standard clearance:
KOYO made:
0.015 - 0.058 mm (0.0006 - 0.0023 in.)
NSK made:
0.015 - 0.056 mm (0.0006 - 0.0022 in.)
Maximum clearance:
KOYO made: 0.058 mm (0.0023 in.)
NSK made: 0.056mm (0.0022 in.)

If the clearance exceeds the maximum, replace the gear, needle roller bearing or shaft.

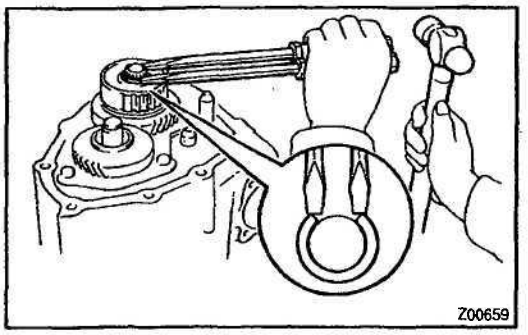

15. REMOVE NO. 3 CLUTCH HUB AND 5TH GEAR

(a) Using 2 screwdrivers and a hammer, tap out the snap ring.

HINT:

At the time of reassembly, please refer to the following item.

Select a snap ring from the table below that will make the thrust clearance of the No. 3 clutch hub less than 0.1 mm (0.0039 in.).

Mark	Thickness mm (in.)	Mark	Thickness mm (in.)
A	2.25 (0.0886)	E	2.49 (0.0980)
B	2.31 (0.0909)	F	2.55 (0.1004)
C	2.37 (0.0933)	G	2.61 (0.1028)
D	2.43 (0.0957)	–	–

(b) Using a screwdriver, remove the shifting key spring from the No. 3 clutch hub.

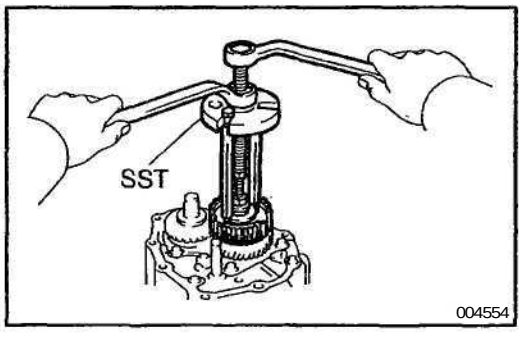

(c) Install a bolt and washer to the tip of the input shaft and using SST, remove the No. 3 clutch hub.

SST 09950–30011

HINT:

Select a bolt whose outer diameter is smaller than the screw hole of the input shaft so that it can be turned easily.

(d) Remove the No. 3 synchronizer ring, 5th gear, needle roller bearing and spacer.

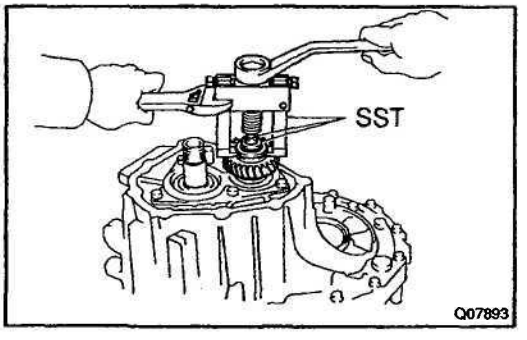

16. REMOVE 5TH DRIVEN GEAR

Using SST, remove the 5th driven gear.

SST 09628–62011, 09950–40011 (09957–04010), 09950–60010 (09951–00230)

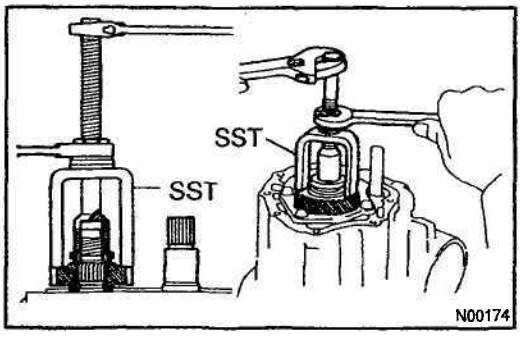

HINT:

At the time of reassembly, please refer to the following item.

Using SST, install the 5th driven gear.

SST 09309–12020

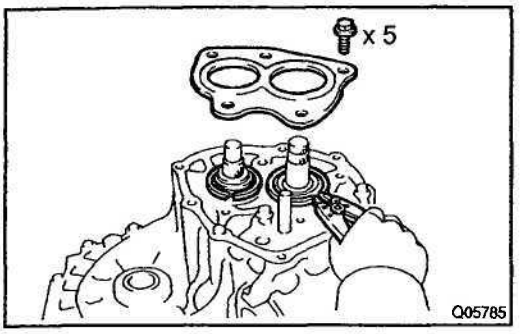

17. REMOVE REAR BEARING RETAINER

Remove the 5 bolts and rear bearing retainer.

Sealant:
Part No. 08833–00080, THREE BOND 1344, LOCTITE 242 or equivalent
Torque: 27 N·m (280 kgf·cm, 20 ft·lbf)

18. REMOVE BEARING SNAP RING

Using a snap ring expander, remove the 2 snap rings.

HINT:

If it is difficult to remove and install the snap rings, pull up the shafts.

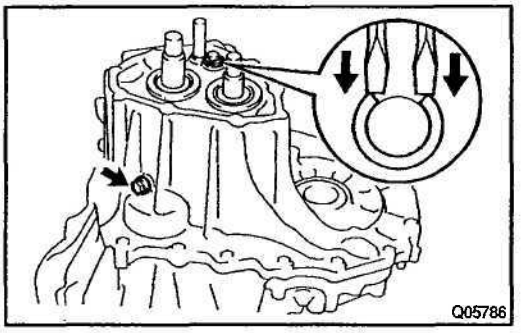

19. REMOVE REVERSE IDLER GEAR SHAFT LOCK BOLT AND GASKET

Sealant:
Part No. 08833–00080, THREE BOND 1344, LOCTITE 242 or equivalent
Torque: 29 N·m (300 kgf·cm, 22 ft·lbf)

20. REMOVE SNAP RING FROM NO. 2 SHIFT FORK SHAFT

Using 2 screwdrivers and a hammer, tap out the snap ring.

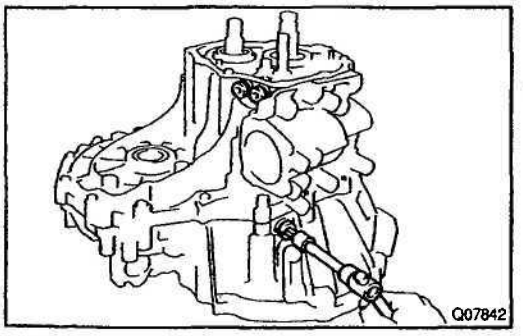

21. REMOVE STRAIGHT SCREW PLUG, SEAT, SPRING AND BALL

(a) Using a hexagon wrench, remove the 3 straight screw plugs.

Sealant:
Part No. 08833–00080, THREE BOND 1344, LOCTITE 242 or equivalent
Torque: 25 N·m (250 kgf·cm, 18 ft·lbf)

(b) Using a magnetic finger, remove the 3 seats, springs and balls.

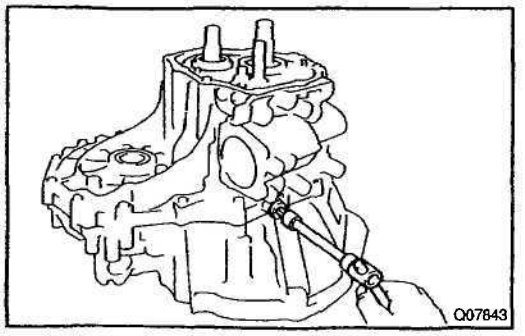

22. REMOVE LOCK BALL ASSEMBLY

Using a hexagon wrench, remove the lock ball assembly.

Sealant:
Part No. 08833–00080, THREE BOND 1344, LOCTITE 242 or equivalent
Torque: 39 N·m (400 kgf·cm, 29 ft·lbf)

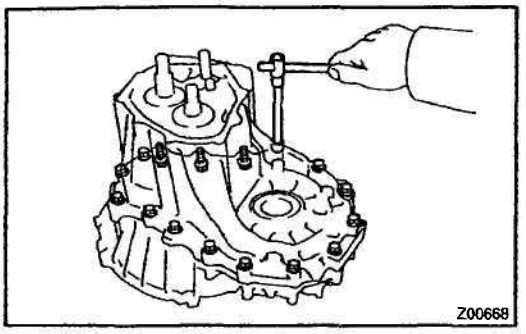

23. REMOVE TRANSMISSION CASE

(a) Remove the 16 bolts.
Torque: 29 N-m (300 kgf-cm, 22 ft-lbf)

(b) Using a plastic hammer, carefully tap the projection of the transmission case to remove the transmission case from the transaxle case.

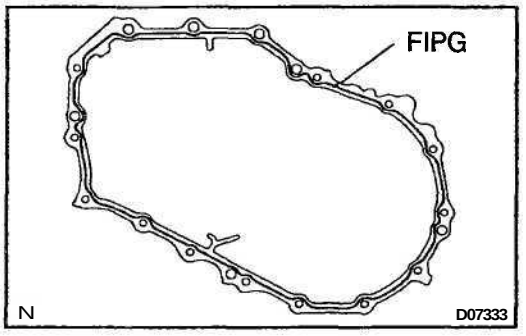

HINT:
At the time of reassembly, please refer to the following item.
Apply FiPG to the transaxle case, as shown in the illustration.

FIPG:
Part No. 08826–00090, THREE BOND 1281 or equivalent

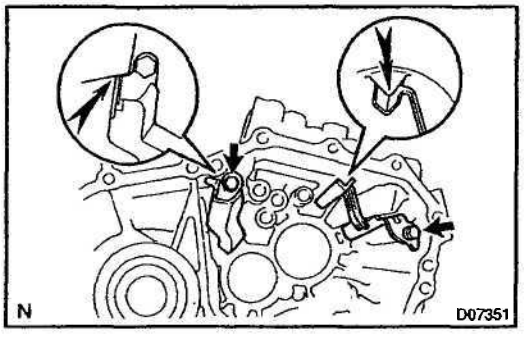

24. REMOVE OIL RECEIVER PIPE

Remove the 2 bolts and oil receiver pipes from the transmission case.

Torque: 17 N-m (175 kgf-cm, 13 ft-lbf)

NOTICE:
At the time of reassembly, please refer to the following items.

- **Prevent the oil receiver pipes from being deformed.**
- **Install the oil receiver pipes while placing it against the transmission case, as shown in the illustration.**

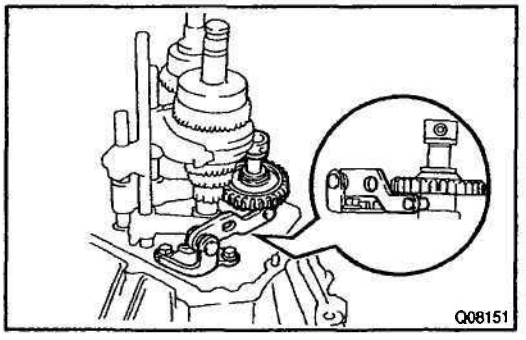

25. REMOVE REVERSE IDLER GEAR, THRUST WASHER AND SHAFT

26. REMOVE REVERSE SHIFT ARM BRACKET

Remove the 2 bolts and reverse shift arm bracket.

Torque: 17 N-m (175 kgf-cm, 13 ft-lbf)

NOTICE:
At the time of reassembly, please refer to the following items.

- *** Set the pin on the top of the reverse shift arm into a groove on the reverse idler gear.**
- **Fit the claw of the reverse shift arm bracket with the notch of the input shaft front bearing.**

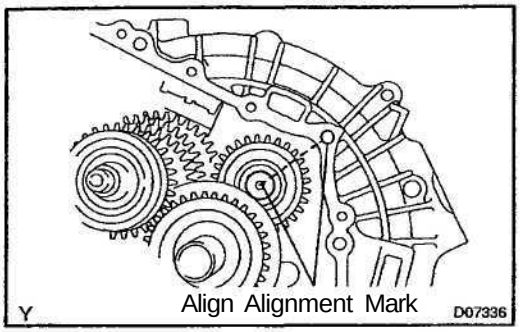

- **Install the reverse idler gear, thrust washer and shaft, as shown in the illustration.**

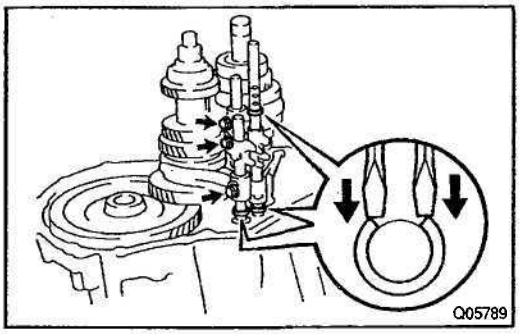

27. REMOVE GEAR SHIFT FORK AND GEAR SHIFT FORK SHAFT

(a) Using 2 screwdrivers and a hammer, tap out the 3 snap rings from each gear shift fork shaft.

(b) Remove the 3 bolts from the No. 1 gear shift head, No. 1 and No. 2 gear shift forks.

Sealant:
Part No. 08833–00080, THREE BOND 1344, LOCTITE 242 or equivalent
Torque: 16 N·m (160 kgf·cm, 12 ft·lbf)

(c) Pull up the No. 3 gear shift fork shaft, remove the No. 2 gear shift fork shaft.

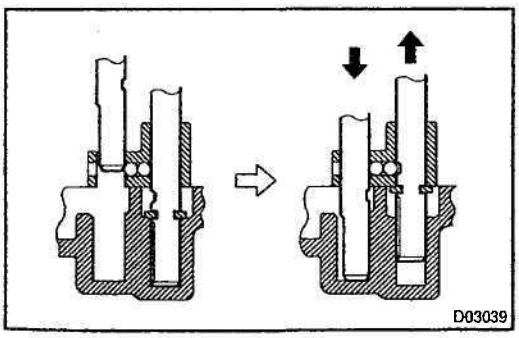

NOTICE:
At the time of reassembly, please refer to the following item.
To avoid the interference of the 2 balls, lift up the No. 3 gear shift fork shaft at the position shown in the illustration.

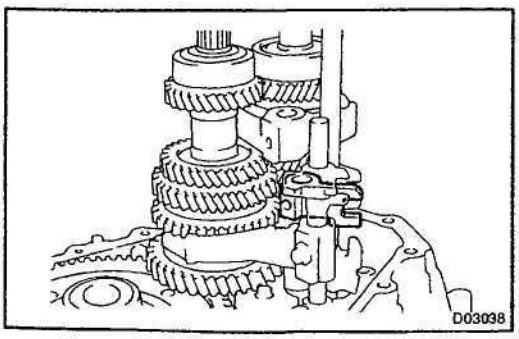

(d) Remove the No. 1 gear shift head.

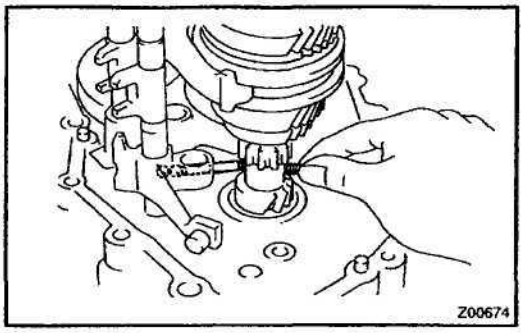

(e) Using a magnetic finger, remove the 2 balls from the reverse shift fork.
(f) Remove the No. 3 gear shift fork shaft and reverse shift fork.
(g) Pull out the No. 1 gear shift fork shaft.
(h) Remove the No. 1 and No. 2 gear shift forks.

28. REMOVE INPUT AND OUTPUT SHAFTS TOGETHER FROM TRANSAXLE CASE

29. REMOVE DIFFERENTIAL CASE ASSEMBLY

NOTICE:

At the time of reassembly, please refer to the following item.

Before reassembly, inspect the differential tapered roller bearing preload. (See page MX–49)

30. REMOVE MAGNET FROM TRANSAXLE CASE

31. DISASSEMBLE NO. 3 CLUTCH HUB ASSEMBLY

(a) Using a screwdriver, remove the shifting key spring.

NOTICE:

At the time of reassembly, please refer to the following item.

Position the shifting key springs so that their end gaps are not aligned.

(b) Remove the 3 No. 3 shifting keys from the No. 3 clutch hub.

MX03U-01

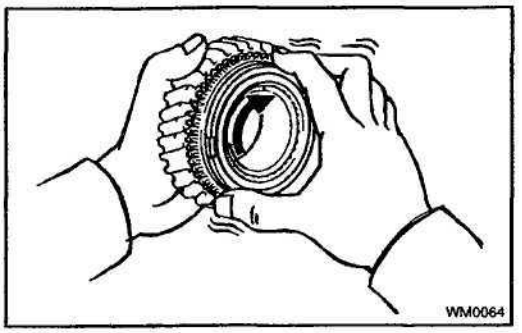

INSPECTION

1. INSPECT 5TH GEAR SYNCHRONIZER RING

(a) Check for wear or damage.

(b) Check the braking effect of the synchronizer ring. Turn the synchronizer ring in one direction while pushing it to the gear cone. Check that the ring locks.

If the braking effect is insufficient, apply a small amount of the fine lapping compound between the synchronizer ring and gear cone. Lightly rub the synchronizer ring and gear cone together.

NOTICE:

Ensure the fine lapping compound is completely washed off after rubbing.

(c) Check again the braking effect of the synchronizer ring.

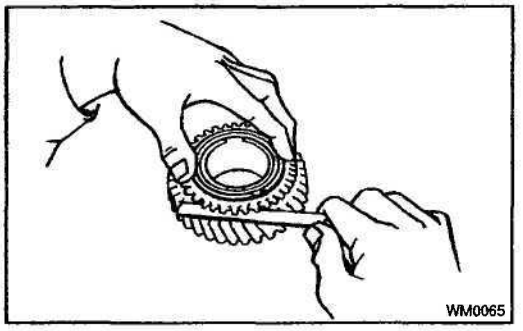

(d) Using a feeler gauge, measure the clearance between the synchronizer ring back and gear spline end.

Minimum clearance: 0.5 mm (0.020 in.)

If the clearance is less than the minimum, replace the synchronizer ring, and apply a small amount of the fine lapping compound on gear cone.

NOTICE:

Ensure the fine lapping compound is completely washed off after rubbing.

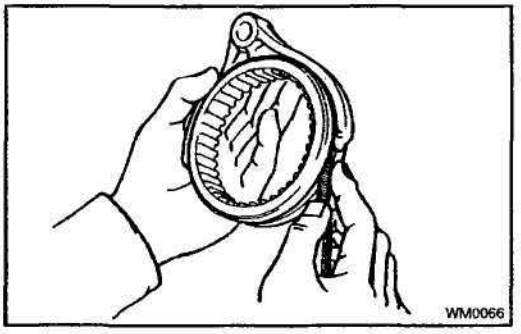

2. INSPECT GEAR SHIFT FORK AND HUB SLEEVE CLEARANCE

Using a feeler gauge, measure the clearance between the hub sleeve and gear shift fork.

Maximum clearance: 0.5 mm (0.020 in.)

If the clearance exceeds the maximum, replace the gear shift fork or hub sleeve.

3. REMOVE TRANSAXLE CASE RECEIVER

Remove the bolt and transaxle case receiver from the transaxle case.

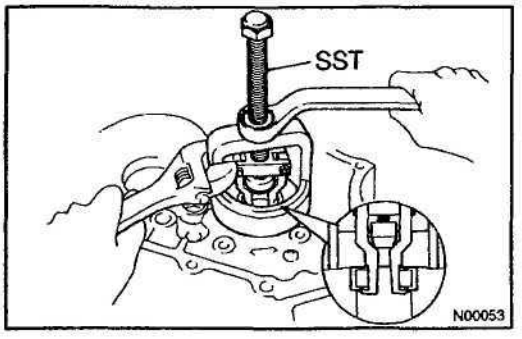

4. IF NECESSARY, REPLACE INPUT SHAFT FRONT BEARING AND OIL SEAL

(a) Using SST, remove the input shaft front bearing.

SST 09612–65014

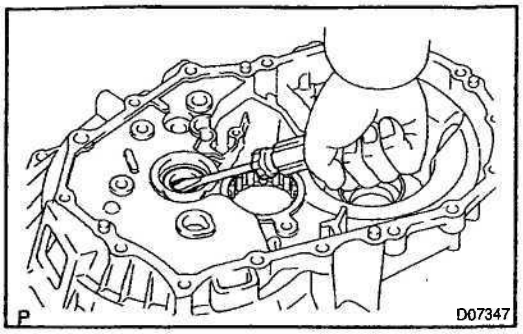

(b) Using a screwdriver, remove the oil seal.

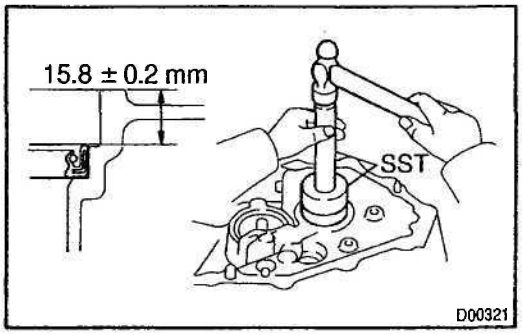

(c) Using SST and a hammer, drive in a new oil seal.
SST 09950-60010 (09951–00360), 09950-70010 (09951–07150)
Drive in depth: 15.8 ± 0.2 mm (0.622 ± 0.008 in.)

(d) Coat the lip of the oil seal with MP grease.

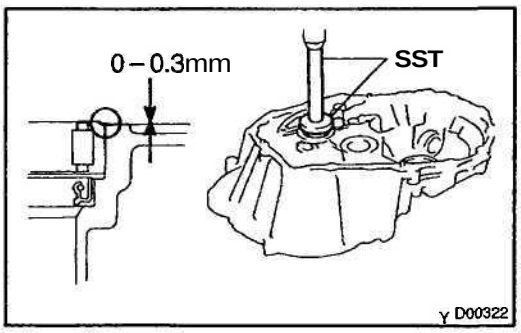

(e) Using SST and a press, install a new input shaft front bearing.
SST 09950–60010 (09951–00400), 09950-70010 (09951–07150)
Drive in depth: 0 - 0.3 mm (0 - 0.012 in.)

NOTICE:
Be sure to install a new bearing in the correct direction, as shown in the illustration.

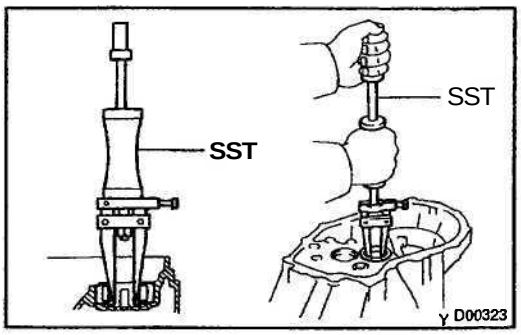

5. IF NECESSARY, REPLACE OUTPUT SHAFT FRONT BEARING AND OUTPUT SHAFT COVER

(a) Remove the bolt and bearing lock plate.

(b) Using SST, pull out the output shaft front bearing.
SST 09308–00010

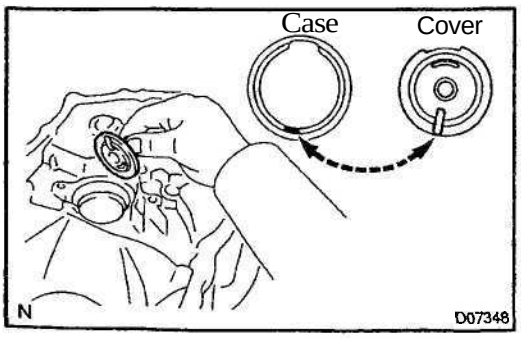

(c) Remove the output shaft cover.

(d) Install the output shaft cover.

NOTICE:
Install the output shaft cover projection into the case side hollow.

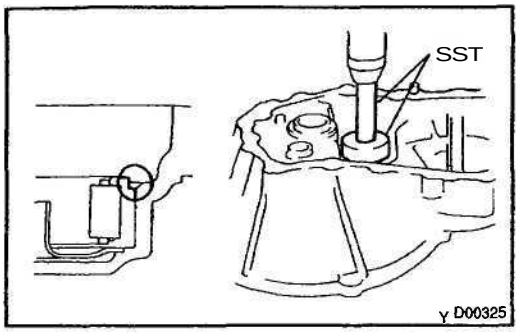

(e) Using SST and a press, install a new output shaft front bearing.
SST 09950-60010 (09951–00560), 09950–70010 (09951–07150)

NOTICE:
- **Be sure to install a new bearing in the correct direction, as shown in the illustration.**
- **When replacing the output shaft front bearing, replace the output shaft front bearing inner race along with it.**

(f) Install the bearing lock plate with the bolt.
Torque: 11 N·m (115 kgf·cm, 8 tt-lbf)

6. INSTALL TRANSAXLE CASE RECEIVER

Install the transaxle case receiver to the transaxle case with the bolt.
Torque: 11 N·m (115 kgf·cm, 8 ft-lbf)

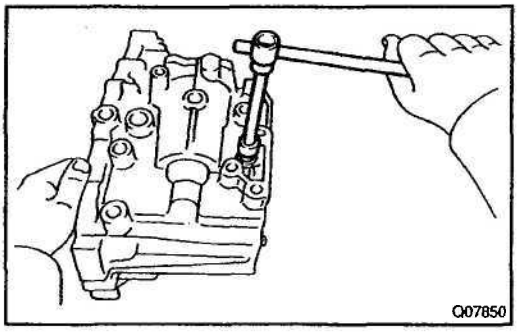

7. IF NECESSARY, REPLACE REVERSE RESTRICT PIN

(a) Using a hexagon wrench, remove the straight screw plug.
(b) Using a pin punch and hammer, drive out the slotted spring pin.

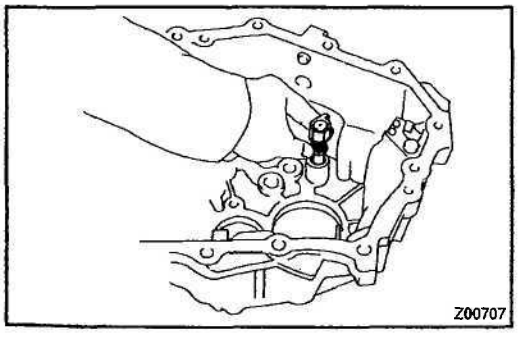

(c) Replace the reverse restrict pin.
(d) Using a pin punch and hammer, drive in the slotted spring pin.
(e) Apply sealant to the screw plug threads.
Sealant:
Part No. 08833–00080, THREE BOND 1344, LOCTITE 242 or equivalent
(f) Using a hexagon wrench, install the straight screw plug.
Torque: 13 N·m (130 kgf·cm, 9 ft·lbf)

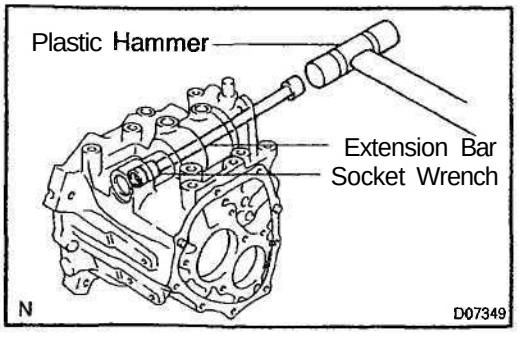

8. IF NECESSARY, REPLACE TRANSMISSION CASE BUSHING

(a) Using a socket wrench (12 mm), extension bar and plastic hammer, drive out the bushing.

NOTICE:
When driving out the bushing, be careful not to damage the transmission case by the socket wrench.

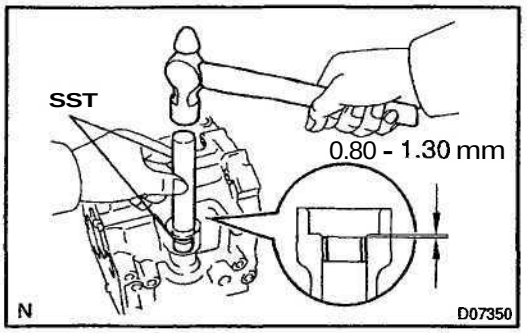

(b) Using SST and a hammer, drive in a new bushing.
SST 09950-60010 (09951–00180), 09950-70010 (09951–07100)
Drive in depth: 0.80 – 1.30 mm (0.0315 - 0.0512 in.)

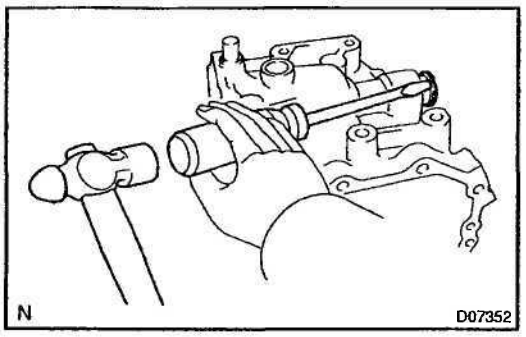

9. IF NECESSARY, REPLACE TRANSMISSION CASE OIL SEAL

(a) Using a screwdriver and hammer, drive out the oil seal.

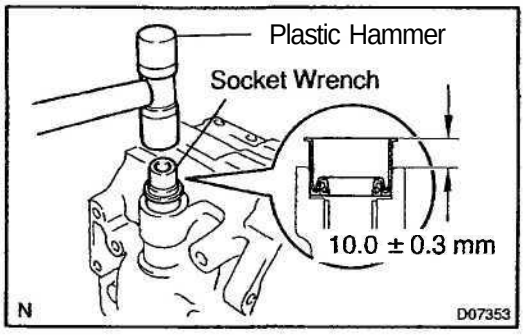

(b) Using a socket wrench (17 mm) and plastic hammer, drive in a new oil seal.
Drive in depth: 10.0 ± 0.3 mm (0.394 ± 0.012 in.)

(c) Coat the lip of the oil seal with MP grease.

REASSEMBLY

Reassembly is in the reverse order of disassembly. (See page MX–12)

NOTICE:

When working with FIPG material, you must observe the followings.

- **Using a razor blade and gasket scraper, remove all old FIPG material from the gasket surfaces.**
- **Thoroughly clean all components to remove all loose material.**
- **Clean both sealing surfaces with a non–residue solvent.**
- **Apply FIPG in an approx. 1 mm (0.04 in.) wide bead along the sealing surface.**
- **Parts must be assembled within 10 minutes of application. Otherwise, the FIPG material must** be removed and reapplied.

HINT:

Coat all of the sliding and rotating surfaces with gear oil before reassembly.

INPUT SHAFT

COMPONENTS

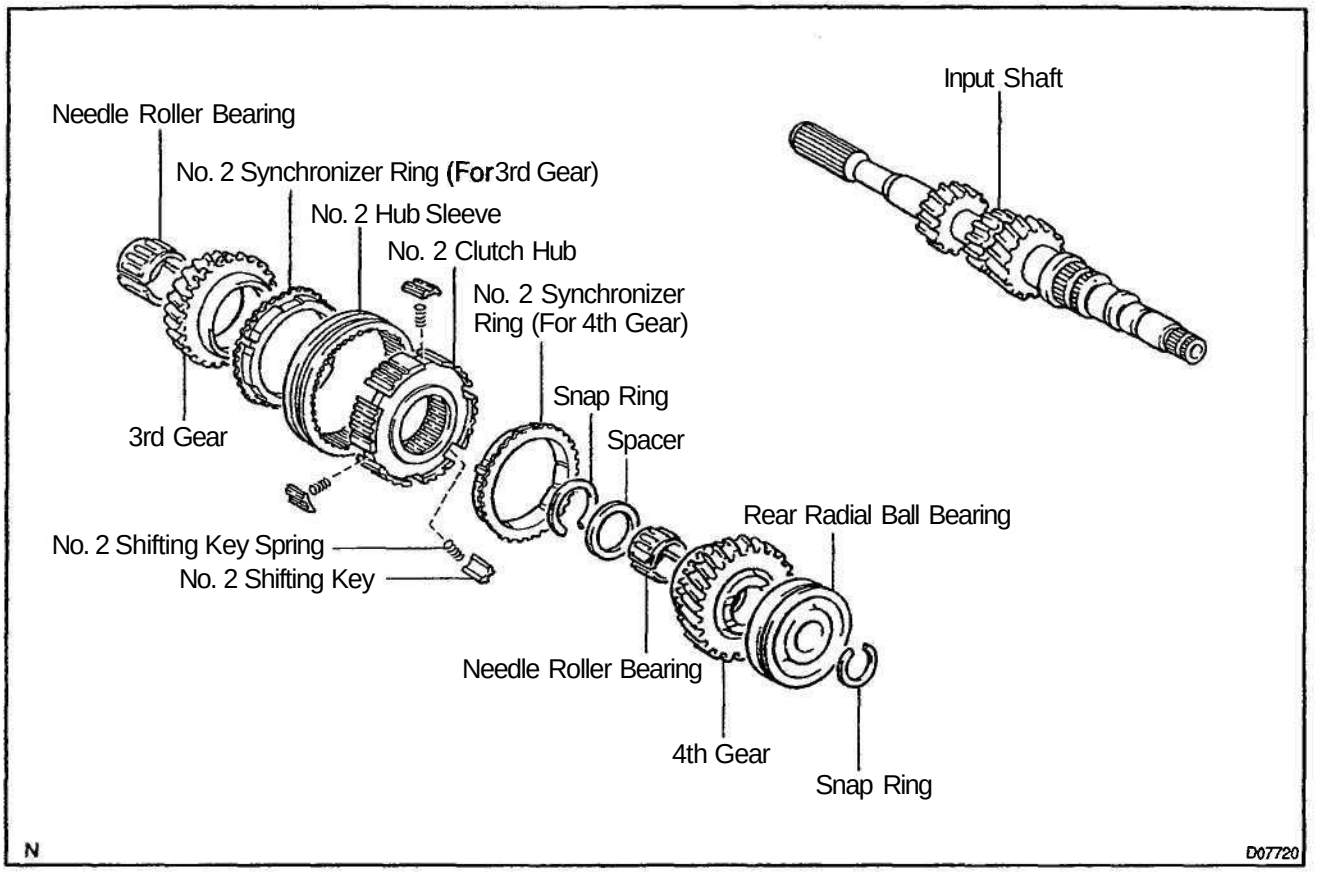

MX09L-01

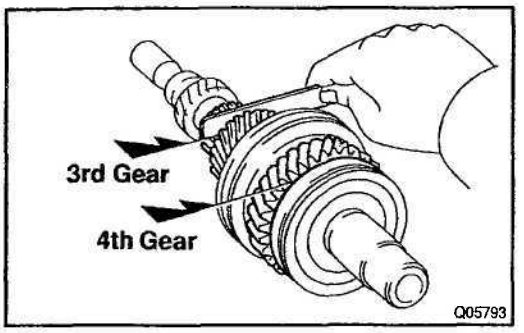

DISASSEMBLY

1. INSPECT 3RD AND 4TH GEARS THRUST CLEARANCE

Using a feeler gauge, measure the thrust clearance.

Standard clearance:
3rd gear: 0.10 - 0.35 mm (0.0039 - 0.0138 in.)
4th gear: 0.10 - 0.55 mm (0.0039 - 0.0217 in.)
Maximum clearance:
3rd gear: 0.35 mm (0.0138 in.)
4th gear: 0.55 mm (0.0217 in.)

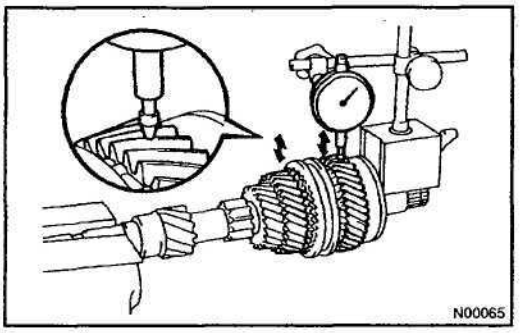

2. INSPECT 3RD AND 4TH GEARS RADIAL CLEARANCE

Using a dial indicator, measure the radial clearance between the gear and shaft.

Standard clearance:
KOYO made:
0.015 - 0.058 mm (0.0006 - 0.0023 in.)
NSK made:
0.015 - 0.056 mm (0.0006 - 0.0022 in.)
Maximum clearance:
KOYO made: 0.058 mm (0.0023 in.)
NSK made: 0.056 mm (0.0022 in.)

If the clearance exceeds the maximum, replace the gear, needle roller bearing or shaft.

3. REMOVE SNAP RING

Using 2 screwdrivers and a hammer, tap out the snap ring.

HINT:

Take care not to damage the journal surface of the input shaft.

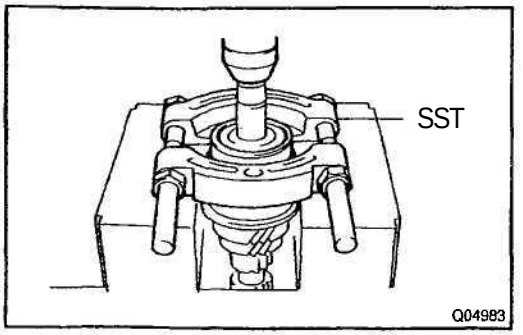

4. REMOVE REAR RADIAL BALL BEARING, 4TH GEAR, NEEDLE ROLLER BEARING, SPACER AND NO. 2 SYNCHRONIZER RING (FOR 4TH GEAR) FROM INPUT SHAFT

(a) Using SST and a press, remove the rear radial ball bearing and 4th gear.

SST 09950–00020

HINT:

Support the input shaft assembly by hand so that it will not be dropped off.

(b) Remove the needle roller bearings, spacer and No. 2 synchronizer ring (for the 4th gear).

5. REMOVE SNAP RING

Using 2 screwdrivers and a hammer, tap out the snap ring.

HINT:

Take care not to damage the journal surface of the input shaft.

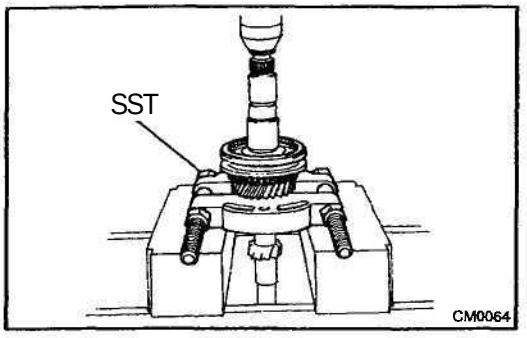

6. REMOVE NO. 2 HUB SLEEVE ASSEMBLY, 3RD GEAR, NO. 2 SYNCHRONIZER RING (FOR 3RD GEAR) AND NEEDLE ROLLER BEARING

(a) Using SST and a press, remove the No. 2 hub sleeve assembly, 3rd gear and No. 2 synchronizer ring (for the 3rd gear).

SST 09950–00020

HINT:

Support the input shaft by hand so that it will not be dropped off.

(b) Remove the needle roller bearings.

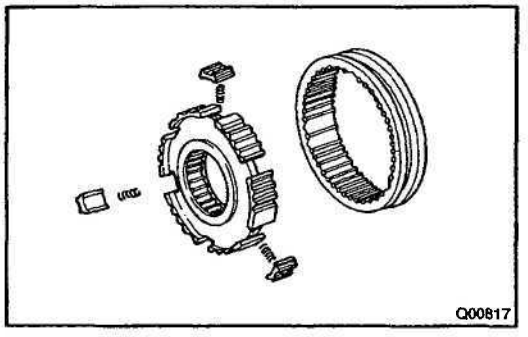

7. DISASSEMBLE NO. 2 HUB SLEEVE ASSEMBLY

(a) Remove the No. 2 hub sleeve from the No. 2 clutch hub.

(b) Remove the 3 No. 2 shifting keys and No. 2 shifting key springs from the No. 2 clutch hub.

MX09M-01

INSPECTION

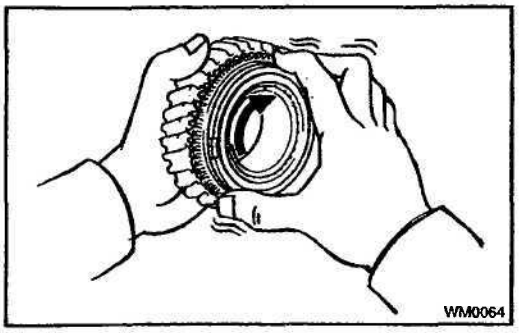

1. INSPECT SYNCHRONIZER RING

(a) Check for wear or damage.

(b) Check the braking effect of the synchronizer ring. Turn the synchronizer ring in one direction while pushing it to the gear cone. Check that the ring locks.

If the braking effect is insufficient, apply a small amount of the fine lapping compound between the synchronizer ring and gear cone. Lightly rub the synchronizer ring and gear cone together.

NOTICE:

Ensure the fine lapping compound is completely washed off after rubbing.

(c) Check again the braking effect of the synchronizer ring.

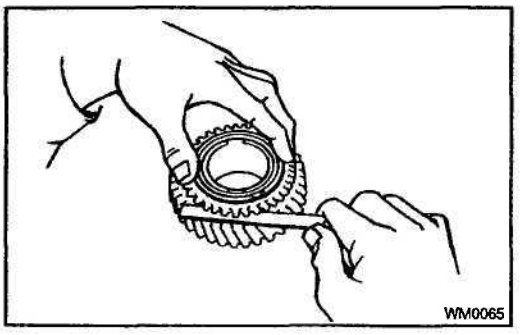

(d) Using a feeler gauge, measure the clearance between the synchronizer ring back and gear spline end.

Minimum clearance:

3rd gear: 0.65 mm (0.0256 in.)

4th gear: 0.75 mm (0.0295 in.)

If the clearance is less than the minimum, replace the synchronizer ring, and apply a small amount of the fine lapping compound on gear cone.

NOTICE:

Ensure the fine lapping compound is completely washed off after rubbing.

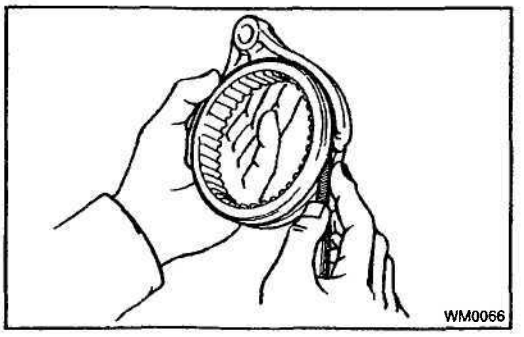

2. INSPECT GEAR SHIFT FORK AND HUB SLEEVE CLEARANCE

Using a feeler gauge, measure the clearance between the hub sleeve and gear shift fork.

Maximum clearance: 0.35 mm (0.014 in.)

If the clearance exceeds the maximum, replace the gear shift fork or hub sleeve.

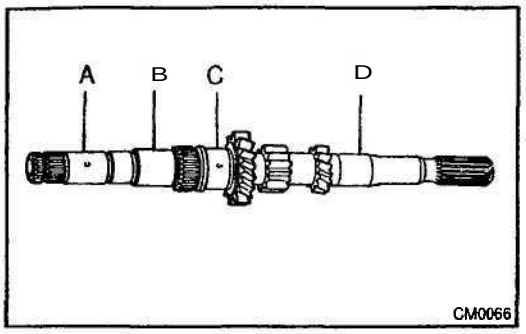

3. INSPECT INPUT SHAFT

(a) Check the input shaft for wear or damage.

(b) Using a micrometer, measure the outer diameter of the input shaft journal surface.

Minimum outer diameter:
Part A: 24.885 mm (0.9797 in.)
Part B: 28.985 mm (1.1411 in.)
Part C: 30.985 mm (1.2199 in.)
Part D: 24.985 mm (0.9837 in.)

If the outer diameter is less than the minimum, replace the input shaft.

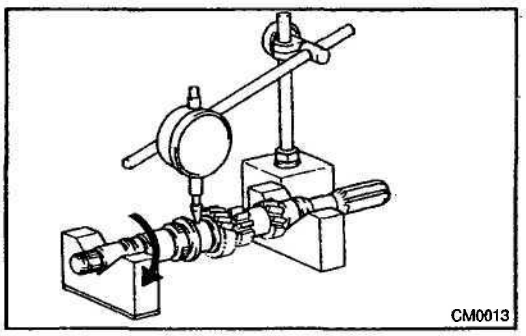

(c) Using a dial indicator, check the shaft runout.

Maximum runout: 0.03 mm (0.0012 in.)

If the runout exceeds the maximum, replace the input shaft.

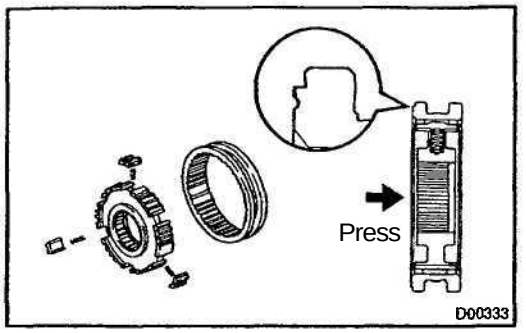

REASSEMBLY

Coat all of the sliding and rotating surfaces with gear oil before reassembly.

1. ASSEMBLE NO. 2 HUB SLEEVE ASSEMBLY

(a) Install the 3 No. 2 shifting key springs and No. 2 shifting keys to the No. 2 clutch hub.

(b) Install the No. 2 hub sleeve to the No. 2 clutch hub.

NOTICE:

Assemble the No. 2 hub sleeve and No. 2 clutch hub in the direction shown in the illustration.

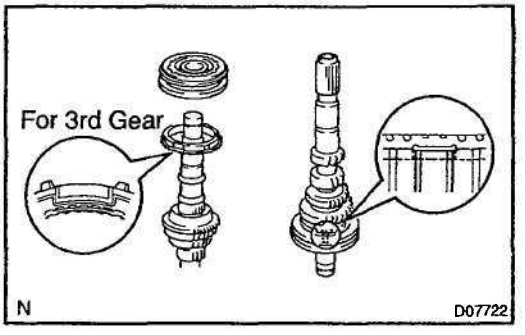

2. INSTALL NEEDLE ROLLER BEARING, 3RD GEAR, NO. 2 SYNCHRONIZER RING (FOR 3RD GEAR) AND NO. 2 HUB SLEEVE ASSEMBLY TO INPUT SHAFT

(a) Apply gear oil to the needle roller bearings and install it.

(b) Install the 3rd gear and No. 2 synchronizer ring (for the 3rd gear).

NOTICE:

Distinguish the No. 2 synchronizer ring (for the 3rd gear) by the teeth on the synchronizer ring.

(c) Install the No. 2 hub sleeve assembly so that the No. 2 synchronizer ring slots and No. 2 shifting keys are aligned.

NOTICE:

Be sure to install the No. 2 hub sleeve assembly in the correct direction, as shown in the illustration.

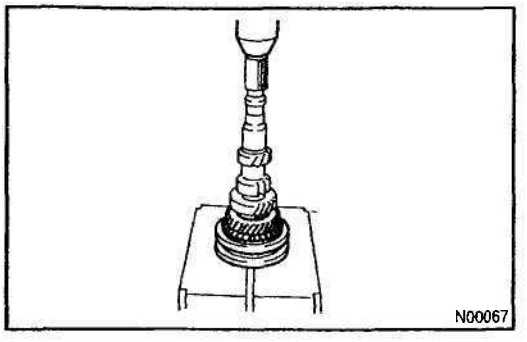

(d) Using a press, install the No. 2 hub sleeve assembly.

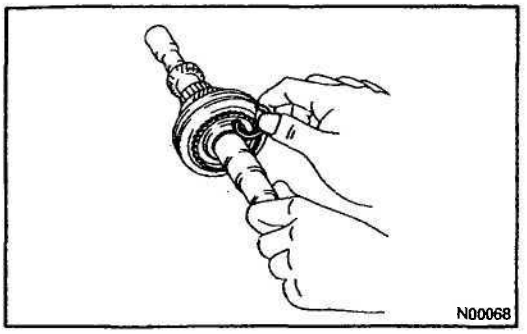

3. INSTALL SNAP RING

(a) Select a snap ring from the table below that will make the thrust clearance of the No. 2 clutch hub less than 0.1 mm (0.0039 in.).

Mark	Thickness mm (in.)	Mark	Thickness mm (in.)
0	2.30 (0.0906)	3	2.48 (0.0976)
1	2.36 (0.0929)	4	2.54 (0.1000)
2	2.42 (0.0953)	5	2.60 (0.1024)

(b) Using a screwdriver and hammer, tap in the snap ring.

HINT:

Take care not to damage the journal surface of the input shaft.

4. INSPECT 3RD GEAR THRUST CLEARANCE
(See page MX–27)

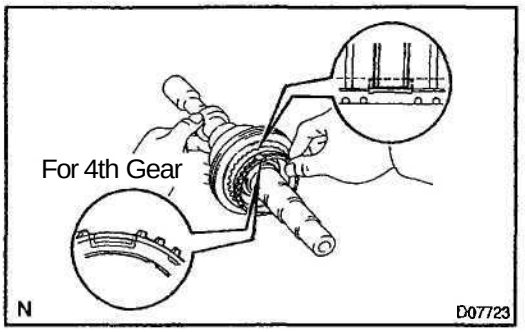

5. INSTALL SPACER, NEEDLE ROLLER BEARING, NO. 2 SYNCHRONIZER RING (FOR 4TH GEAR), 4TH GEAR AND REAR RADIAL BALL BEARING

(a) Install the spacer.

(b) Apply gear oil to the needle roller bearings and install it.

(c) Place the No. 2 synchronizer ring (for the 4th gear) on the No. 2 hub sleeve assembly and align the No. 2 synchronizer ring slots with the No. 2 shifting keys.

(d) Install the 4th gear.

NOTICE:

Distinguish the No. 2 synchronizer ring (for the 4th gear) by the teeth on the synchronizer ring.

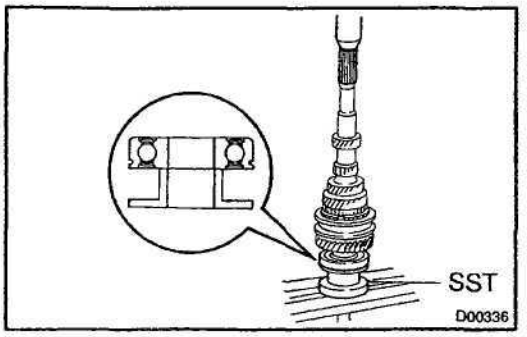

(e) Using SST and a press, install the rear radial ball bearing.
SST 09608–00071

NOTICE:

Be sure to install the rear radial ball bearing in the correct direction, as shown in the illustration.

HINT:

Set SST to the bearing inner race securely.

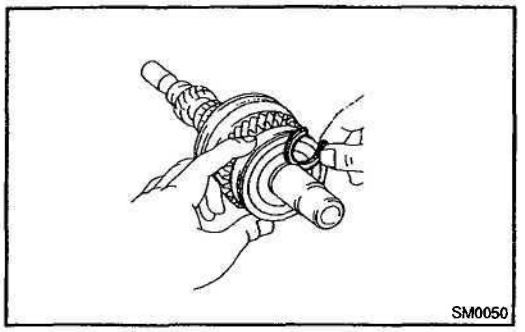

6. INSTALL SNAP RING

(a) Select a snap ring from the table below that will make the thrust clearance of the rear radial ball bearing less than 0.1 mm (0.0039 in.).

Mark	Thickness mm (in.)	Mark	Thickness mm (in.)
A	2.29 (0.0902)	D	2.47 (0.0972)
B	2.35 (0.0925)	E	2.53 (0.0996)
C	2.41 (0.0949)	F	2.59 (0.1020)

(b) Using a screwdriver and hammer, tap in the snap ring.

HINT:

Take care not to damage the journal surface of the input shaft.

7. INSPECT 4TH GEAR THRUST CLEARANCE

(See page MX–27)

OUTPUT SHAFT

COMPONENTS

NDX090-01

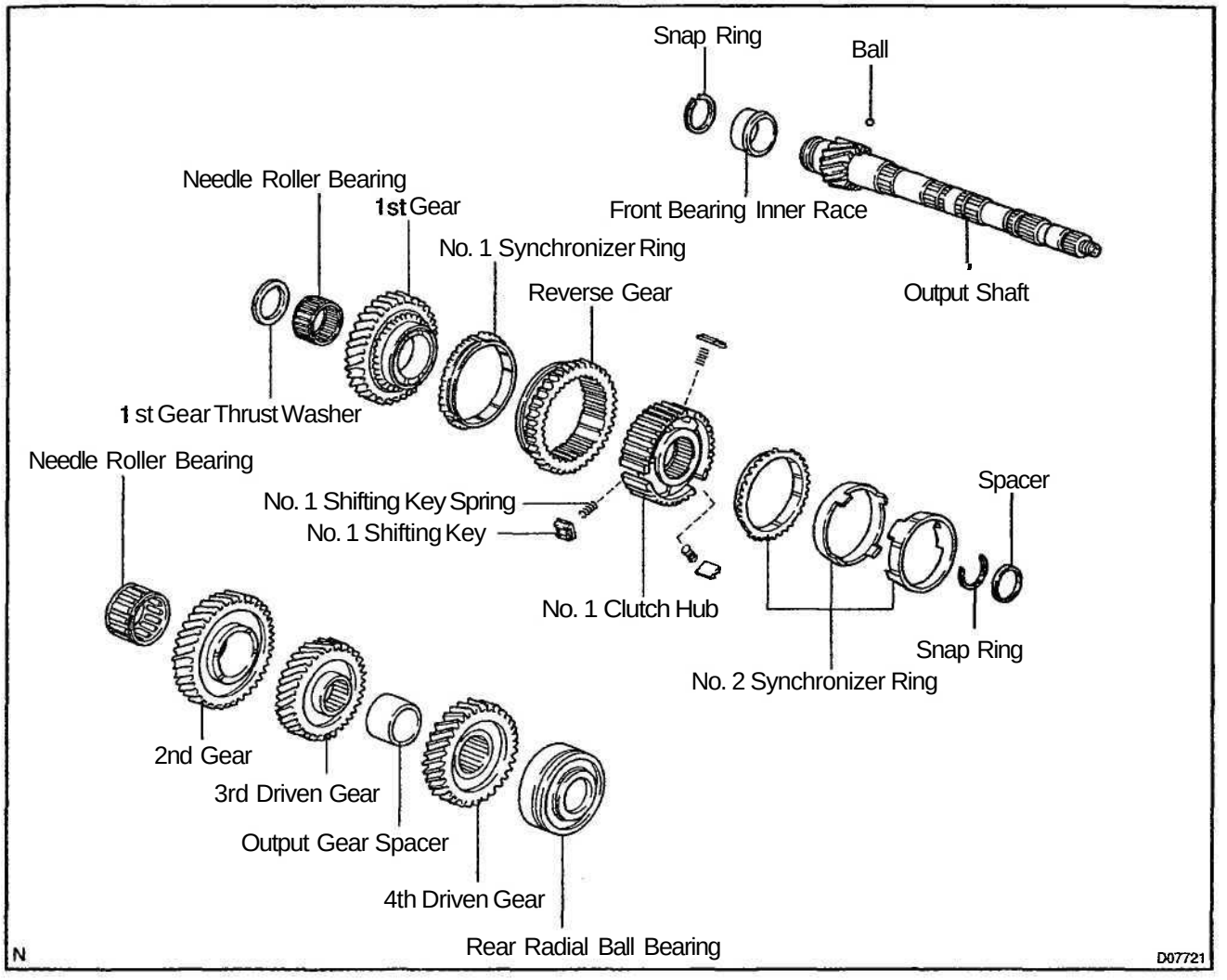

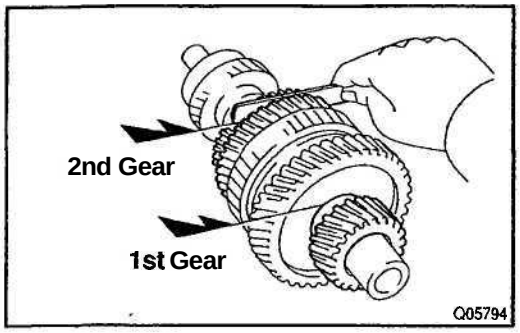

DISASSEMBLY

1. INSPECT 1ST AND 2ND GEARS THRUST CLEARANCE

Using a feeler gauge, measure the thrust clearance.

Standard clearance:
1st gear: 0.10 - 0.40 mm (0.0039 - 0.0157 In.)
2nd gear: 0.10 - 0.55 mm (0.0039 - 0.0217 in.)
Maximum clearance:
1st gear: 0.40 mm (0.0157 in.)
2nd gear: 0.55 mm (0.0217 in.)

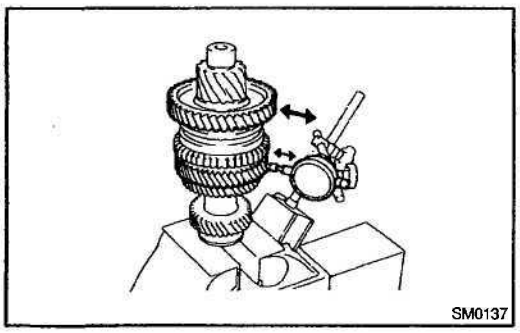

2. INSPECT 1ST AND 2ND GEARS RADIAL CLEARANCE

Using a dial indicator, measure the radial clearance between the gear and shaft.

Standard clearance:
KOYO made:
0.015 - 0.058 mm (0.0006 - 0.0023 in.)
NSK made:
0.015 - 0.056 mm (0.0006 - 0.0022 in.)
Maximum clearance:
KOYO made: 0.058 mm (0.0023 in.)
NSK made: 0.056 mm (0.0022 in.)

If the clearance exceeds the maximum, replace the gear, needle roller bearing or shaft.

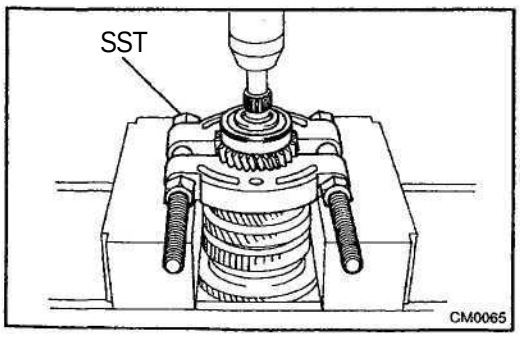

3. REMOVE REAR RADIAL BALL BEARING, 4TH DRIVEN GEAR AND OUTPUT GEAR SPACER FROM OUTPUT SHAFT

(a) Using SST and a press, remove the rear radial ball bearing and 4th driven gear.
SST 09950–00020

HINT:
Support the output shaft assembly by hand so that it will not be dropped off.

(b) Remove the output gear spacer.

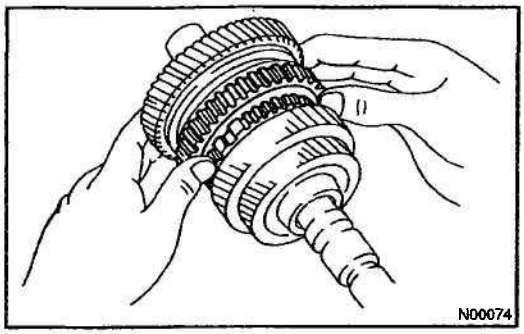

4. REMOVE 3RD DRIVEN GEAR, 2ND GEAR, NEEDLE ROLLER BEARING, SPACER AND NO. 2 SYNCHRONIZER RING

(a) Shift the reverse gear into the 1 st gear.

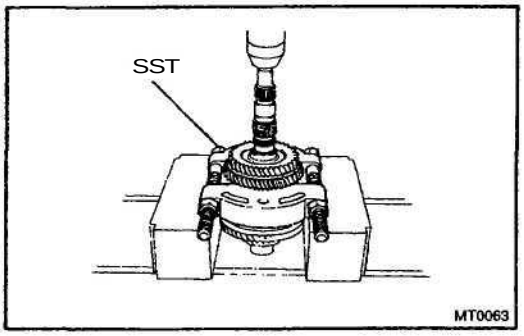

(b) Using SST and a press, remove the 3rd driven gear and 2nd gear.
SST 09950–00020

HINT:
Support the output shaft assembly by hand so that it will not be dropped off.

(c) Remove the needle roller bearing, spacer and No. 2 synchronizer rings.

5. REMOVE SNAP RING

Using 2 screwdrivers and a hammer, tap out the snap ring.

HINT:
Take care not to damage the journal surface of the output shaft.

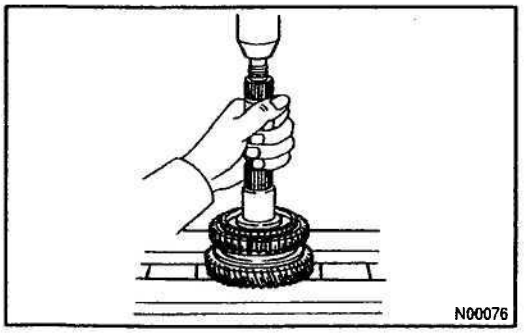

6. REMOVE REVERSE GEAR ASSEMBLY, 1ST GEAR, NO. 1 SYNCHRONIZER RING, NEEDLE ROLLER BEARING, 1ST GEAR THRUST WASHER AND BALL

(a) Using a press, remove the reverse gear assembly, 1 st gear and No. 1 synchronizer ring.

HINT:
Support the output shaft assembly by hand so that it will not be dropped off.

(b) Remove the needle roller bearing and 1st gear thrust washer.

(c) Using a magnetic finger, remove the ball.

7. REMOVE SNAP RING

Using 2 screwdrivers and a hammer, tap out the snap ring.

HINT:
Take care not to damage the journal surface of the output shaft.

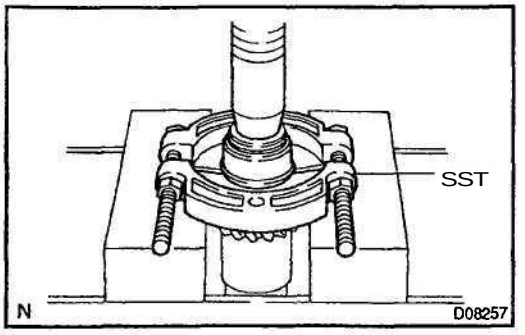

8. REMOVE FRONT BEARING INNER RACE

Using SST and a press, remove the front bearing inner race.

SST 09950–00020

NOTICE:

When replacing the front bearing inner race, replace the output shaft front bearing along with it.

HINT:

Support the output shaft by hand so that it will not be dropped off.

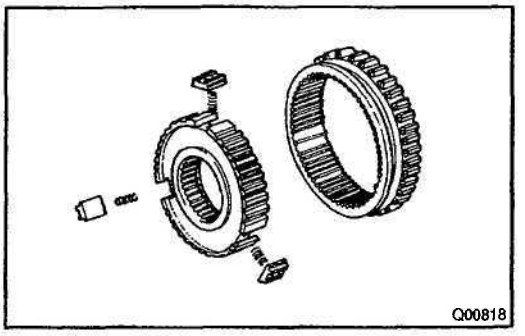

9. DISASSEMBLE REVERSE GEAR ASSEMBLY

(a) Remove the reverse gear from the No. 1 clutch hub.

(b) Remove the 3 No. 1 shifting keys and No. 1 shifting key springs from the No. 1 clutch hub.

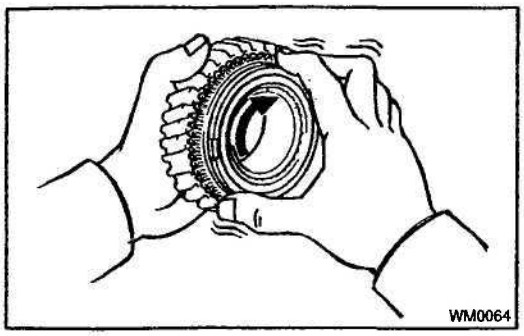

INSPECTION

1. INSPECT 1ST GEAR SYNCHRONIZER RING

(a) Check for wear or damage.

(b) Check the braking effect of the synchronizer ring. Turn the synchronizer ring in one direction while pushing it to the gear cone. Check that the ring locks.

If the braking effect is insufficient, apply a small amount of the fine lapping compound between the synchronizer ring and gear cone. Lightly rub the synchronizer ring and gear cone together.

NOTICE:

Ensure the fine lapping compound is completely washed off after rubbing.

(c) Check again the braking effect of the synchronizer ring.

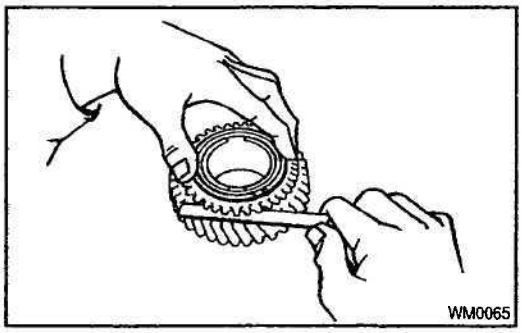

(d) Using a feeler gauge, measure the clearance between the synchronizer ring back and gear spline end.

Minimum clearance: 0.75 mm (0.0295 in.)

If the clearance is less than the minimum, replace the synchronizer ring, and apply a small amount of the fine lapping compound on gear cone.

NOTICE:

Ensure the fine lapping compound is completely washed off after rubbing.

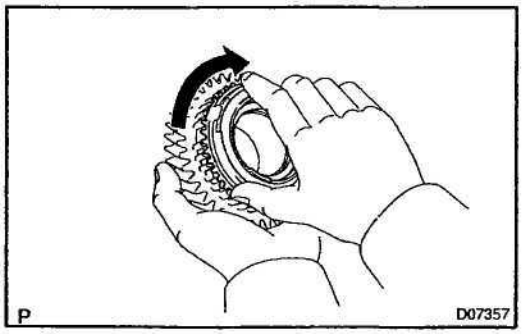

2. INSPECT 2ND GEAR SYNCHRONIZER RING

(a) Check for wear or damage.

(b) Check the braking effect of the synchronizer ring.
Turn the synchronizer ring in one direction while pushing it to the gear cone. Check that the ring locks.

If the braking effect is insufficient, replace the synchronizer ring.

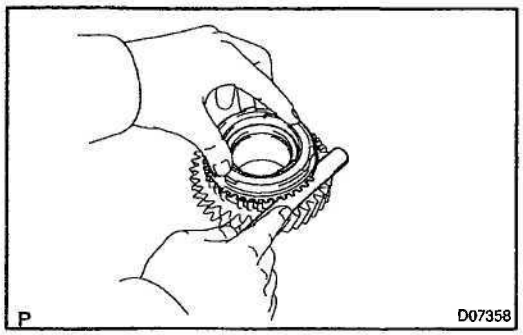

(c) Using a feeler gauge, measure the clearance between the synchronizer ring back and gear spline end.

Minimum clearance: 0.70 mm (0.0276 in.)

If the clearance is less than the minimum, replace the synchronizer ring.

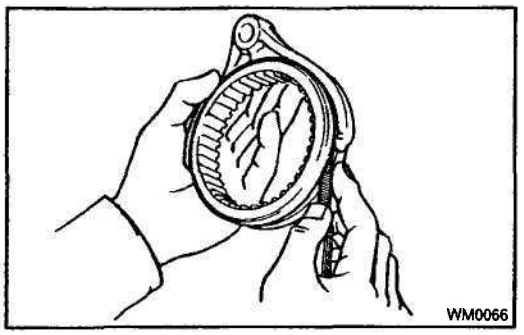

3. INSPECT GEAR SHIFT FORK AND REVERSE GEAR CLEARANCE

Using a feeler gauge, measure the clearance between the reverse gear and gear shift fork.

Maximum clearance: 0.35 mm (0.014 in.)

If the clearance exceeds the maximum, replace the gear shift fork or hub sleeve.

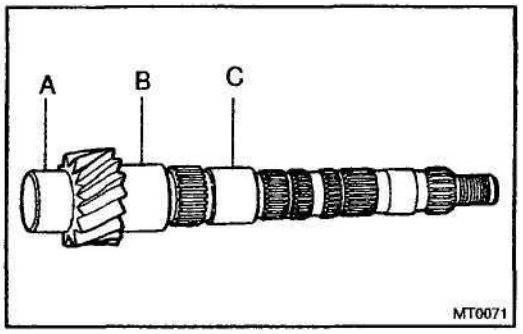

4. INSPECT OUTPUT SHAFT

(a) Check the output shaft for wear or damage.

(b) Using a micrometer, measure the outer diameter of the output shaft journal surface.

Minimum outer diameter:
Part A: 32.985 mm (1.2986 in.)
Part B: 37.985 mm (1.4955 in.)
Part C: 31.985 mm (1.2592 in.)

If the outer diameter is less than the minimum, replace the output shaft.

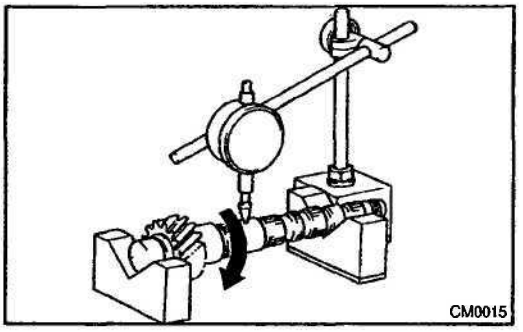

(c) Using a dial indicator, check the shaft runout.

Maximum runout: 0.03 mm (0.0012 in.)

If the runout exceeds the maximum, replace the output shaft.

MX09R-01

REASSEMBLY

HINT:
Coat all of the sliding and rotating surfaces with gear oil before reassembly.

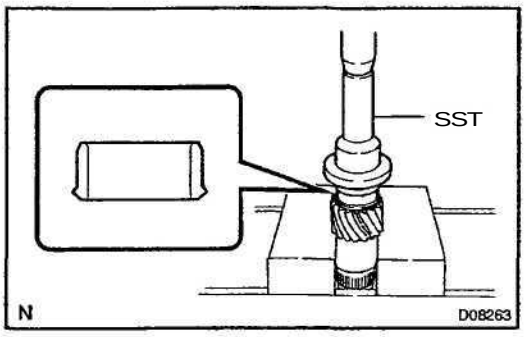

1. INSTALL FRONT BEARING INNER RACE

Using SST and a press, install the front bearing inner race.

SST 09223–50010

NOTICE:

Be sure to install the front bearing inner race in the correct direction, as shown in the illustration.

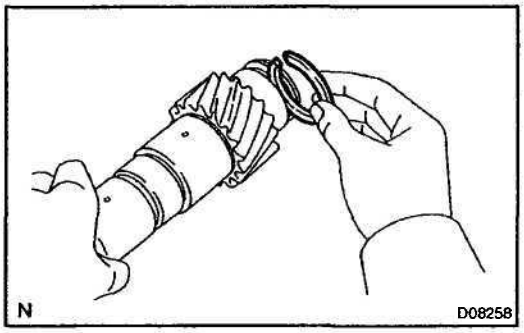

2. INSTALL SNAP RING

(a) Select a snap ring from the table below that will make the thrust clearance of the front bearing inner race less than 0.1 mm (0.0039 in.).

Mark	Thickness mm (in.)	Mark	Thickness mm (in.)
7	1.85 (0.0728)	3	2.05 (0.0807)
8	1.90 (0.0748)	4	2.10 (0.0827)
1	1.95 (0.0768)	5	2.15 (0.0846)
2	2.00 (0.0787)	6	2.20 (0.0866)

(b) Using a screwdriver and hammer, tap in the snap ring.

HINT:
Take care not to damage the journal surface of the output shaft.

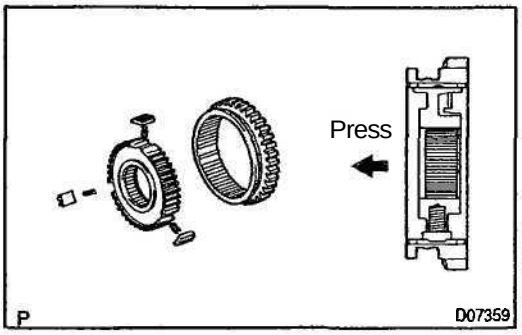

3. ASSEMBLE REVERSE GEAR ASSEMBLY

(a) Install the 3 No. 1 shifting key springs and No. 1 shifting keys to the No. 1 clutch hub.

(b) Install the No. 1 clutch hub to the reverse gear.

NOTICE:

Assemble the No. 1 clutch hub and reverse gear in the direction shown in the illustration.

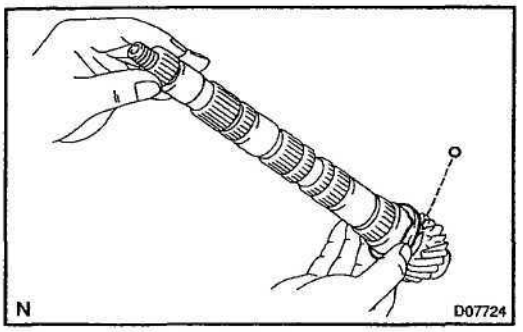

4. INSTALL BALL, 1ST GEAR THRUST WASHER, NEEDLE ROLLER BEARING, 1ST GEAR, NO. 1 SYNCHRONIZER RING AND REVERSE GEAR ASSEMBLY TO OUTPUT SHAFT

(a) Using a magnetic finger, install the ball to the output shaft.

(b) Fit the 1st gear thrust washer groove securely over the locking ball when installing the thrust on the output shaft.

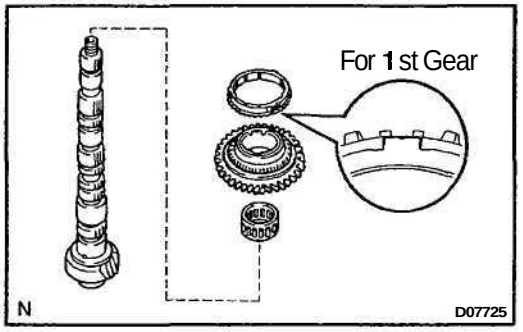

(c) Apply gear oil to the needle roller bearing and install it.

(d) Install the 1st gear and No. 1 synchronizer ring.

NOTICE:

Distinguish the No. 1 synchronizer ring by the teeth on the synchronizer ring.

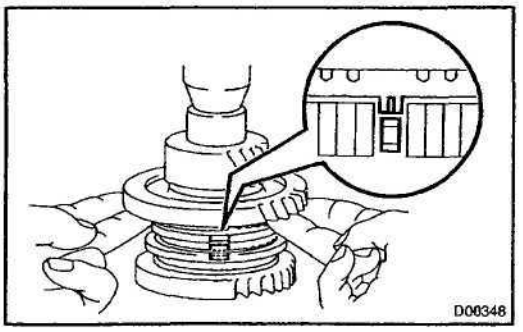

(e) Place the reverse gear assembly and align the No. 1 synchronizer ring slots with the No. 1 shifting keys.

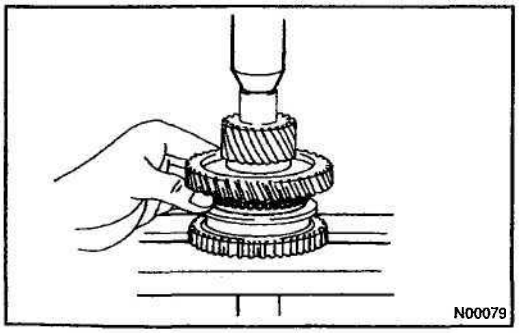

(f) Using a press, install the reverse gear assembly.

NOTICE:

- **Be sure to install the reverse gear assembly in the correct direction, as shown in the illustration.**
- **When installing, make sure that the ball is placed in a groove of the 1st gear thrust washer.**

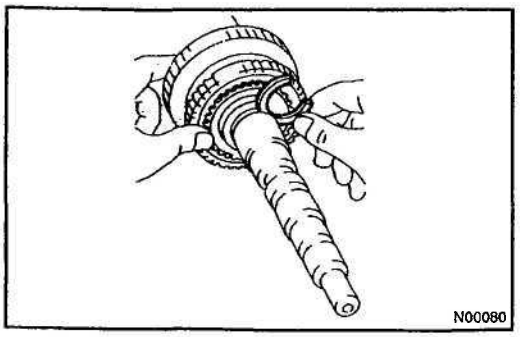

5. INSTALL SNAP RING

(a) Select a snap ring from the table below that will make the thrust clearance of the No. 1 clutch hub less than 0.1 mm (0.0039 in.).

Mark	Thickness mm (in.)	Mark	Thickness mm (in.)
A	2.50 (0.0984)	D	2.68 (0.1055)
B	2.56 (0.1008)	E	2.74 (0.1079)
C	2.62 (0.1031)	F	2.80 (0.1102)

(b) Using a screwdriver and hammer, tap in the snap ring.

HINT:
Take care not to damage the journal surface of the output shaft.

6. INSPECT 1ST GEAR THRUST CLEARANCE
(See page MX–35)

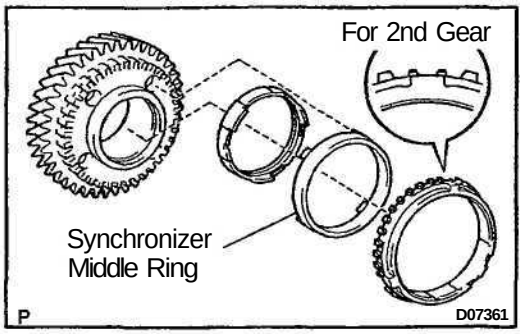

7. INSTALL SPACER, NEEDLE ROLLER BEARING, NO. 2 SYNCHRONIZER RING, 2ND GEAR AND 3RD DRIVEN GEAR

(a) Install the spacer.
(b) Apply gear oil to the needle roller bearing and install it.
(c) Place the No. 2 synchronizer rings on the 2nd gear.

NOTICE:

- **Properly fit the synchronizer middle ring claws into the holes in the 2nd gear.**
- **Distinguish the No. 2 synchronizer ring by the teeth on the synchronizer ring.**

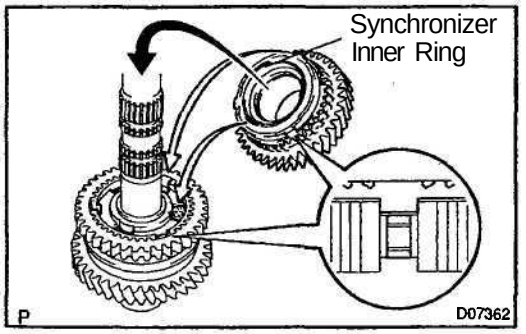

(d) Place the 2nd gear with the No. 2 synchronizer rings and align the No. 2 synchronizer ring slots with the No. 1 shifting keys.

NOTICE:
Fit the synchronizer inner ring claws into the slots in the No. 1 clutch hub.

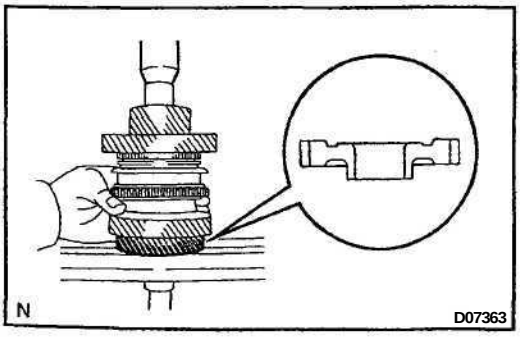

(e) Using a press, install the 3rd driven gear.

NOTICE:
Be sure to install the 3rd driven gear in the correct direction, as shown in the illustration.

8. INSPECT 2ND GEAR THRUST CLEARANCE
(See page MX–35)

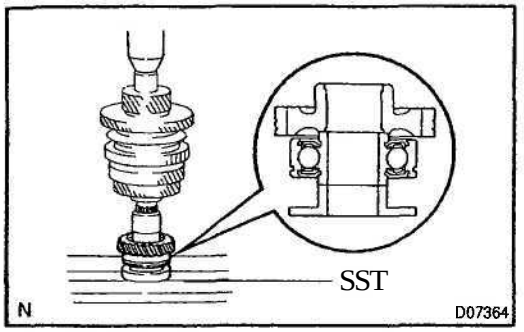

9. **INSTALL OUTPUT GEAR SPACER, 4TH DRIVEN GEAR AND REAR RADIAL BALL BEARING**

(a) Install the output gear spacer.

(b) Using SST and a press, install the 4th driven gear and rear radial ball bearing.

SST 09608–00071

NOTICE:

Be sure to install the 4th driven gear and rear radial ball bearing in the correct direction, as shown in the illustration.

HINT:

Set SST to the bearing inner race securely.

SHIFT AND SELECT LEVER SHAFT

COMPONENTS

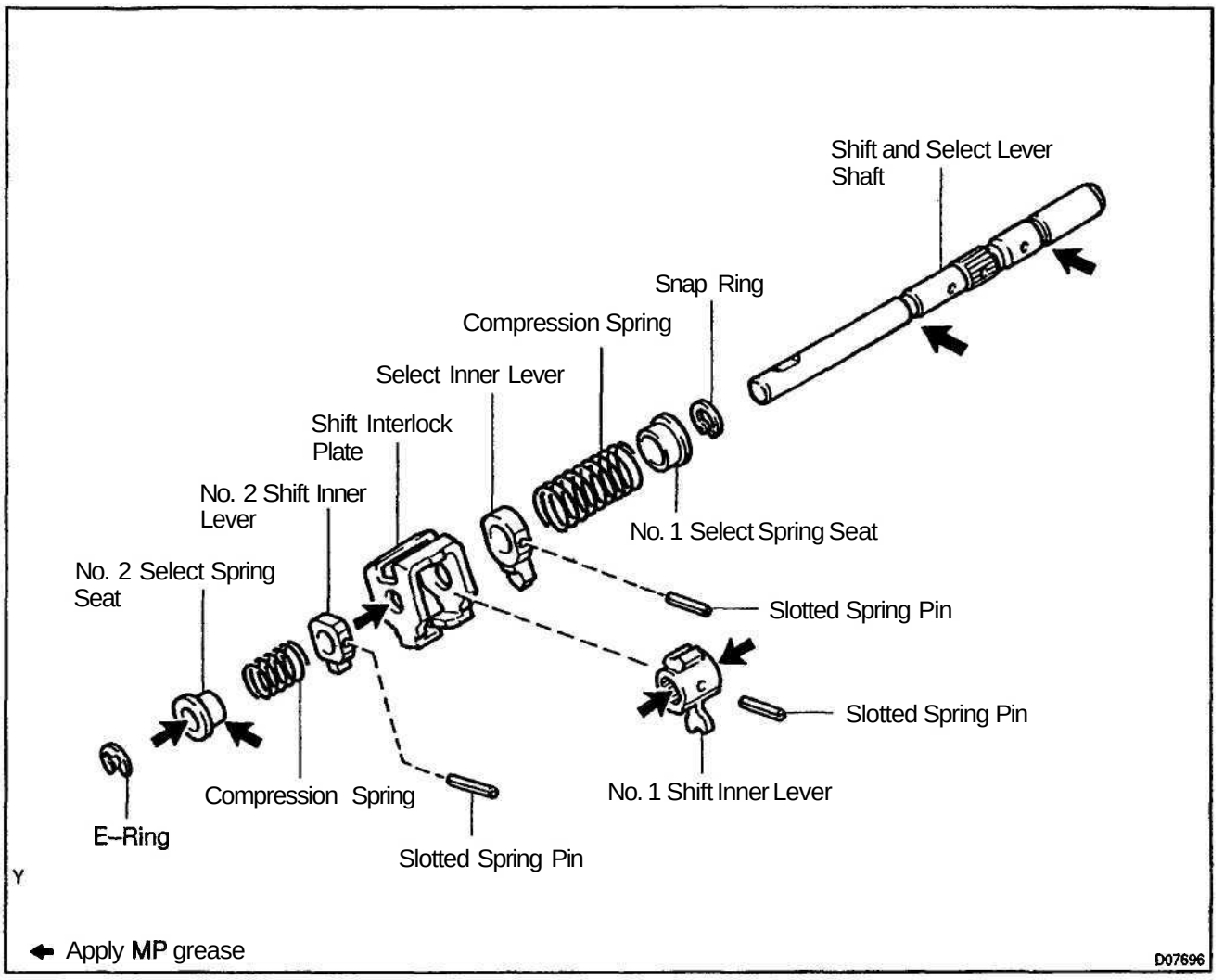

DIFFERENTIAL CASE

COMPONENTS

MX095-01

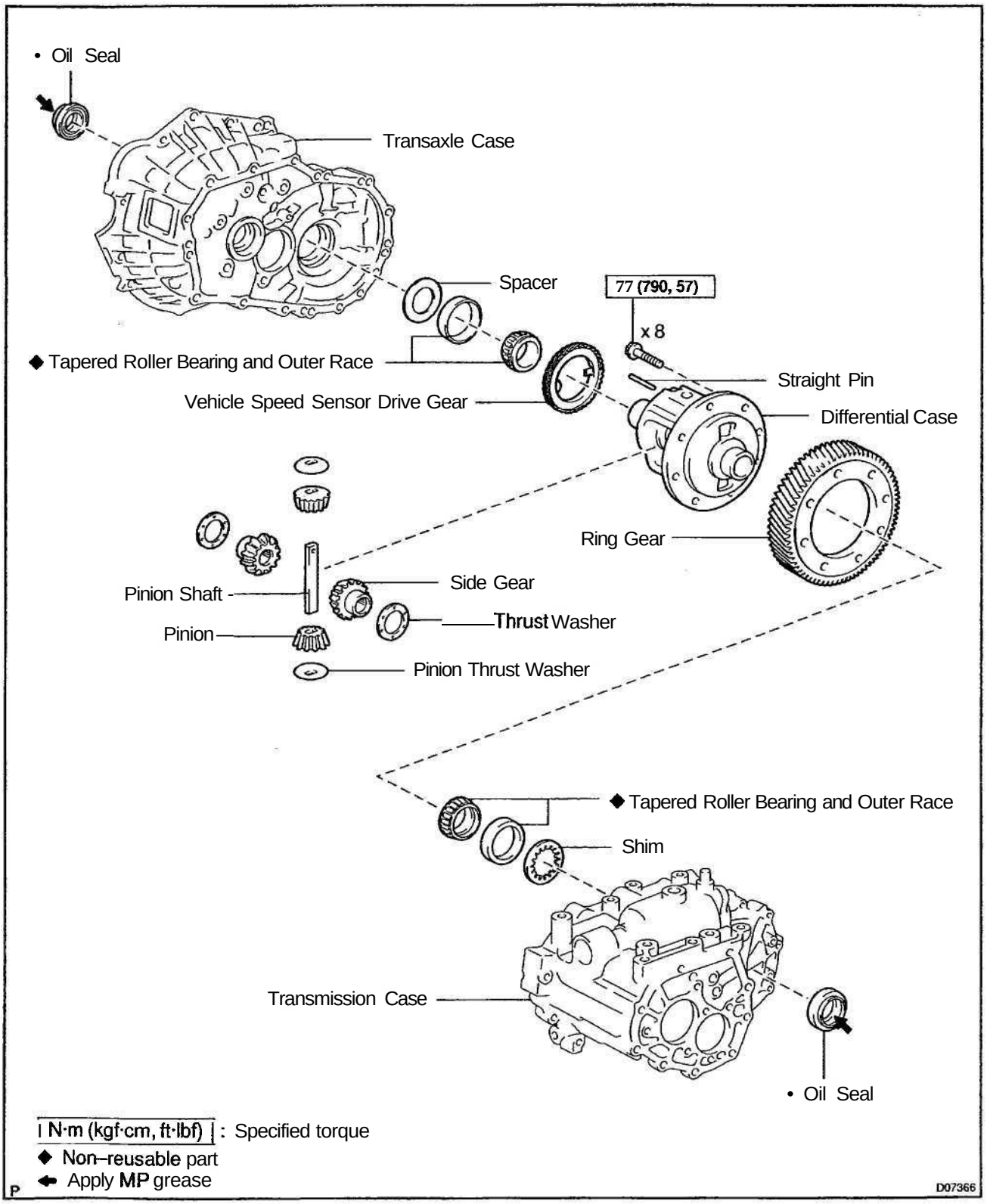

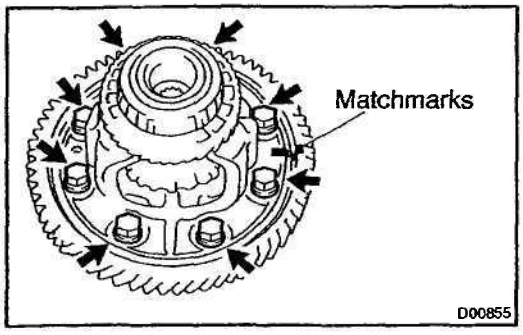

DISASSEMBLY

1. REMOVE RING GEAR

(a) Place matchmarks on the ring gear and differential case.
(b) Remove the 8 bolts.
(c) Using a copper hammer, tap on the ring gear to remove it from the differential case.

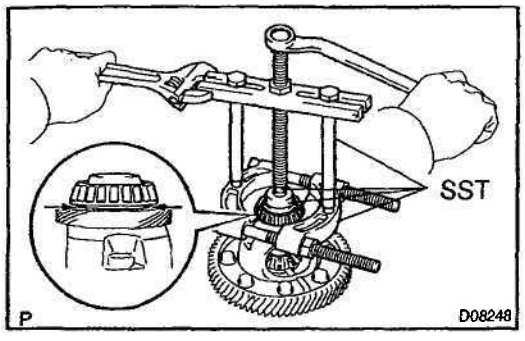

2. Vehicle speed sensor drive gear side: REMOVE TAPERED ROLLER BEARING FROM DIFFERENTIAL CASE

(a) Using SST, remove the tapered roller bearing.
SST 09950–00020, 09950–00030, 09950–40011 (09957–04010), 09950–60010 (09951–00350)

HINT:
Set the claw of SST to the bearing inner race securely.
(b) Remove the vehicle speed sensor drive gear.

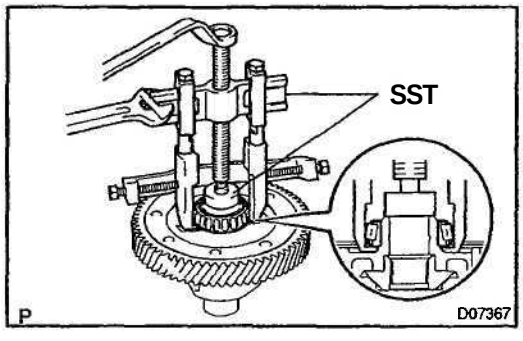

3. Ring gear side: REMOVE TAPERED ROLLER BEARING FROM DIFFERENTIAL CASE

Using SST, remove the tapered roller bearing.
SST 09950–40011, 09950–60010 (09951–00350)

HINT:
Set the claw of SST to the bearing inner race at the position where the differential case is indented.

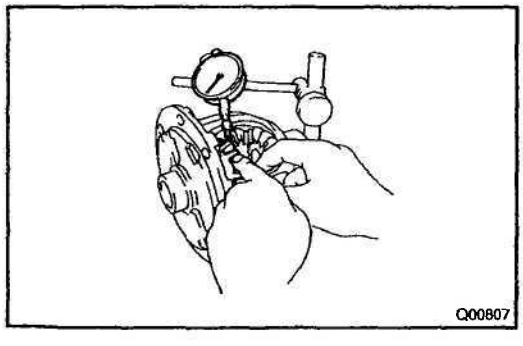

4. INSPECT SIDE GEAR BACKLASH

Using a dial indicator, measure the backlash of one side gear while holding one pinion toward the differential case.

Standard backlash:
0.05 - 0.20 mm (0.0020 - 0.0079 in.)

If the backlash is not within the specification, install the correct thrust washer to the side gears.

5. DISASSEMBLE DIFFERENTIAL CASE

(a) Using a pin punch and hammer, drive out the straight pin.
(b) Remove the pinion shaft from the differential case.
(c) Remove the 2 pinions and side gears with the 4 thrust washers from each gear.

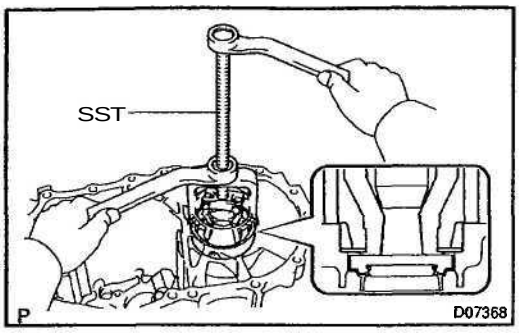

6. Transmission case side:
IF NECESSARY, REPLACE OIL SEAL AND TAPERED ROLLER BEARING OUTER RACE

(a) Using SST, pull out the tapered roller bearing outer race and shim.
SST 09612–65014

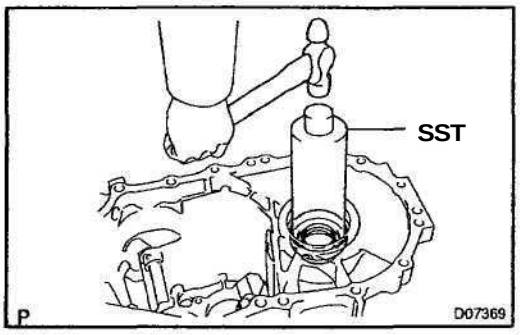

(b) Using SST and a hammer, drive out the oil seal.
SST 09226–10010

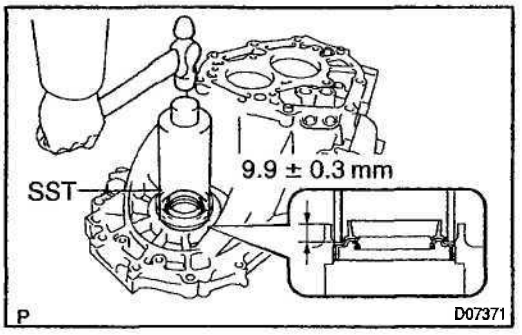

(c) Using SST and a hammer, drive in a new oil seal.
SST 09226–10010
Drive in depth: 9.9 ± 0.3 mm (0.390 ± 0.012 in.)

(d) Coat the lip of the oil seal with MP grease.

(e) Place the shim into the differential case.

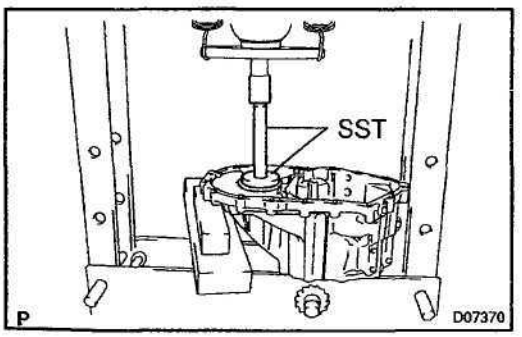

(f) Using SST and a press, install the tapered roller bearing outer race.
SST 09950–60020 (09951–00710), 09950-70010 (09951–07150)

NOTICE:
When replacing the tapered roller bearing outer race, replace the tapered roller bearing along with it.

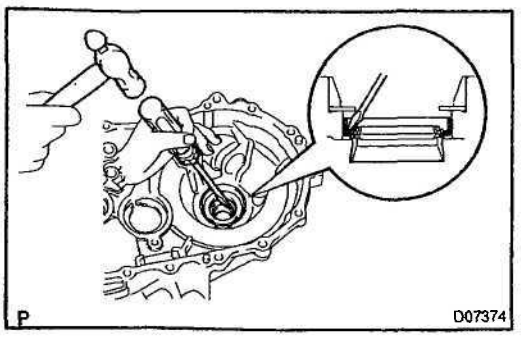

7. Transaxle case side:
IF NECESSARY, REPLACE OIL SEAL AND TAPERED ROLLER BEARING OUTER RACE

(a) Using a screwdriver and hammer, drive out the oil seal.

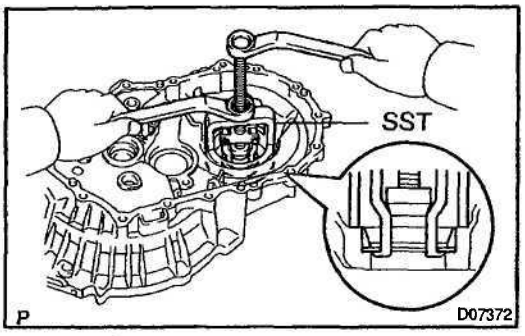

(b) Using SST, pull out the tapered roller bearing outer race and spacer.
SST 09612-65014

(c) Place the spacer into the differential case.

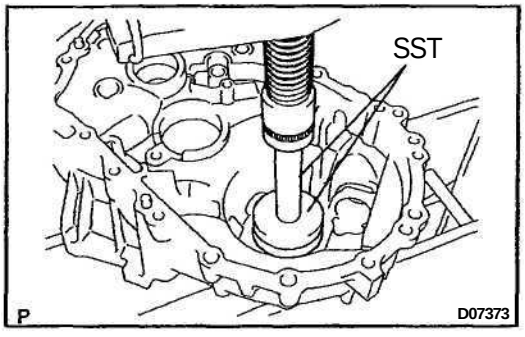

(d) Using SST and a press, install the tapered roller bearing outer race.
SST 09950-60020 (09951-00680), 09950-70010 (09951-07150)

NOTICE:
When replacing the tapered roller bearing outer race, replace the tapered roller bearing along with it.

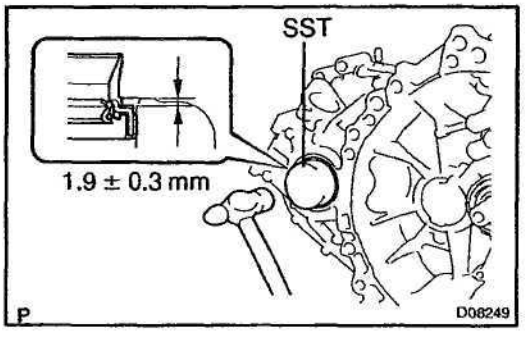

(e) Using SST and a hammer, drive in a new oil seal.
SST 09710-28021 (09710-08041)
Drive in depth: 1.9 ± 0.3 mm (0.075 ± 0.012 in.)

(f) Coat the lip of the oil seal with MP grease.

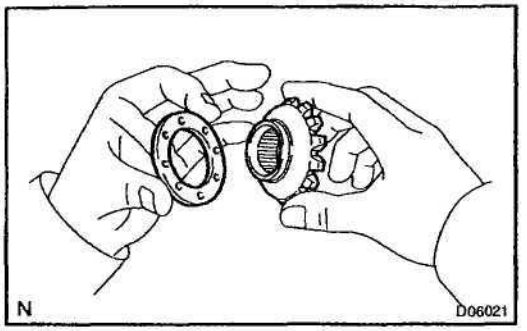

REASSEMBLY

1. ASSEMBLE DIFFERENTIAL CASE

(a) Install the correct thrust washers and side gears.
Refer to the table below, select thrust washers which will ensure that the backlash is within the specification. Try to select washers of the same size for both sides.
Standard backlash:
0.05 - 0.20 mm (0.0020 - 0.0079 in.)

Thickness mm (in.)	Thickness mm (in.)
0.95 (0.0374)	1.10 (0.0433)
1.00 (0.0394)	1.15 (0.0453)
1.05 (0.0413)	1.20 (0.0472)

(b) Install the thrust washers and side gears in the differential case.

(c) Install the pinion shaft.

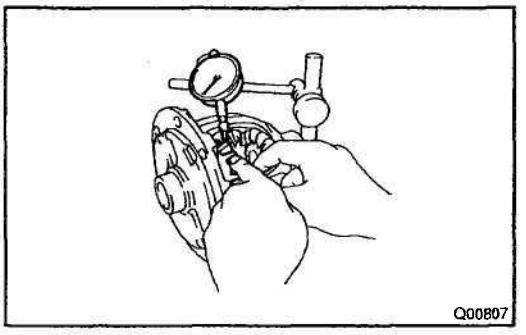

(d) Using a dial indicator, check the side gear backlash.
Measure the side gear backlash while holding one pinion toward the differential case.
Standard backlash:
0.05 - 0.20 mm (0.0020 - 0.0079 in.)

If the backlash is not within the specification, install a thrust washer of different thickness.

(e) Using a pin punch and hammer, drive in the straight pin through the differential case and hole in the pinion shaft.

(0 Using a chisel and hammer, caulk the pin holes around the circumference of the differential case.

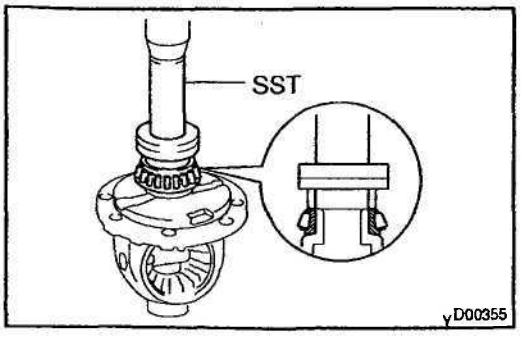

2. Ring gear side:
INSTALL TAPERED ROLLER BEARING

Using SST and a press, install the tapered roller bearing.
SST 09350–32014 (09351-32120, 09351-32140)

NOTICE:
When replacing the tapered roller bearing outer race, replace the tapered roller bearing along with it.

HINT:
Set SST to the bearing inner race securely.

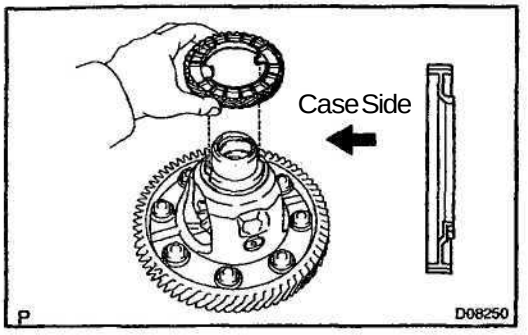

3. Vehicle speed sensor drive gear side: INSTALL TAPERED ROLLER BEARING

(a) Place the vehicle speed sensor drive gear in position to stop it turning, and install the vehicle speed sensor drive gear.

NOTICE:

Be sure to install the vehicle speed sensor drive gear in the correct direction, as shown in the illustration.

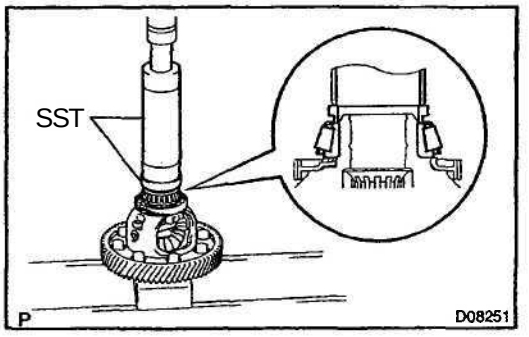

(b) Using SST and a press, install a new side bearing.
SST 09316–60011 (09316–00011), 09350–32014 (09351-32120)

NOTICE:

When replacing the tapered roller bearing outer race, replace the tapered roller bearing along with it.

HINT:

Set SST to the bearing inner race securely.

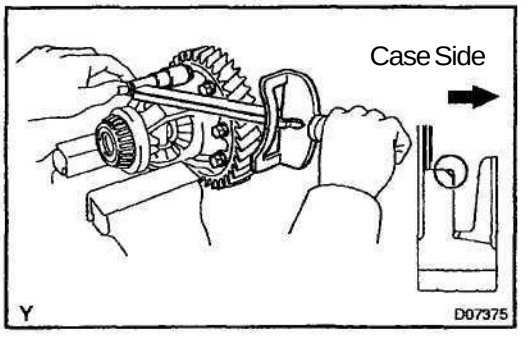

4. INSTALL RING GEAR ON DIFFERENTIAL CASE

(a) Clean the contact surface of the differential case.
(b) Heat the ring gear in boiling water.
(c) Carefully take the ring gear out of the water.
(d) After the moisture on the ring gear has completely evaporated, quickly install the ring gear to the differential case.

HINT:

Align the matchmarks on the differential case and contact the ring gear.

(e) Temporarily install the 8 set bolts.

CAUTION:

The ring gear set bolts should not be tightened until the ring gear has cooled sufficiently.

(f) After the ring gear has cooled sufficiently, torque the ring gear set bolts uniformly at a time.
Torque: 77 N·m (790 kgf·cm, 57 ft·lbf)

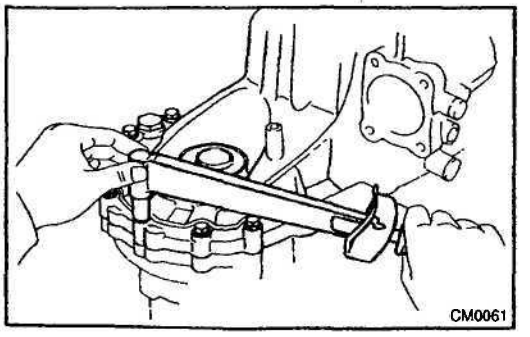

5. INSPECT DIFFERENTIAL TAPERED ROLLER BEARING PRELOAD

NOTICE:

Perform this only when replacing the tapered roller bearing and outer race of the differential case.

(a) Install the differential case assembly to the transaxle case.
(b) Install the transmission case to the transaxle case with the 16 bolts.
Torque: 29 N·m (300 kgf·cm, 22 ft·lbf)

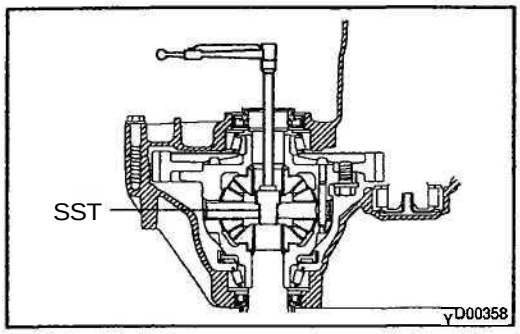

(c) Using SST and a torque wrench, turn the differential case assembly right and left 2 or 3 times to allow the bearings to settle.
SST 09564–32011

(d) Using SST and a torque wrench, measure the preload.
SST 09564-32011
Preload (at starting):
New bearing
0.8 – 1.6 N·m (8 – 16 kgf·cm, 6.9 – 13.9 in.·lbf)
Reused bearing
0.5 – 1.0 N·m (5 – 10 kgf·cm, 4.3 - 8.7 in.·lbf)

If the preload is not within the specification, remove the transmission case side outer race of the tapered roller bearing with SST (See page MX–46). Select an appropriate shim.
HINT:
The preload will change by about 0.3 - 0.4 N·m (3 – 4 kgf·cm, 2.6 - 3.5 in.·lbf) corresponding to a change of 0.05 mm (0.0020 in.) in shim thickness.

Mark	Thickness mm (in.)	Mark	Thickness mm (in.)
AA	2.10 (0.0827)	LL	2.60 (0.1024)
BB	2.15 (0.0846)	MM	2.65 (0.1043)
CC	2.20 (0.0866)	NN	2.70 (0.1063)
DD	2.25 (0.0886)	PP	2.75 (0.1083)
EE	2.30 (0.0906)	QQ	2.80 (0.1102)
FF	2.35 (0.0925)	RR	2.85 (0.1122)
GG	2.40 (0.0945)	SS	2.90 (0.1142)
HH	2.45 (0.0965)	TT	2.95 (0.1161)
JJ	2.50 (0.0984)	UU	3.00 (0.1181)
KK	2.55 (0.1004)	–	–

(e) Remove the 16 bolts and transmission case.

(f) Remove the differential case assembly.

SHIFT LEVER AND CONTROL CABLE

COMPONENTS

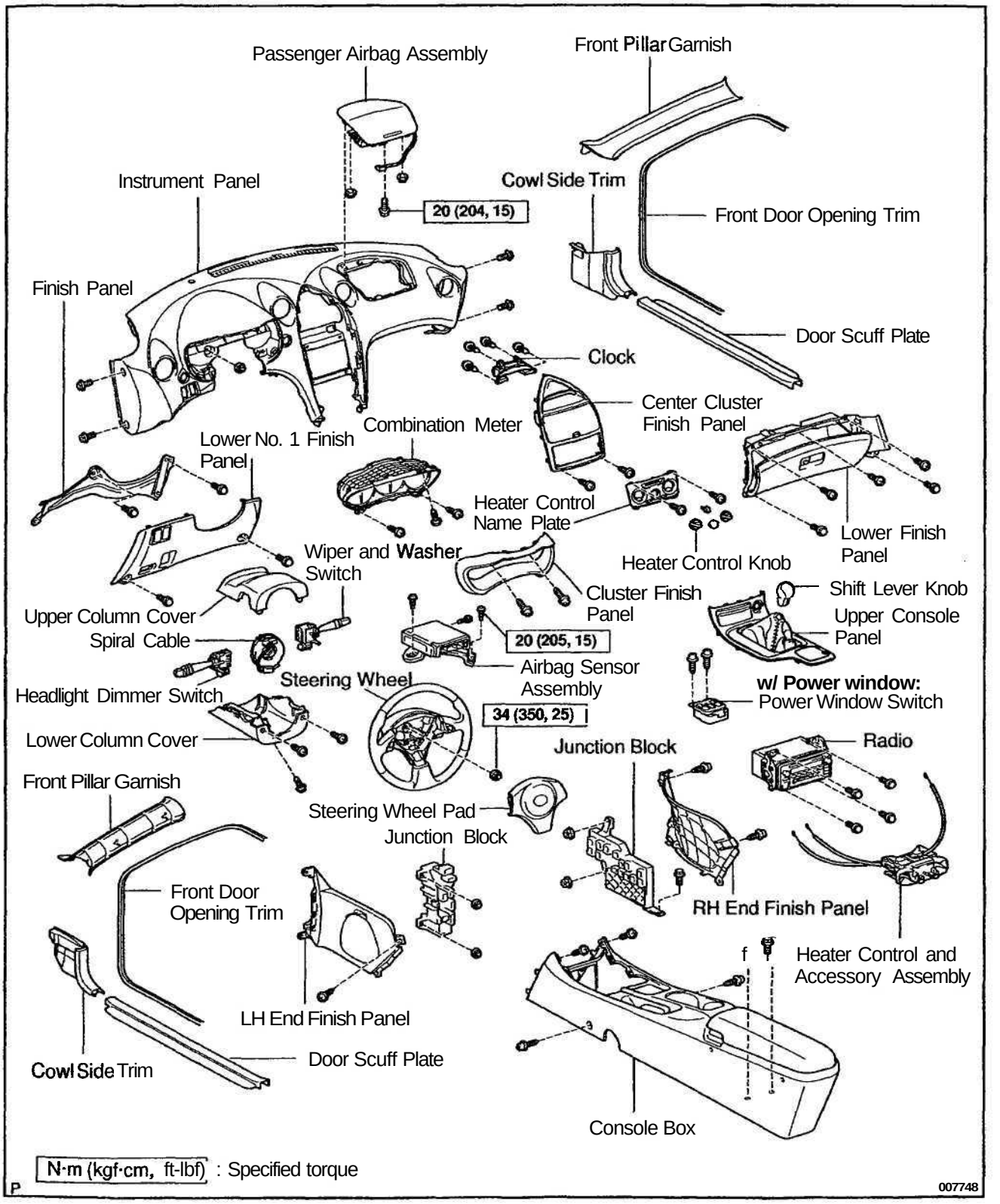

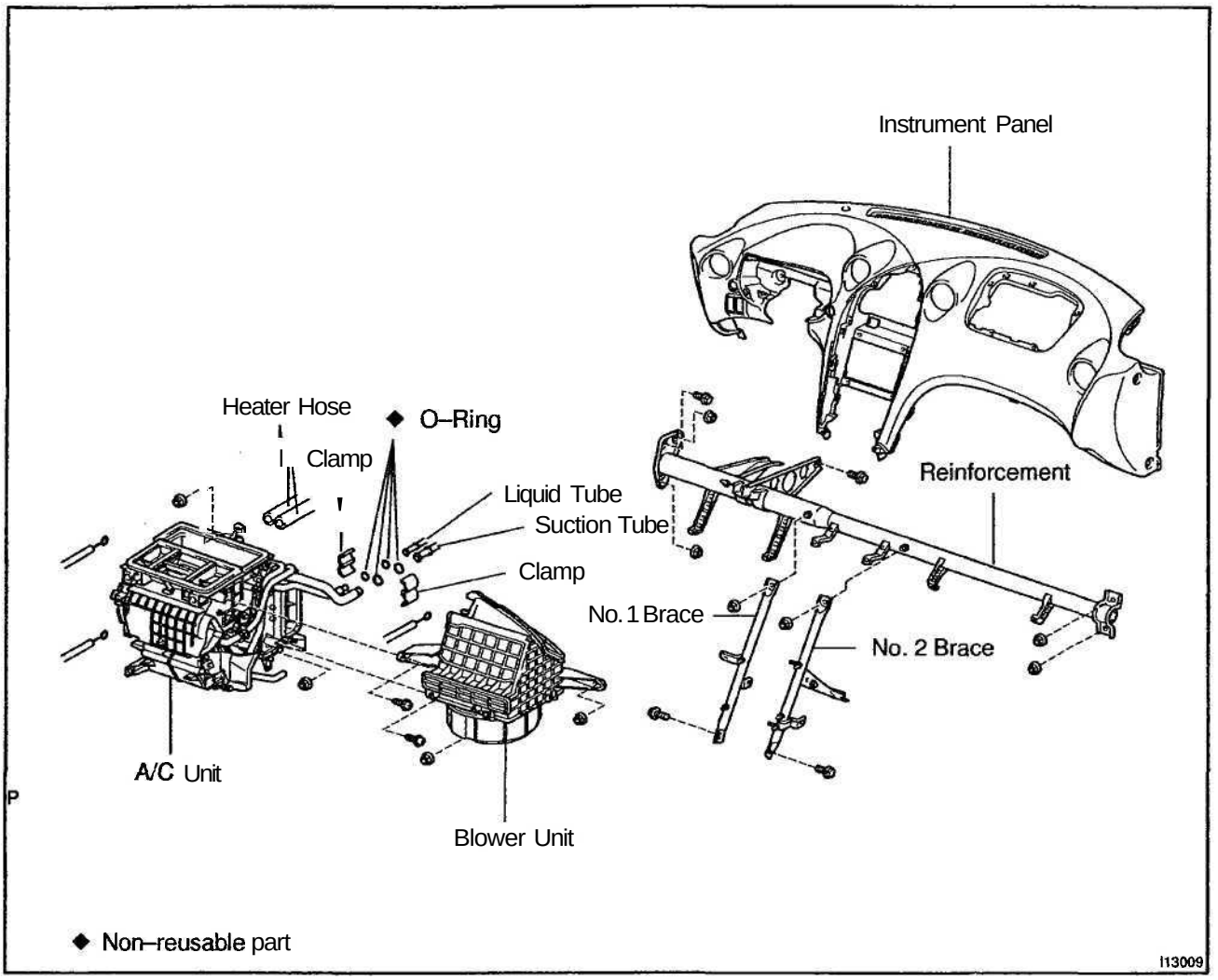
Instrument Panel
Heater Hose
◆ O–Ring
Clamp
Liquid Tube
Suction Tube
Clamp
Reinforcement
No. 1 Brace
No. 2 Brace
A/C Unit
Blower Unit
◆ Non–reusable part
I13009

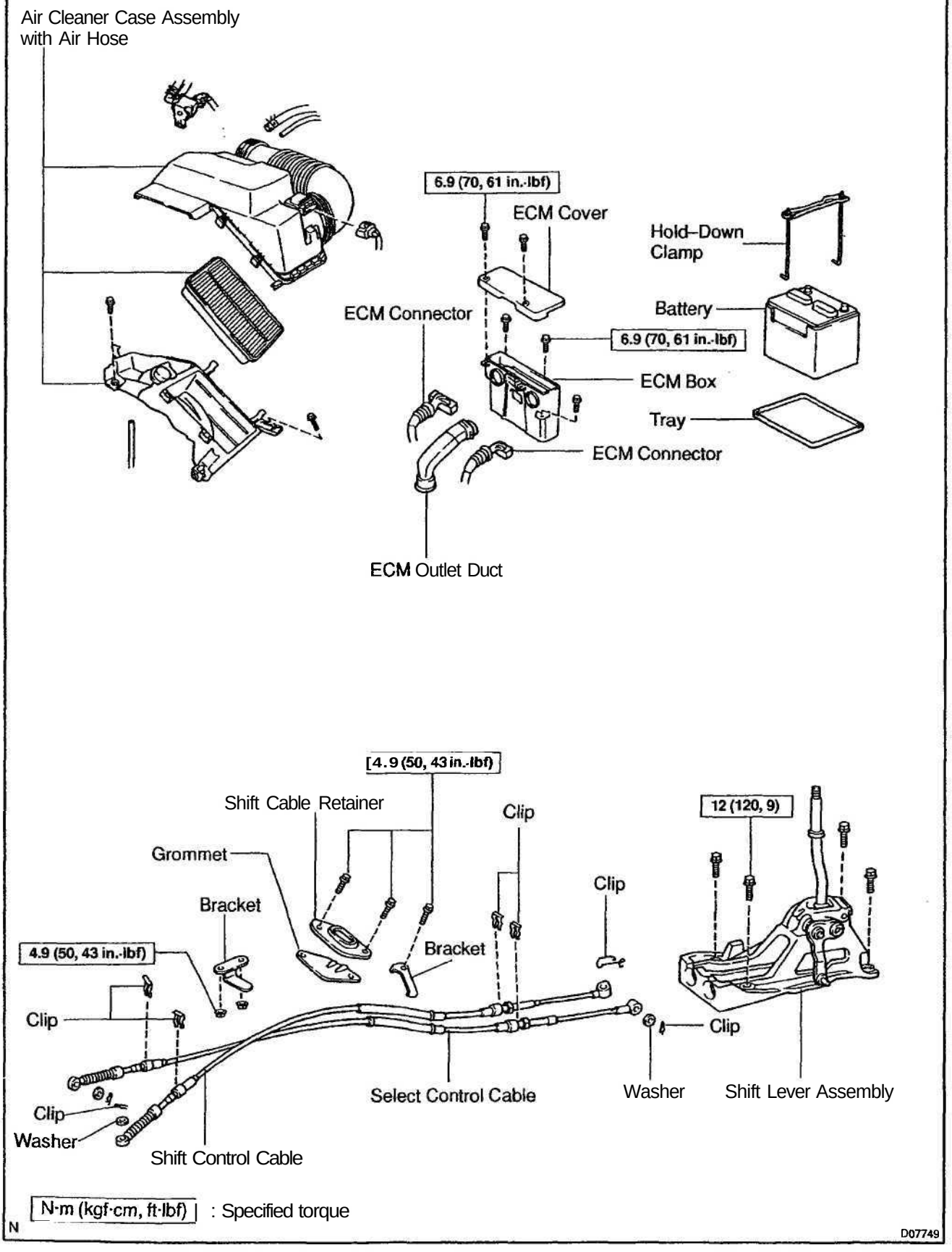
Air Cleaner Case Assembly with Air Hose
6.9 (70, 61 in.-lbf)
ECM Cover
Hold-Down Clamp
ECM Connector
Battery
6.9 (70, 61 in.-lbf)
ECM Box
Tray
ECM Connector
ECM Outlet Duct
4.9 (50, 43 in.-lbf)
Shift Cable Retainer
Clip
12 (120, 9)
Grommet
Clip
Bracket
Bracket
4.9 (50, 43 in.-lbf)
Clip
Clip
Clip
Washer
Select Control Cable
Washer
Shift Lever Assembly
Shift Control Cable
N·m (kgf·cm, ft·lbf) : Specified torque
N
D07749

MANUAL TRANSAXLE (C60)

TROUBLESHOOTING MX–1
MANUAL TRANSAXLE UNIT MX–2
MANUAL TRANSAXLE ASSEMBLY MX-9
INPUT SHAFT MX-29
OUTPUT SHAFT MX–37
SHIFT AND SELECT LEVER SHAFT MX–47
DIFFERENTIAL CASE MX–48
REVERSE SHIFT WARNING
BUZZER SYSTEM MX–55
SHIFT LEVER AND CONTROL CABLE MX-57

MX

TROUBLESHOOTING

PROBLEM SYMPTOMS TABLE

MX01B–02

Use the table below to help you find the cause of the problem. The numbers indicate the priority of the likely cause of the problem. Check each part in order. If necessary, replace these parts.

Symptom	Suspect Area	See page
Noise	1. Oil (Level low)	MX–4
	2. Oil (Wrong)	MX–4
	3. Gear (Worn or damaged)	MX-9
	4. Bearing (Worn or damaged)	MX-9
Oil leakage	1. Oil (Level too high)	MX–4
	2. Gasket (Damaged)	MX-9
	3. Oil seal (Worn or damaged)	MX-9
	4. O–Ring (Worn or damaged)	MX-9
Hard to shift or will not shift	1. Control cable (Faulty)	MX-57
	2. Synchronizer ring (Worn or damaged)	MX-24
		MX–32
		MX–41
	3. Shifting key spring (Damaged)	MX-24
		MX-32
		MX–41
Jumps out of gear	1. Locking ball spring (Damaged)	MX-24
	2. Gear shift fork (Worn)	MX-24
	3. Gear (Worn or damaged)	MX-24
	4. Bearing (Worn or damaged)	MX-24
Reverse shift warning buzzer does not sound	1. GAUGE fuse	BE–10
	2. Ignition switch	BE–13
	3. Back–up light switch	MX-55
	4. Reverse shift warning buzzer	MX-55
	5. Wire harness	–

MANUAL TRANSAXLE UNIT

COMPONENTS

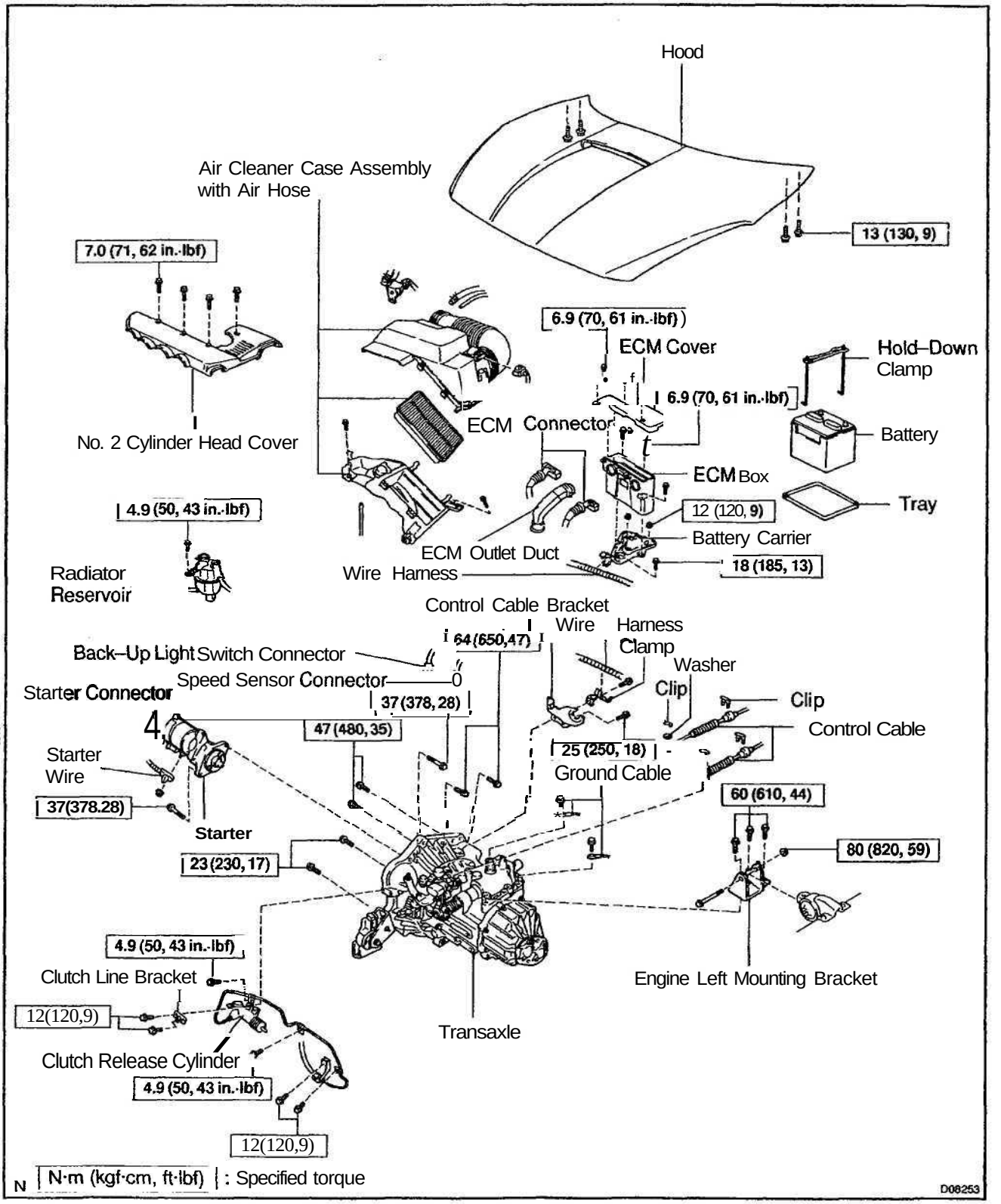

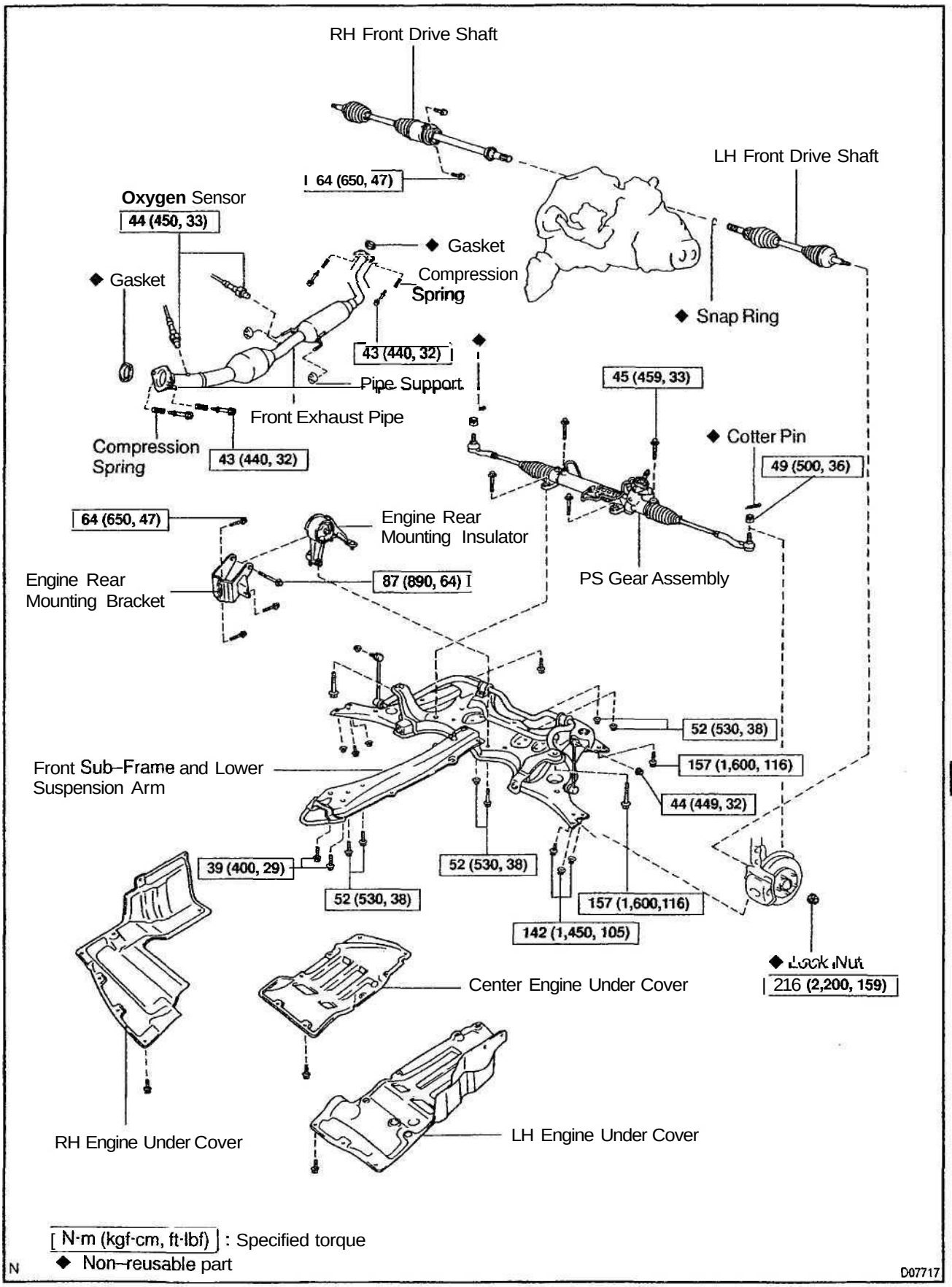

[N·m (kgf·cm, ft·lbf)] : Specified torque
◆ Non–reusable part

N

D07717

MX06Y-01

REMOVAL

1. REMOVE HOOD

HINT:

At the time of installation, please refer to the following item.

Adjust the hood. (See page BO–9)

2. REMOVE NO. 2 CYLINDER HEAD COVER

Remove the 4 bolts and No. 2 cylinder head cover.

Torque: 7.0 N·m (71 kgf·cm, 62 in.·lbf)

3. DISCONNECT RADIATOR RESERVOIR

Remove the bolt and disconnect the radiator reservoir.

Torque: 4.9 N·m (50 kgf-cm, 43 in.·lbf)

4. REMOVE BATTERY

5. REMOVE AIR CLEANER CASE ASSEMBLY WITH AIR HOSE AND ECM BOX

(a) Remove the 2 bolts and ECM cover.

Torque: 6.9 N·m (70 kgf·cm, 61 in.·lbf)

(b) Disconnect the ECM connectors from the ECM.

(c) Remove the ECM outlet duct.

(d) Remove the air cleaner case assembly with the air hose.

(e) Remove the 3 bolts and ECM box.

Torque: 6.9 N·m (70 kgf·cm, 61 in.·lbf)

(f) Disconnect the wire harness, and remove the 2 nuts, bolt and battery carrier.

Torque:
Bolt: 18 N·m (185 kgf·cm, 13 ft·lbf)
Nut: 12 N·m (120 kgf-cm, 9 ft-lbf)

6. DISCONNECT CONTROL CABLE

(a) Remove the 2 clips and washers.

(b) Remove the 2 clips and disconnect the control cables from the transaxle.

MX

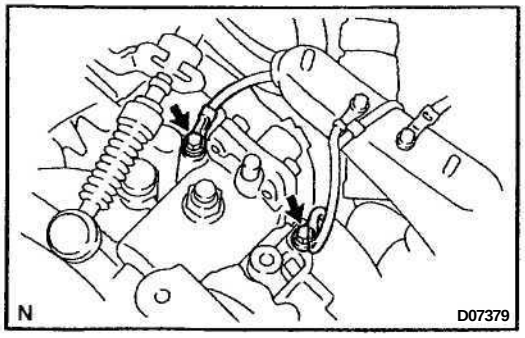

7. DISCONNECT GROUND CABLE

Remove the 2 set bolts of the 2 ground cables from the transaxle.

8. DISCONNECT SPEED SENSOR AND BACK-UP LIGHT SWITCH CONNECTORS

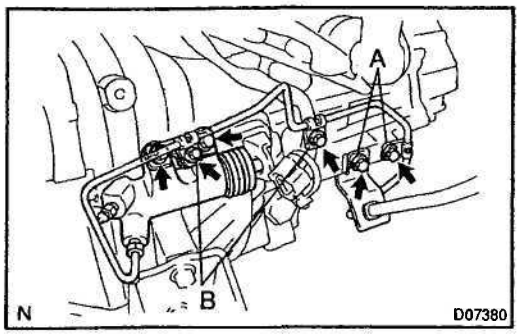

9. **DISCONNECT CLUTCH RELEASE CYLINDER**

(a) Remove the 4 set bolts of the clutch line.
Torque:
Bolt A: 12 N·m (120 kgf·cm, 9 ft·lbf)
Bolt B: 4.9 N·m (50 kgf·cm, 43 in.·lbf)

(b) Remove the 2 set bolts of the clutch release cylinder and clutch line bracket.
Torque: 12 N·m (120 kgf·cm, 9 ft·lbf)

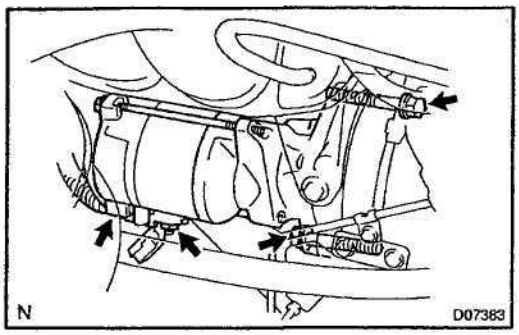

10. REMOVE STARTER

(a) Disconnect the starter connector.
(b) Remove the nut and disconnect the starter wire.
(c) Remove the 2 bolts and starter.
Torque: 37 N·m (378 kgf·cm, 28 ft·lbf)

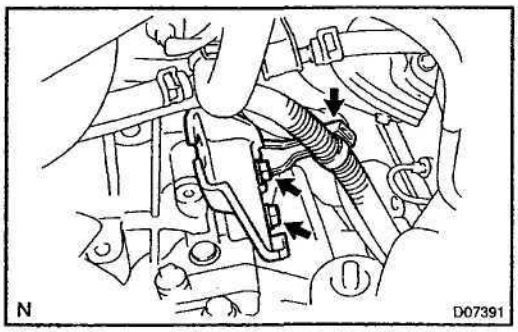

11. REMOVE CONTROL CABLE BRACKET

(a) Disconnect the wire harness from the clamp.
(b) Remove the 2 bolts, clamp and control cable bracket from the transaxle.
Torque: 25 N·m (250 kgf·cm, 18 ft·lbf)

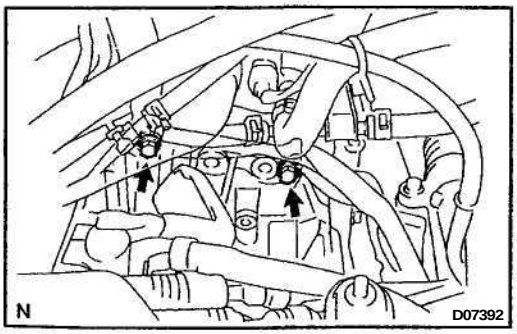

12. REMOVE 2 TRANSAXLE UPPER SIDE MOUNTING BOLTS
Torque: 64 N·m (650 kgf·cm, 47 ft·lbf)

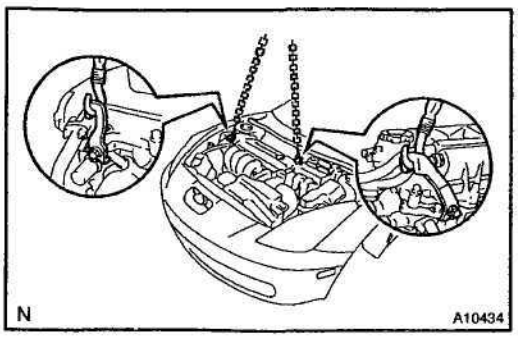

13. ATTACH ENGINE SLING DEVICE TO ENGINE HANGER

(a) Disconnect the 2 PCV hoses.
(b) Install the No. 1 and No. 2 engine hangers in the correct direction.
Parts No.:
No. 1 engine hanger: 12281–88600
No. 2 engine hanger: 12282–88600
Bolt: 91512–61020
Torque: 38 N·m (387 kgf·cm, 28 ft·lbf)

(c) Attach the engine chain hoist to the engine hangers.

CAUTION:

Do not attempt to hang the engine by hooking the chain to any other part.

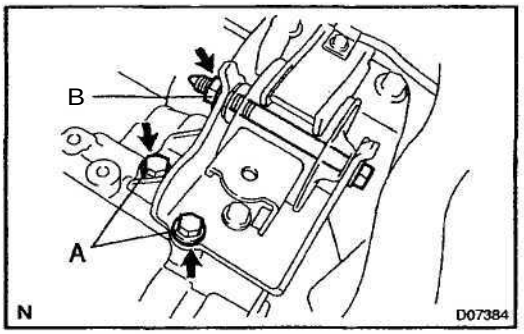

14. REMOVE ENGINE LEFT MOUNTING BRACKET 3 SET BOLTS AND NUT

Torque:

Bolt A: 60 N·m (610 kgf·cm, 44 ft·lbf)

Nut B: 80 N·m (820 kgf-cm, 59 ft·lbf)

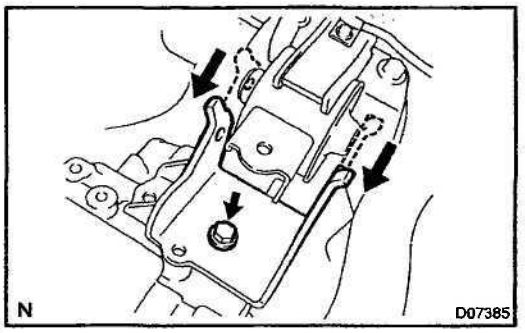

15. REMOVE ENGINE LEFT MOUNTING BRACKET

Lower the transaxle side, and remove the bolt and engine left mounting bracket.

Torque: 60 N·m (610 kgf·cm, 44 ft·lbf)

16. RAISE VEHICLE

CAUTION:

Make sure that the vehicle is securely supported.

17. REMOVE CENTER, LH AND RH ENGINE UNDER COVERS

MX

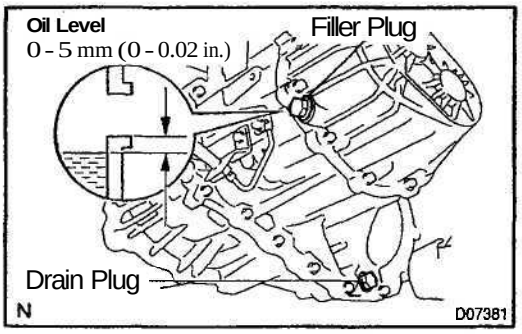

18. DRAIN TRANSAXLE OIL

Oil grade: API GL–4 or GL–5

Viscosity: SAE 75W-90

Capacity: 2.3 liters (2.4 US qts, 2.0 Imp. qts)

Torque: 39 N·m (400 kgf cm, 29 ft·lbf)

19. REMOVE LH AND RH FRONT DRIVE SHAFTS

(See page SA–18)

20. REMOVE FRONT EXHAUST PIPE

(a) Disconnect the 2 heated oxygen sensors.

Torque: 44 N·m (450 kgf-cm, 33 ft lbf)

HINT:

At the time of installation, please refer to the following items.

- Before installing the heated oxygen sensor, twist the sensor wire counterclockwise 3 and 1/2 turns.
- After installing the heated oxygen sensor, check that the sensor wire is not twisted. If it is twisted, remove the heated oxygen sensor and reinstall it.

(b) Remove the 4 bolts, compression springs and 2 gaskets.

Torque: 43 N·m (440 kgf·cm, 32 ft·lbf)

(c) Disconnect the front exhaust pipe from the pipe supports and remove it.

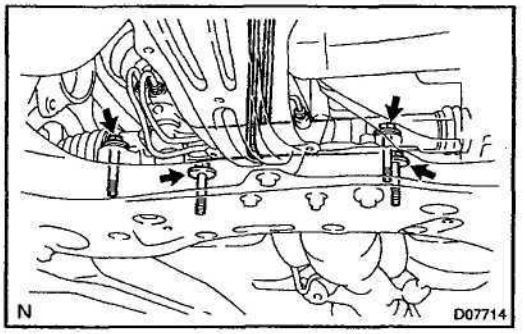

21. REMOVE FRONT SUB-FRAME AND LOWER SUSPENSION ARM

(a) Tie the PS gear assembly to the proper position with a code or an equivalent to suspend the assembly securely.

(b) Remove the 4 set bolts of the PS gear assembly.
Torque: 45 N·m (459 kgf·cm, 33 ft·lbf)

(c) Disconnect the LH and RH stabilizer bar links from the shock absorber. (See page SA–51)

(d) Remove the front sub–frame and lower suspension arm. (See page SA–42)

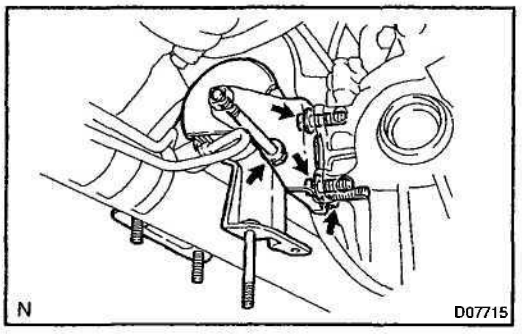

22. REMOVE ENGINE REAR MOUNTING INSULATOR AND BRACKET

(a) Remove the bolt and engine rear mounting insulator.
Torque: 87 N·m (890 kgf·cm, 64 ft·lbf)

(b) Remove the 3 bolts and engine rear mounting bracket.
Torque: 64 N·m (650 kgf·cm, 47 ft·lbf)

23. JACK UP TRANSAXLE SLIGHTLY

Using a transmission jack, support the transaxle.

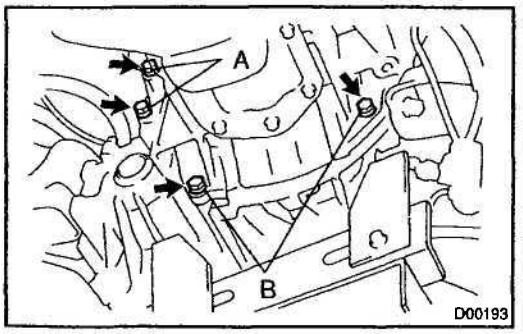

24. REMOVE 4 TRANSAXLE LOWER SIDE MOUNTING BOLTS
Torque:
Bolt A: 47 N·m (480 kgf·cm, 35 ft·lbf)
Bolt B: 23 N m (230 kgf·cm, 17 ft·lbf)

25. REMOVE TRANSAXLE

Lower the engine left side and remove the transaxle from the engine.

HINT:

At the time of installation, please refer to the following items.

- Align the input shaft with the clutch disc and install the transaxle to the engine.
- Temporarily tighten the transaxle mounting bolts.

MX

INSTALLATION

Installation is in the reverse order of removal. (See page MX–4)

HINT:

After installation, check and inspect items as follows.

- Front wheel alignment. (See page SA–4)
- Do the road test.

MANUAL TRANSAXLE ASSEMBLY

COMPONENTS

MX01F-02

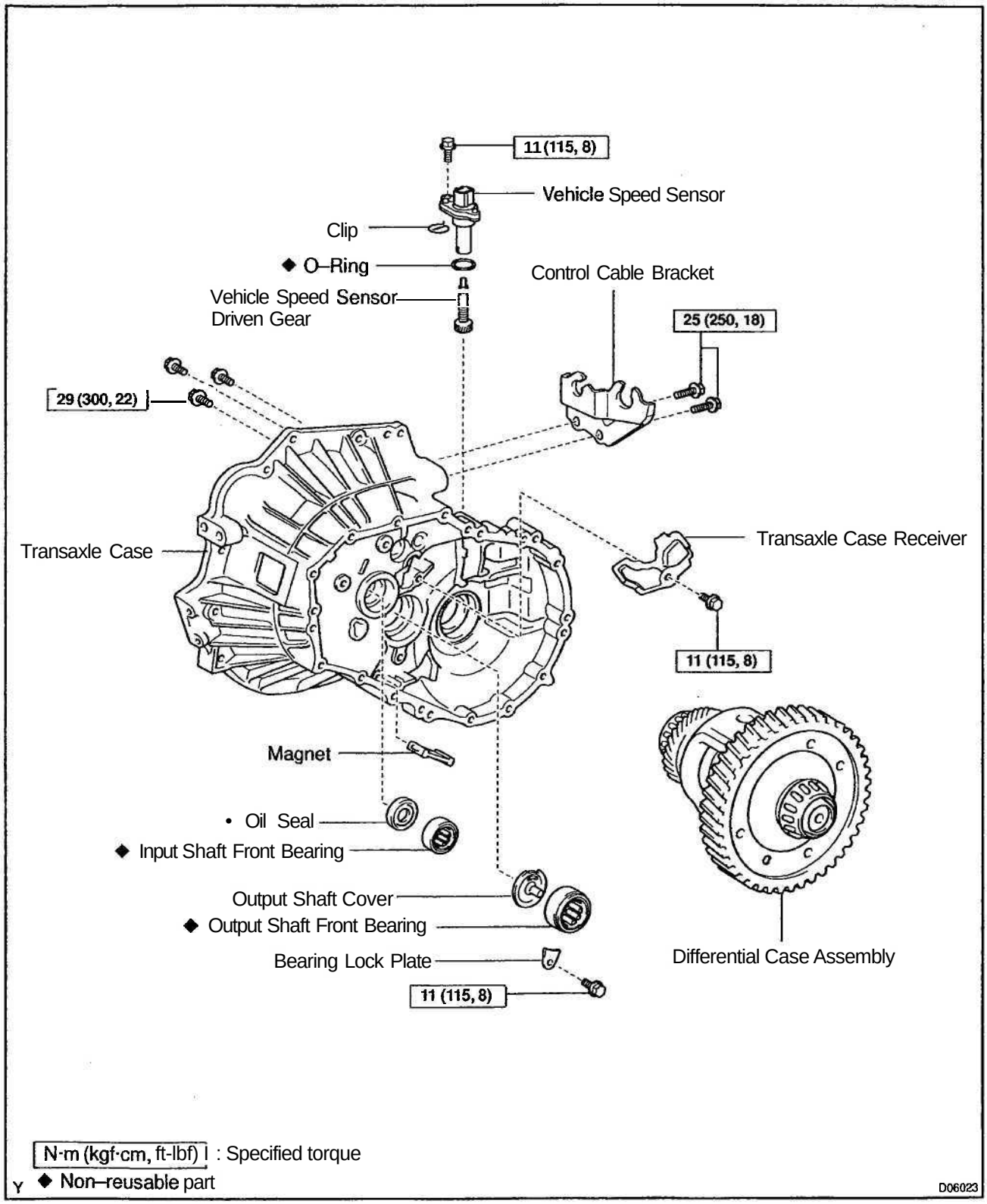

MX

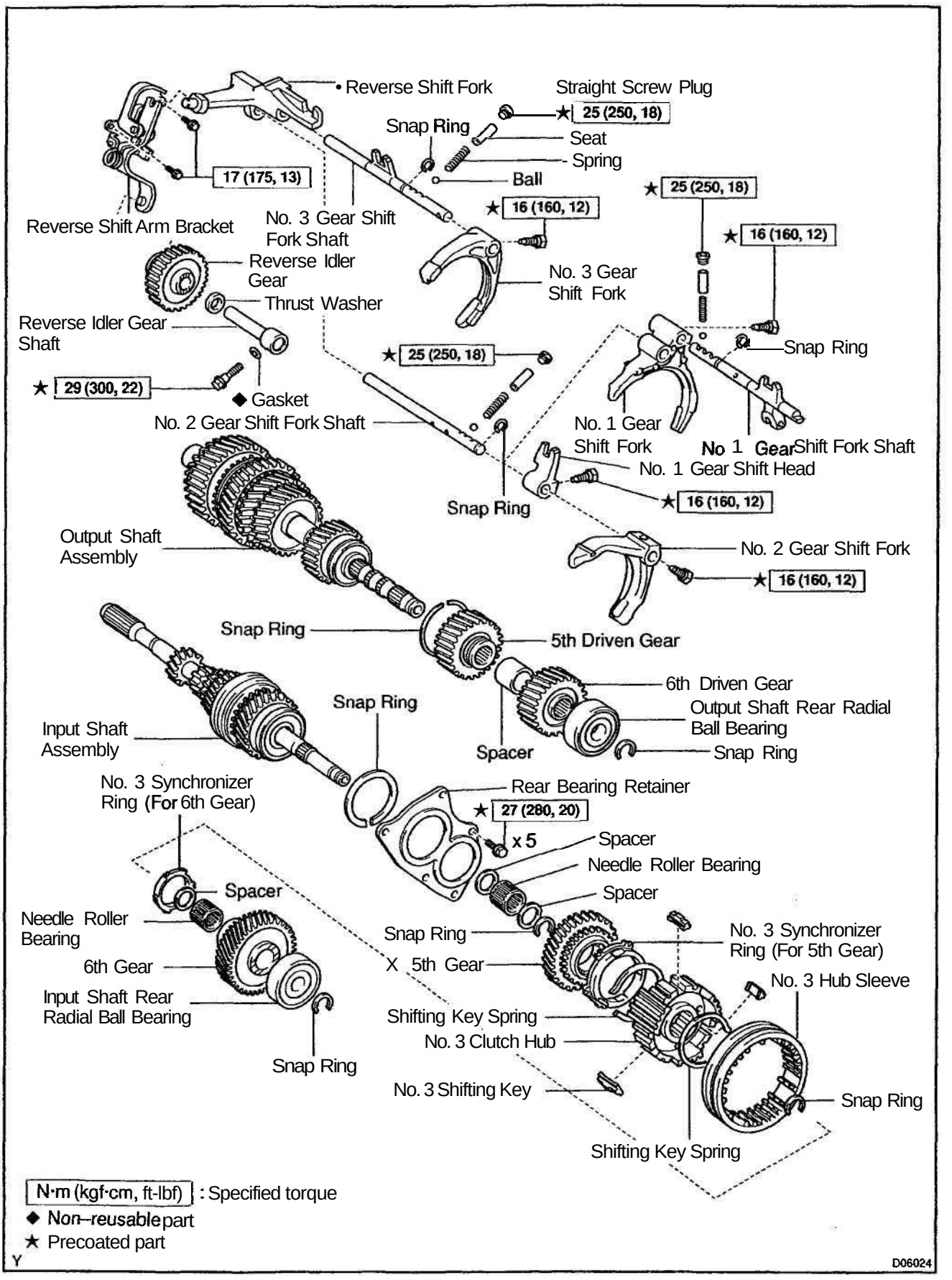
• Reverse Shift Fork
Straight Screw Plug
★ 25 (250, 18)
Snap Ring
Seat
Spring
Ball
17 (175, 13)
★ 25 (250, 18)
★ 16 (160, 12)
★ 16 (160, 12)
Reverse Shift Arm Bracket
No. 3 Gear Shift Fork Shaft
Reverse Idler Gear
No. 3 Gear Shift Fork
Thrust Washer
Reverse Idler Gear Shaft
★ 25 (250, 18)
Snap Ring
★ 29 (300, 22)
◆ Gasket
No. 2 Gear Shift Fork Shaft
No. 1 Gear Shift Fork
No 1 Gear Shift Fork Shaft
No. 1 Gear Shift Head
Snap Ring
★ 16 (160, 12)
Output Shaft Assembly
No. 2 Gear Shift Fork
★ 16 (160, 12)
Snap Ring
5th Driven Gear
6th Driven Gear
Output Shaft Rear Radial Ball Bearing
Snap Ring
Input Shaft Assembly
Snap Ring
Spacer
No. 3 Synchronizer Ring (For 6th Gear)
Rear Bearing Retainer
★ 27 (280, 20)
x 5
Spacer
Needle Roller Bearing
Spacer
Spacer
Needle Roller Bearing
6th Gear
Input Shaft Rear Radial Ball Bearing
Snap Ring
Snap Ring
X 5th Gear
No. 3 Synchronizer Ring (For 5th Gear)
No. 3 Hub Sleeve
Shifting Key Spring
No. 3 Clutch Hub
No. 3 Shifting Key
Snap Ring
Shifting Key Spring
N·m (kgf·cm, ft-lbf) : Specified torque
◆ Non–reusable part
★ Precoated part
D06024

MX

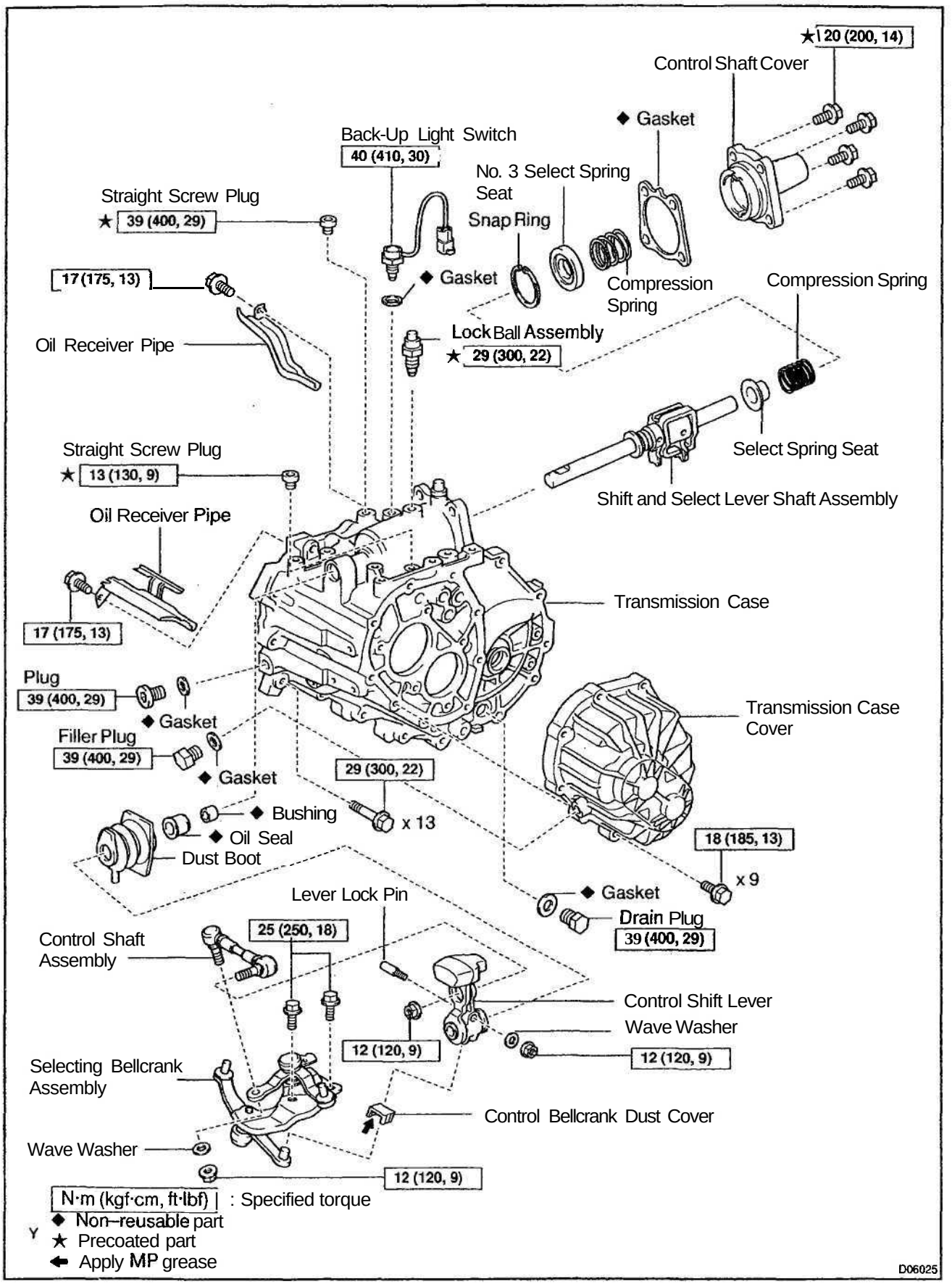
★ 20 (200, 14)
Control Shaft Cover
◆ Gasket
Back-Up Light Switch
40 (410, 30)
No. 3 Select Spring Seat
Straight Screw Plug
★ 39 (400, 29)
Snap Ring
17 (175, 13)
◆ Gasket
Compression Spring
Compression Spring
Oil Receiver Pipe
Lock Ball Assembly
★ 29 (300, 22)
Straight Screw Plug
★ 13 (130, 9)
Select Spring Seat
Shift and Select Lever Shaft Assembly
Oil Receiver Pipe
17 (175, 13)
Transmission Case
Plug
39 (400, 29)
◆ Gasket
Transmission Case Cover
Filler Plug
39 (400, 29)
◆ Gasket
29 (300, 22)
x 13
◆ Bushing
◆ Oil Seal
Dust Boot
18 (185, 13)
x 9
◆ Gasket
Drain Plug
39 (400, 29)
Lever Lock Pin
25 (250, 18)
Control Shaft Assembly
Control Shift Lever
Wave Washer
12 (120, 9)
12 (120, 9)
Selecting Bellcrank Assembly
Control Bellcrank Dust Cover
Wave Washer
12 (120, 9)
N·m (kgf·cm, ft·lbf) : Specified torque
◆ Non–reusable part
★ Precoated part
Apply MP grease
D06025

MX09Z-01

DISASSEMBLY

1. **REMOVE FILLER PLUG AND DRAIN PLUG WITH 2 GASKETS**
   Torque: 39 N·m (400 kgf-cm, 29 ft·lbf)
2. **REMOVE VEHICLE SPEED SENSOR**

(a) Remove the bolt and vehicle speed sensor.
Torque: 11 N·m (115 kgf·cm, 8 ft·lbf)

(b) Using a small screwdriver, remove the clip from the vehicle speed sensor.

(c) Remove the vehicle speed sensor driven gear from the speed sensor.

(d) Using a small screwdriver, remove the O–ring from the vehicle speed sensor.

3. **REMOVE BACK-UP LIGHT SWITCH WITH GASKET**
   Torque: 40 N·m (410 kgf·cm, 30 ft·lbf)
4. **REMOVE CONTROL CABLE BRACKET**

Remove the 2 bolts and control cable bracket.
Torque: 25 N·m (250 kgf·cm, 18 ft·lbf)

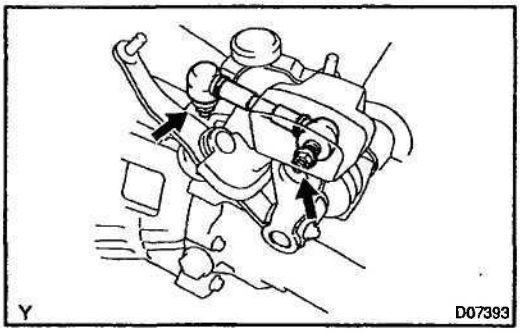

5. **REMOVE CONTROL SHAFT ASSEMBLY**

Remove the 2 nuts, wave washer and control shaft assembly.
Torque: 12 N·m (120 kgf·cm, 9 ft-lbf)

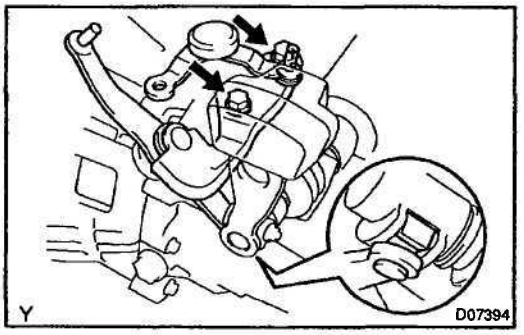

6. **REMOVE SELECTING BELLCRANK ASSEMBLY**

(a) Remove the 2 bolts and selecting bellcrank assembly.
Torque: 25 N·m (250 kgf·cm, 18 ft-lbf)

NOTICE:
At the time of reassembly, please refer to the following item.
Fit the selecting bellcrank assembly pin part with the dust cover into a groove in the control shift lever.

(b) Remove the control bellcrank dust cover from the selecting bellcrank assembly.

NOTICE:
At the time of reassembly, please refer to the following item.
Apply MP grease to the inside circumferential surface of the control bellcrank dust cover.

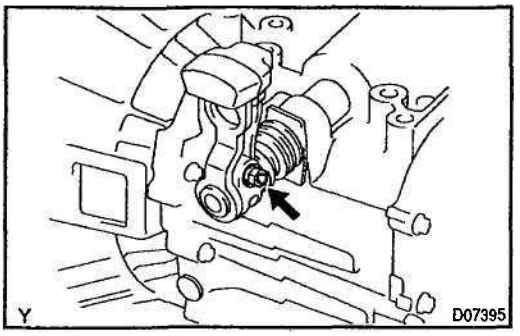

7. REMOVE CONTROL SHIFT LEVER AND DUST BOOT

(a) Remove the nut and wave washer.

Torque: 12 N·m (120 kgf·cm, 9 ft·lbf)

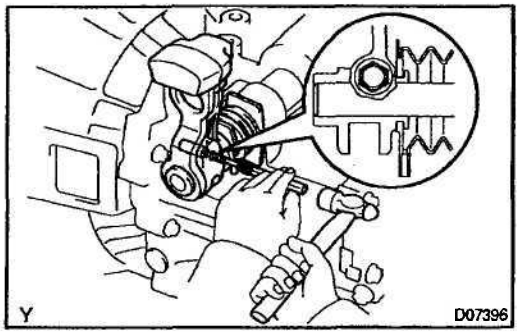

(b) Using a pin punch and hammer, drive out the lever lock pin.

NOTICE:

At the time of reassembly, please refer to the following item.

When fixing the lever lock pin, properly position the shaft groove.

(c) Remove the control shift lever and dust boot.

NOTICE:

At the time of reassembly, please refer to the following items.

- **Install the dust boot into a groove in the control shift lever.**
- **Be sure to install the dust boot in the correct direction, as shown in the illustration.**

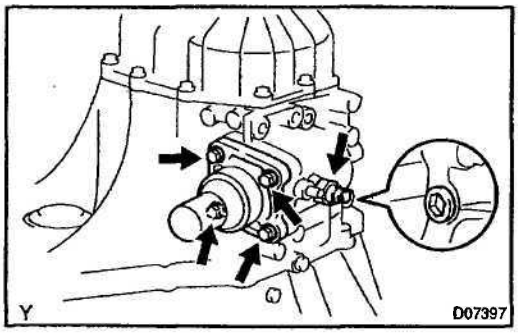

8. REMOVE PLUG, LOCK BALL ASSEMBLY AND CONTROL SHAFT COVER ASSEMBLY

(a) Using a hexagon wrench, remove the plug and gasket.

Torque: 39 N·m (400 kgf·cm, 29 ft·lbf)

(b) Remove the lock ball assembly.

Sealant:

Part No. 08833–00080, THREE BOND 1344, LOCTITE 242 or equivalent

Torque: 29 N·m (300 kgf·cm, 22 ft·lbf)

(c) Remove the 4 bolts and control shaft cover assembly with the gasket.

Sealant:

Part No. 08833–00080, THREE BOND 1344, LOCTITE 242 or equivalent

Torque: 20 N·m (200 kgf-cm, 14 ft·lbf)

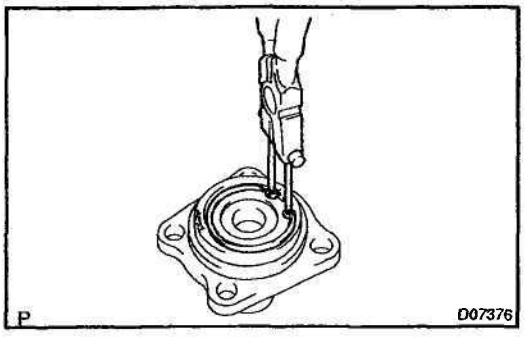

9. DISASSEMBLE CONTROL SHAFT COVER ASSEMBLY

(a) Using snap ring pliers, remove the snap ring.

(b) Remove the No. 3 select spring seat and compression spring.

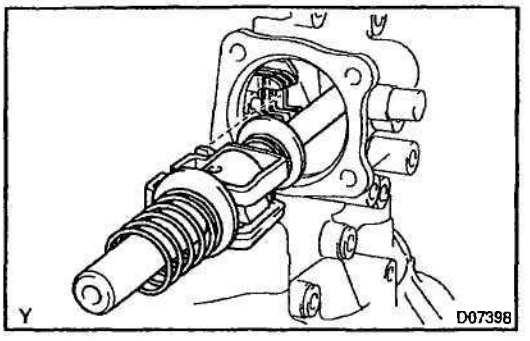

10. REMOVE SHIFT AND SELECT LEVER SHAFT ASSEMBLY

(a) Remove the shift and select lever shaft assembly.

NOTICE:

At the time of reassembly, please refer to the following item.

Set the claws of the shift interlock plate into the shift head part of the gear shift fork shaft securely.

(b) Remove the select spring seat and compression spring from the shift and select lever shaft assembly.

11. REMOVE TRANSMISSION CASE COVER

(a) Remove the 9 bolts.

Torque: 18 N·m (185 kgf·cm, 13 tt-lbf)

(b) Carefully tap the projection of the transmission case cover with a brass bar and hammer and remove it.

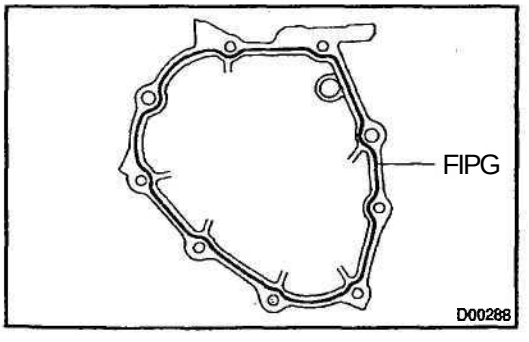

HINT:

At the time of reassembly, please refer to the following item.

Apply FIPG to the transmission case side, as shown in the illustration.

FIPG:

Part No. 08826–00090, THREE BOND 1281 or equivalent

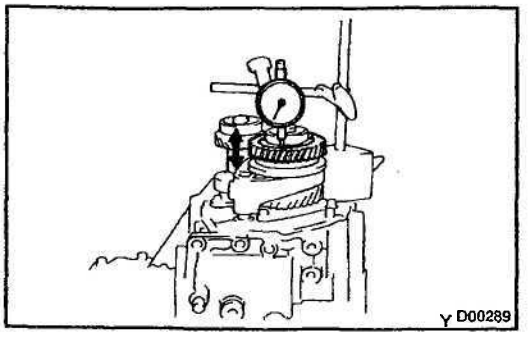

12. INSPECT 6TH GEAR THRUST CLEARANCE

Using a dial indicator, measure the thrust clearance.

Standard clearance:

0.10 - 0.60 mm (0.0039 - 0.0236 in.)

Maximum clearance:

0.60 mm (0.0236 in.)

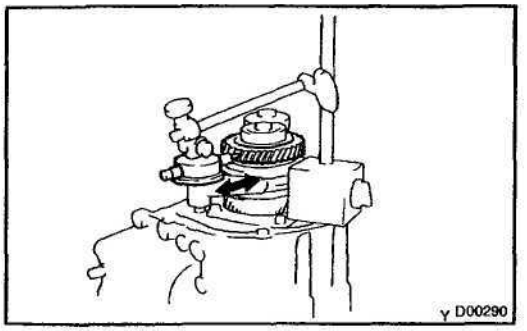

13. INSPECT 6TH GEAR RADIAL CLEARANCE

Using a dial indicator, measure the radial clearance.

Standard clearance:
0.009 - 0.050 mm (0.0003 - 0.0020 in.)
Maximum clearance:
0.050 mm (0.0020 in.)

If the clearance exceeds the maximum, replace the gear, needle roller bearing or shaft.

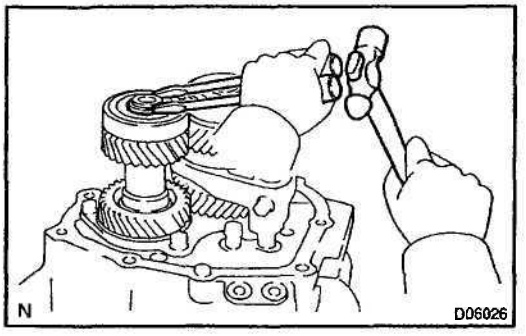

14. REMOVE OUTPUT SHAFT REAR RADIAL BALL BEARING, 6TH DRIVEN GEAR AND SPACER

(a) Using 2 screwdrivers and a hammer, tap out the snap ring.

HINT:

At the time of reassembly, please refer to the following item.

Select a snap ring from the table below that will make the thrust clearance of the output shaft rear radial ball bearing less than 0.1 mm (0.0039 in.).

Mark	Thickness mm (in.)	Mark	Thickness mm (in.)
B	2.31 (0.0909)	H	2.67 (0.1051)
C	2.37 (0.0933)	J	2.73 (0.1075)
D	2.43 (0.0957)	K	2.79 (0.1098)
E	2.49 (0.0980)	L	2.85 (0.1122)
F	2.55 (0.1004)	M	2.91 (0.1146)
G	2.61 (0.1028)	–	–

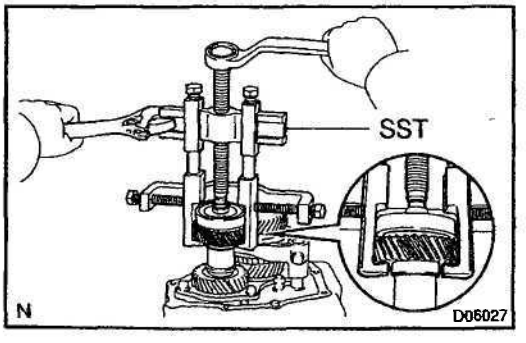

(b) Using SST, remove the rear radial ball bearing and 6th driven gear.

SST 09950-40011 (09951–04010, 09952–04010, 09953-04030, 09954-04010, 09955–04021, 09957–04010, 09958–04011)

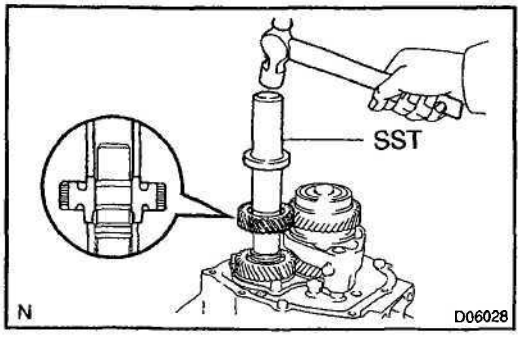

HINT:

At the time of reassembly, please refer to the following items.

- Using SST and a hammer, drive in the 6th driven gear.
  SST 09325–12010

NOTICE:

Be sure to install the 6th driven gear in the correct direction, as shown in the illustration.

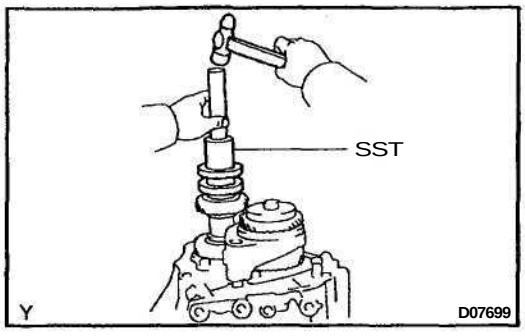

- Set SST to the rear radial ball bearing inner race securely, drive in the bearing with a hammer.
  SST 09517-12010

(c) Remove the spacer.

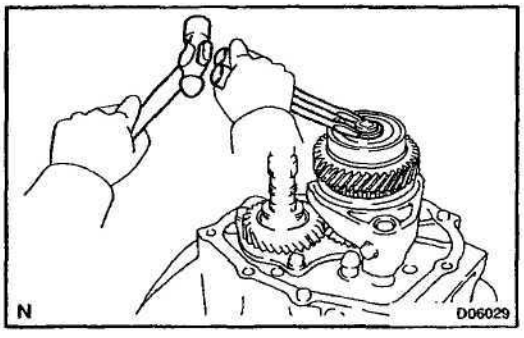

15. REMOVE INPUT SHAFT REAR RADIAL BALL BEARING AND 6TH GEAR

(a) Using 2 screwdrivers and a hammer, tap out the snap ring.

HINT:
At the time of reassembly, please refer to the following item.
Select a snap ring from the table below that will make the thrust clearance of the No. 3 clutch hub less than 0.1 mm (0.0039 in.).

Mark	Thickness mm (in.)	Mark	Thickness mm (in.)
A	1.70 (0.0669)	G	2.00 (0.0787)
B	1.75 (0.0689)	H	2.05 (0.0807)
C	1.80 (0.0709)	J	2.10 (0.0827)
D	1.85 (0.0728)	K	2.15 (0.0846)
E	1.90 (0.0748)	L	2.20 (0.0866)
F	1.95 (0.0768)	M	2.25 (0.0886)

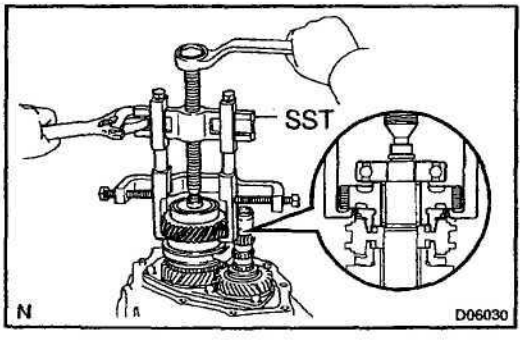

(b) Using SST, remove the rear radial ball bearing and 6th gear.
SST 09950-40011 (09951–04010, 09952–04010, 09953-04030, 09954–04010, 09955–04021, 09957–04010, 09958–04011)

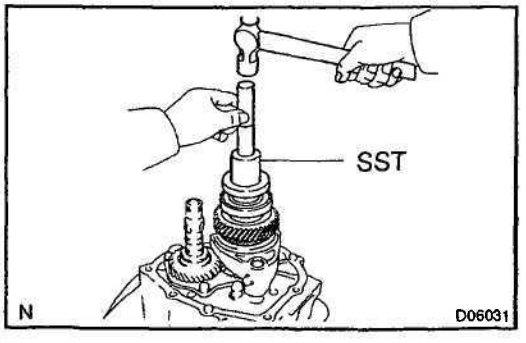

HINT:
At the time of reassembly, please refer to the following item.
Set SST to the rear radial ball bearing inner race securely, drive in the bearing with a hammer.
SST 09517-12010

(c) Remove the needle roller bearing and spacer.

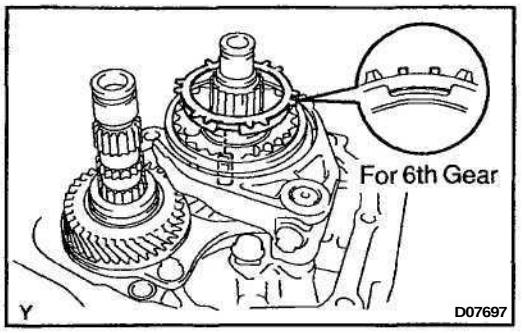

16. REMOVE NO. 3 SYNCHRONIZER RING (FOR 6TH GEAR)

NOTICE:

At the time of reassembly, please refer to the following items.

- **Align the No. 3 synchronizer ring slots with the No. 3 shifting keys.**
- **Distinguish the No. 3 synchronizer ring (for the 6th gear) by the teeth on the synchronizer ring.**

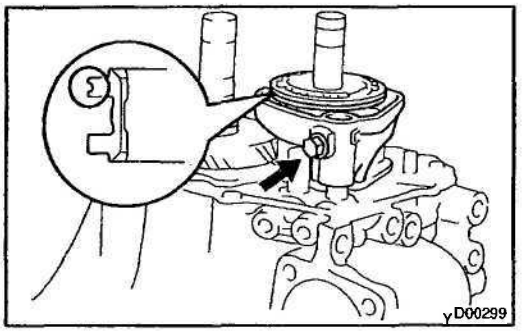

17. REMOVE NO. 3 GEAR SHIFT FORK AND NO. 3 HUB SLEEVE

Remove the bolt, No. 3 gear shift fork and No. 3 hub sleeve.

Sealant:
Part No. 08833–00080, THREE BOND 1344, LOCTITE 242 or equivalent
Torque: 16 N·m (160 kgf·cm, 12 ft·lbf)

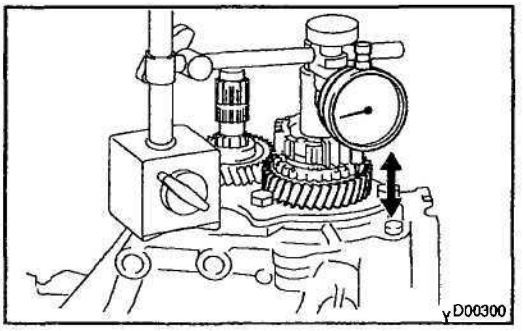

18. INSPECT 5TH GEAR THRUST CLEARANCE

Using a dial indicator, measure the thrust clearance.

Standard clearance:
0.10 - 0.62 mm (0.0039 - 0.0244 in.)
Maximum clearance:
0.62 mm (0.0244 in.)

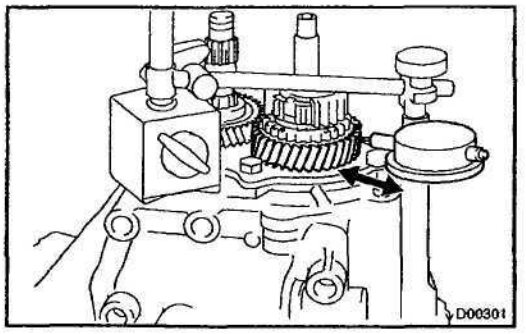

19. INSPECT 5TH GEAR RADIAL CLEARANCE

Using a dial indicator, measure the radial clearance.

Standard clearance:
0.015 - 0.056 mm (0.0006 - 0.0022 in.)
Maximum clearance:
0.056 mm (0.0022 in.)

If the clearance exceeds the maximum, replace the gear, needle roller bearing or shaft.

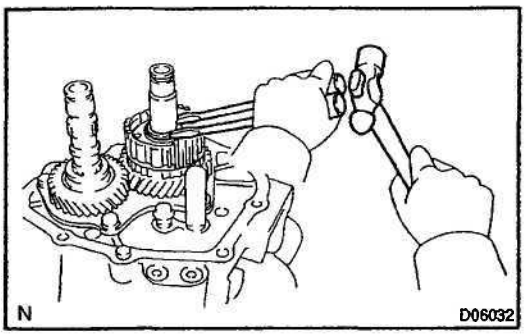

20. REMOVE 5TH GEAR, NO. 3 SYNCHRONIZER RING (FOR 5TH GEAR) AND NO. 3 CLUTCH HUB ASSEMBLY

(a) Using 2 screwdrivers and a hammer, tap out the snap ring.

HINT:

At the time of reassembly, please refer to the following item.

Select a snap ring from the table below that will make the thrust clearance of the No. 3 clutch hub less than 0.1 mm (0.0039 in.).

Mark	Thickness mm (in.)	Mark	Thickness mm (in.)
A	1.75 (0.0689)	F	2.00 (0.0787)
B	1.80 (0.0709)	G	2.05 (0.0807)
C	1 85 (0.0728)	H	2.10 (0.0827)
D	1.90 (0.0748)	J	2.15 (0.0846)
B	1.95 (0.0768)	–	–

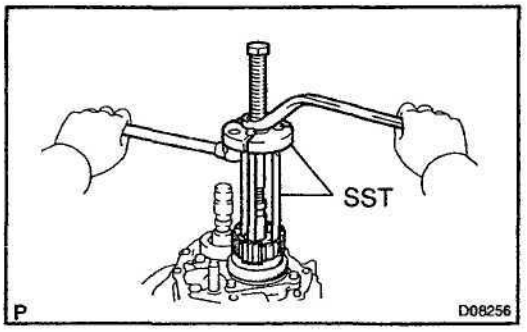

(b) Using SST, remove the No. 3 clutch hub assembly.
SST 09950-30011 (09951–03010, 09953–03010), 09950–50012 (09954–05030)

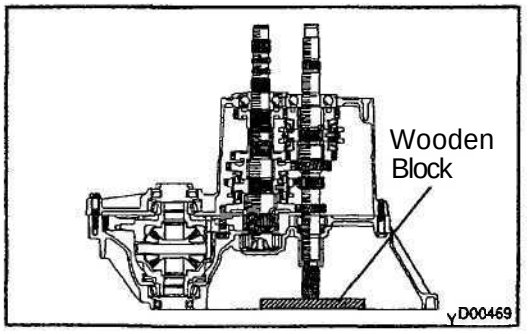

HINT:

At the time of reassembly, please refer to the following items.

- Before driving in the No. 3 clutch hub assembly and input shaft rear radial ball bearing, place the suitable sized wooden block on the rear side of the input shaft, as shown in the illustration. When driving them in, fix the input shaft firmly so that it is not pushed downward. Otherwise the input shaft center bearing is overloaded, it might be damaged.

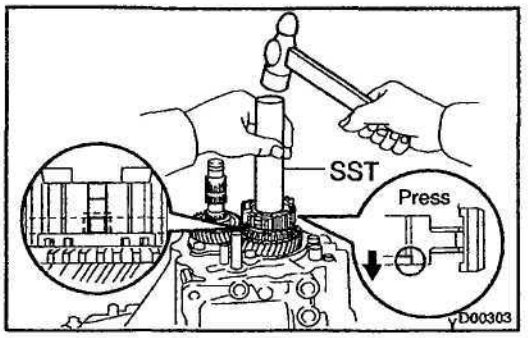

- Using SST and a hammer, drive in the No. 3 clutch hub assembly.
SST 09612-22011

NOTICE:

- **Align the No. 3 synchronizer ring slots with the No. 3 shifting keys.**
- **Be sure to install the No. 3 clutch hub assembly in the correct direction, as shown in the illustration.**

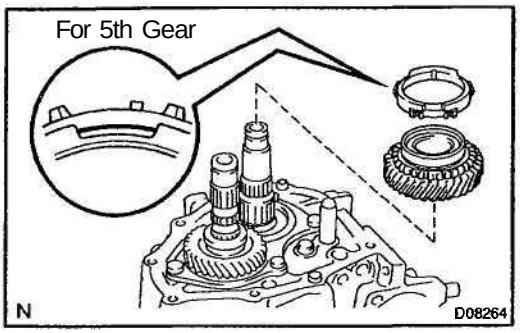

(c) Remove the No. 3 synchronizer ring (for the 5th gear) and 5th gear from the input shaft.

NOTICE:

At the time of reassembly, please refer to the following item.

Distinguish the No. 3 synchronizer ring (for the 5th gear) by the teeth on the synchronizer ring.

(d) Using 2 screwdrivers and a hammer, tap out the snap ring.

(e) Remove the needle roller bearing and 2 spacers.

21. REMOVE 5TH DRIVEN GEAR

Using SST, remove the 5th driven gear.

SST 09950-30011 (09951-03010, 09953-03010, 09954–03010, 09955–03021)

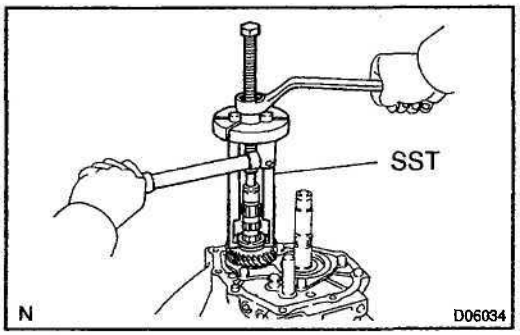

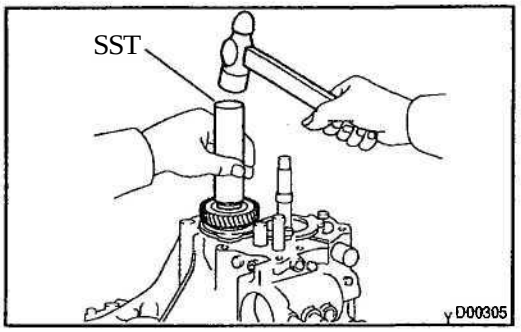

HINT:

At the time of reassembly, please refer to the following item.

Using SST and a hammer, drive in the 5th driven gear.

SST 09612-22011

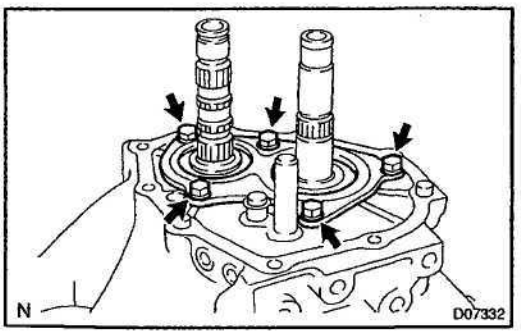

22. REMOVE REAR BEARING RETAINER

Remove the 5 bolts and rear bearing retainer.

Sealant:

Part No. 08833–00080, THREE BOND 1344, LOCTITE 242 or equivalent

Torque: 27 N·m (280 kgf·cm, 20 ft·lbf)

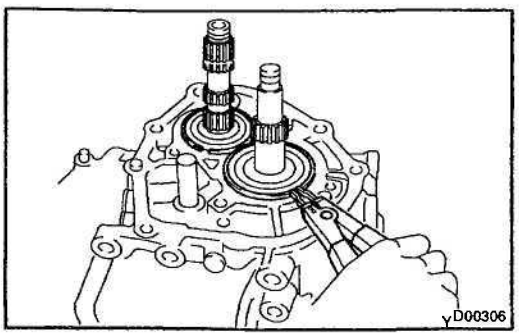

23. REMOVE BEARING SNAP RING

Using a snap ring expander, remove the 2 snap rings.

HINT:

If it is difficult to remove and install the snap rings, pull up the shafts.

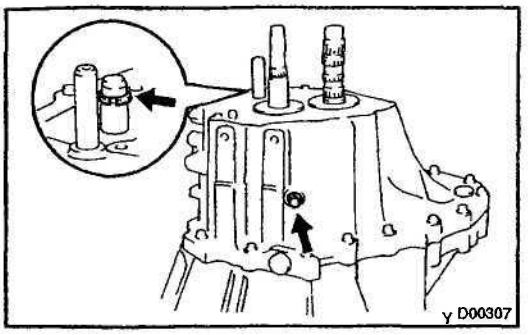

24. REMOVE REVERSE IDLER GEAR SHAFT LOCK BOLT AND GASKET

Sealant:
Part No. 08833–00080, THREE BOND 1344, LOCTITE 242 or equivalent
Torque: 29 N·m (300 kgf·cm, 22 ft·lbf)

25. REMOVE SNAP RING FROM NO. 2 SHIFT FORK SHAFT

Using 2 screwdrivers and a hammer, tap out the snap ring.

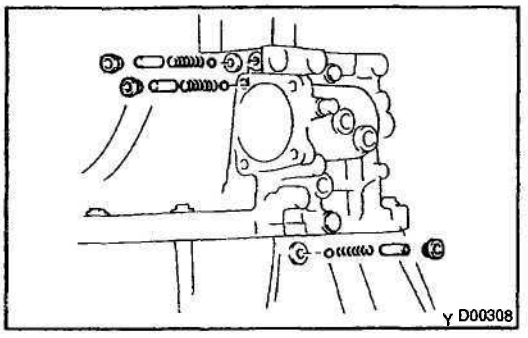

26. REMOVE STRAIGHT SCREW PLUG, SEAT, SPRING AND BALL

(a) Using a hexagon wrench, remove the 3 straight screw plugs.
Sealant:
Part No. 08833–00080, THREE BOND 1344, LOCTITE 242 or equivalent
Torque: 25 N·m (250 kgf·cm, 18 ft·lbf)

(b) Using a magnetic finger, remove the 3 seats, springs and balls.

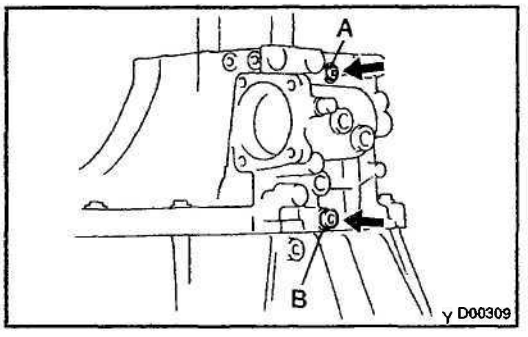

27. REMOVE STRAIGHT SCREW PLUG

Using a hexagon wrench, remove the 2 straight screw plugs.
Sealant:
Part No. 08833–00080, THREE BOND 1344, LOCTITE 242 or equivalent
Torque:
Plug A: 13 N·m (130 kgf·cm, 9 ft·lbf)
Plug B: 39 N·m (400 kgf·cm, 29 ft·lbf)

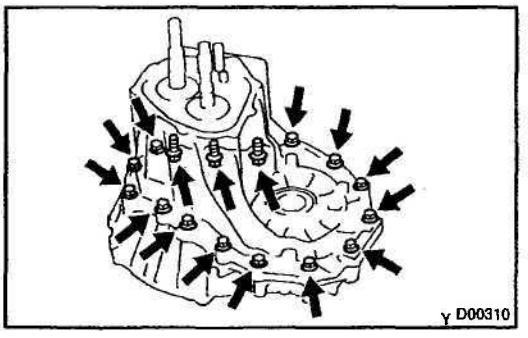

28. REMOVE TRANSMISSION CASE

(a) Remove the 16 bolts.
Torque: 29 N·m (300 kgf·cm, 22 ft·lbf)

(b) Carefully tap the transmission case with a plastic hammer and remove it.

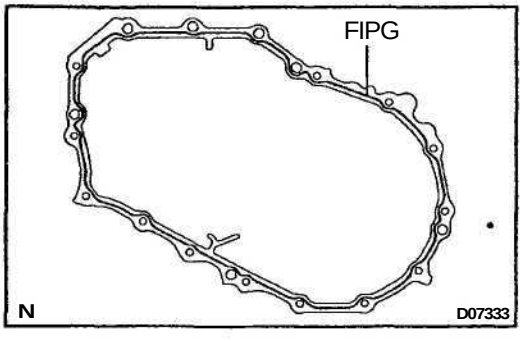

HINT:
At the time of reassembly, please refer to the following item.
Apply FIPG to the transaxle case side, as shown in the illustration.

FIPG:
Part No. 08826–00090, THREE BOND 1281 or equivalent

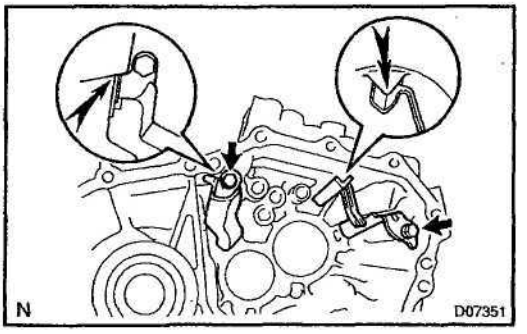

29. REMOVE OIL RECEIVER PIPE

Remove the 2 bolts and oil receiver pipes from the transmission case.

Torque: 17 N·m (175 kgf·cm, 13 ft·lbf)

NOTICE:

At the time of reassembly, please refer to the following items.

- Prevent the oil receiver pipes from being deformed.
- Install the oil receiver pipes while placing it against the transmission case, as shown in the illustration.

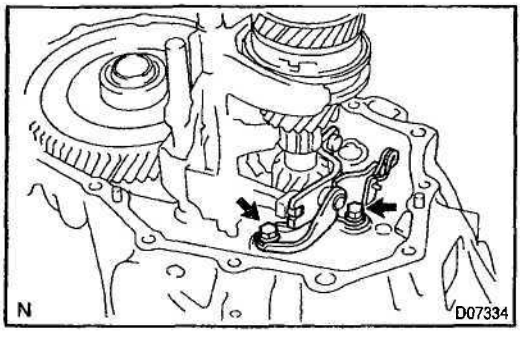

30. REMOVE REVERSE SHIFT ARM BRACKET

Remove the 2 bolts and reverse shift arm bracket.

Torque: 17 **N·m** (175 **kgf·cm,** 13 **ft·lbf)**

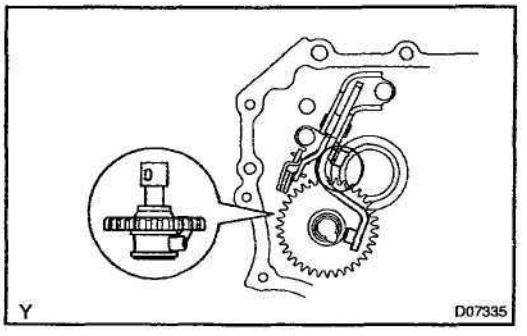

NOTICE:

At the time of reassembly, please refer to the following items.

- Set the pin on the top of the reverse shift arm into a groove on the reverse idler gear.
- Fit the claw of the reverse shift arm bracket with the notch of the input shaft front bearing.

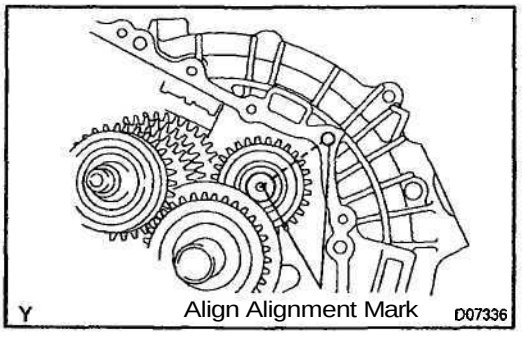

31. REMOVE REVERSE IDLER GEAR, THRUST WASHER AND SHAFT

NOTICE:

At the time of reassembly, please refer to the following item.

Install the reverse idler gear, thrust washer and shaft, as shown in the illustration.

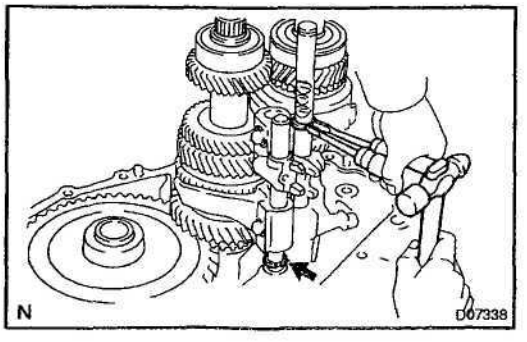

32. REMOVE GEAR SHIFT FORK SHAFT SNAP RING

Using 2 screwdrivers and a hammer, tap out the 2 snap rings from the No. 1 and No. 3 gear shift fork shafts.

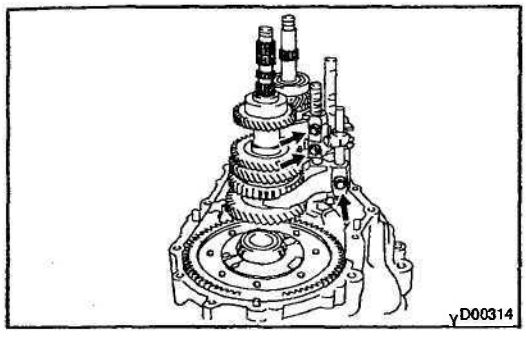

33. REMOVE NO. 1 GEAR SHIFT HEAD, NO. 1 AND NO. 2 GEAR SHIFT FORKS 3 SET BOLTS
Sealant:
Part No. 08833–00080, THREE BOND 1344, LOCTITE 242 or equivalent
Torque: 16 N·m (160 kgf·cm, 12 ft·lbf)

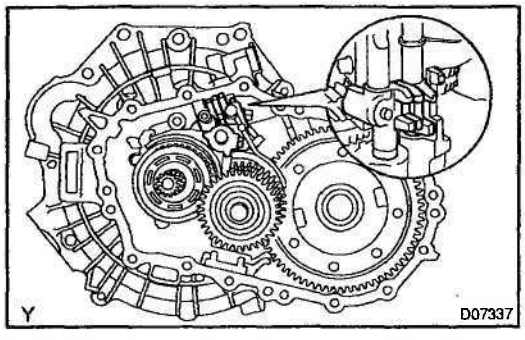

NOTICE:
At the time of reassembly, please refer to the following item.
Make sure that the 3 gear shift heads are positioned, as shown in the illustration.

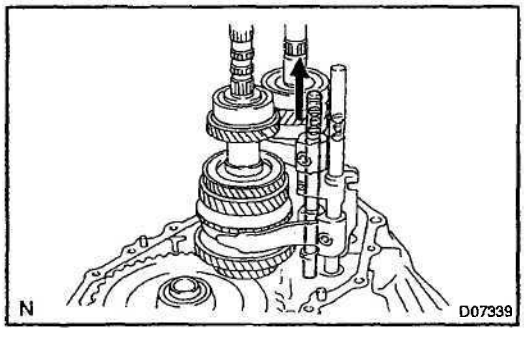

34. REMOVE NO. 2 GEAR SHIFT FORK SHAFT
Remove the No. 2 gear shift fork shaft from the No. 2 gear shift fork, No. 1 gear shift head, No. 1 gear shift fork, reverse shift fork and transaxle case.

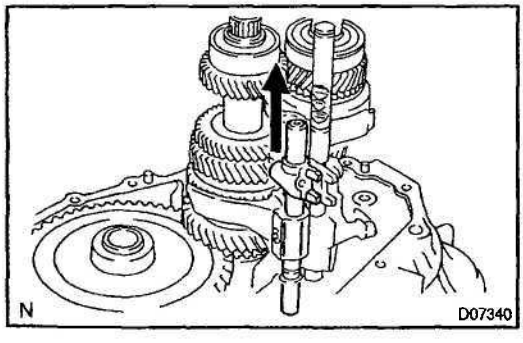

35. REMOVE NO. 1 GEAR SHIFT FORK SHAFT
Remove the No. 1 gear shift fork shaft from the No. 1 gear shift fork and transaxle case.

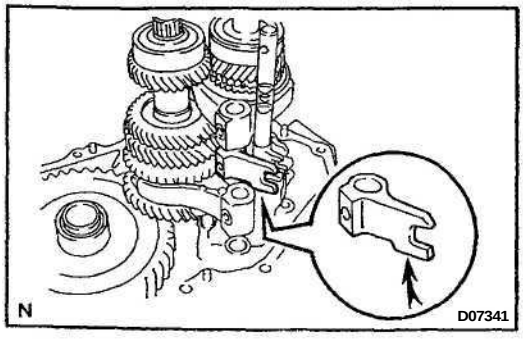

36. REMOVE NO. 1 GEAR SHIFT HEAD

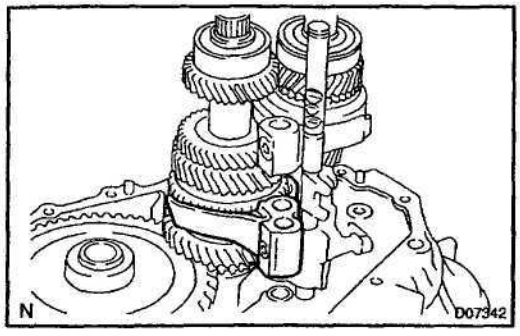

37. REMOVE NO. 1 GEAR SHIFT FORK FROM REVERSE GEAR GROOVE

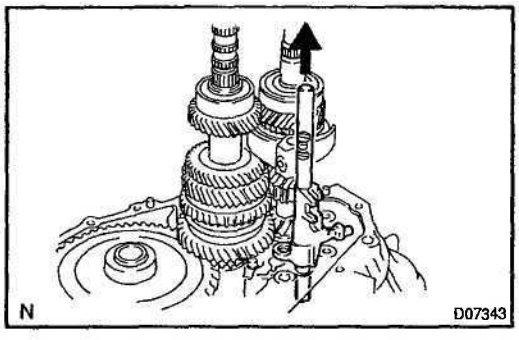

38. REMOVE NO. 3 GEAR SHIFT FORK SHAFT AND REVERSE SHIFT FORK

(a) Remove the No. 3 gear shift fork shaft from the reverse shift fork and transaxle case.

(b) Remove the reverse shift fork.

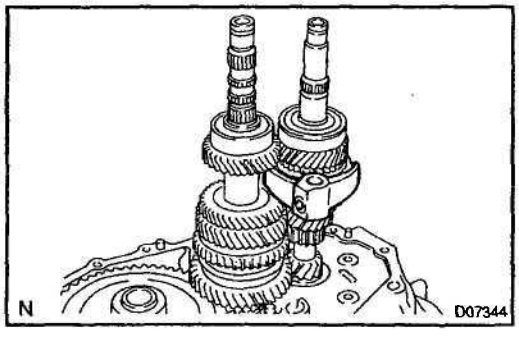

39. REMOVE NO. 2 GEAR SHIFT FORK FROM NO. 2 HUB SLEEVE GROOVE

40. REMOVE INPUT AND OUTPUT SHAFTS TOGETHER FROM TRANSAXLE CASE

41. REMOVE DIFFERENTIAL CASE ASSEMBLY

NOTICE:

At the time of reassembly, please refer to the following item.

Before reassembly, inspect the differential tapered roller bearing preload. (See page MX–52)

42. REMOVE MAGNET FROM TRANSAXLE CASE

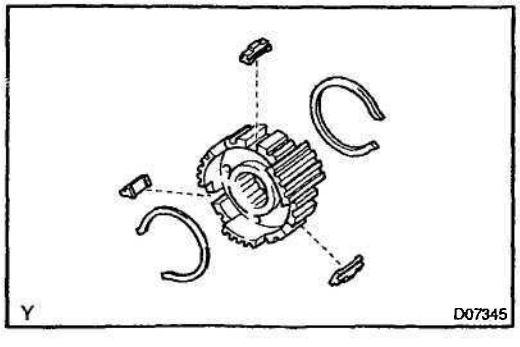

43. DISASSEMBLE NO. 3 CLUTCH HUB ASSEMBLY

(a) Using a screwdriver, remove the 2 shifting key springs.

NOTICE:

At the time of reassembly, please refer to the following item.

Position the shifting key springs so that their end gaps are not aligned.

(b) Remove the 3 No. 3 shifting keys from the No. 3 clutch hub.

MXDAC-01

INSPECTION

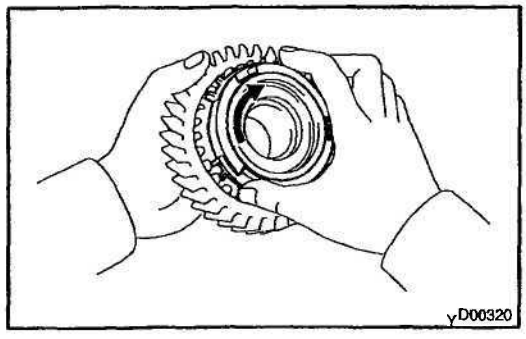

1. INSPECT 5TH AND 6TH GEARS SYNCHRONIZER RING

(a) Check for wear or damage.

(b) Check the braking effect of the synchronizer ring. Turn the synchronizer ring in one direction while pushing it to the gear cone. Check that the ring locks.

If the braking effect is insufficient, apply a small amount of the fine lapping compound between the synchronizer ring and gear cone. Lightly rub the synchronizer ring and gear cone together.

NOTICE:

Ensure the fine lapping compound is completely washed off after rubbing.

(c) Check again the braking effect of the synchronizer ring.

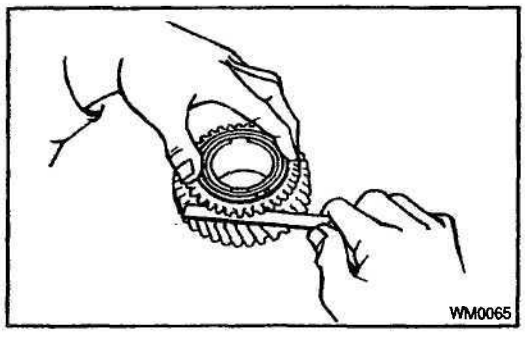

(d) Using a feeler gauge, measure the clearance between the synchronizer ring back and gear spline end.

Minimum clearance: 0.75 mm (0.0295 in.)

If the clearance is less than the minimum, replace the synchronizer ring, and apply a small amount of the fine lapping compound on gear cone.

NOTICE:

Ensure the fine lapping compound is completely washed off after rubbing.

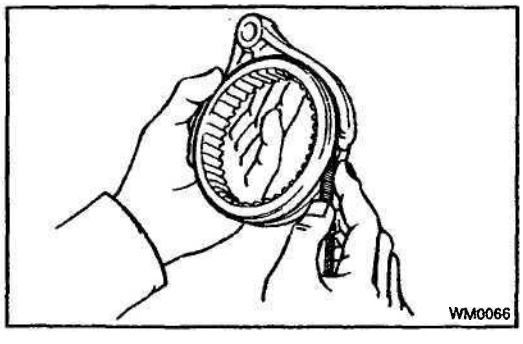

2. INSPECT GEAR SHIFT FORK AND HUB SLEEVE CLEARANCE

Using a feeler gauge, measure the clearance between the hub sleeve and gear shift fork.

Maximum clearance: 0.89 mm (0.035 in.)

If the clearance exceeds the maximum, replace the gear shift fork or hub sleeve.

3. REMOVE TRANSAXLE CASE RECEIVER

Remove the bolt and transaxle case receiver from the transaxle case.

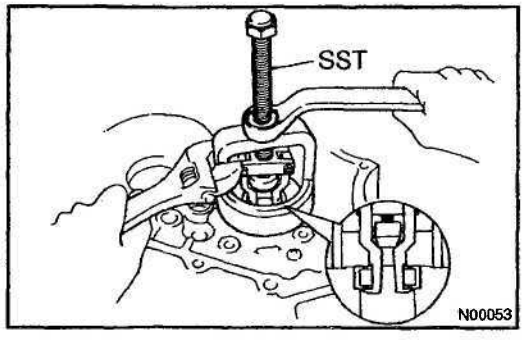

4. IF NECESSARY, REPLACE INPUT SHAFT FRONT BEARING AND OIL SEAL

(a) Using SST, remove the input shaft front bearing.

SST 09612–65014

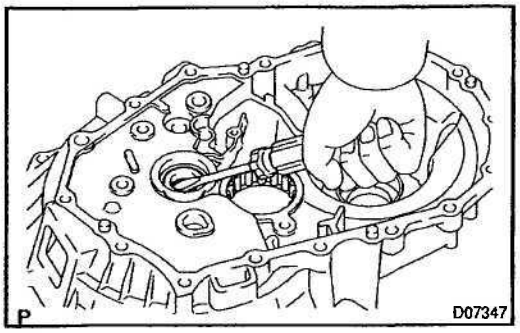

(b) Using a screwdriver, remove the oil seal.

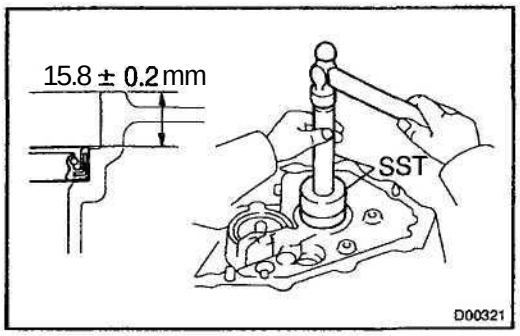

(c) Using SST and a hammer, drive in a new oil seal.
SST 09950-60010 (09951-00360), 09950-70010 (09951–07150)
Drive in depth: 15.8 ± 0.2 mm (0.622 ± 0.008 in.)

(d) Coat the lip of the oil seal with MP grease.

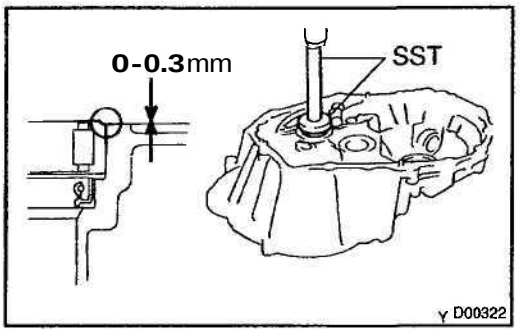

(e) Using SST and a press, install a new input shaft front bearing.
SST 09950-60010 (09951-00400), 09950–70010 (09951–07150)
Drive in depth: 0 - 0.3 mm (0 - 0.012 in.)

NOTICE:
Be sure to install a new bearing in the correct direction, as shown in the illustration.

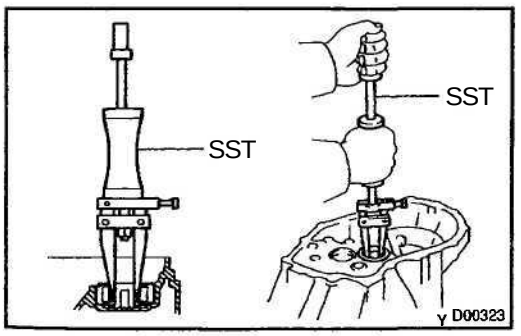

5. IF NECESSARY, REPLACE OUTPUT SHAFT FRONT BEARING AND OUTPUT SHAFT COVER

(a) Remove the bolt and bearing lock plate.

(b) Using SST, pull out the output shaft front bearing.
SST 09308–00010

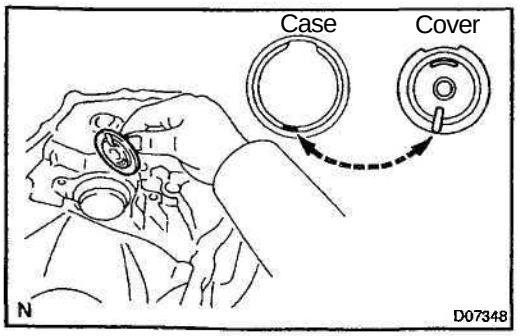

(c) Remove the output shaft cover.

(d) Install the output shaft cover.

NOTICE:
Install the output shaft cover projection into the case side hollow.

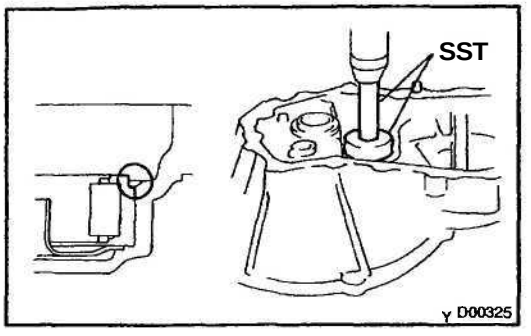

(e) Using SST and a press, install a new output shaft front bearing.
SST 09950–60010 (09951-00560), 09950-70010 (09951–07150)

NOTICE:
Be sure to install a new bearing in the correct direction, as shown in the illustration.

(f) Install the bearing lock plate with the bolt.
Torque: 11 N·m (115 kgf·cm, 8 ft·lbf)

6. INSTALL TRANSAXLE CASE RECEIVER

Install the transaxle case receiver to the transaxle case with the boh.
Torque: 11 N·m (115 kgf·cm, 8 tt-lbf)

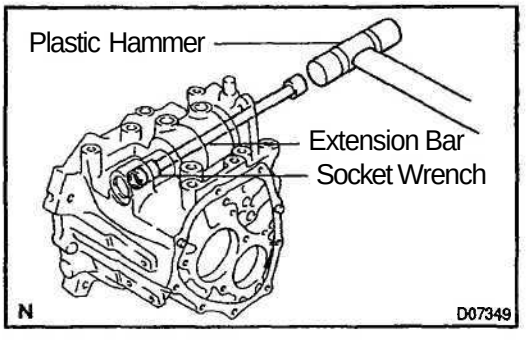

7. IF NECESSARY, REPLACE TRANSMISSION CASE BUSHING

(a) Using a socket wrench (12 mm), extension bar and plastic hammer, drive out the bushing.

NOTICE:
When driving out the bushing, be careful not to damage the transmission case by the socket wrench.

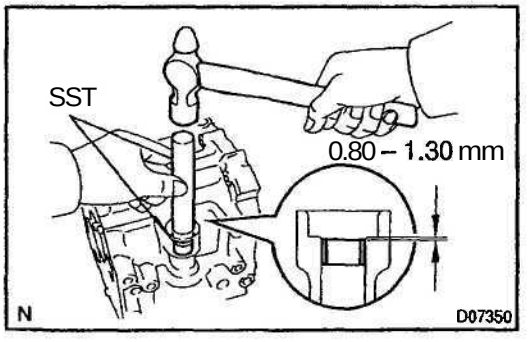

(b) Using SST and a hammer, drive in a new bushing.
SST 09950-60010 (09951–00180), 09950-70010 (09951–07100)
Drive in depth: 0.80 – 1.30 mm (0.0315 - 0.0512 in.)

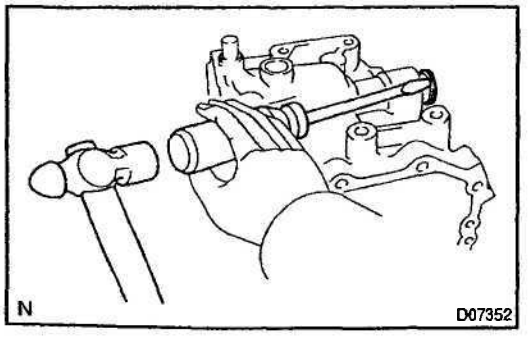

8. IF NECESSARY, REPLACE TRANSMISSION CASE OIL SEAL

(a) Using a screwdriver and hammer, drive out the oil seal.

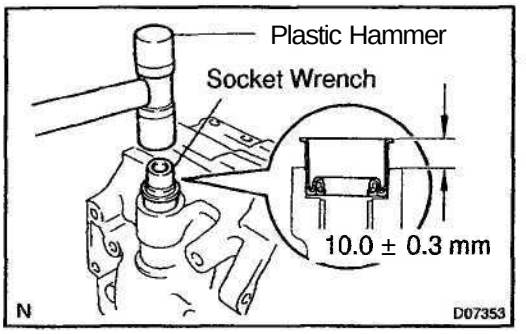

(b) Using a socket wrench (17 mm) and plastic hammer, drive in a new oil seal.

Drive in depth: 10.0 ± 0.3 mm (0.394 ± 0.012 in.)

(c) Coat the lip of the oil seal with MP grease.

REASSEMBLY

Reassembly is in the reverse order of disassembly. (See page MX–12)

NOTICE:

When working with FIPG material, you must observe the followings.

- **Using a razor blade and gasket scraper, remove all old FIPG material from the gasket surfaces.**
- **Thoroughly clean all components to remove all loose material.**
- **Clean both sealing surfaces with a non-residue solvent.**
- **Apply FIPG in an approx. 1 mm (0.04 in.) wide bead along the sealing surface.**
- **Parts must be assembled within 10 minutes of application. Otherwise, the FIPG material must** be removed and reapplied.

HINT:

Coat all of the sliding and rotating surfaces with gear oil before reassembly.

INPUT SHAFT

COMPONENTS

MX01J-02

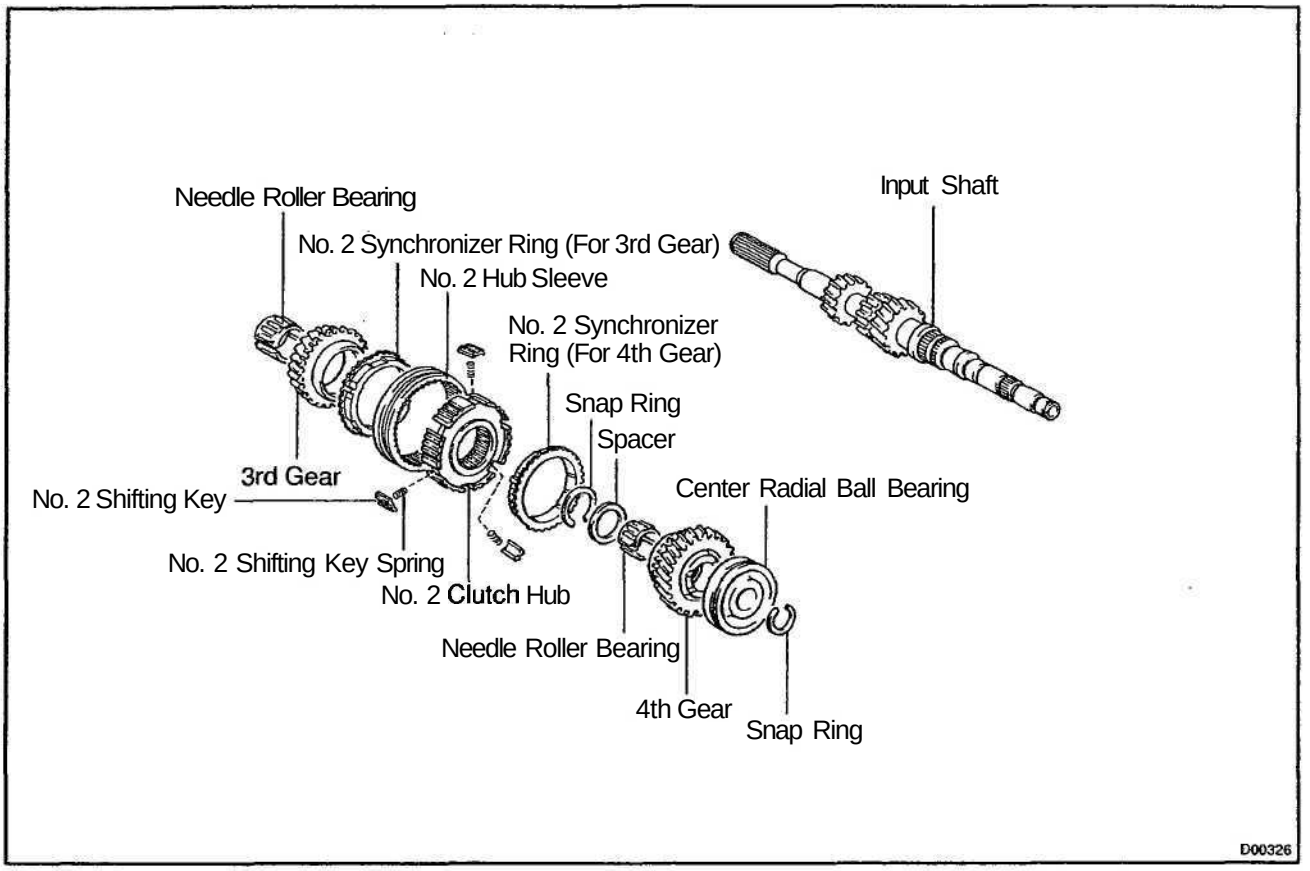

MX01K-02

DISASSEMBLY

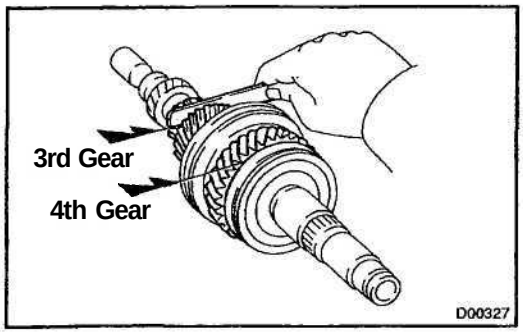

1. INSPECT 3RD AND 4TH GEARS THRUST CLEARANCE

Using a feeler gauge, measure the thrust clearance.

Standard clearance:
3rd gear: 0.10 - 0.35 mm (0.0039 - 0.0138 in.)
4th gear: 0.10 - 0.55 mm (0.0039 - 0.0217 in.)
Maximum clearance:
3rd gear: 0.35 mm (0.0138 in.)
4th gear: 0.55 mm (0.0217 in.)

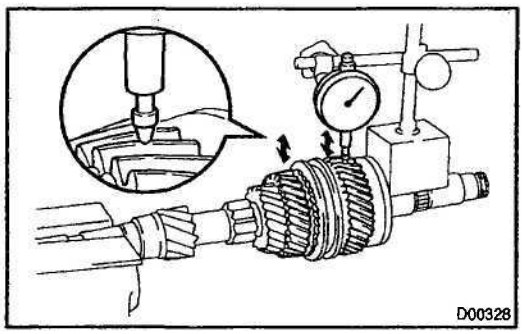

2. INSPECT 3RD AND 4TH GEARS RADIAL CLEARANCE

Using a dial indicator, measure the radial clearance between the gear and shaft.

Standard clearance:
KOYO made:
0.015 - 0.058 mm (0.0006 - 0.0023 in.)
NSK made:
0.015 - 0.056 mm (0.0006 - 0.0022 in.)
Maximum clearance:
KOYO made: 0.058 mm (0.0023 in.)
NSK made: 0.056 mm (0.0022 in.)

If the clearance exceeds the maximum, replace the gear, needle roller bearing or shaft.

3. REMOVE SNAP RING

Using 2 screwdrivers and a hammer, tap out the snap ring.

HINT:

Take care not to damage the journal surface of the input shaft.

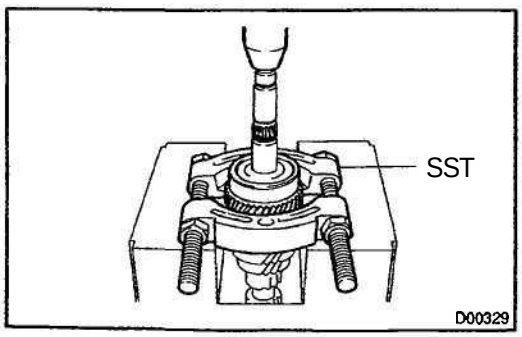

4. REMOVE CENTER RADIAL BALL BEARING, 4TH GEAR, NEEDLE ROLLER BEARING, SPACER AND NO. 2 SYNCHRONIZER RING (FOR 4TH GEAR) FROM INPUT SHAFT

(a) Using SST and a press, remove the center radial ball bearing and 4th gear.

SST 09950–00020

HINT:

Support the input shaft assembly by hand so that it will not be dropped off.

(b) Remove the needle roller bearings, spacer and No. 2 synchronizer ring (for the 4th gear).

5. REMOVE SNAP RING

Using 2 screwdrivers and a hammer, tap out the snap ring.

HINT:

Take care not to damage the journal surface of the input shaft.

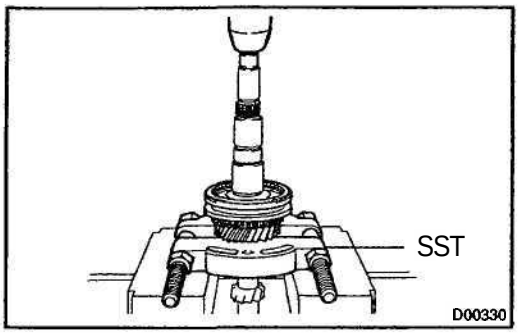

6. REMOVE NO. 2 HUB SLEEVE ASSEMBLY, 3RD GEAR, NO. 2 SYNCHRONIZER RING (FOR 3RD GEAR) AND NEEDLE ROLLER BEARING

(a) Using SST and a press, remove the No. 2 hub sleeve assembly, 3rd gear and No. 2 synchronizer ring (for the 3rd gear).

SST 09950–00020

HINT:

Support the input shaft by hand so that it will not be dropped off.

(b) Remove the needle roller bearings.

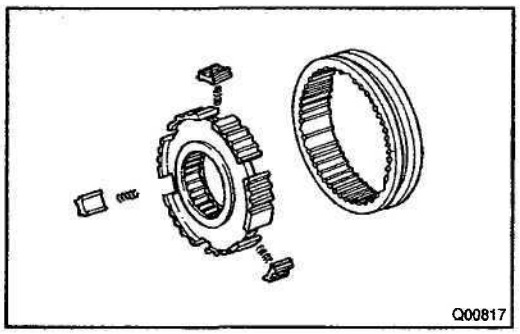

7. DISASSEMBLE NO. 2 HUB SLEEVE ASSEMBLY

(a) Remove the No. 2 hub sleeve from the No. 2 clutch hub.

(b) Remove the 3 No. 2 shifting keys and No. 2 shifting key springs from the No. 2 clutch hub.

MX01L-02

INSPECTION

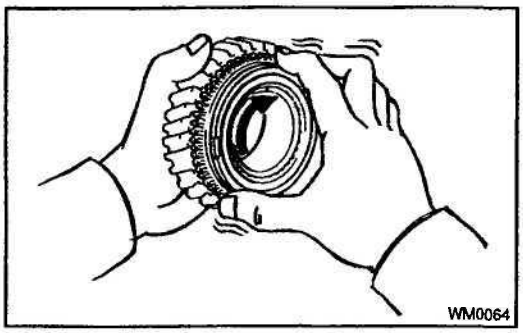

1. INSPECT SYNCHRONIZER RING

(a) Check for wear or damage.

(b) Check the braking effect of the synchronizer ring. Turn the synchronizer ring in one direction while pushing it to the gear cone. Check that the ring locks.

If the braking effect is insufficient, apply a small amount of the fine lapping compound between the synchronizer ring and gear cone. Lightly rub the synchronizer ring and gear cone together.

NOTICE:

Ensure the fine lapping compound is completely washed off after rubbing.

(c) Check again the braking effect of the synchronizer ring.

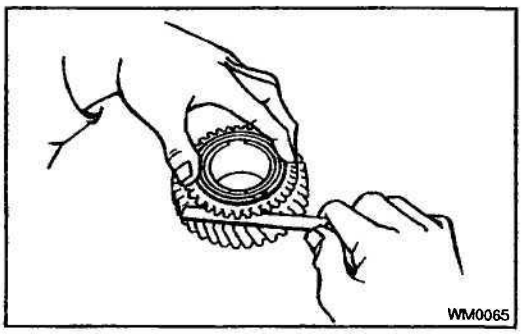

(d) Using a feeler gauge, measure the clearance between the synchronizer ring back and gear spline end.

Minimum clearance:

3rd gear: 0.65 mm (0.0256 in.)

4th gear: 0.75 mm (0.0295 in.)

If the clearance is less than the minimum, replace the synchronizer ring, and apply a small amount of the fine lapping compound on gear cone.

NOTICE:

Ensure the fine lapping compound is completely washed off after rubbing.

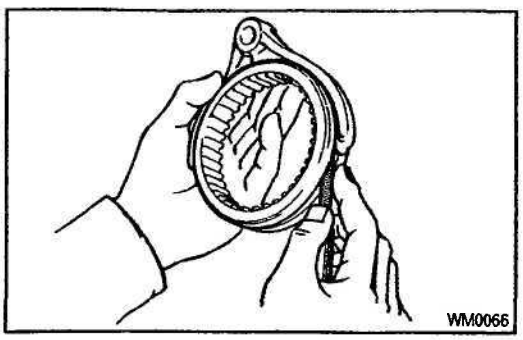

2. INSPECT GEAR SHIFT FORK AND HUB SLEEVE CLEARANCE

Using a feeler gauge, measure the clearance between the hub sleeve and gear shift fork.

Maximum clearance: 0.35 mm (0.014 in.)

If the clearance exceeds the maximum, replace the gear shift fork or hub sleeve.

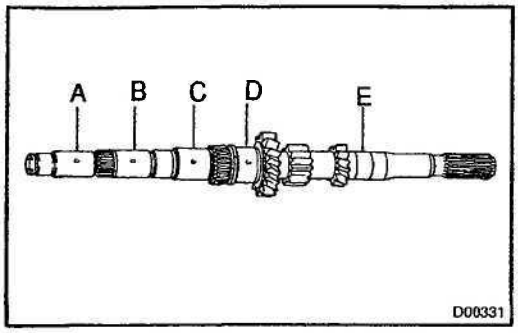

3. INSPECT INPUT SHAFT

(a) Check the input shaft for wear or damage.

(b) Using a micrometer, measure the outer diameter of the input shaft journal surface.

Minimum outer diameter:
Part A: 21.991 mm (0.8658 in.)
Part B: 24.885 mm (0.9797 in.)
Part C: 28.985 mm (1.1411 in.)
Part D: 30.985 mm (1.2199 in.)
Part E: 24.985 mm (0.9837 in.)

If the outer diameter is less than the minimum, replace the input shaft.

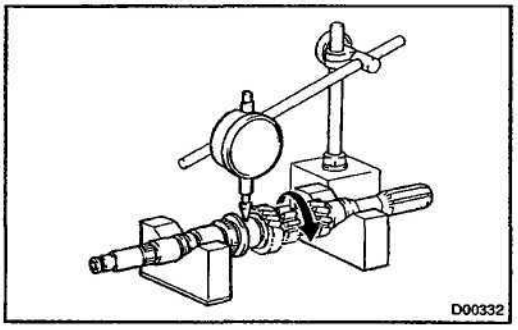

(c) Using a dial indicator, check the shaft runout.

Maximum runout: 0.03 mm (0.0012 in.)

If the runout exceeds the maximum, replace the input shaft.

MX01M-02

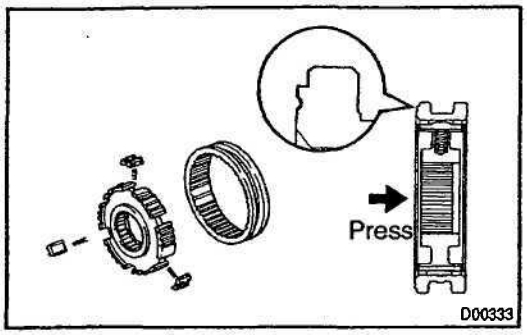

REASSEMBLY

HINT:

Coat all of the sliding and rotating surfaces with gear oil before reassembly.

1. ASSEMBLE NO. 2 HUB SLEEVE ASSEMBLY

(a) Install the 3 No. 2 shifting key springs and No. 2 shifting keys to the No. 2 clutch hub.

(b) Install the No. 2 hub sleeve to the No. 2 clutch hub.

NOTICE:

Assemble the No. 2 hub sleeve and No. 2 clutch hub in the direction shown in the illustration.

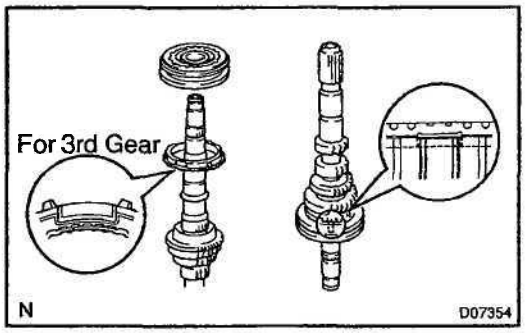

2. INSTALL NEEDLE ROLLER BEARING, 3RD GEAR, NO. 2 SYNCHRONIZER RING (FOR 3RD GEAR) AND NO. 2 HUB SLEEVE ASSEMBLY TO INPUT SHAFT

(a) Apply gear oil to the needle roller bearings and install it.

(b) Install the 3rd gear and No. 2 synchronizer ring (for the 3rd gear).

NOTICE:

Distinguish the No. 2 synchronizer ring (for the 3rd gear) by the teeth on the synchronizer ring.

(c) Install the No. 2 hub sleeve assembly so that the No. 2 synchronizer ring slots and No. 2 shifting keys are aligned.

NOTICE:

Be sure to install the No. 2 hub sleeve assembly in the correct direction, as shown in the illustration.

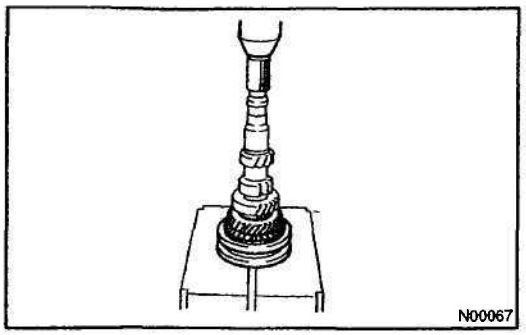

(d) Using a press, install the No. 2 hub sleeve assembly.

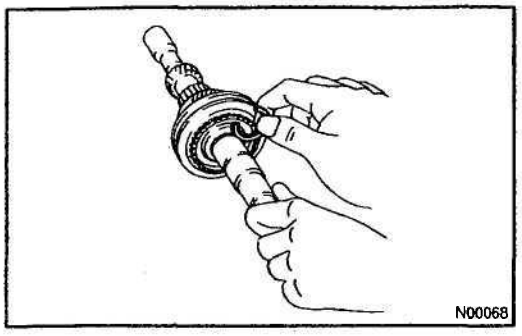

3. INSTALL SNAP RING

(a) Select a snap ring from the table below that will make the thrust clearance of the No. 2 clutch hub less than 0.1 mm (0.0039 in.).

Mark	Thickness mm (in.)	Mark	Thickness mm (in.)
0	2.30 (0.0906)	3	2.48 (0.0976)
1	2.36 (0.0929)	4	2.54 (0.1000)
2	2.42 (0.0953)	5	2.60 (0.1024)

(b) Using a screwdriver and hammer, tap in the snap ring.

HINT:

Take care not to damage the journal surface of the input shaft.

4. INSPECT 3RD GEAR THRUST CLEARANCE
(See page MX–30)

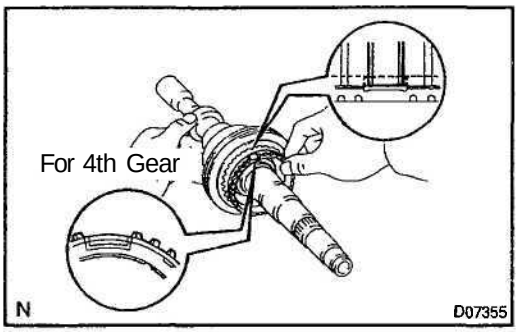

5. INSTALL SPACER, NEEDLE ROLLER BEARING, NO. 2 SYNCHRONIZER RING (FOR 4TH GEAR), 4TH GEAR AND CENTER RADIAL BALL BEARING

(a) Install the spacer.

(b) Apply gear oil to the needle roller bearings and install it.

(c) Place the No. 2 synchronizer ring (for the 4th gear) on the No. 2 hub sleeve assembly and align the No. 2 synchronizer ring slots with the No. 2 shifting keys.

(d) Install the 4th gear.

NOTICE:

Distinguish the No. 2 synchronizer ring (for the 4th gear) by the teeth on the synchronizer ring.

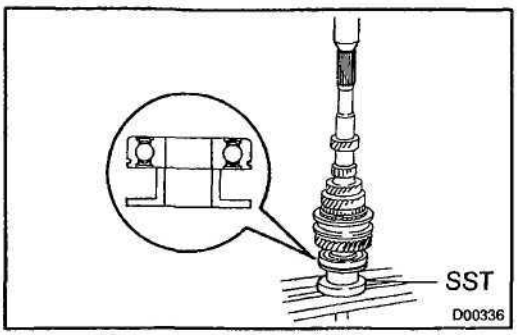

(e) Using SST and a press, install the center radial ball bearing.

SST 09608–00071

NOTICE:

Be sure to install the center radial ball bearing in the correct direction, as shown in the illustration.

HINT:

Set SST to the bearing inner race securely.

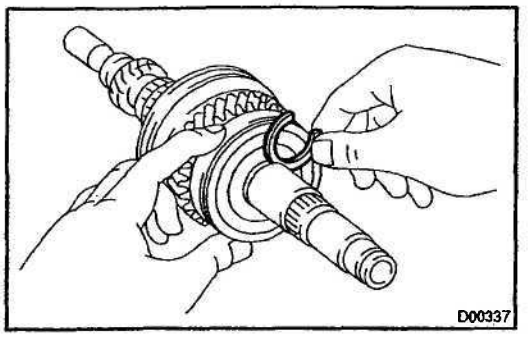

6. INSTALL SNAP RING

(a) Select a snap ring from the table below that will make the thrust clearance of the center radial ball bearing less than 0.1 mm (0.0039 in.).

Mark	Thickness mm (in.)	Mark	Thickness mm (in.)
A	2.29 (0.0902)	D	2.47 (0.0972)
B	2.35 (0.0925)	E	2.53 (0.0996)
C	2.41 (0.0949)	F	2.59 (0.1020)

(b) Using a screwdriver and hammer, tap in the snap ring.

HINT:

Take care not to damage the journal surface of the input shaft.

7. INSPECT 4TH GEAR THRUST CLEARANCE
(See page MX–30)

OUTPUT SHAFT

COMPONENTS

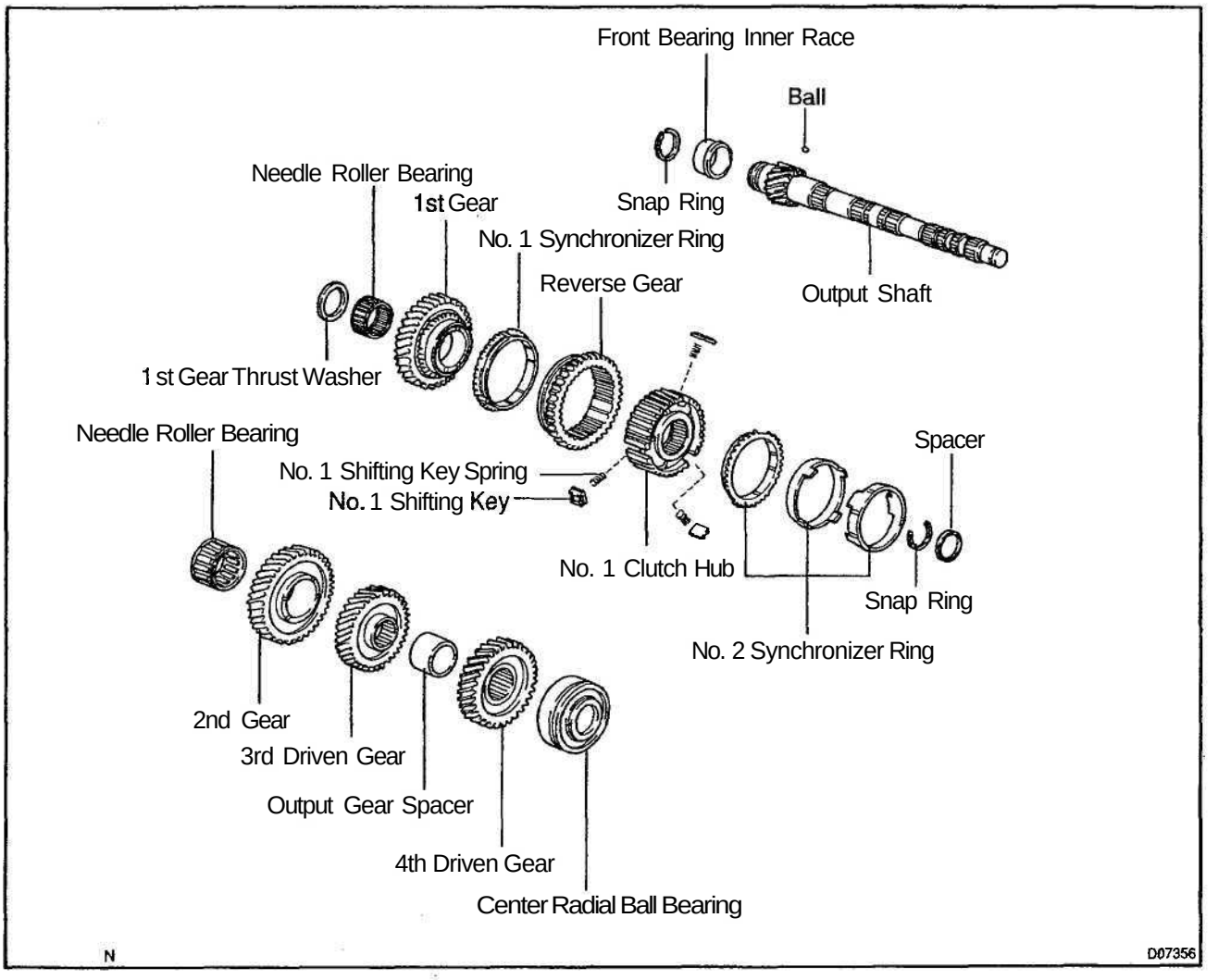

MXGAT–01

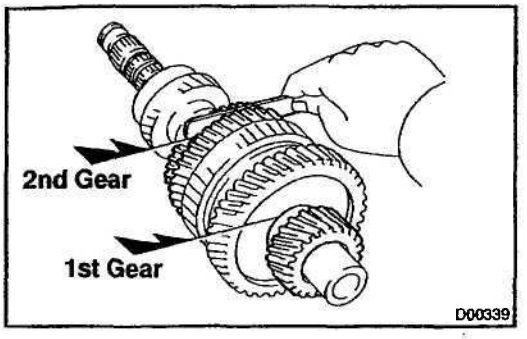

DISASSEMBLY

1. INSPECT 1ST AND 2ND GEARS THRUST CLEARANCE

Using a feeler gauge, measure the thrust clearance.

Standard clearance:
1st gear: 0.10 - 0.40 mm (0.0039 - 0.0157 in.)
2nd gear: 0.10 - 0.55 mm (0.0039 - 0.0217 in.)
Maximum clearance:
1st gear: 0.40 mm (0.0157 in.)
2nd gear: 0.55 mm (0.0217 in.)

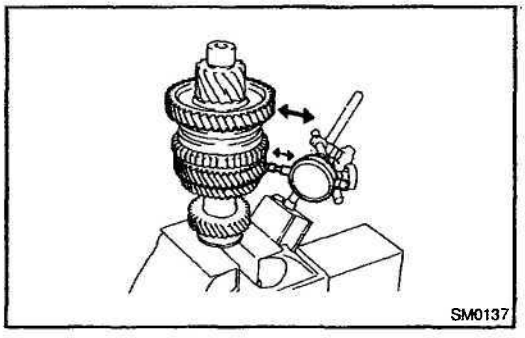

2. INSPECT 1ST AND 2ND GEARS RADIAL CLEARANCE

Using a dial indicator, measure the radial clearance between the gear and shaft.

Standard clearance:
KOYO made:
0.015 - 0.058 mm (0.0006 - 0.0023 in.)
NSK made:
0.015 - 0.056 mm (0.0006 - 0.0022 in.)
Maximum clearance:
KOYO made: 0.058 mm (0.0023 in.)
NSK made: 0.056 mm (0.0022 in.)

If the clearance exceeds the maximum, replace the gear, needle roller bearing or shaft.

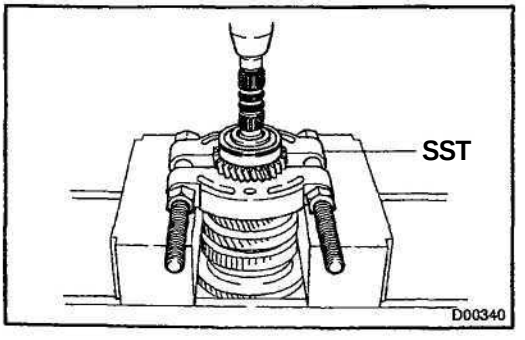

3. REMOVE CENTER RADIAL BALL BEARING, 4TH DRIVEN GEAR AND OUTPUT GEAR SPACER FROM OUTPUT SHAFT

(a) Using SST and a press, remove the center radial ball bearing and 4th driven gear.
SST 09950–00020

HINT:
Support the output shaft assembly by hand so that it will not be dropped off.

(b) Remove the output gear spacer.

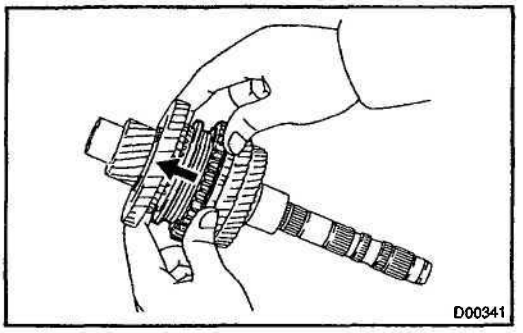

4. REMOVE 3RD DRIVEN GEAR, 2ND GEAR, NEEDLE ROLLER BEARING, SPACER AND NO. 2 SYNCHRONIZER RING

(a) Shift the reverse gear into the 1st gear.

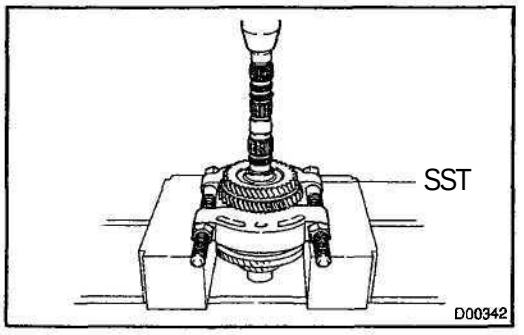

(b) Using SST and a press, remove the 3rd driven gear and 2nd gear.

SST 09950–00020

HINT:

Support the output shaft assembly by hand so that it will not be dropped off.

(c) Remove the needle roller bearing, spacer and No. 2 synchronizer rings.

5. REMOVE SNAP RING

Using 2 screwdrivers and a hammer, tap out the snap ring.

HINT:

Take care not to damage the journal surface of the output shaft.

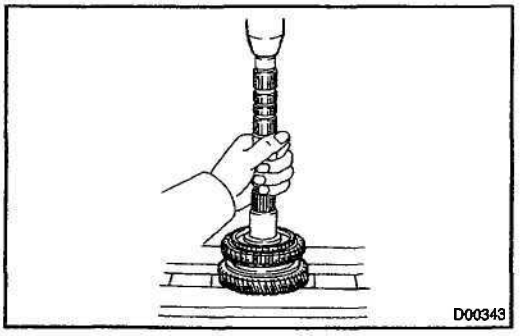

6. REMOVE REVERSE GEAR ASSEMBLY, 1ST GEAR, NO. 1 SYNCHRONIZER RING, NEEDLE ROLLER BEARING, 1ST GEAR THRUST WASHER AND BALL

(a) Using a press, remove the reverse gear assembly, 1st gear and No. 1 synchronizer ring.

HINT:

Support the output shaft assembly by hand so that it will not be dropped off.

(b) Remove the needle roller bearing and 1st gear thrust washer.

(c) Using a magnetic finger, remove the ball.

7. REMOVE SNAP RING

Using 2 screwdrivers and a hammer, tap out the snap ring.

HINT:

Take care not to damage the journal surface of the output shaft.

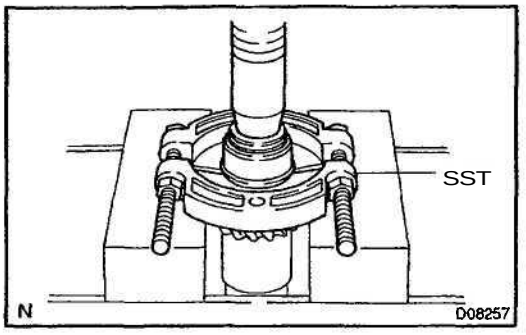

8. REMOVE FRONT BEARING INNER RACE

Using SST and a press, remove the front bearing inner race.

SST 09950–00020

NOTICE:

When replacing the front bearing inner race, replace the output shaft front bearing along with it.

HINT:

Support the output shaft by hand so that it will not be dropped off.

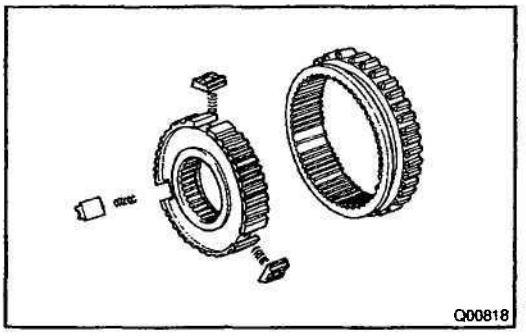

9. DISASSEMBLE REVERSE GEAR ASSEMBLY

(a) Remove the reverse gear from the No. 1 clutch hub.

(b) Remove the 3 No. 1 shifting keys and No. 1 shifting key springs from the No. 1 clutch hub.

MX0A2-01

INSPECTION

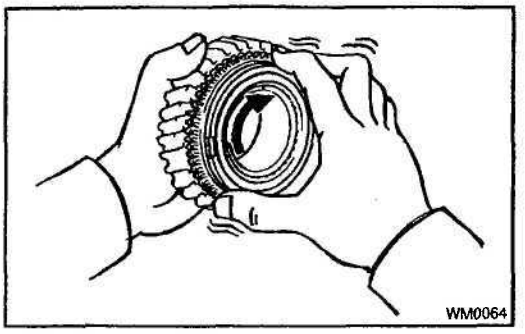

1. INSPECT 1ST GEAR SYNCHRONIZER RING

(a) Check for wear or damage.

(b) Check the braking effect of the synchronizer ring. Turn the synchronizer ring in one direction while pushing it to the gear cone. Check that the ring locks.

If the braking effect is insufficient, apply a small amount of the fine lapping compound between the synchronizer ring and gear cone. Lightly rub the synchronizer ring and gear cone together.

NOTICE:

Ensure the fine lapping compound is completely washed off after rubbing.

(c) Check again the braking effect of the synchronizer ring.

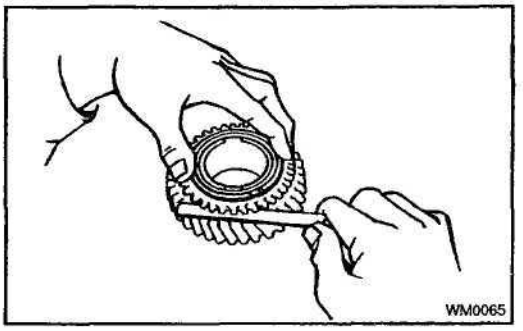

(d) Using a feeler gauge, measure the clearance between the synchronizer ring back and gear spline end.

Minimum clearance: 0.75 mm (0.0295 in.)

If the clearance is less than the minimum, replace the synchronizer ring, and apply a small amount of the fine lapping compound on gear cone.

NOTICE:

Ensure the fine lapping compound is completely washed off after rubbing.

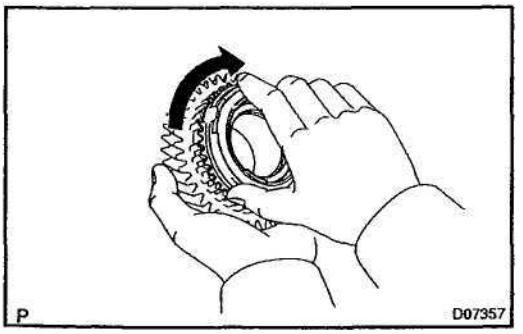

2. INSPECT 2ND GEAR SYNCHRONIZER RING

(a) Check for wear or damage.

(b) Check the braking effect of the synchronizer ring. Turn the synchronizer ring in one direction while pushing it to the gear cone. Check that the ring locks.

If the braking effect is insufficient, replace the synchronizer ring.

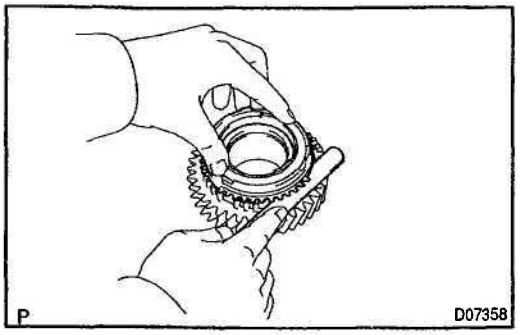

(c) Using a feeler gauge, measure the clearance between the synchronizer ring back and gear spline end.

Minimum clearance: 0.70 mm (0.0276 in.)

If the clearance is less than the minimum, replace the synchronizer ring.

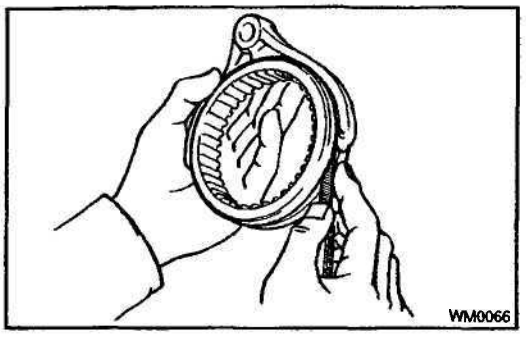

3. INSPECT GEAR SHIFT FORK AND REVERSE GEAR CLEARANCE

Using a feeler gauge, measure the clearance between the reverse gear and gear shift fork.

Maximum clearance: 0.35 mm (0.014 in.)

If the clearance exceeds the maximum, replace the gear shift fork or hub sleeve.

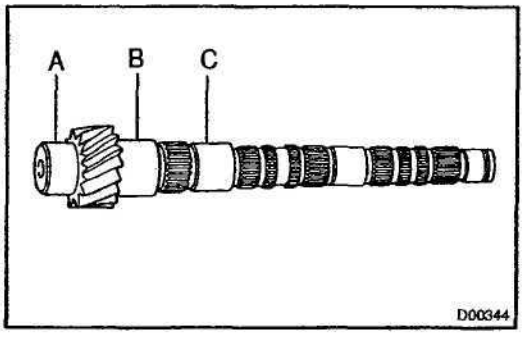

4. INSPECT OUTPUT SHAFT

(a) Check the output shaft for wear or damage.

(b) Using a micrometer, measure the outer diameter of the output shaft journal surface.

Minimum outer diameter:

Part A: 32.985 mm (1.2986 in.)

Part B: 37.985 mm (1.4955 in.)

Part C: 31.985 mm (1.2592 in.)

If the outer diameter is less than the minimum, replace the output shaft.

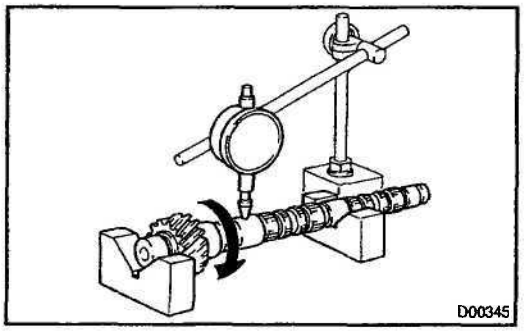

(c) Using a dial indicator, check the shaft runout.

Maximum runout: 0.03 mm (0.0012 in.)

If the runout exceeds the maximum, replace the output shaft.

REASSEMBLY

HINT:
Coat all of the sliding and rotating surfaces with gear oil before reassembly.

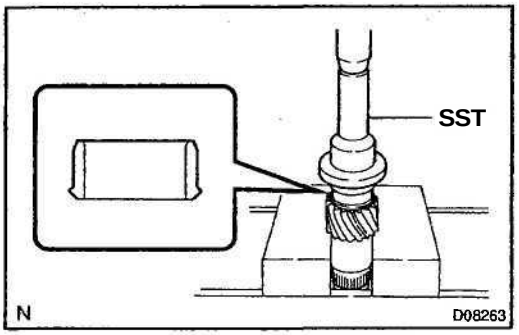

1. INSTALL FRONT BEARING INNER RACE

Using SST and a press, install the front bearing inner race.

SST 09223–50010

NOTICE:

Be sure to install the front bearing inner race in the correct direction, as shown in the illustration.

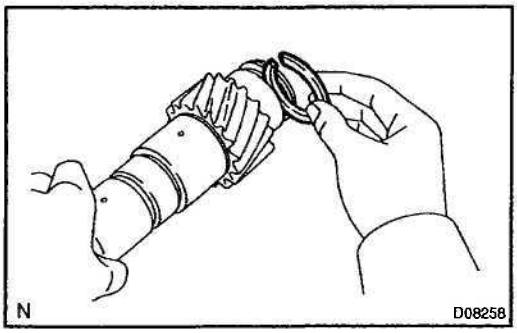

2. INSTALL SNAP RING

(a) Select a snap ring from the table below that will make the thrust clearance of the front bearing inner race less than 0.1 mm (0.0039 in.).

Mark	Thickness mm (in.)	Mark	Thickness mm (in.)
7	1.85 (0.0728)	3	2.05 (0.0807)
8	1.90 (0.0748)	4	2.10 (0.0827)
1	1.95 (0.0768)	5	2.15 (0.0846)
2	2.00 (0.0787)	6	2.20 (0.0866)

(b) Using a screwdriver and hammer, tap in the snap ring.

HINT:
Take care not to damage the journal surface of the output shaft.

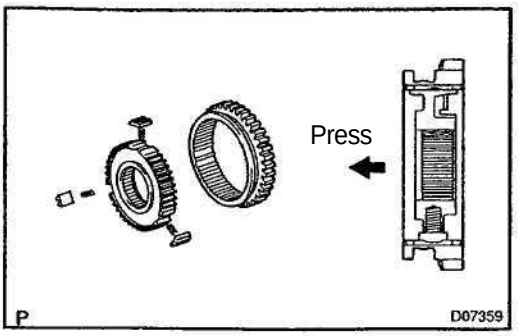

3. ASSEMBLE REVERSE GEAR ASSEMBLY

(a) Install the 3 No. 1 shifting key springs and No. 1 shifting keys to the No. 1 clutch hub.

(b) Install the No. 1 clutch hub to the reverse gear.

NOTICE:

Assemble the No. 1 clutch hub and reverse gear in the direction shown in the illustration.

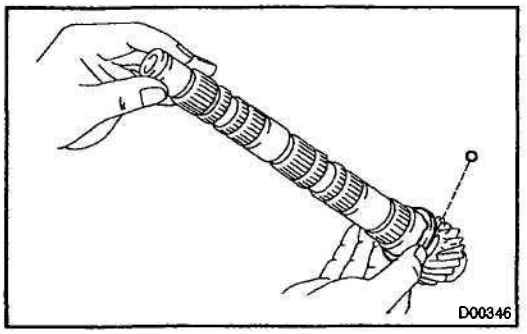

4. INSTALL BALL, 1ST GEAR THRUST WASHER, NEEDLE ROLLER BEARING, 1ST GEAR, NO. 1 SYNCHRONIZER RING AND REVERSE GEAR ASSEMBLY TO OUTPUT SHAFT

(a) Using a magnetic finger, install the ball to the output shaft.

(b) Fit the 1st gear thrust washer groove securely over the locking ball when installing the thrust on the output shaft.

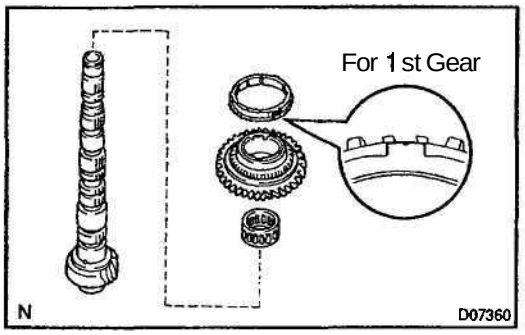

(c) Apply gear oil to the needle roller bearing and install it.

(d) Install the 1st gear and No. 1 synchronizer ring.

NOTICE:

Distinguish the No. 1 synchronizer ring by the teeth on the synchronizer ring.

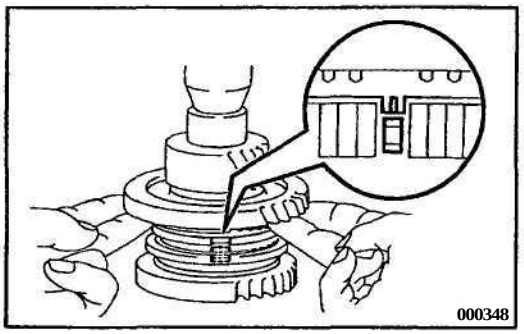

(e) Place the reverse gear assembly and align the No. 1 synchronizer ring slots with the No. 1 shifting keys.

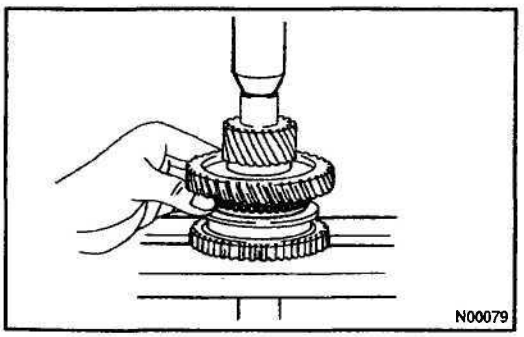

(f) Using a press, install the reverse gear assembly.

NOTICE:

- **Be sure to install the reverse gear assembly in the correct direction, as shown in the illustration.**
- **When installing, make sure that the ball is placed in a groove of the 1st gear thrust washer.**

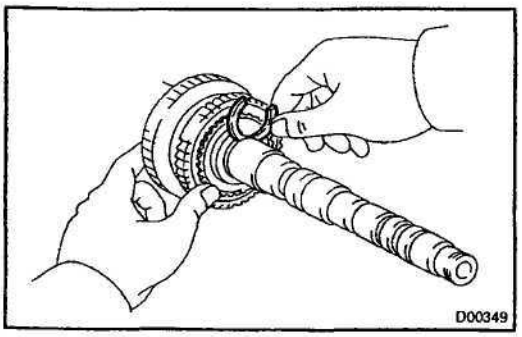

5. INSTALL SNAP RING

(a) Select a snap ring from the table below that will make the thrust clearance of the No. 1 clutch hub less than 0.1 mm (0.0039 in.).

Mark	Thickness mm (in.)	Mark	Thickness mm (in.)
A	2.50 (0.0984)	D	2.68 (0.1055)
B	2.56 (0.1008)	E	2.74 (0.1079)
C	2.62(0.1031)	F	2.80 (0.1102)

(b) Using a screwdriver and hammer, tap in the snap ring.

HINT:

Take care not to damage the journal surface of the output shaft.

6. INSPECT 1ST GEAR THRUST CLEARANCE (See page MX-38)

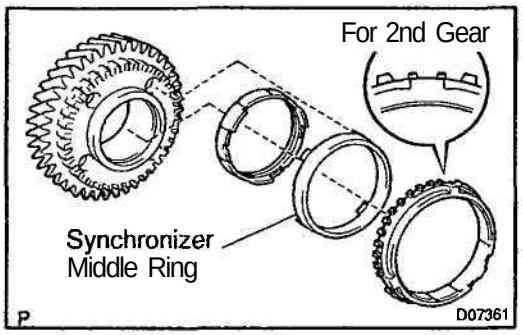

7. INSTALL SPACER, NEEDLE ROLLER BEARING, NO.2 SYNCHRONIZER RING, 2ND GEAR AND 3RD DRIVEN GEAR

(a) Install the spacer.

(b) Apply gear oil to the needle roller bearing and install it.

(c) Place the No. 2 synchronizer rings on the 2nd gear.

NOTICE:

- **Properly fit the synchronizer middle ring claws into the holes in the 2nd gear.**
- **Distinguish the No. 2 synchronizer ring by the teeth on the synchronizer ring.**

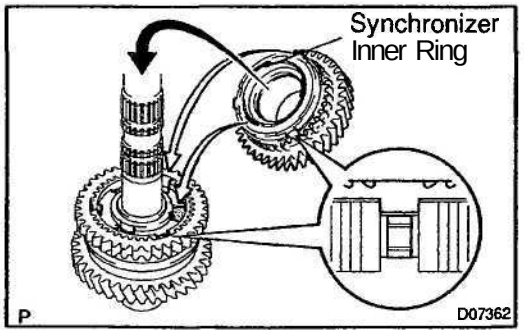

(d) Place the 2nd gear with the No. 2 synchronizer rings and align the No. 2 synchronizer ring slots with the No. 1 shifting keys.

NOTICE:

Fit the synchronizer inner ring claws into the slots in the No. 1 clutch hub.

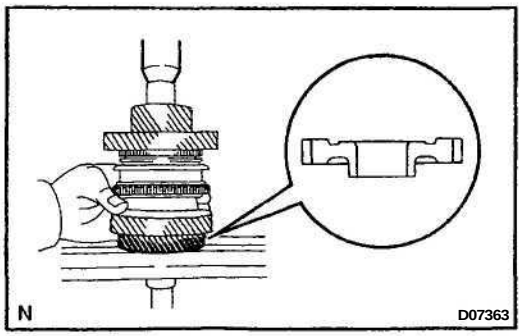

(e) Using a press, install the 3rd driven gear.

NOTICE:

Be sure to install the 3rd driven gear in the correct direction, as shown in the illustration.

8. INSPECT 2ND GEAR THRUST CLEARANCE (See page MX-38)

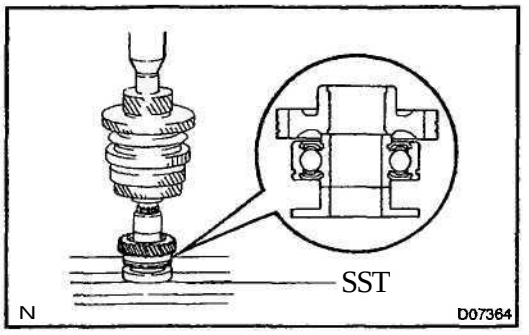

9. INSTALL OUTPUT GEAR SPACER, 4TH DRIVEN GEAR AND CENTER RADIAL BALL BEARING

(a) Install the output gear spacer.

(b) Using SST and a press, install the 4th driven gear and center radial ball bearing.

SST 09608–00071

NOTICE:

Be sure to install the 4th driven gear and center radial ball bearing in the correct direction, as shown in the illustration.

HINT:

Set SST to the bearing inner race securely.

SHIFT AND SELECT LEVER SHAFT

COMPONENTS

MX01R–02

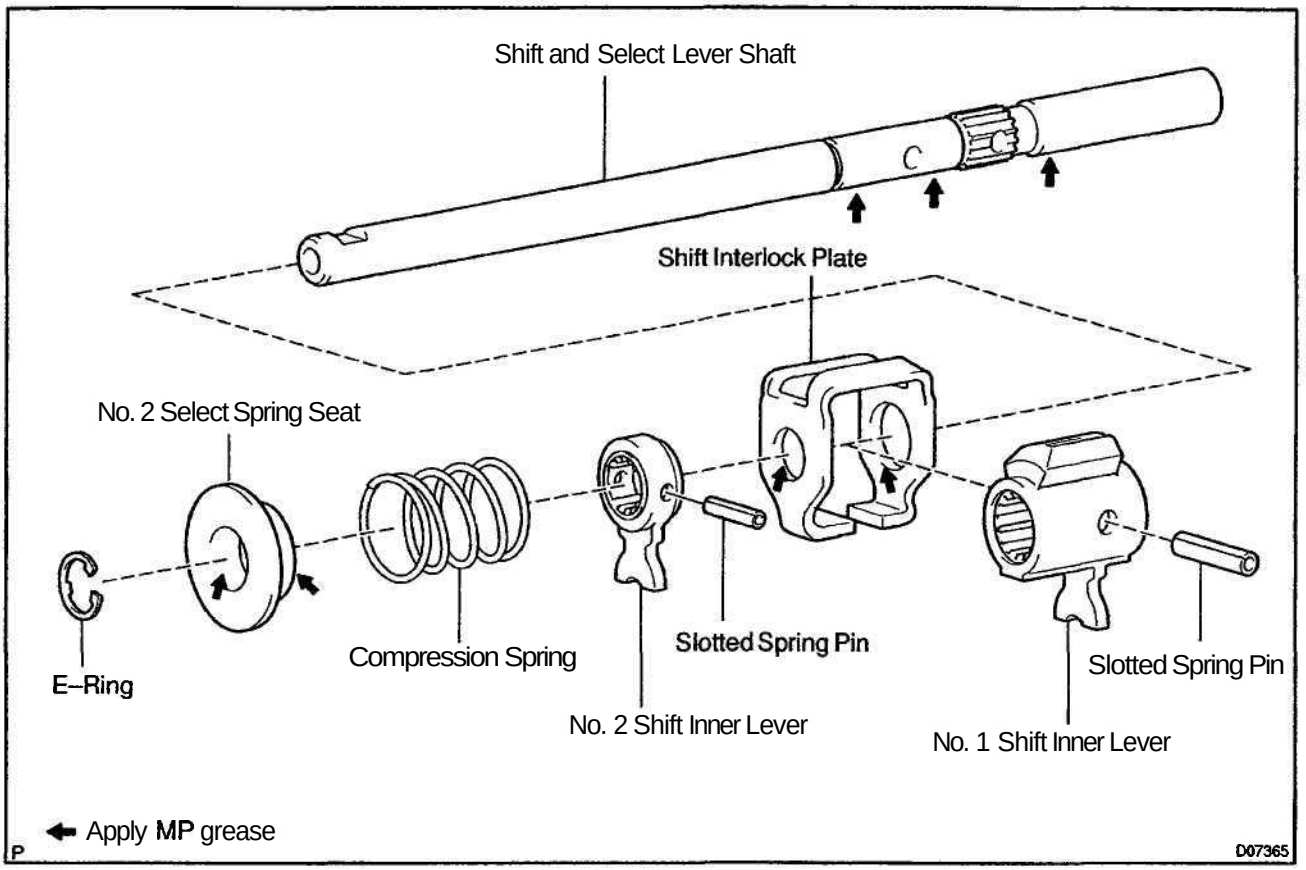

DIFFERENTIAL CASE

COMPONENTS

MX015–02

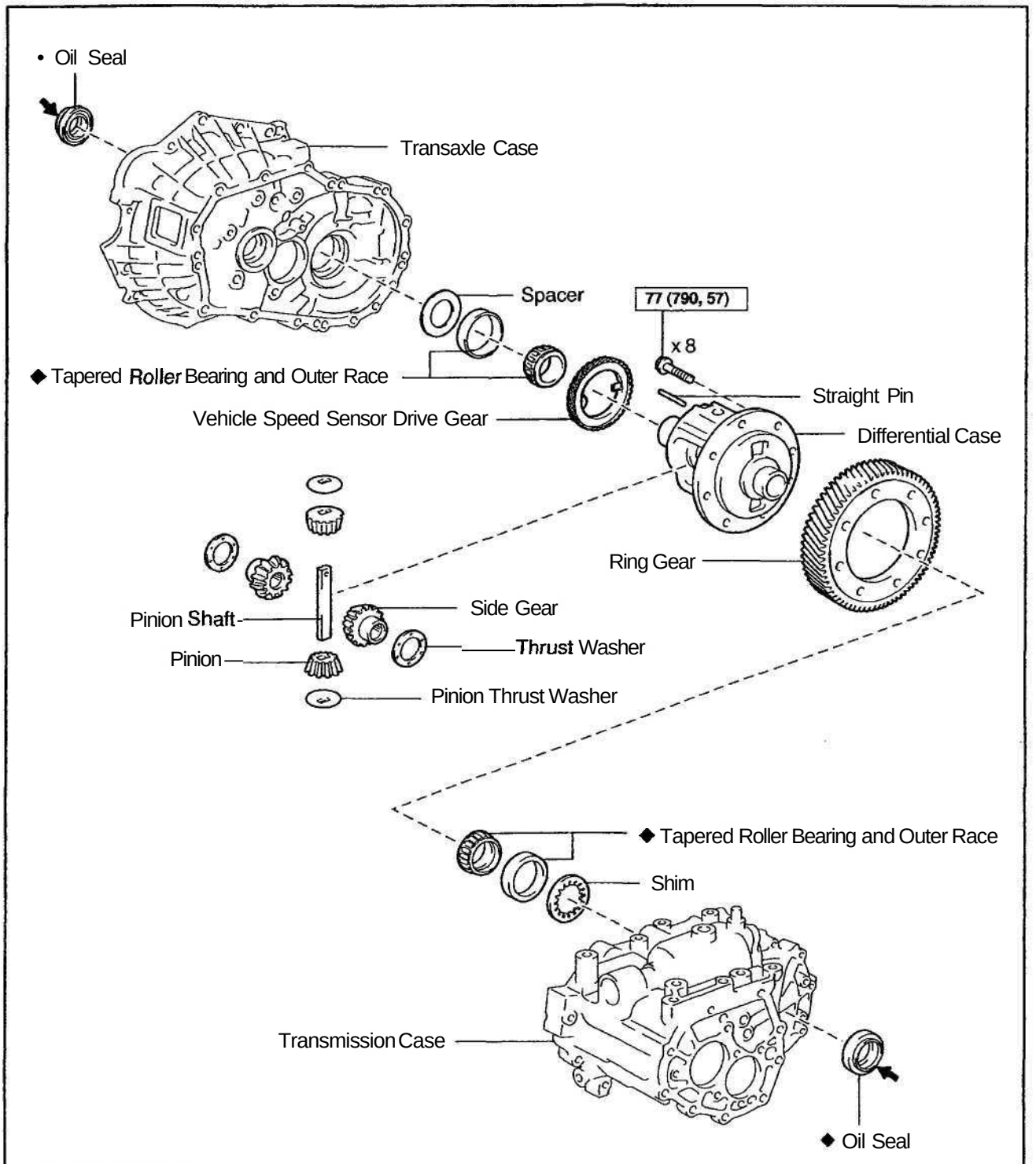

MX0A4-01

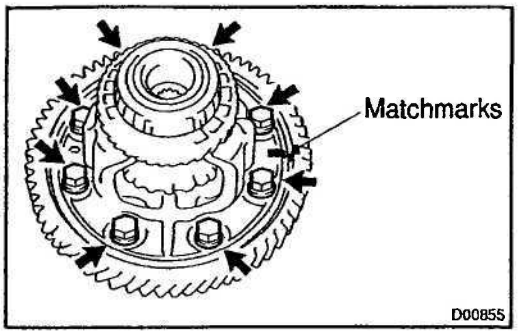

DISASSEMBLY

1. REMOVE RING GEAR

(a) Place matchmarks on the ring gear and differential case.
(b) Remove the 8 bolts.
(c) Using a copper hammer, tap on the ring gear to remove it from the differential case.

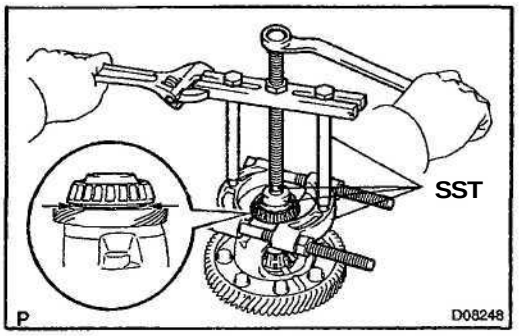

2. Vehicle speed sensor drive gear side:
REMOVE TAPERED ROLLER BEARING FROM DIFFERENTIAL CASE

(a) Using SST, remove the tapered roller bearing.
SST 09950–00020, 09950–00030, 09950–40011 (09957–04010), 09950–60010 (09951–00350)

HINT:
Set the claw of SST to the bearing inner race securely.
(b) Remove the vehicle speed sensor drive gear.

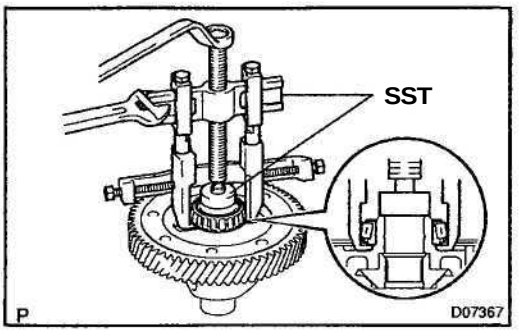

3. Ring gear side:
REMOVE TAPERED ROLLER BEARING FROM DIFFERENTIAL CASE

Using SST, remove the tapered roller bearing.
SST 09950-40011 (09951-04010, 09952–04010, 09953-04020, 09954-04010, 09955–04061, 09957-04010, 09958–04011), 09950-60010 (09951–00350)

HINT:
Set the claw of SST to the bearing inner race at the position where the differential case is indented.

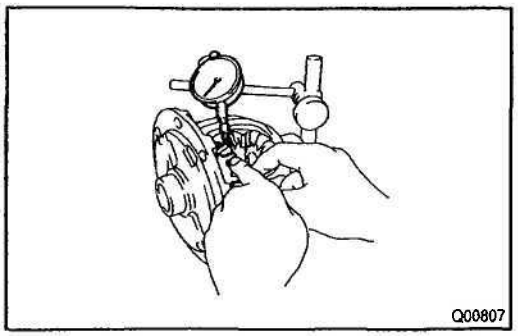

4. INSPECT SIDE GEAR BACKLASH

Using a dial indicator, measure the backlash of one side gear while holding one pinion toward the differential case.

Standard backlash:
0.05 - 0.20 mm (0.0020 - 0.0079 in.)

If the backlash is not within the specification, install the correct thrust washer to the side gears.

5. DISASSEMBLE DIFFERENTIAL CASE

(a) Using a pin punch and hammer, drive out the straight pin.
(b) Remove the pinion shaft from the differential case.
(c) Remove the 2 pinions and side gears with the 4 thrust washers from each gear.

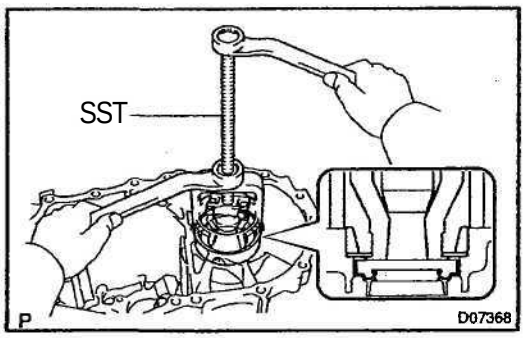

6. Transmission case side:

IF NECESSARY, REPLACE OIL SEAL AND TAPERED ROLLER BEARING OUTER RACE

(a) Using SST, pull out the tapered roller bearing outer race and shim.
SST 09612–65014

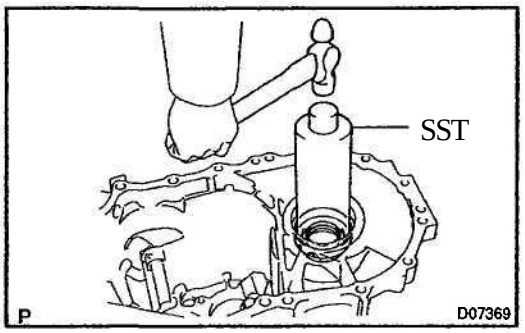

(b) Using SST and a hammer, drive out the oil seal.
SST 09226–10010

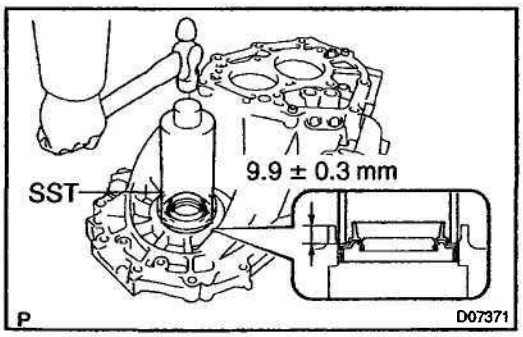

(c) Using SST and a hammer, drive in a new oil seal.
SST 09226–10010
Drive in depth: 9.9 ± 0.3 mm (0.390 ± 0.012 in.)
(d) Coat the lip of the oil seal with MP grease.
(e) Place the shim into the differential case.

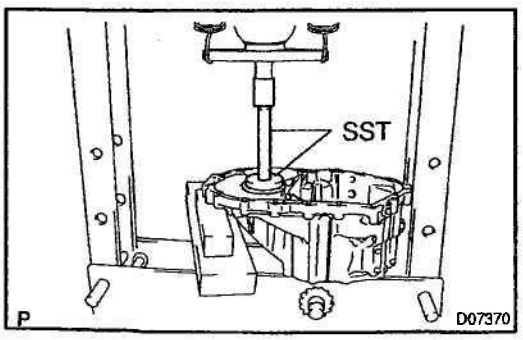

(f) Using SST and a press, install the tapered roller bearing outer race.
SST 09950-60020 (09951-00710), 09950-70010 (09951–07150)

NOTICE:

When replacing the tapered roller bearing outer race, replace the tapered roller bearing along with it.

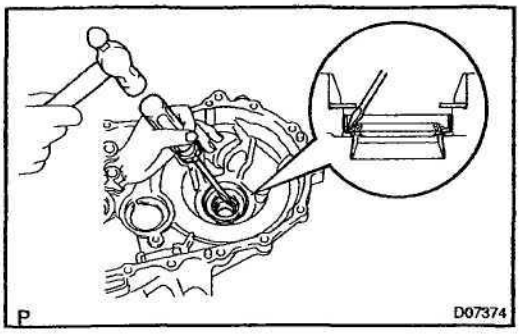

7. Transaxle case side:
IF NECESSARY, REPLACE OIL SEAL AND TAPERED ROLLER BEARING OUTER RACE

(a) Using a screwdriver and hammer, drive out the oil seal.

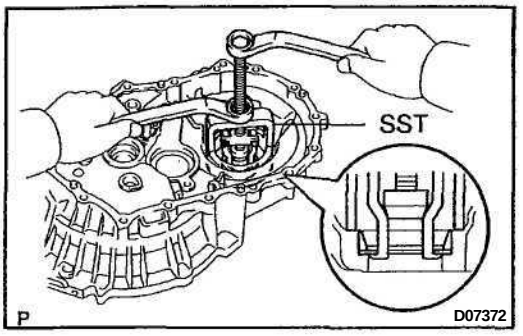

(b) Using SST, pull out the tapered roller bearing outer race and spacer.
SST 09612–65014

(c) Place the spacer into the differential case.

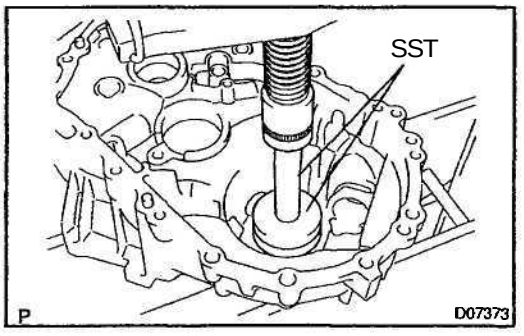

(d) Using SST and a press, install the tapered roller bearing outer race.
SST 09950–60020 (09951–00680), 09950-70010 (09951–07150)

NOTICE:
When replacing the tapered roller bearing outer race, replace the tapered roller bearing along with it.

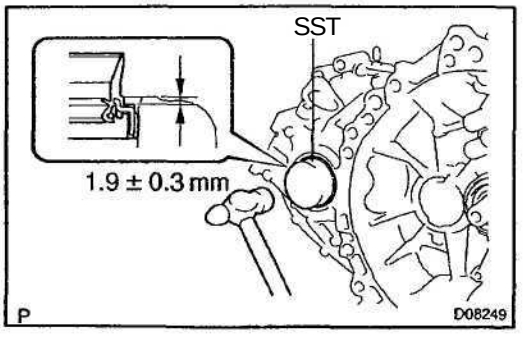

(e) Using SST and a hammer, drive in a new oil seal.
SST 09710–28021 (09710–08041)
Drive in depth: 1.9 ± 0.3 mm (0.075 ± 0.012 in.)

(f) Coat the lip of the oil seal with MP grease.

MX01U-02

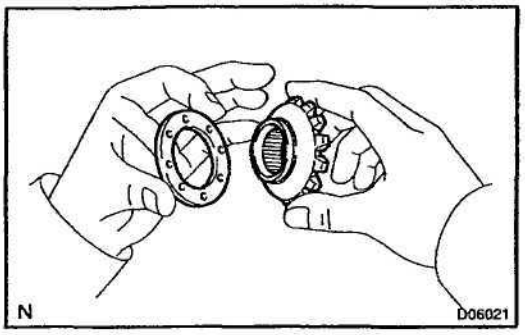

REASSEMBLY

1. ASSEMBLE DIFFERENTIAL CASE

(a) Install the correct thrust washers and side gears.
Refer to the table below, select thrust washers which will ensure that the backlash is within the specification. Try to select washers of the same size for both sides.

Standard backlash:
0.05 - 0.20 mm (0.0020 - 0.0079 in.)

Thickness mm (in.)	Thickness mm (in.)
0.95 (0.0374)	1.10 (0.0433)
1.00 (0.0394)	1.15(0.0453)
1.05 (0.0413)	1.20 (0.0472)

(b) Install the thrust washers and side gears in the differential case.

(c) Install the pinion shaft.

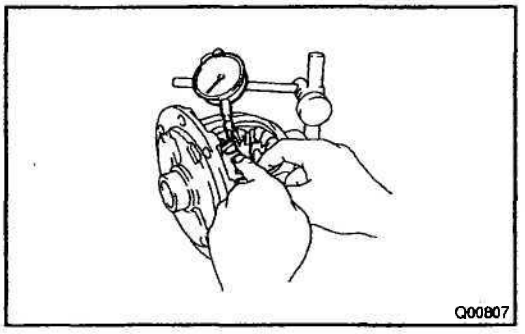

(d) Using a dial indicator, check the side gear backlash.
Measure the side gear backlash while holding one pinion toward the differential case.

Standard backlash:
0.05 - 0.20 mm (0.0020 - 0.0079 in.)

If the backlash is not within the specification, install a thrust washer of different thickness.

(e) Using a pin punch and hammer, drive in the straight pin through the differential case and hole in the pinion shaft.

(f) Using a chisel and hammer, caulk the pin holes around the circumference of the differential case.

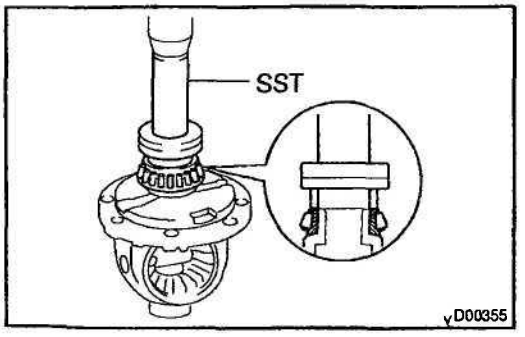

2. Ring gear side: INSTALL TAPERED ROLLER BEARING

Using SST and a press, install the tapered roller bearing.
SST 09350–32014 (09351-32120, 09351-32140)

NOTICE:
When replacing the tapered roller bearing outer race, replace the tapered roller bearing along with it.

HINT:
Set SST to the bearing inner race securely.

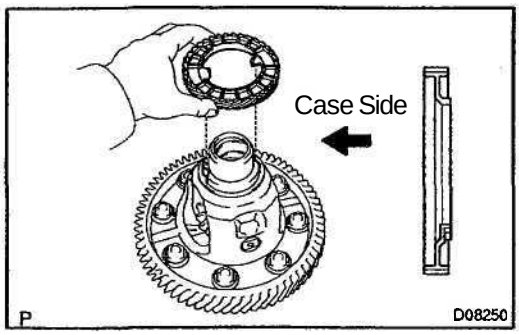

3. Vehicle speed sensor drive gear side: INSTALL TAPERED ROLLER BEARING

(a) Place the vehicle speed sensor drive gear in position to stop it turning, and install the vehicle speed sensor drive gear.

NOTICE:

Be sure to install the vehicle speed sensor drive gear in the correct direction, as shown in the illustration.

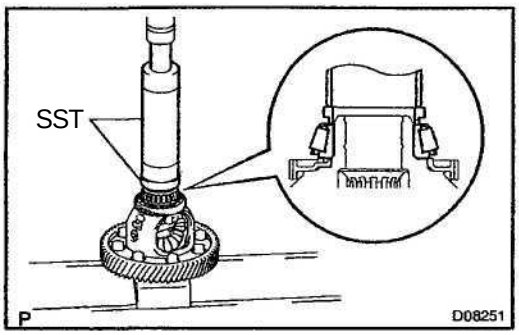

(b) Using SST and a press, install a new side bearing.
SST 09316-60011 (09316-00011), 09350-32014 (09351-32120)

NOTICE:

When replacing the tapered roller bearing outer race, replace the tapered roller bearing along with it.

HINT:

Set SST to the bearing inner race securely.

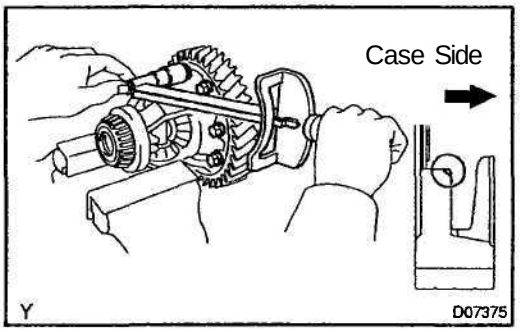

4. INSTALL RING GEAR ON DIFFERENTIAL CASE

(a) Clean the contact surface of the differential case.
(b) Heat the ring gear in boiling water.
(c) Carefully take the ring gear out of the water.
(d) After the moisture on the ring gear has completely evaporated, quickly install the ring gear to the differential case.

HINT:

Align the matchmarks on the differential case and contact the ring gear.

(e) Temporarily install the 8 set bolts.

CAUTION:

The ring gear set bolts should not be tightened until the ring gear has cooled sufficiently.

(f) After the ring gear has cooled sufficiently, torque the ring gear set bolts uniformly at a time.
Torque: 77 N·m (790 kgf·cm, 57 ft·lbf)

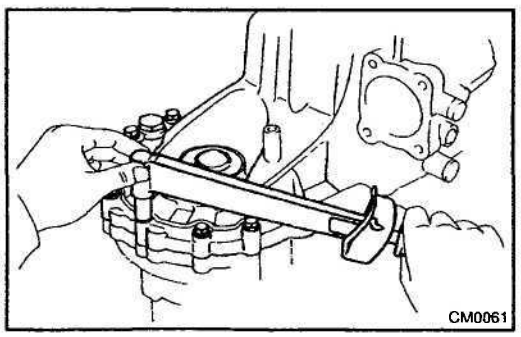

5. INSPECT DIFFERENTIAL TAPERED ROLLER BEARING PRELOAD

NOTICE:

Perform this only when replacing the tapered roller bearing and outer race of the differential case.

(a) Install the differential case assembly to the transaxle case.
(b) Install the transmission case to the transaxle case with the 16 bolts.
Torque: 29 N·m (300 kgf·cm, 22 ft·lbf)

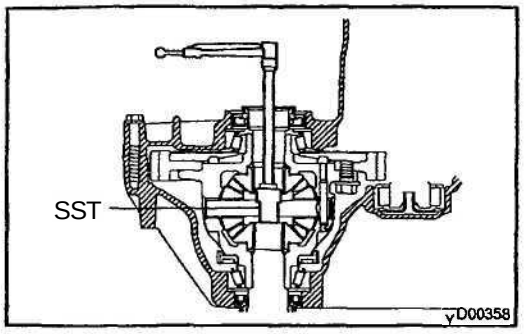

(c) Using SST and a torque wrench, turn the differential case assembly right and left 2 or 3 times to allow the bearings to settle.
SST 09564–32011

(d) Using SST and a torque wrench, measure the preload.
SST 09564–32011
Preload (at starting):
New bearing
0.8 – 1.6 N·m (8 – 16 kgf cm, 6.9 – 13.9 in.·lbf)
Reused bearing
0.5 – 1.0 N·m (5 – 10 kgf·cm, 4.3 - 8.7 in.·lbf)

If the preload is not within the specification, remove the transmission case side outer race of the tapered roller bearing with SST (See page MX–49). Select an appropriate shim.

HINT:

The preload will change by about 0.3 - 0.4 N·m (3 – 4 kgf·cm, 2.6 - 3.5 in.·lbf) corresponding to a change of 0.05 mm (0.0020 in.) in shim thickness.

Mark	Thickness mm (in.)	Mark	Thickness mm (in.)
AA	2.10 (0.0827)	LL	2.60 (0.1024)
BB	2.15 (0.0846)	MM	2.65 (0.1043)
CC	2.20 (0.0866)	NN	2.70 (0.1063)
DD	2.25 (0.0886)	PP	2.75 (0.1083)
EE	2.30 (0.0906)	QQ	2.80 (0.1102)
FF	2.35 (0.0925)	RR	2.85 (0.1122)
GG	2.40 (0.0945)	SS	2.90 (0.1142)
HH	2.45 (0.0965)	TT	2.95 (0.1161)
JJ	2.50 (0.0984)	UU	3.00(0.1181)
KK	2.55 (0.1004)	–	–

(e) Remove the 16 bolts and transmission case.

(f) Remove the differential case assembly.

REVERSE SHIFT WARNING BUZZER SYSTEM

LOCATION

MX01V-02

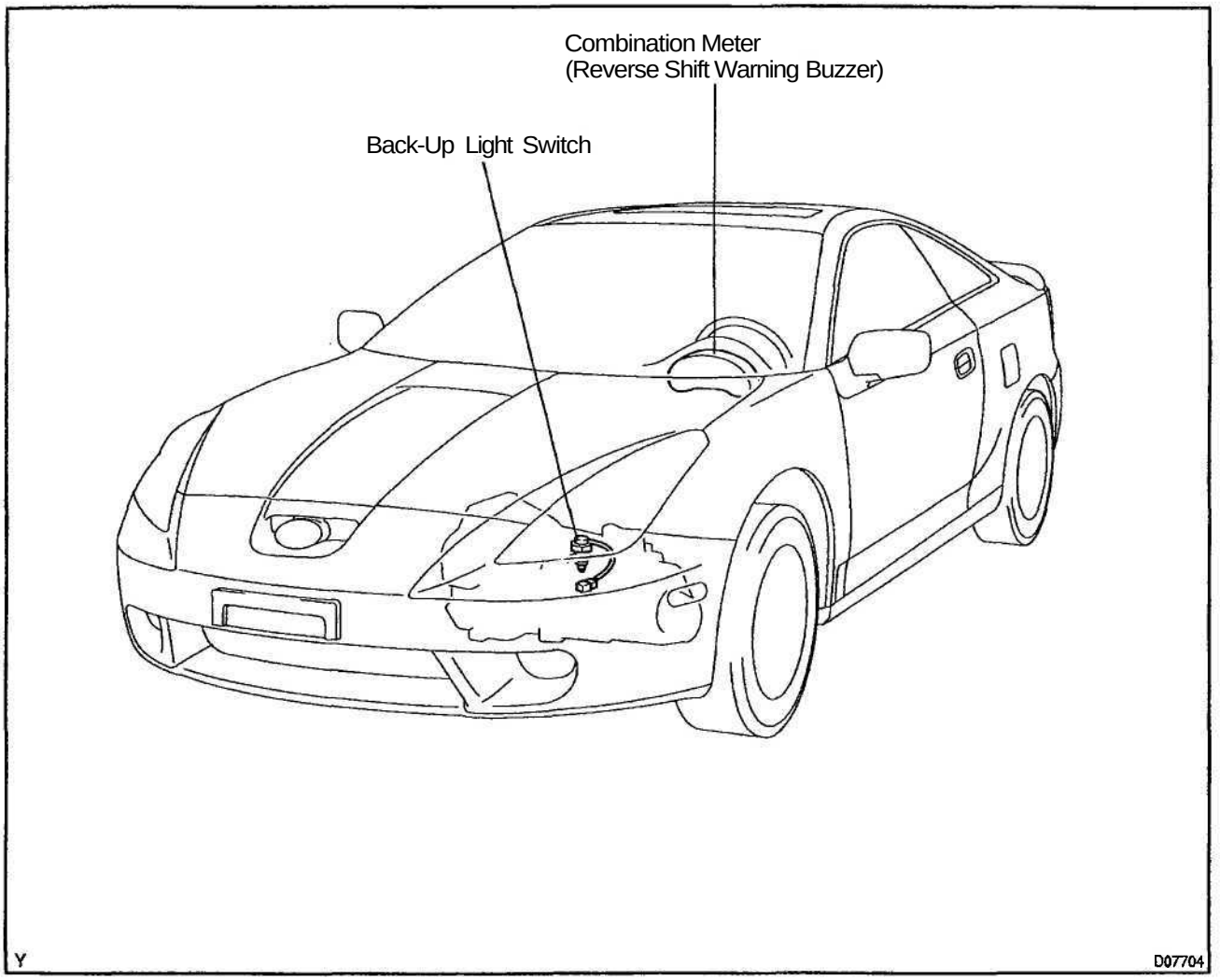

INSPECTION

1. INSPECT REVERSE SHIFT WARNING BUZZER SYSTEM (See page BE–46)
2. INSPECT BACK-UP LIGHT SWITCH CONTINUITY (See page BE–30)

SHIFT LEVER AND CONTROL CABLE

COMPONENTS

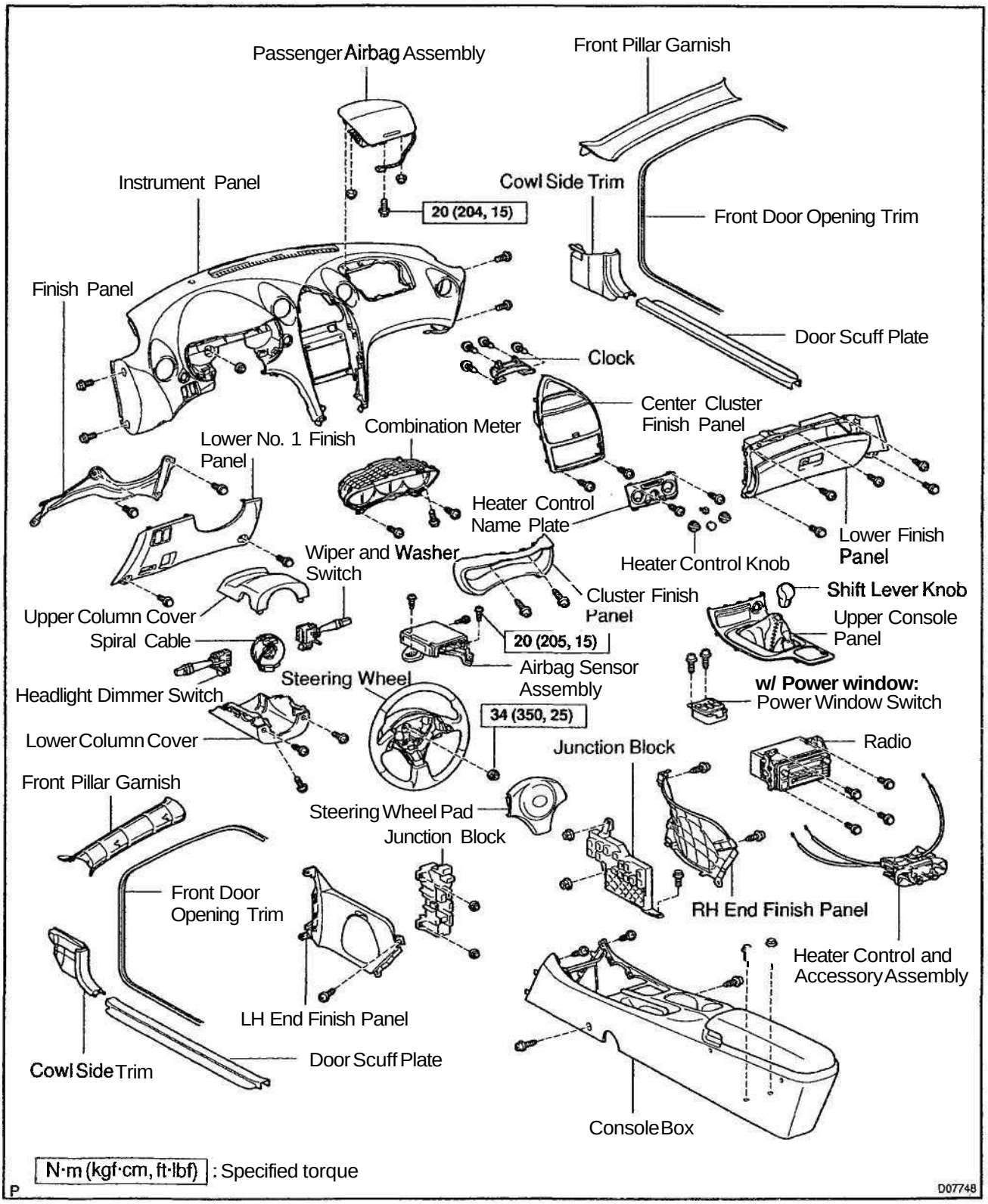

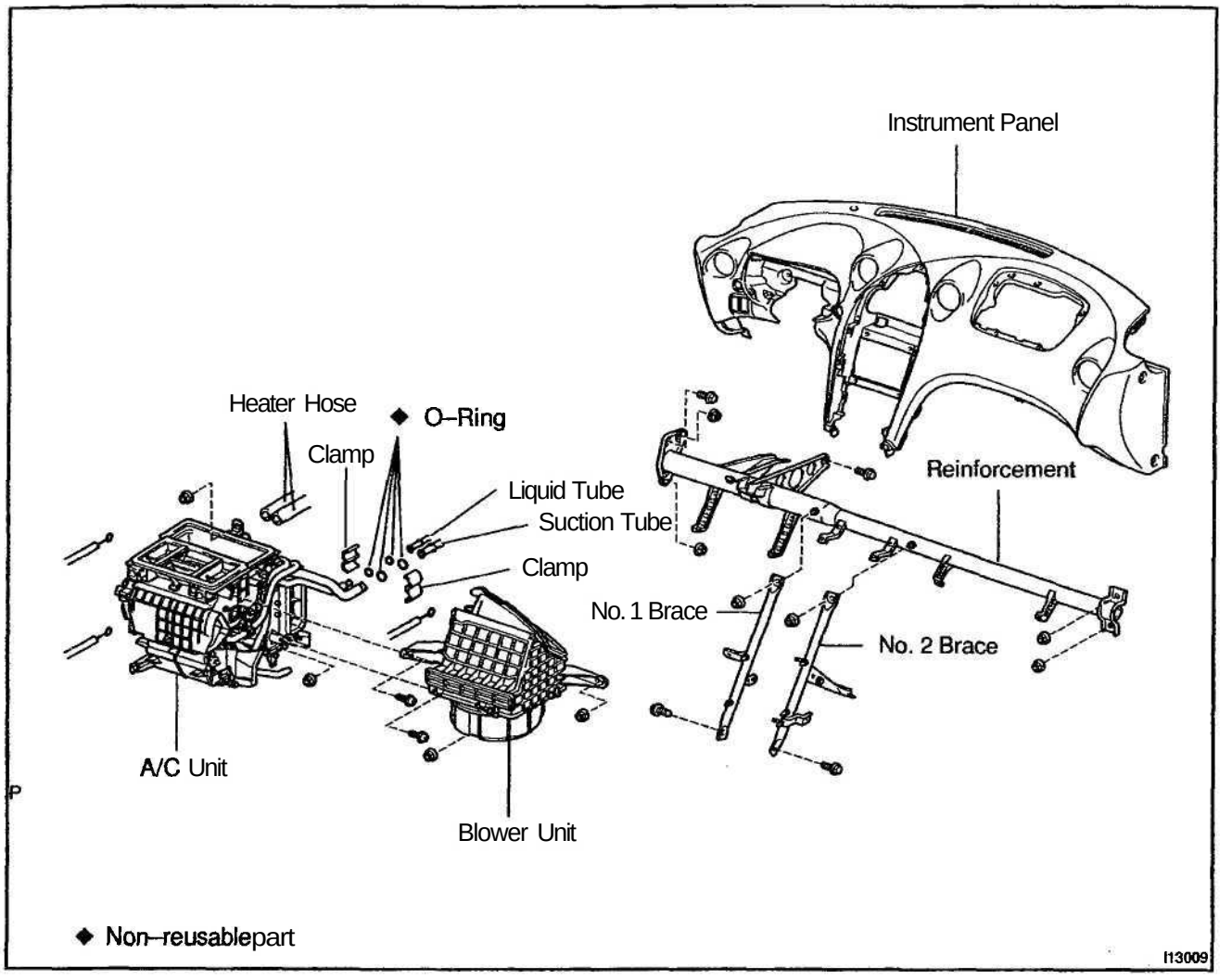
Instrument Panel
Heater Hose
◆ O–Ring
Clamp
Liquid Tube
Suction Tube
Clamp
Reinforcement
No. 1 Brace
No. 2 Brace
A/C Unit
Blower Unit
◆ Non–reusable part
I13009

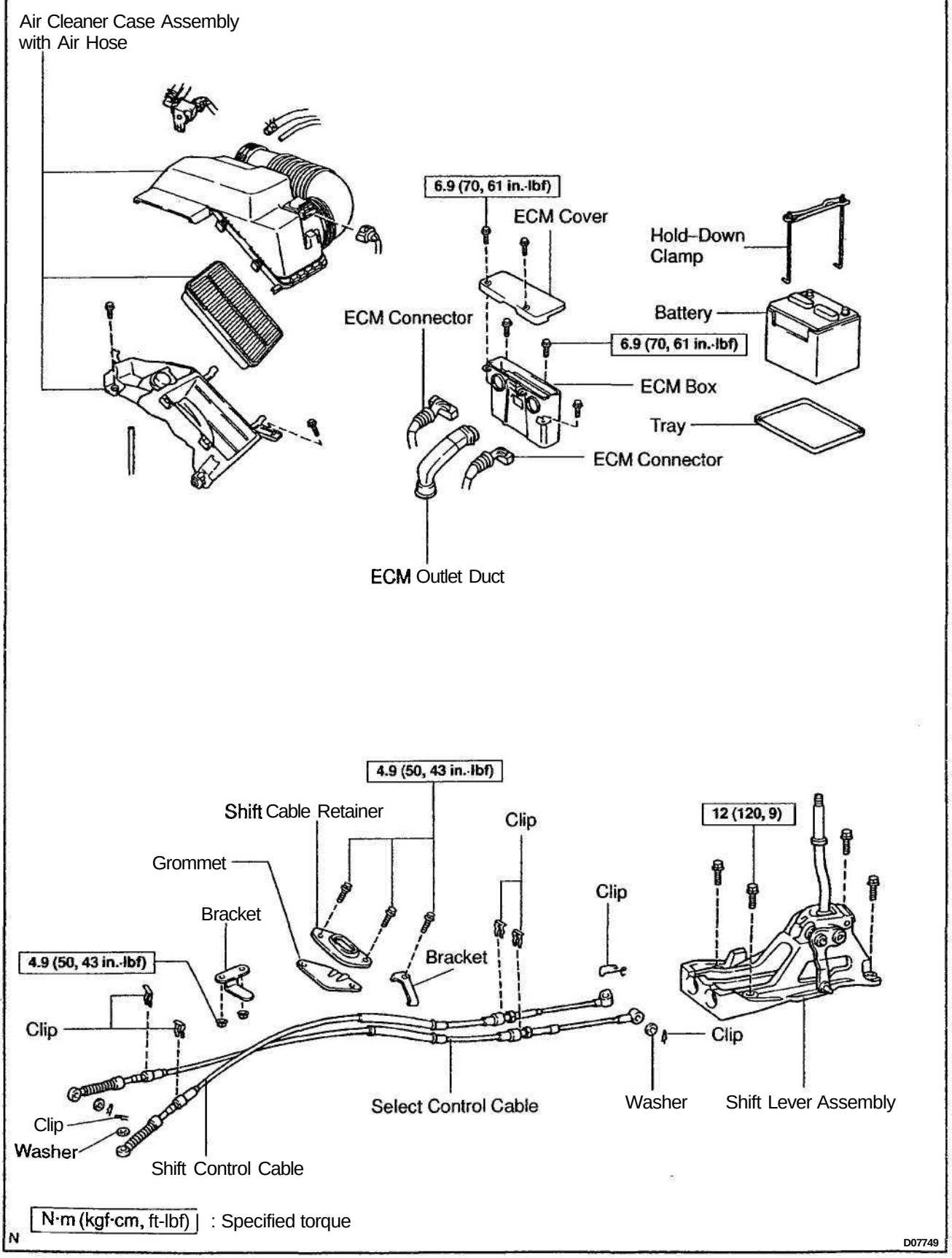
Air Cleaner Case Assembly with Air Hose
6.9 (70, 61 in.-lbf)
ECM Cover
Hold-Down Clamp
ECM Connector
Battery
6.9 (70, 61 in.-lbf)
ECM Box
Tray
ECM Connector
ECM Outlet Duct
4.9 (50, 43 in.-lbf)
Shift Cable Retainer
Clip
12 (120, 9)
Grommet
Clip
Bracket
Bracket
4.9 (50, 43 in.-lbf)
Clip
Clip
Clip
Select Control Cable
Washer
Shift Lever Assembly
Clip
Washer
Shift Control Cable
N·m (kgf·cm, ft-lbf) : Specified torque
N
D07749

ISMSO

AUTOMATIC TRANSAXLE (U240E)

AUTOMATIC TRANSAXLE SYSTEM. AX–1
VEHICLE SPEED SENSOR. AX–3
SPEED SENSOR. AX–4
ATF TEMPERATURE SENSOR. AX–6
PARK/NEUTRAL POSITION (PNP) SWITCH. AX–8
VALVE BODY ASSEMBLY. AX–10
DIFFERENTIAL OIL SEAL. AX–14
SHIFT LOCK SYSTEM. AX–15
FLOOR SHIFT ASSEMBLY. AX–17
AUTOMATIC TRANSAXLE UNIT. AX–30
TORQUE CONVERTER CLUTCH AND DRIVE PLATE. AX-36

AX

AUTOMATIC TRANSAXLE SYSTEM

AX042-01

PRECAUTION

If the vehicle is equipped with a mobile communication system, refer to the precautions in the IN section.

AX0CM-02

OPERATION

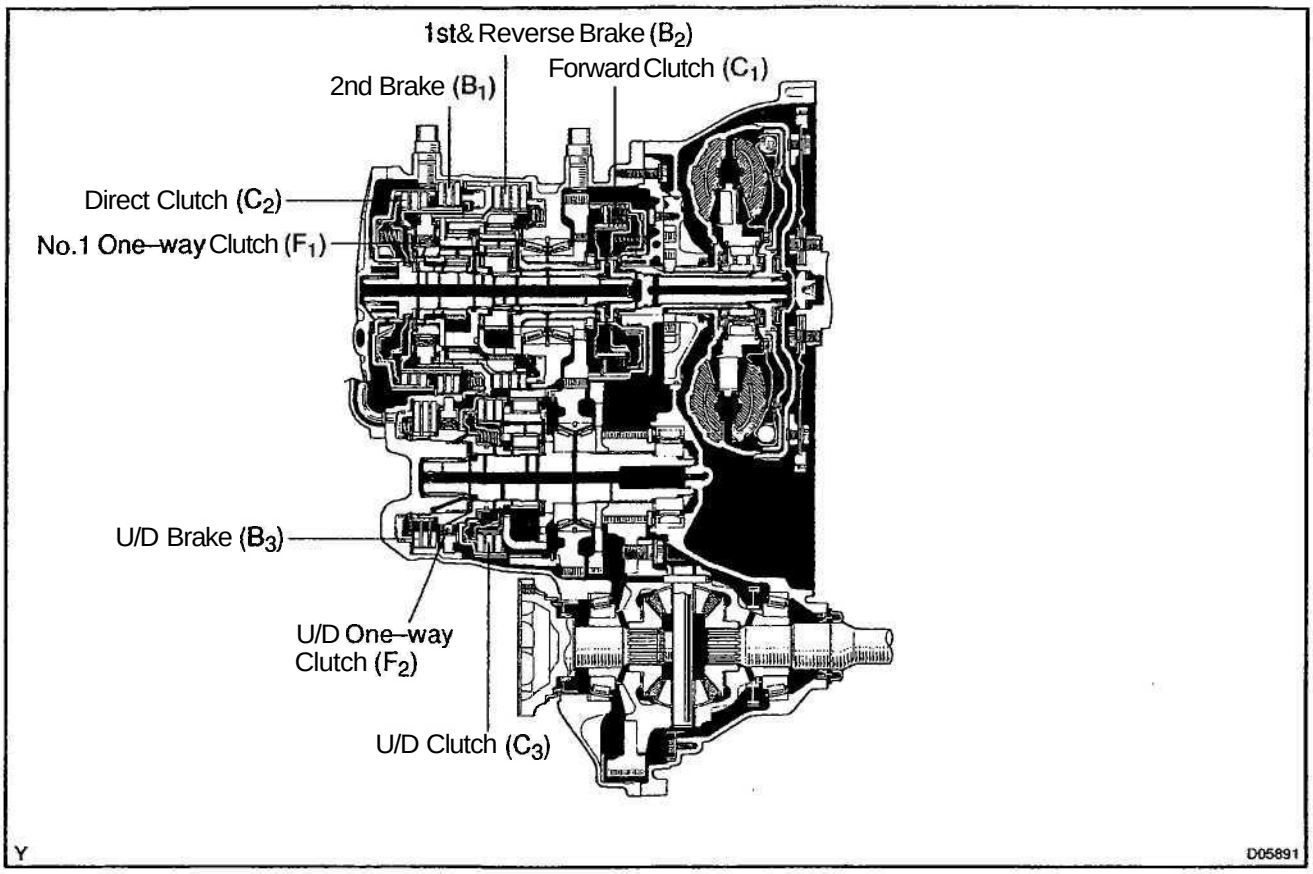

○ ... Operating

Shift lever position	Gear position	C_1	C_2	C_3	B_1	B_2	B_3	F_1	F_2
P	Parking						○		
R	Reverse		○			○	○		
N	Neutral						○		
D	1st	●					○	○	○
	2nd	●			○		○		○
	3rd	○	●				○		○
	0/D	○	○	●					
2	1st	○					●	○	○
	2nd	○			○		○		○
L	1st	○				○	●	○	○

AX

VEHICLE SPEED SENSOR

ON–VEHICLE REPAIR

AX08T-03

1. REMOVE BATTERY
2. REMOVE ECM AND ECM CASE
3. REMOVE ECM BRACKET

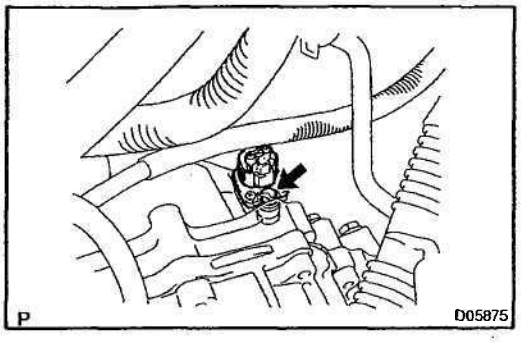

4. DISCONNECT VEHICLE SPEED SENSOR CONNECTOR
5. REMOVE VEHICLE SPEED SENSOR ASSEMBLY

(a) Remove the bolt and vehicle speed sensor assembly.
(b) Remove the clip and speedometer driven gear from the vehicle speed sensor.
(c) Remove the O–ring from the vehicle speed sensor.

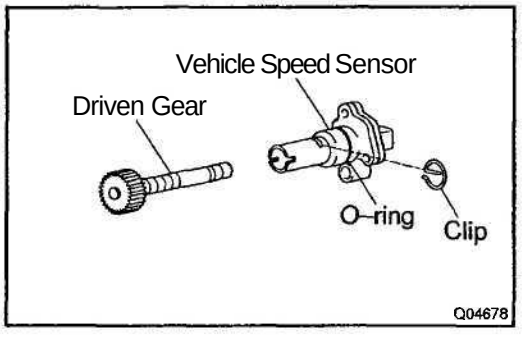

6. INSTALL VEHICLE SPEED SENSOR ASSEMBLY

(a) Coat a new O–ring with ATF and install it to the vehicle speed sensor.
(b) Install the speedometer driven gear to the vehicle speed sensor with clip.
(c) Install the vehicle speed sensor assembly with the bolt.
Torque: 5.5 N·m (56 kgf·cm, 49 in.·lbf)

7. CONNECT VEHICLE SPEED SENSOR CONNECTOR
8. INSTALL ECM BRACKET
Torque:
Bolt: 18 N·m (185 kgf·cm, 13 ft·lbf)
Nut: 12 N·m (120 kgf·cm, 9 ft·lbf)
9. INSTALL ECM AND ECM CASE
Torque: 6.9 N·m (70 kgf·cm, 61 in.·lbf)
10. INSTALL BATTERY

AX

SPEED SENSOR

AX09L-02

ON-VEHICLE REPAIR

1. **REMOVE BATTERY**
2. **REMOVE ECM AND ECM CASE**
3. **REMOVE ECM BRACKET**

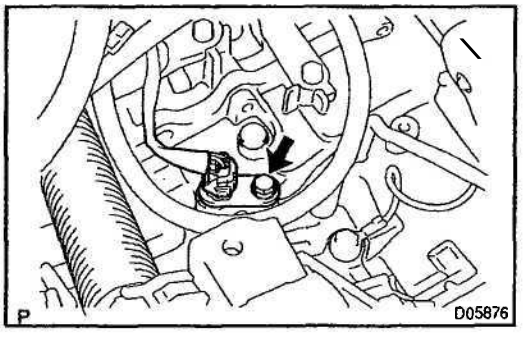

4. **DISCONNECT INPUT TURBINE SPEED SENSOR CONNECTOR**
5. **REMOVE INPUT TURBINE SPEED SENSOR**

(a) Remove the bolt and input turbine speed sensor.

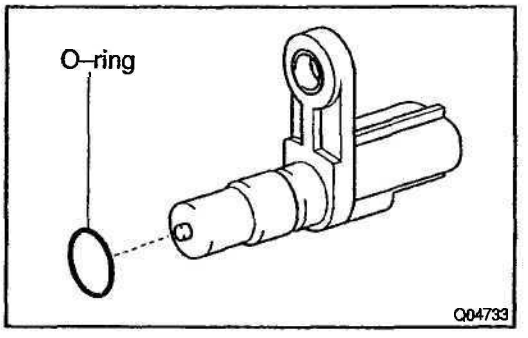

(b) Remove the O-ring from the input turbine speed sensor.

6. **INSTALL INPUT TURBINE SPEED SENSOR**

(a) Coat a new O-ring with ATF and install it to the input turbine speed sensor.

(b) Install the input turbine speed sensor with the bolt.
Torque: 11 N·m (115 kgf·cm, 8 ft·lbf)

7. **CONNECT INPUT TURBINE SPEED SENSOR CONNECTOR**

AX

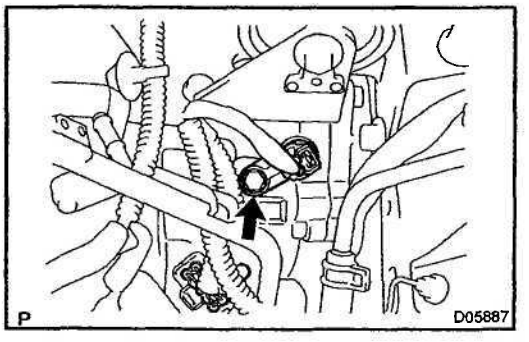

8. **DISCONNECT COUNTER GEAR SPEED SENSOR CONNECTOR**
9. **REMOVE COUNTER GEAR SPEED SENSOR**

(a) Remove the bolt and counter gear speed sensor.

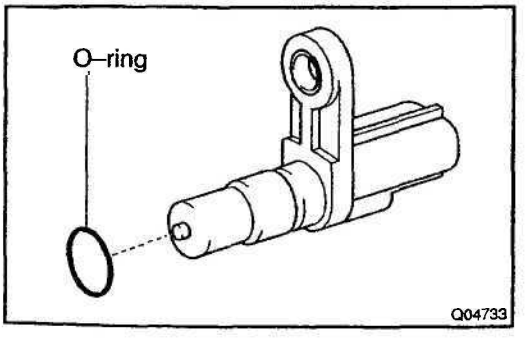

(b) Remove the O-ring from the counter gear speed sensor.

10. **INSTALL COUNTER GEAR SPEED SENSOR**

(a) Coat a new O-ring with ATF and install it to the counter gear speed sensor.

(b) Install the counter gear speed sensor with the bolt.
Torque: 11 N·m (115 kgf·cm, 8 ft·lbf)

11. **CONNECT COUNTER GEAR SPEED SENSOR CONNECTOR**

12. INSTALL ECM BRACKET
    Torque:
    Bolt: 18 N·m (185 kgf·cm, 13 ft·lbf)
    Nut: 12 N·m (120 kgf·cm, 9 ft·lbf)
13. INSTALL ECM AND ECM CASE
    Torque: 6.9 N·m (70 kgf·cm, 61 in.·lbf)
14. INSTALL BATTERY

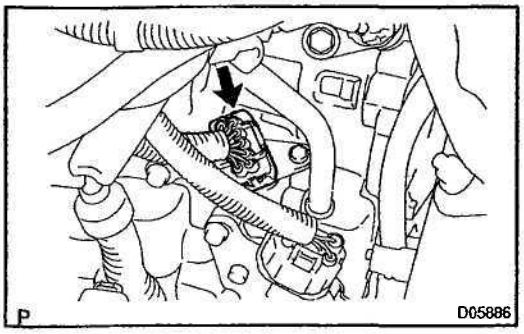

ATF TEMPERATURE SENSOR

AX0KJ-01

ON–VEHICLE REPAIR

1. DISCONNECT SOLENOID CONNECTOR

2. REMOVE LH ENGINE UNDER COVER

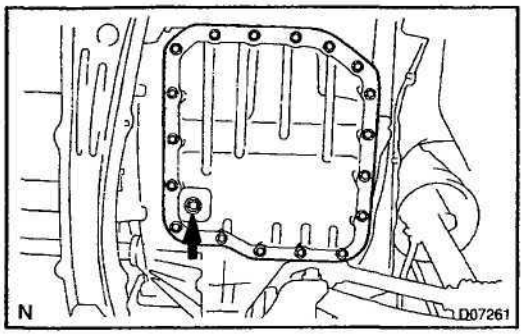

3. REMOVE DRAIN PLUG AND DRAIN ATF

4. REMOVE OIL PAN AND GASKET

NOTICE:

Some fluid will remain in the oil pan.

Remove the 18 bolts, and carefully remove the oil pan assembly. Discard the gasket.

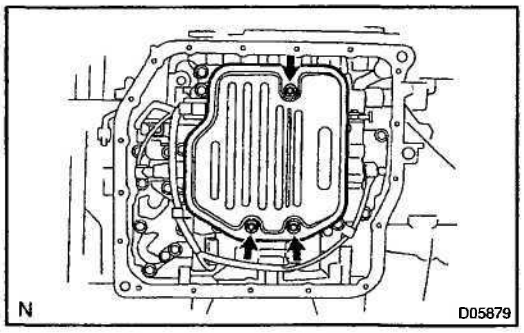

5. REMOVE OIL STRAINER

(a) Remove the 3 bolts and oil strainer.

(b) Remove the O–ring.

AX

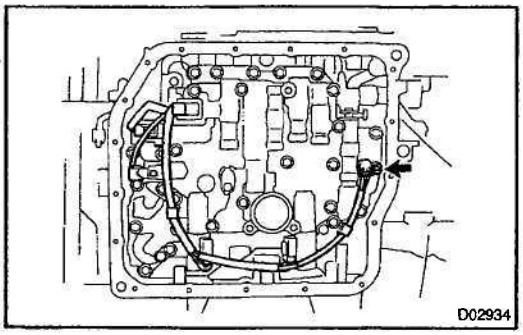

6. DISCONNECT 5 SHIFT SOLENOID VALVE CONNECTORS

7. REMOVE ATF TEMPERATURE SENSOR

Remove the bolt and lock plate, and remove the ATF temperature sensor.

8. SEPARATE WIRE HARNESS FROM 2 CLAMPS

9. CLAMP WIRE HARNESS TO 2 CLAMPS

10. INSTALL ATF TEMPERATURE SENSOR

Install the ATF temperature sensor with the lock plate and bolt.

Torque: 6.6 N·m (67 kgf·cm, 58 in.·lbf)

11. CONNECT 5 SHIFT SOLENOID VALVE CONNECTORS

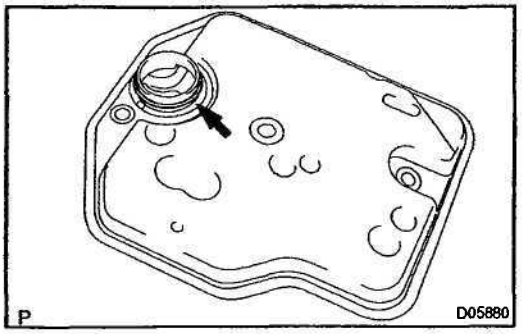

12. INSTALL OIL STRAINER

(a) Coat a new O–ring with ATF.

(b) Install the O–ring to the oil strainer.

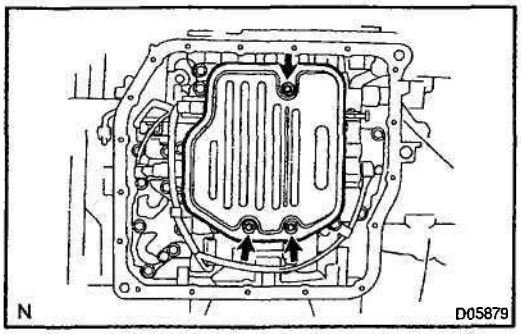

(c) Install the oil strainer with the 3 bolts.

Torque: 11 N·m (110 kgf·cm, 8 ft·lbf)

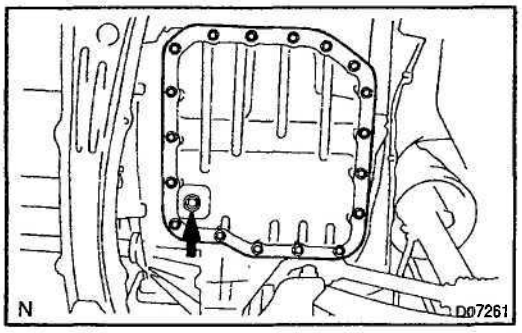

13. INSTALL OIL PAN

Install the oil pan and a new gasket with the 18 bolts.

Torque: 7.8 N·m (80 kgf·cm, 69 in.·lbf)

14. INSTALL DRAIN PLUG

Install a new gasket and drain plug.

Torque: 49 N·m (500 kgf·cm, 36 ft·lbf)

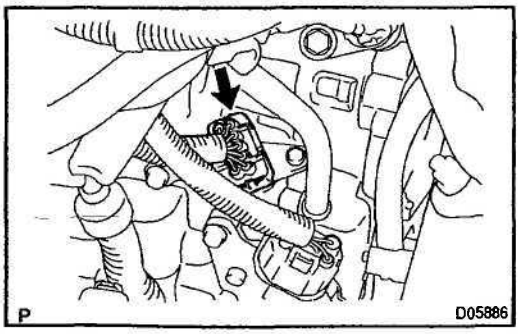

15. CONNECT SOLENOID CONNECTOR

16. FILL ATF AND CHECK ATF LEVEL

(See page DM57)

17. INSTALL LH ENGINE UNDER COVER

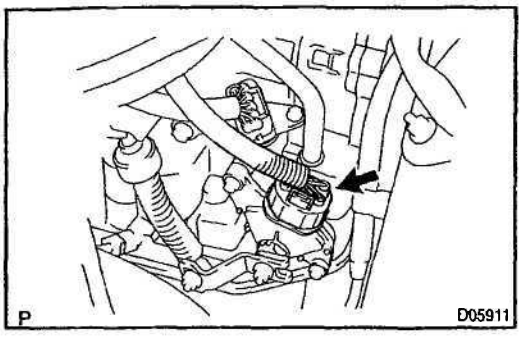

PARK/NEUTRAL POSITION (PNP) SWITCH

ON–VEHICLEREPAIR

AX0KJ–02

1. REMOVE AIR CLEANER ASSEMBLY

2. DISCONNECT PARK/NEUTRAL POSITION SWITCH CONNECTOR

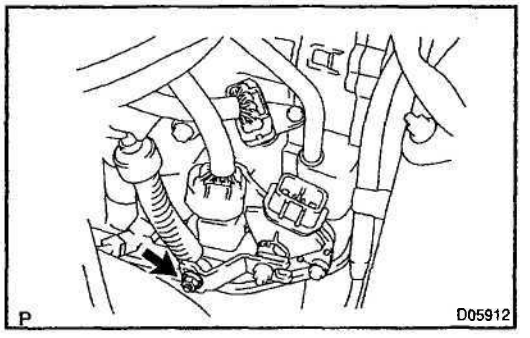

3. REMOVE PARK/NEUTRAL POSITION SWITCH

(a) Remove the nut.

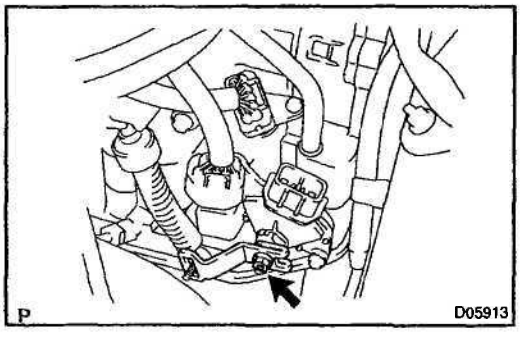

(b) Remove the nut, washer and control shift lever.

AX

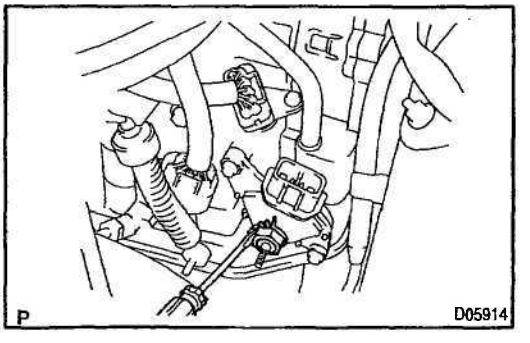

(c) Using a screwdriver, pry off the lock plate.

(d) Remove the nut and lock plate.

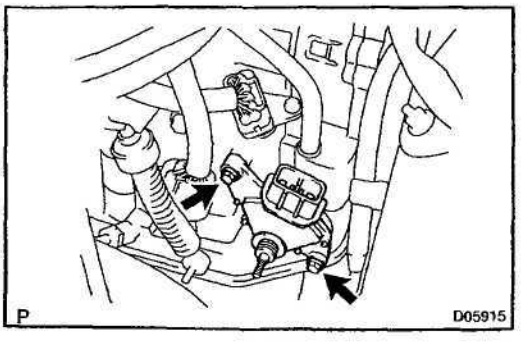

(e) Remove the 2 bolts and pull out the park/neutral position switch.

4. INSTALL AND ADJUST PARK/NEUTRAL POSITION SWITCH

(a) Install the park/neutral position switch with the 2 bolts.
Torque: 5.4 N·m (55 kgf·cm, 48 in.·lbf)

(b) Install a new lock plate and nut.
Torque: 6.9 N·m (70 kgf-cm, 61 in.·lbf)

(c) Bend the claws on the lock plate to fix the nut.

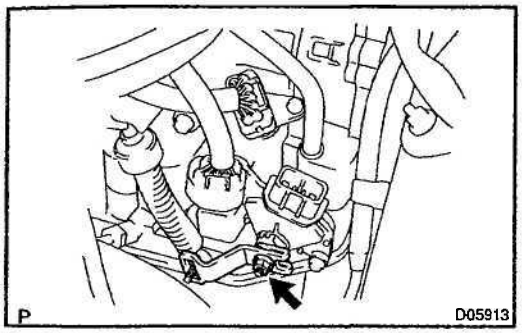

(d) Install the control shift lever with the nut.
Torque: 13 N·m (130 kgf cm, 9 ft·lbf)

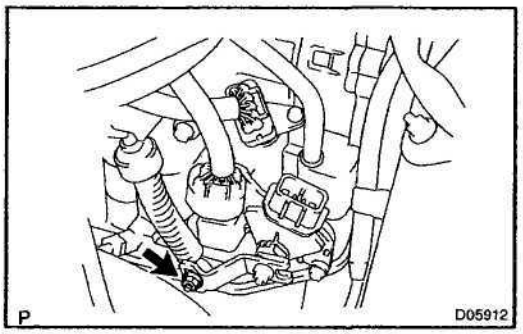

(e) Connect the control cable to the control shaft.
Torque: 12 N·m (120 kgf·cm, 9 ft·lbf)

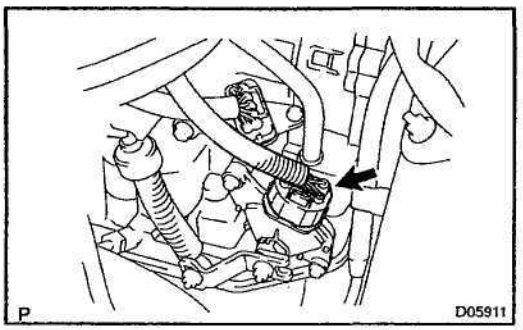

5. CONNECT PARK/NEUTRAL POSITION SWITCH CONNECTOR

6. CHECK PARK/NEUTRAL POSITION OPERATION

Check that the engine can be started with the shift lever only in the N or P position, but not in other position.

If the engine can not be stated not as started above, carry out the adjustment procedure (See page DI–157).

7. **INSTALL AIR CLEANER ASSEMBLY**

8. TEST DRIVE VEHICLE

AX

VALVE BODY ASSEMBLY

AX0KN–01

ON–VEHICLEREPAIR

1. REMOVE LH ENGINE UNDER COVER

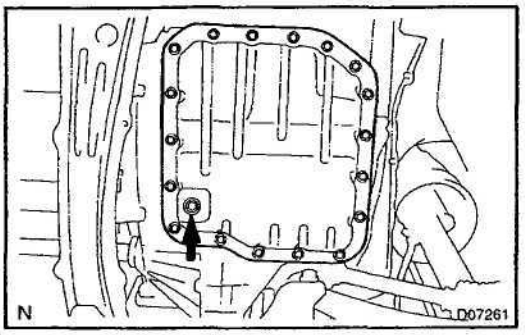

2. REMOVE DRAIN PLUG AND DRAIN ATF

3. REMOVE OIL PAN AND GASKET

NOTICE:

Some fluid will remain in the oil pan.

Remove the 18 bolts, and carefully remove the oil pan assembly. Discard the gasket.

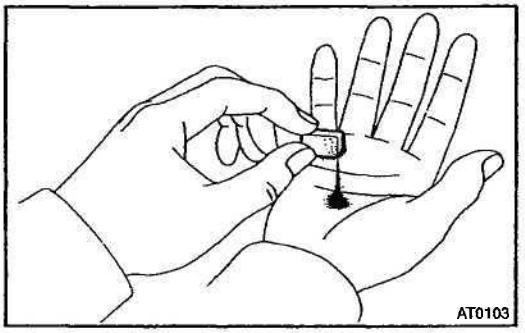

4. EXAMINE PARTICLES IN OIL PAN

Remove the magnets and use them to collect any steel chips. Look carefully at the chips and particles in the pan and on the magnet to anticipate what type of wear you will find in the transaxle.

Steel (magnetic)...bearing, gear and plate wear

Brass (non–magnetic)... bushing wear

AX

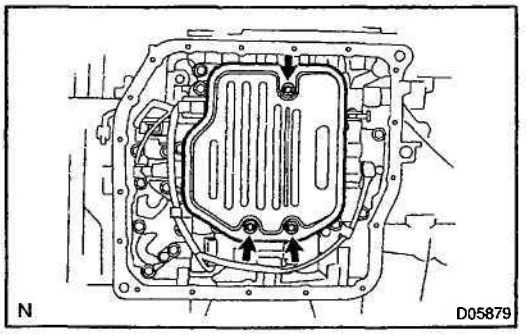

5. REMOVE OIL STRAINER

(a) Remove the 3 bolts and oil strainer.

(b) Remove the O–ring.

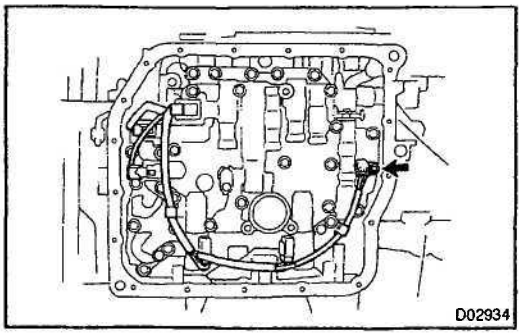

6. DISCONNECT 5 SHIFT SOLENOID VALVE CONNECTORS

7. REMOVE ATF TEMPERATURE SENSOR

Remove the bolt and lock plate, and remove the ATF temperature sensor.

8. SEPARATE WIRE HARNESS FROM 2 CLAMPS

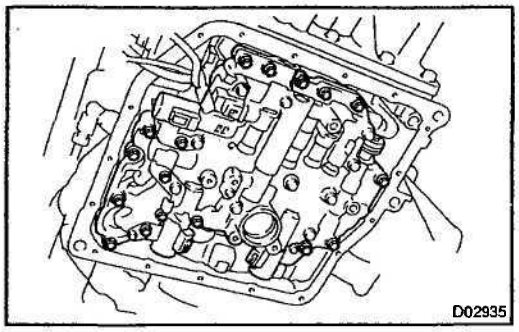

9. REMOVE VALVE BODY

Remove the 17 bolts and valve body.

NOTICE:

Be careful not to drop the check valve body, spring and accumulator piston.

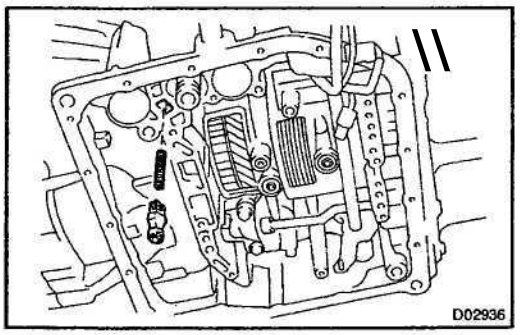

10. REMOVE CHECK BALL BODY AND SPRING

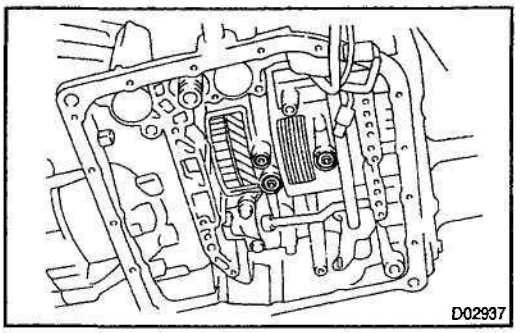

11. REMOVE 3 APPLY GASKETS

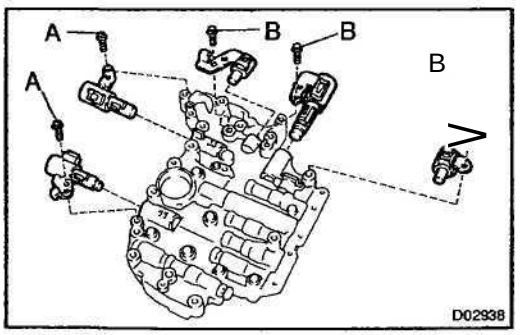

12. REMOVE SHIFT SOLENOID VALVE

Remove the 5 bolts and 5 shift solenoid valves.

13. INSTALL SHIFT SOLENOID VALVE

Install the 5 shift solenoid valves with the 5 bolts.

Torque:

Bolt A: 6.6 N·m (67 kgf·cm, 58 in.·lbf)

Bolt B: 11 N·m (110 kgf cm, 8 ft·lbf)

Bolt length:

Bolt A: 12 mm (0.47 in.)

Bolt B: 45 mm (1.77 in.)

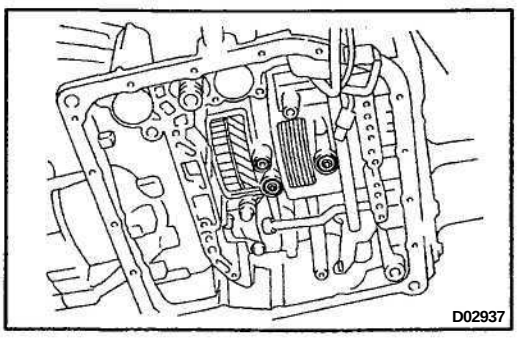

14. INSTALL APPLY GASKET

(a) Coat 3 new apply gaskets with ATF.

(b) Install the gaskets to the transaxle case.

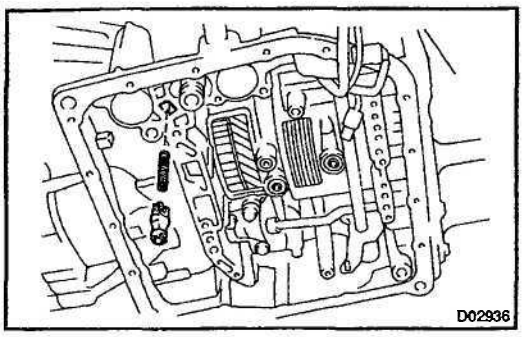

15. INSTALL CHECK VALVE AND SPRING

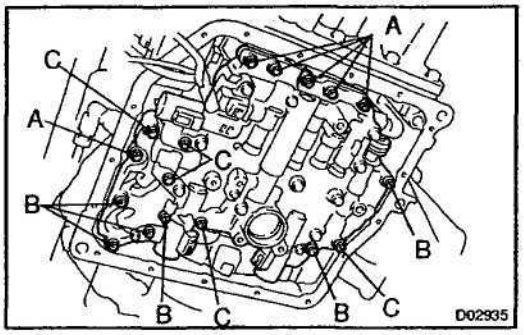

16. INSTALL VALVE BODY

(a) Align the groove of the manual valve with the pin of the manual valve lever.

(b) Temporarily install the valve body with the 17 bolts.

Bolt length:
Bolt A: 25 mm (0.98 in.)
Bolt B: 41 mm (1.61 in.)
Bolt C: 45 mm (1.77 in.)

(c) Check that the manual valve lever contacts the center of the roller at the tip of the detent spring.

(d) Tighten the 17 bolts.

Torque: 11 N·m (110 kgf·cm, 8 ft·lbf)

17. CLAMP WIRE HARNESS TO 2 CLAMPS

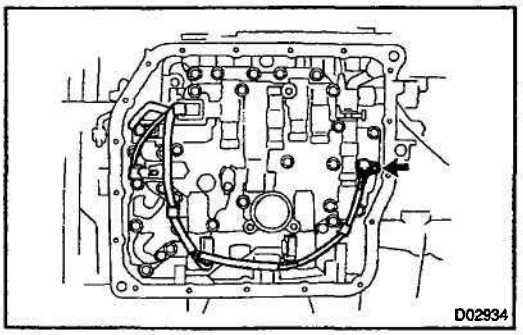

18. INSTALL ATF TEMPERATURE SENSOR

Install the ATF temperature sensor with the lock plate and bolt.

Torque: 6.6 N·m (67 kgf·cm, 58 in.·lbf)

19. CONNECT 5 SHIFT SOLENOID VALVE CONNECTORS

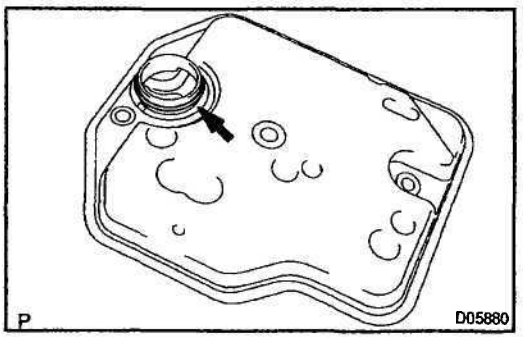

20. INSTALL OIL STRAINER

(a) Coat a new O–ring with ATF.

(b) Install the O–ring to the oil strainer.

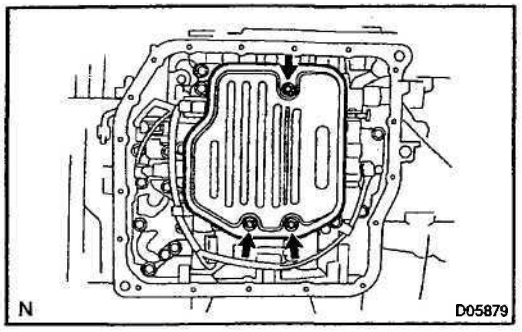

(c) Install the oil strainer with the 3 bolts.
Torque: 11 N·m (110 kgf·cm, 8 ft·lbf)

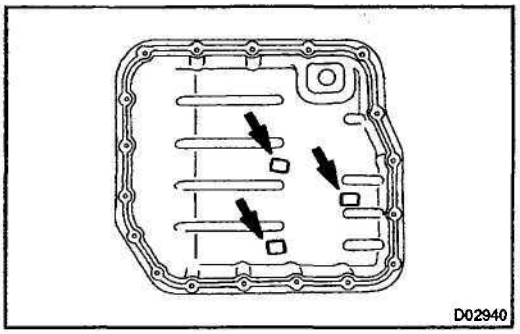

21. INSTALL MAGNET IN OIL PAN
Install the 3 magnets in the oil pan, as shown in the illustration.

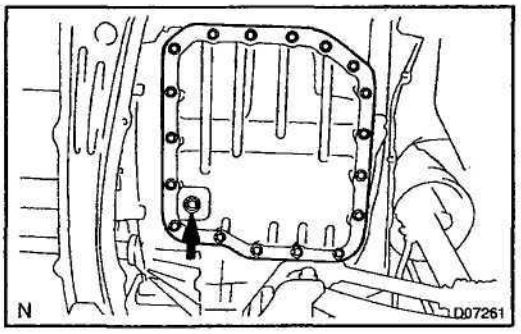

22. INSTALL OIL PAN
Install the oil pan and a new gasket with the 18 bolts.
Torque: 7.8 N·m (80 kgf·cm, 69 in.·lbf)

23. INSTALL DRAIN PLUG
Install a new gasket and drain plug.
Torque: 49 N·m (500 kgf·cm, 36 ft·lbf)

24. FILL ATF AND CHECK ATF LEVEL
(See page DM57)

25. INSTALL LH ENGINE UNDER COVER

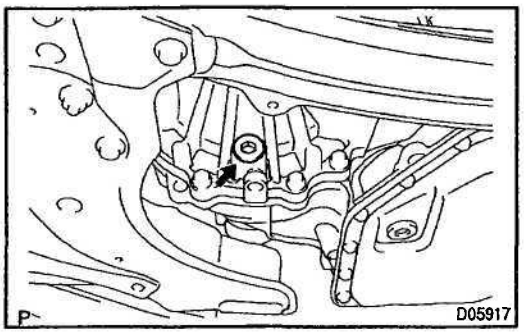

DIFFERENTIAL OIL SEAL

ON–VEHICLE REPAIR

AM5M–02

1. DRAIN ATF FROM FRONT DIFFERENTIAL CASE

2. REMOVE LH AND RH DRIVE SHAFTS

(See page SA–20)

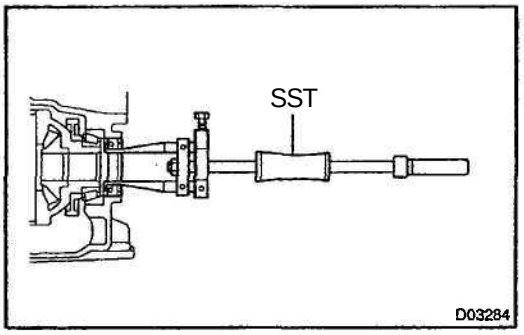

3. REMOVE LH AND RH SIDE OIL SEAL

Using SST, drive out both the side oil seals.

SST 09308–10010

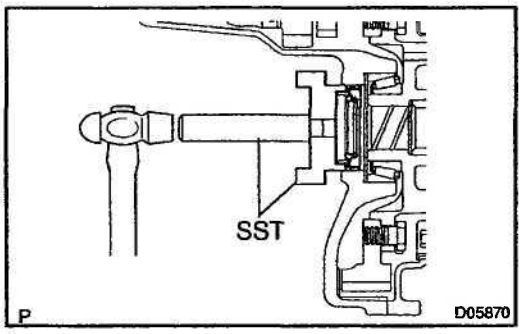

4. **INSTALL LH SIDE OIL SEAL**

(a) Using SST and a hammer, drive in a new oil seal.

SST 09350–32014 (09351–32150), 09950–70010 (09951–07150)

Oil seal drive in depth: 2.7 ± 0.5 mm (0.106 ± 0.020 in.)

(b) Coat the oil seal lip with MP grease.

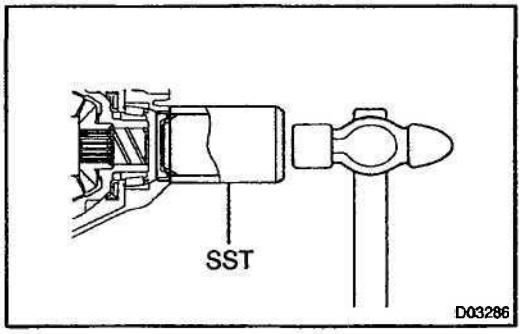

5. **INSTALL RH SIDE OIL SEAL**

(a) Using SST and a hammer, drive in a new oil seal.

SST 09223–00010

Oil seal drive in depth: 0 ± 0.5 mm (0 ± 0.020 in.)

(b) Coat the oil seal lip with MP grease.

6. INSTALL LH AND RH DRIVE SHAFTS

(See page SA–32)

7. **FILL ATF AND CHECK ATF LEVEL**

(See page DI–157)

SHIFT LOCK SYSTEM

COMPONENTS

AXDKL–01

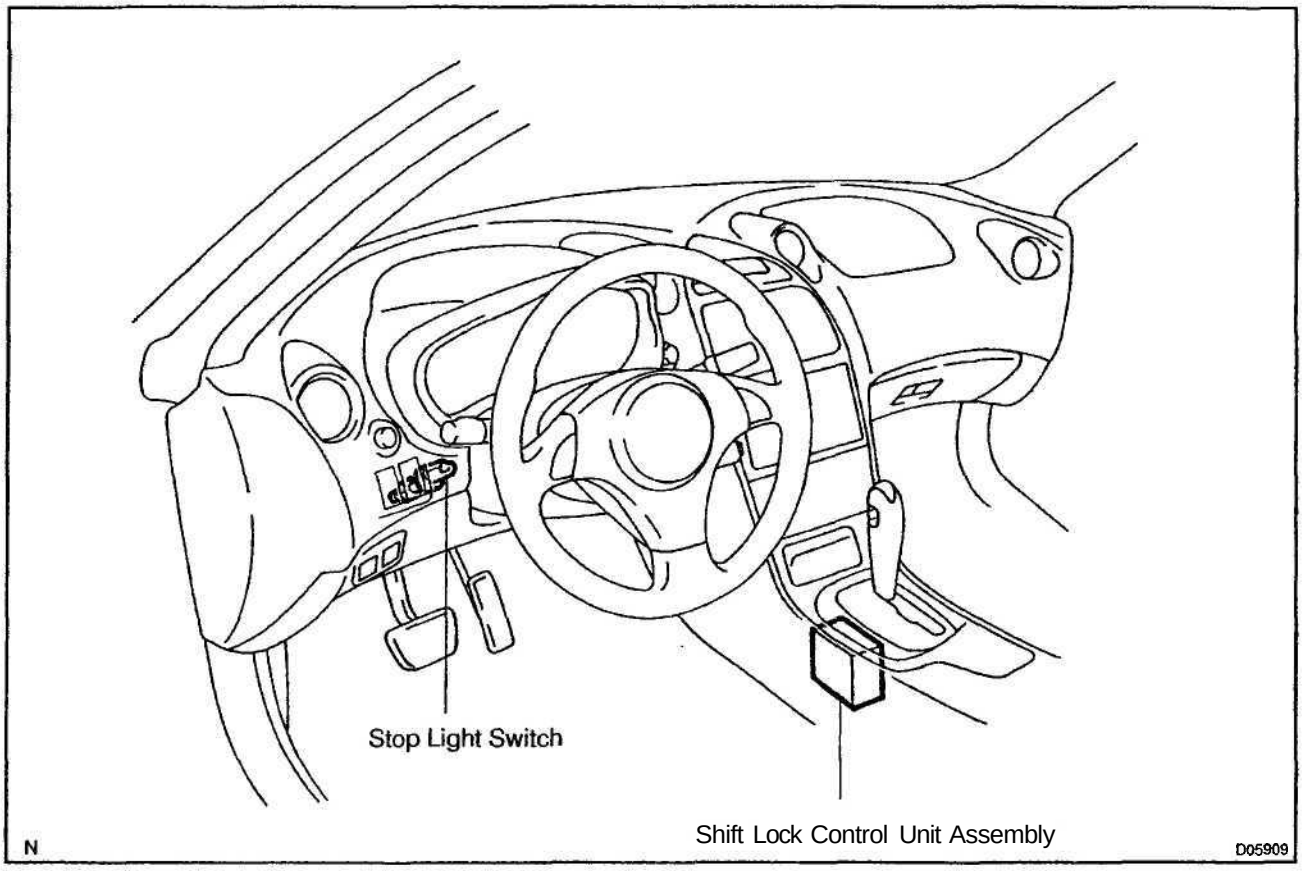

AX0K34-01

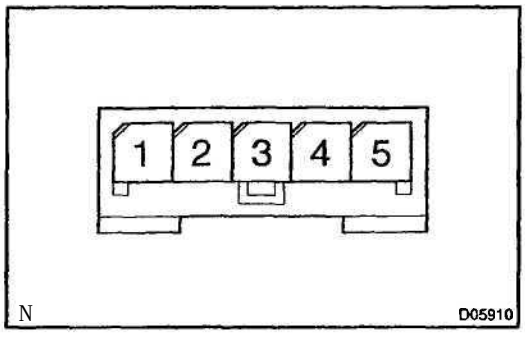

INSPECTION

INSPECT SHIFT LOCK CONTROL UNIT ASSEMBLY

Using a voltmeter, measure the voltage at each terminal.

HINT:

Do not disconnect the shift lock control unit assembly connector.

Terminal	Measuring Condition	Voltage (V)
5-1 (IG – E)	Ignition switch ON	10-14
3 – 1 (STP – E)	Depressing brake pedal	10-14

FLOOR SHIFT ASSEMBLY

AX0L5-01

COMPONENTS

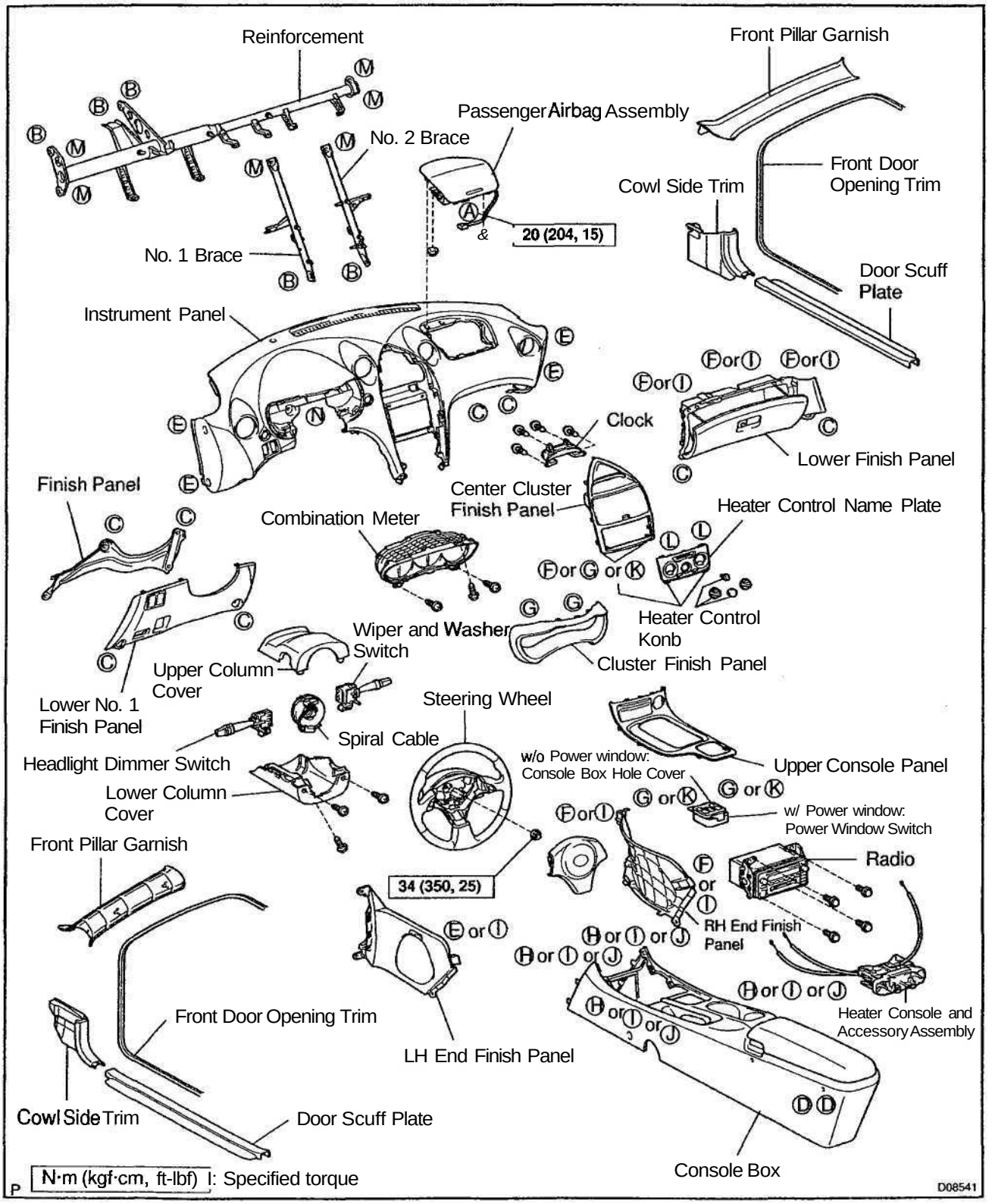

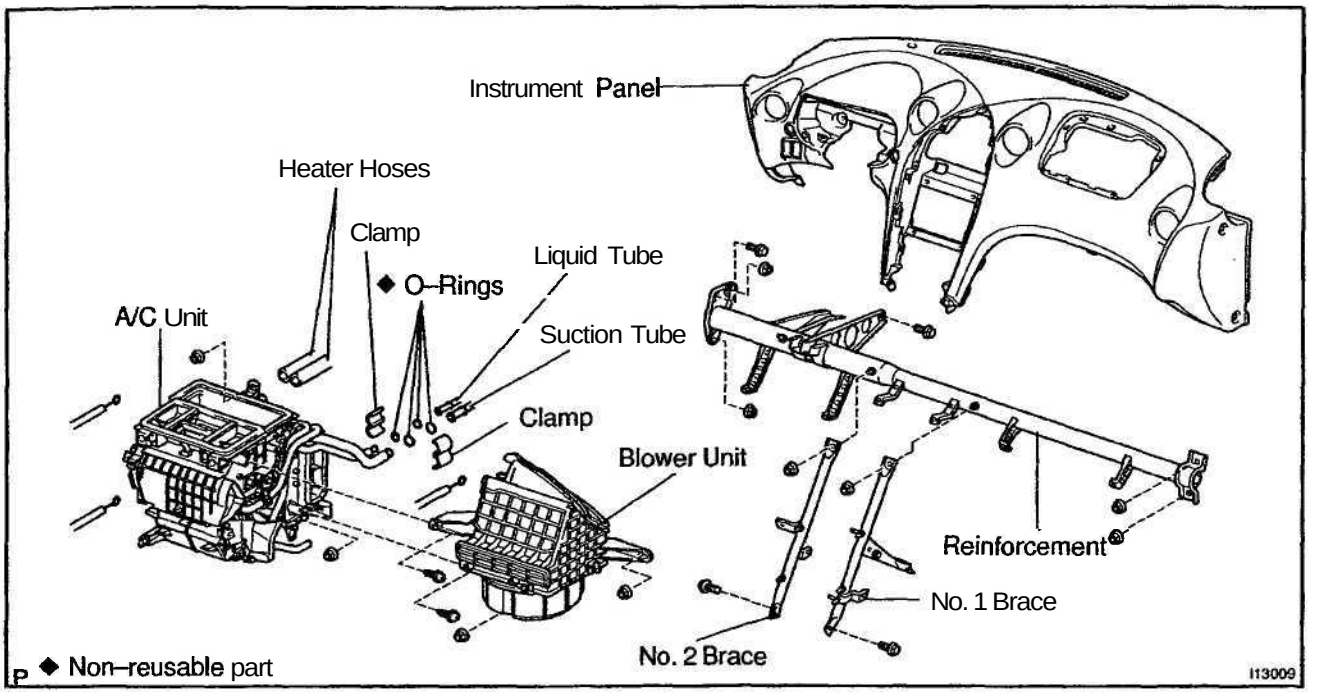
Instrument Panel
Heater Hoses
Clamp
◆ O–Rings
Liquid Tube
A/C Unit
Suction Tube
Clamp
Blower Unit
Reinforcement
No. 1 Brace
No. 2 Brace
P ◆ Non–reusable part
I13009

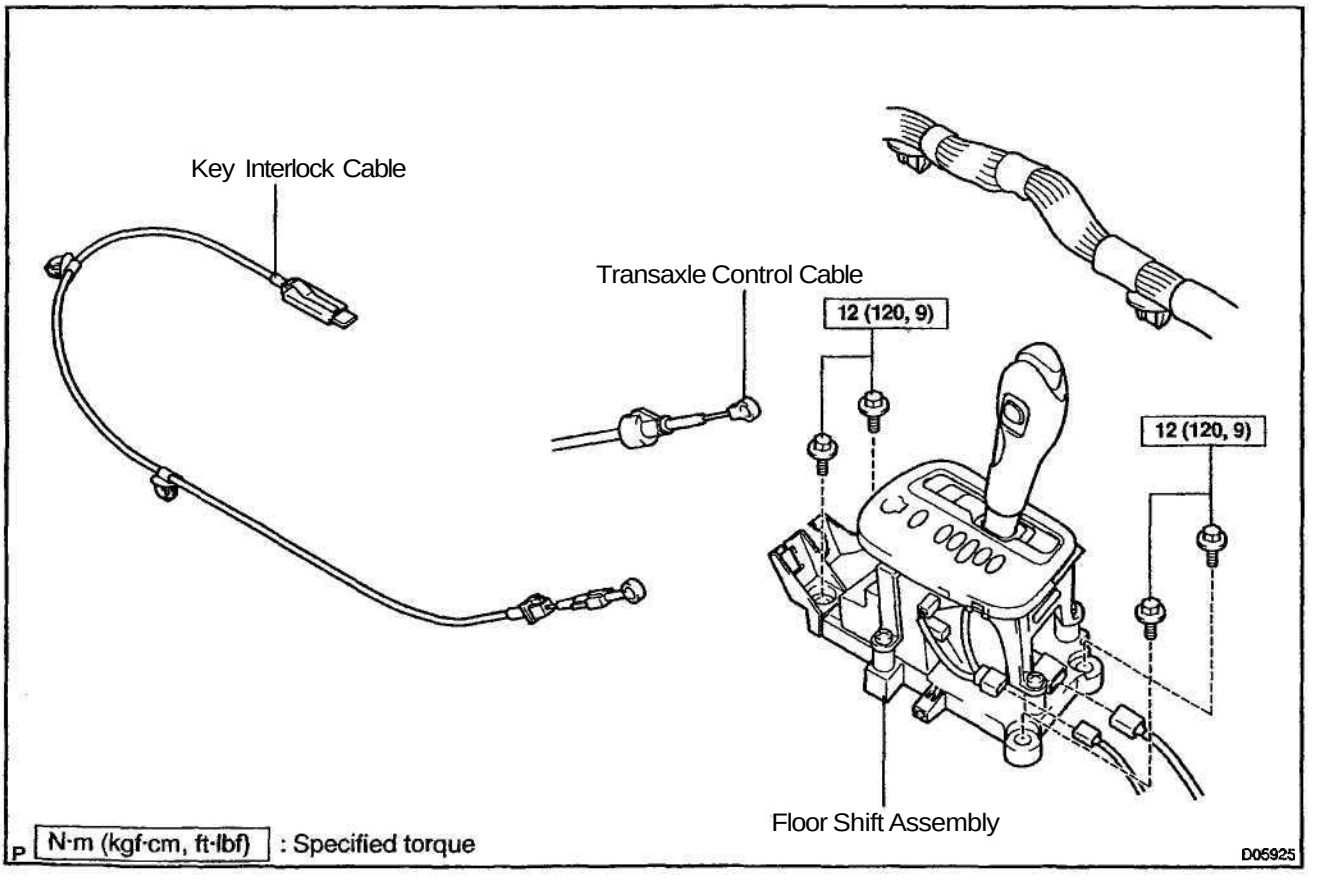
Key Interlock Cable
Transaxle Control Cable
12 (120, 9)
12 (120, 9)
Floor Shift Assembly
P N·m (kgf·cm, ft·lbf) : Specified torque
D05925

HINT:
Screw shapes and sizes are indicated in the table below. The codes ("A" - "N") correspond to those indicated on the previous page.

mm (in.)

	Shape	Size		Shape	Size		Shape	Size
®	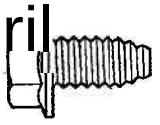	0 = 8 (0.32) L - 16 (0.63)	®	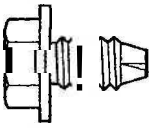	0 = 8 (0.32) L - 15 (0.59)	©	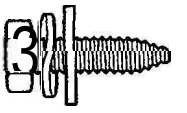	ø = 6 (0.24) L - 22 (0.87)
©	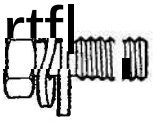	0 = 6 (0.24) L - 16 (0.63)	©	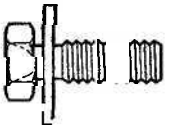	0 = 6 (0.24) L - 18 (0.71)	©		0 = 5.22 (0.2055) L - 16 (0.63)
■		0 =5.22 (0.2055) L=16 (0.63)	—		0 = 5 (0.20) L=18 (0.71)	O		0 = 5 (0.20) L=16 (0.63)
Ⓙ		0 = 5 (0.20) L=16 (0.63)	®	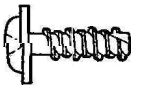	0 = 5 (0.20) L=14 (0.55)	Ⓛ	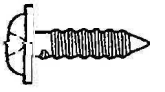	0 = 4 (0.16) L=16 (0.63)
®		0 = 8 (0 32)	Ⓝ	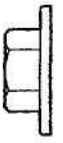	0 = 6 (0.24)			

P

H12659

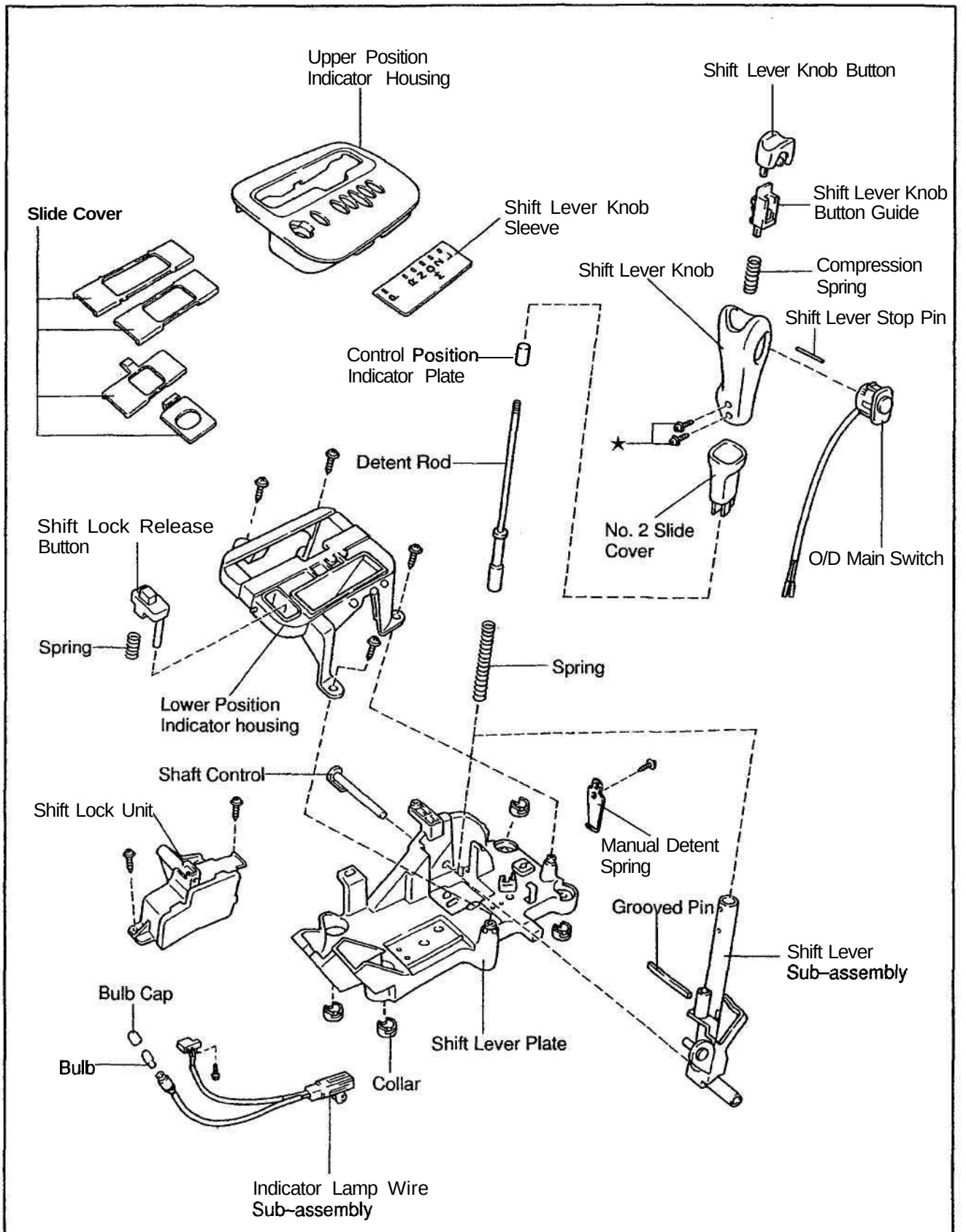

N * Precoated part

D07820

REMOVAL

1. REMOVE INSTRUMENT PANEL (See page BO–79)
2. REMOVE AIR CONDITIONING UNIT (See page AC–26)

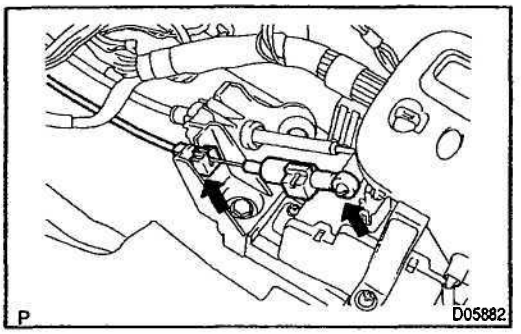

3. REMOVE KEY INTERLOCK CABLE

(a) Remove the cable end from the rod of the floor shift assembly.

(b) Pull out the cable while pressing the clip of the key interlock cable.

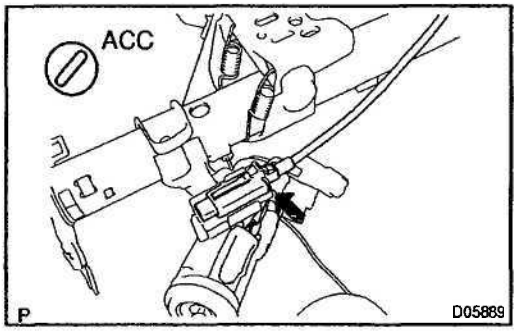

(c) With the key in ACC, remove the cable cap claw from the key interlock and pull it.

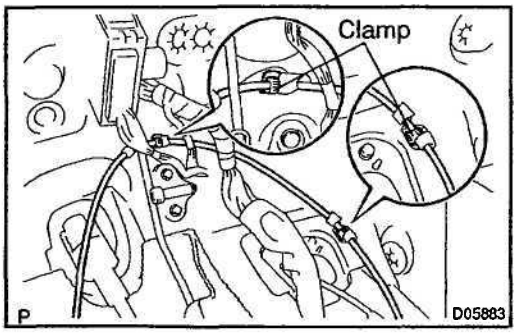

(d) Disconnect the 2 key interlock cable clamps.

4. REMOVE FLOOR SHIFT ASSEMBLY

(a) Disconnect the 2 connectors.

(b) Disconnect the 2 wire harness clamps from the floor shift assembly.

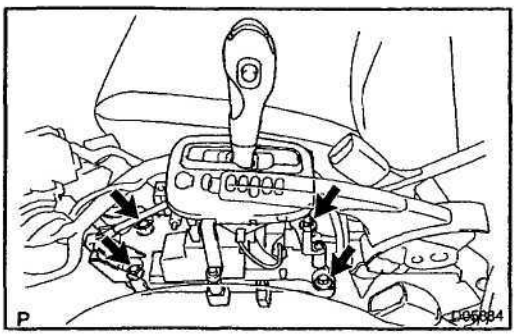

(c) Remove the 4 bolts from the floor shift assembly.

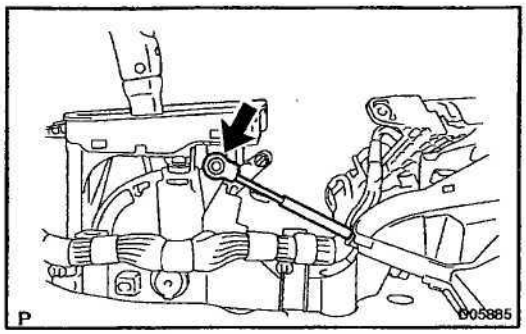

(d) Remove the cable end from the rod of the floor shift assembly.
(e) Pull out the cable while pressing the clip of the transaxle control cable.
(f) Remove the floor shift assembly.

AX0L8-01

DISASSEMBLY

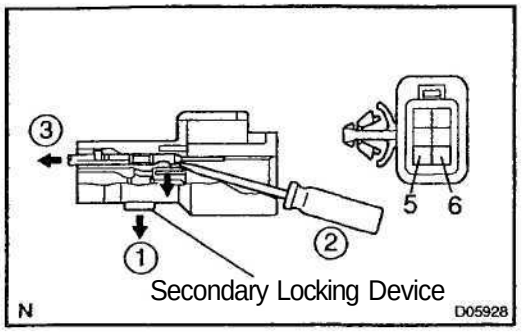

1. REMOVE O/D MAIN SWITCH TERMINAL

(a) Remove the O/D main switch connector from the shift lever plate.
(b) Disengage the secondary locking device.
(c) Release the locking log of the terminals 5 and 6, and pull the terminals out from the rearward.

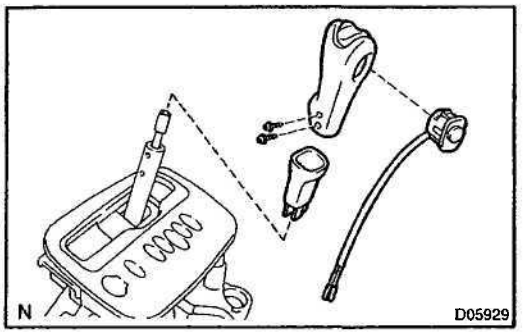

2. REMOVE SHIFT LEVER KNOB SUB–ASSEMBLY

(a) Remove the 2 screws and shift lever knob sub–assembly.

NOTICE:

Pay attention not to apply unnatural load to O/D main switch wire harness.

(b) Remove the O/D main switch.
(c) Remove the No. 2 slide cover.

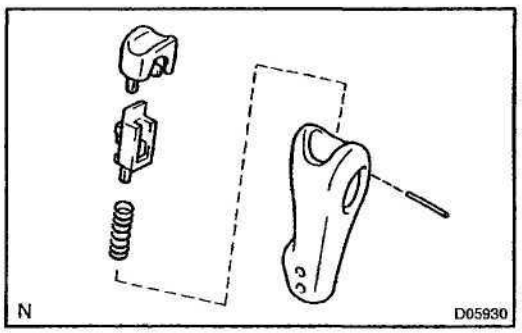

(d) Remove the shift lever stop pin, shift lever knob button, shift lever knob button guide and compression spring.

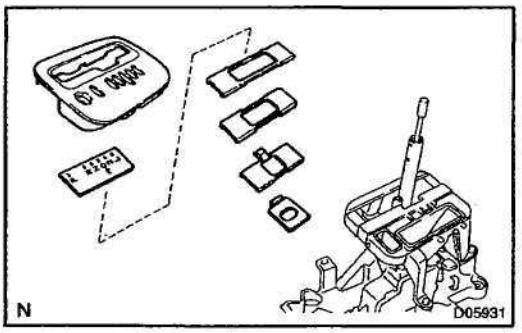

3. REMOVE UPPER POSITION INDICATOR HOUSING

(a) Remove the upper position indicator housing.
(b) Remove the control position indicator plate.
(c) Remove the 4 slide covers from the lower position indicator housing.

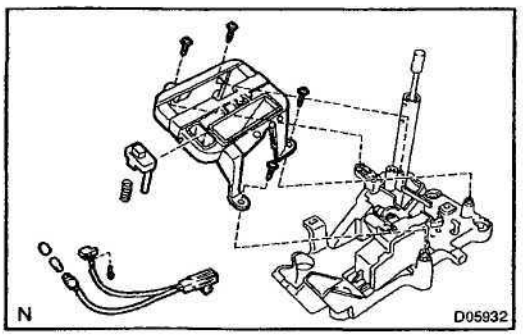

4. REMOVE LOWER POSITION INDICATOR HOUSING

(a) Remove the indicator lamp wire sub–assembly.
(b) Remove the 4 screws and lower position indicator housing.
(c) Remove the bulb cap and bulb from the indicator lamp wire sub–assembly.
(d) Remove the screw and indicator lamp wire sub–assembly.
(e) Remove the shift lock release button and spring.

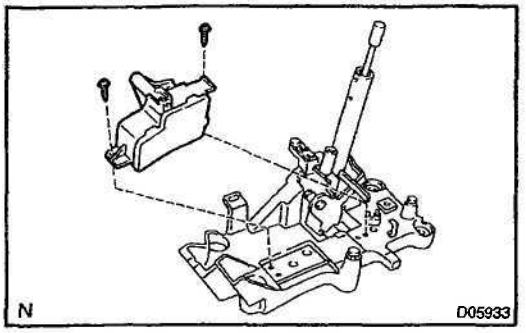

5. REMOVE SHIFT LOCK UNIT

Remove the 2 screws and shift lock unit.

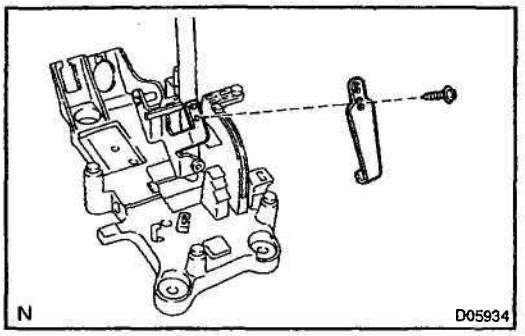

6. REMOVE SCREW AND MANUAL DETENT SPRING

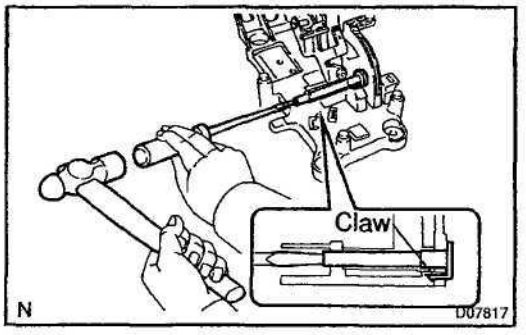

7. REMOVE SHIFT LEVER SUB–ASSEMBLY

Using a screwdriver and hammer, drive off the shaft control while disengaging the claw of the shaft control and remove the shift lever sub–assembly.

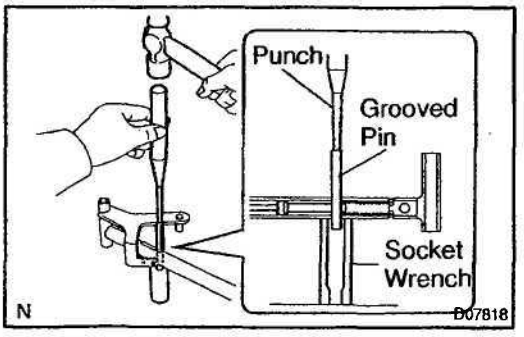

8. REMOVE DETENT ROD

(a) Set a 14 mm deep socket wrench.
(b) Using a punch and hammer, remove the grooved pin.
(c) Remove the detent rod and spring.
(d) Remove the shift lever knob sleeve from the detent rod.

9. REMOVE COLLARS

Using a screwdriver and hammer, remove the 4 collars.

REASSEMBLY

1. INSTALL COLLARS

2. INSTALL DETENT ROD

(a) Install the shift lever knob sleeve to the detent rod.

(b) Apply MP grease on the detent rod and spring.

(c) Install the spring and detent rod.

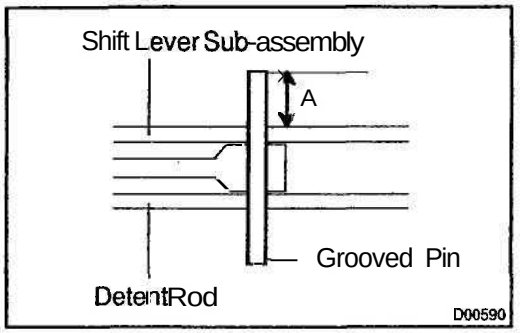

(d) Using a punch and hammer, install the grooved pin to the detent rod pin hole.

A: 8.0 ± 0.2 mm (0.315 ± 0.008 in.)

(e) Check the detent rod operation.

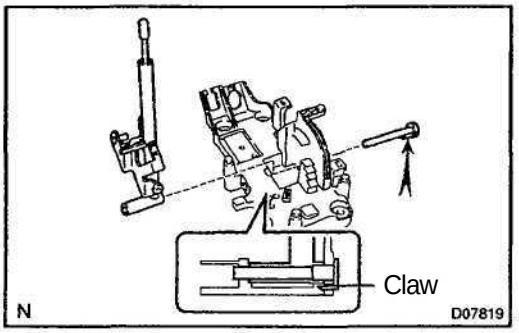

3. INSTALL SHIFT LEVER SUB-ASSEMBLY

(a) Apply MP grease on the spring.

(b) Install the shift lever sub-assembly and shaft control to shift lever plate.

HINT:

Check that the claw of the shaft control is fit onto the shift lever plate.

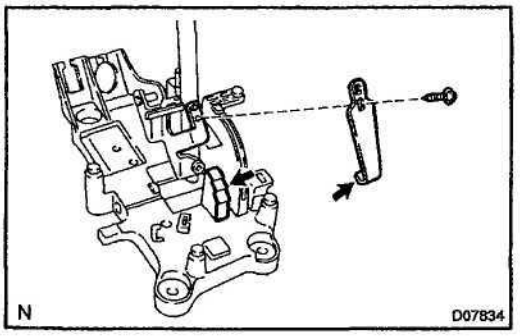

4. INSTALL MANUAL DETENT SPRING AND SCREW

(a) Apply MP grease to the parts indicated by the arrows manual detent spring and shift lever plate in the illustration.

(b) Install the manual detent spring with the screw.

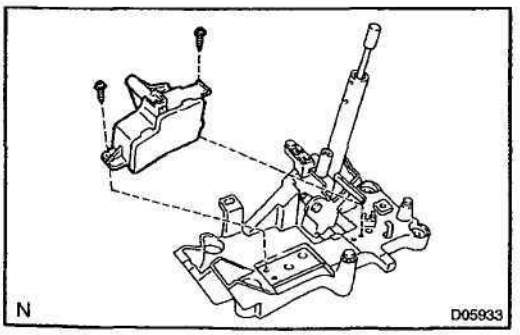

5. INSTALL SHIFT LOCK UNIT

Install the shift lock unit with the 2 screws.

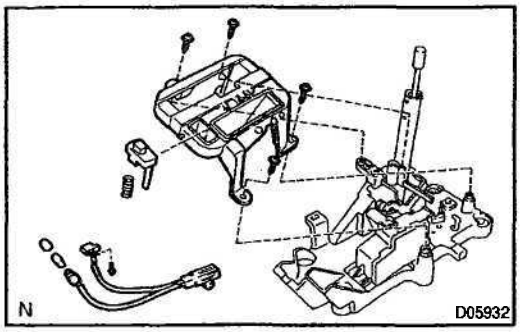

6. INSTALL LOWER POSITION INDICATOR HOUSING

(a) Apply MP grease on the spring.
(b) Install the spring and shift lock release button.
(c) Install the indicator lamp wire sub–assembly with the screw.
(d) Install the bulb and bulb cap to the indicator lamp wire sub–assembly.
(e) Install the lower position indicator housing with the 4 screws.
(f) Install the indicator lamp wire sub–assembly.

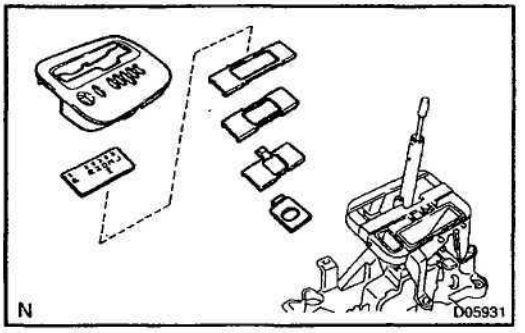

7. INSTALL UPPER POSITION INDICATOR HOUSING

(a) Install the 4 slide covers to the lower position indicator housing, as shown in the illustration.
(b) Install the control position indicator plate.
(c) Install the upper position indicator housing.

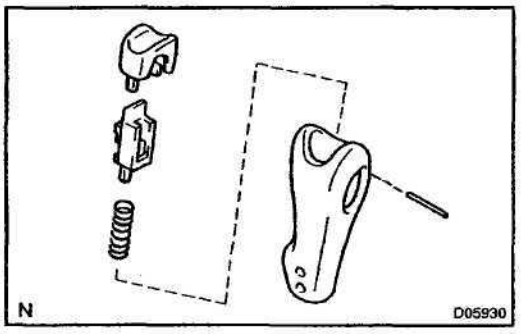

8. INSTALL SHIFT LEVER KNOB SUB–ASSEMBLY

(a) Apply MP grease on the compression spring.
(b) Install the compression spring, shift lever knob button guide, shift lever knob button and shift lever stop pin.

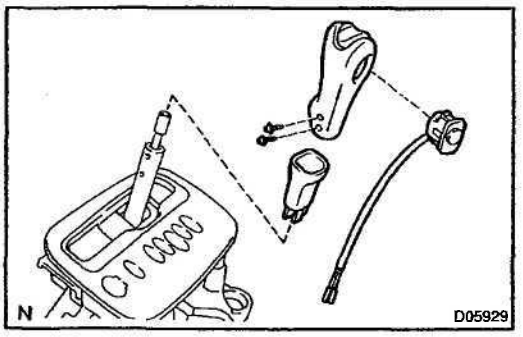

(c) Install the No. 2 slide cover.
(d) Install the O/D main switch.
(e) Install the shift lever knob sub-assembly with the 2 screws.

HINT:
Coat the threads of screws with sealant.
Sealant:
Part No. 08833–00080, THREE BOND 1344, LOCTITE 242 or equivalent

NOTICE:
Make sure not to catch O/D main switch wire harness.

9. INSTALL O/D MAIN SWITCH TERMINAL

(a) Connect the 2 O/D main switch terminals to the connector.
(b) Connect the connector to the shift lever plate.

AX0L7-01

INSTALLATION

1. INSTALL FLOOR SHIFT ASSEMBLY

(a) Pull in the cable while pressing the clip of the transaxle control cable to the floor shift assembly.

(b) Install the cable end from the rod of the floor shift assembly.

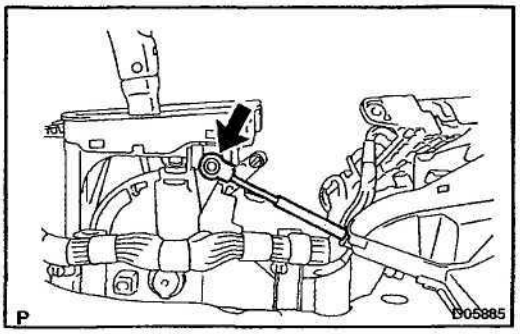

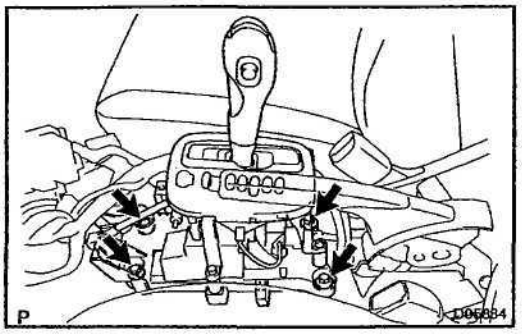

(c) Install the floor shift assembly with the 4 bolts.
Torque: 12 N·m (120 kgf·cm, 9 ft·lbf)

(d) Connect the 2 wire harness clamps from the floor shift assembly.

(e) Connect the 2 connector.

2. INSTALL KEY INTERLOCK CABLE

(a) Pass the key interlock cable end through the hole in the floor shift assembly.

HINT:

Make sure that the claws shown by the arrow in the illustration are locked.

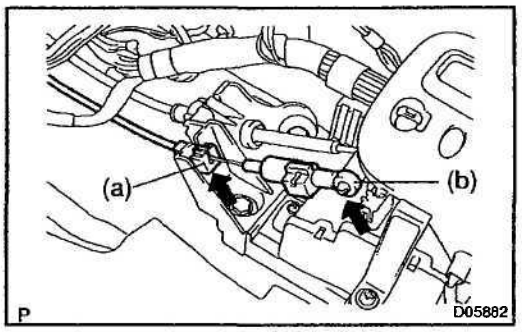

(b) With the shift lever in N position, set the hole of the cable end to the floor shift assembly to assemble them.

(c) At the time of reassembly:
With the key in ACC, push a claw into lock key.
At this time, be careful not to apply undue force on bending to the cable (Cable length adjustment is completed).

HINT:

Check that the key lock cam is contact with the cam stopper.

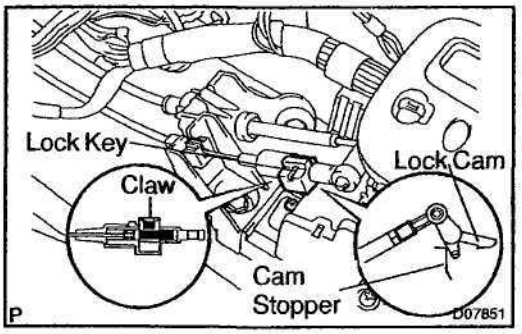

(d) With the key in ACC, install the cable cap claw to the key interlock.

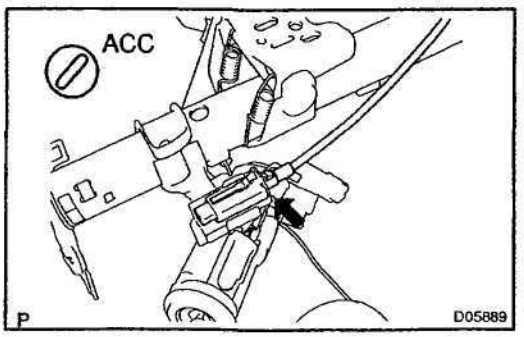

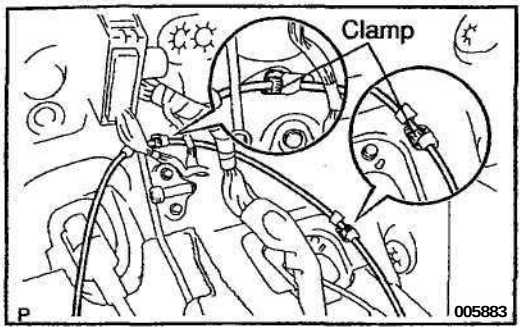

(e) Connect the 2 key interlock cable clamps.
(f) Pull in the cable while pressing the clip of the key interlock cable.

3. INSTALL AIR CONDITIONING UNIT (See page AC–29)

4. INSTALL INSTRUMENT PANEL (See page BO–85)

5. INSPECT KEY INTERLOCK AND SHIFT LOCK OPERATION

(a) Check that a key can be turn from ACC to LOCK only when the shift lever is in P position.
(b) Check that the key cannot be turned to LOCK when the shift lever is position in other than P position.
(c) When the ignition key is in LOCK, check that pressing the shift release button enables the shift lever to shift from P position to other positions.

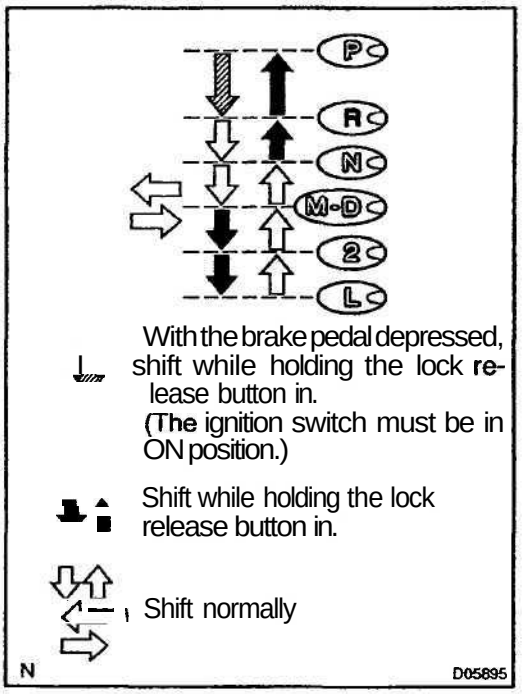

(d) When shifting it to each position, make sure that the shifting lever moves smoothly, can be moderately operated and the position indicator displays correctly.

Positions which can be operated without pressing the shift lever knob button

R → N → D → M → D, L → **2 → D →** N

Positions which can be operated only while pressing the shift lever knob button

D → 2 → L, N → R → P

Positions which can be operated only while pressing the shift lever knob button, ignition switch ON and brake pedal depressed

P → R

(e) When starting the engine make sure that the vehicle moves forward when shifting form N to D position, and moves rearward when shifting to R position.

6. ADJUSTMENT IN CASE OF MALFUNCTION

(a) When the key can not be turned from ACC to LOCK even though the shift lever is in P position:

This is the condition where the cable end on the ignition key side is not returned to the position where it can be locked. The condition is caused by undue bending of the cable, rotative resistance of the pin on the shift lever side, or increased resistance due to any reason such as twisting of the cable. Reinstall and readjust the key interlock cable.

(b) When the key is turned from ACC to LOCK even though the shift lever is in other than P Position:
Since the cable is too long due to improper adjustment at the automatic adjustment part of the key can not be locked. Readjust the key interlock cable.

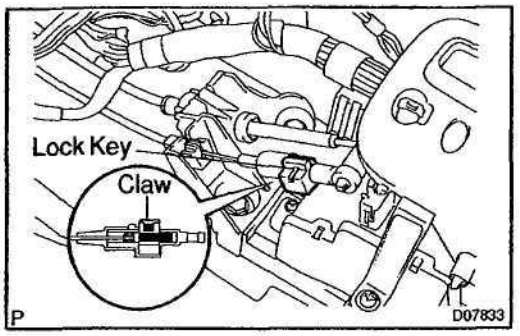

7. READJUSTMENT OF KEY INTERLOCK CABLE

HINT:
Assembly shall be undertaker in the same way as step 2.

(a) Using a screwdriver, unlock the claw of the lock key of the automatic adjustment part.

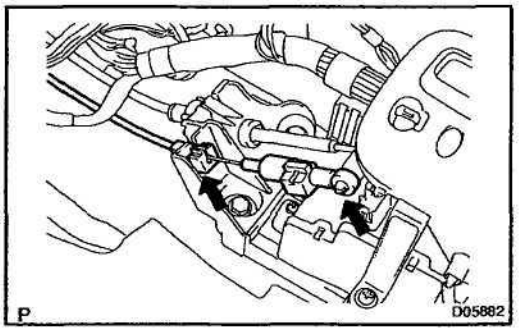

(b) Remove the key interlock cable end from the rod of the floor shift assembly.

(c) Pull out the cable while pressing the clip of the key interlock cable.

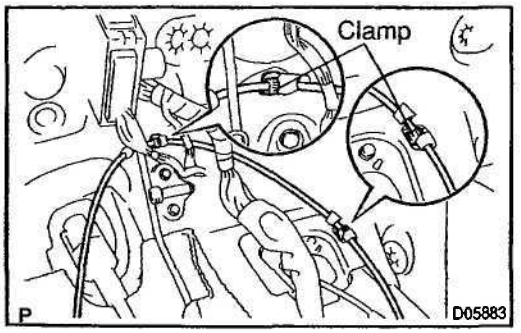

(d) Remove the cable clamp from the other.

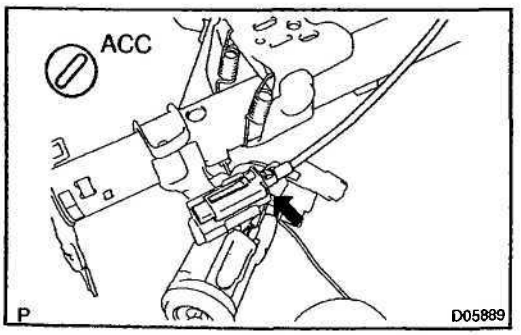

(e) With the key in ACC, install the cable cap claw to the key interlock.

AUTOMATIC TRANSAXLE UNIT

COMPONENTS

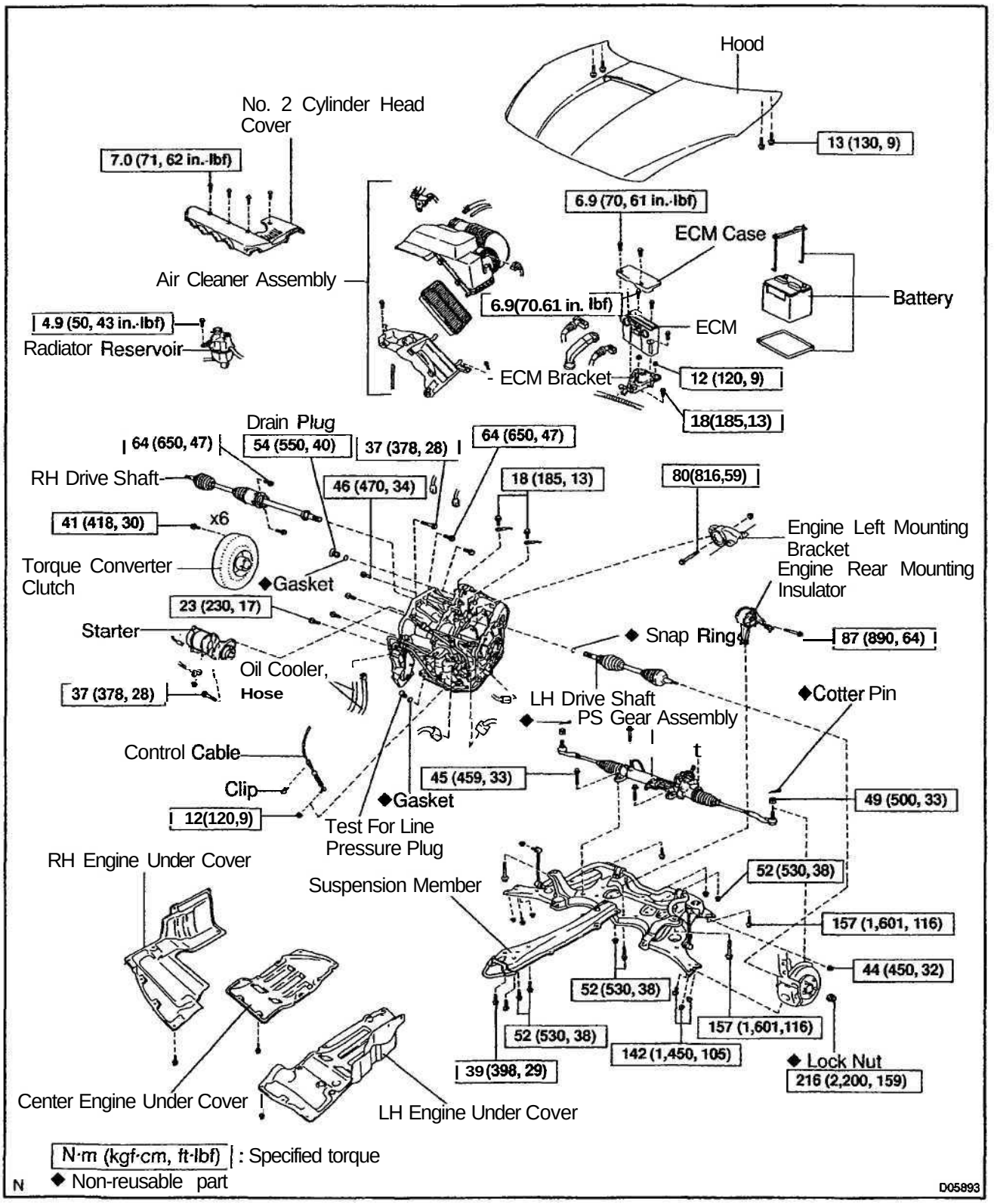

REMOVAL

1. REMOVE HOOD
   Torque: 13 N·m (130 kgf·cm, 9 ft·lbf)
2. REMOVE BATTERY
3. REMOVE ECM AND ECM CASE
   Torque: 6.9 N·m (70 kgf·cm, 61 in.·lbf)
4. REMOVE ECM BRACKET
   Torque:
   Bolt: 18 N·m (185 kgf·cm, 13 ft·lbf)
   Nut: 12 N·m (120 kgf·cm, 9 ft·lbf)
5. REMOVE AIR CLEANER ASSEMBLY
6. REMOVE NO. 2 CYLINDER HEAD COVER
   Torque: 7.0 N·m (71 kgf-cm, 62 in.·lbf)

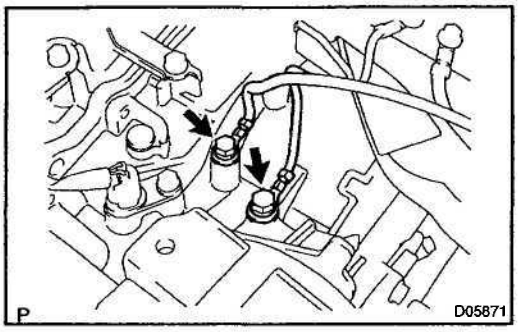

7. REMOVE 2 GROUND CABLES
   Torque: 18 N·m (185 kgf·cm, 13 ft·lbf)
8. DISCONNECT CONTROL CABLE FROM CLAMP
9. DISCONNECT INPUT TURBINE SPEED SENSOR CONNECTOR
10. DISCONNECT COUNTER GEAR SPEED SENSOR CONNECTOR
11. REMOVE VEHICLE SPEED SENSOR CONNECTOR

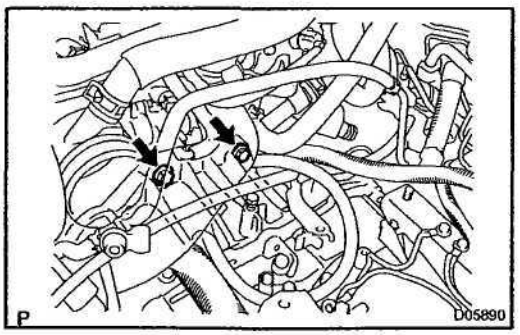

12. REMOVE 2 UPPER SIDE TRANSAXLE MOUNTING BOLTS FROM TRANSAXLE
    Torque: 64 N·m (650 kgf·cm, 47 ft·lbf)

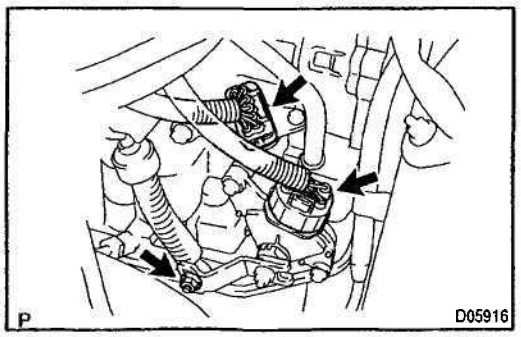

13. DISCONNECT SOLENOID CONNECTOR AND PARK/NEUTRAL POSITION SWITCH CONNECTOR

Disconnect the solenoid connector and park/neutral position switch connector.

14. DISCONNECT CONTROL CABLE

(a) Remove the nut from the control shift lever.
    Torque: 12 N·m (120 kgf·cm, 9 ft·lbf)
(b) Remove the clip and disconnect the control cable.

15. REMOVE BOLT AND DISCONNECT RADIATOR **RES-**ERVOIR
Torque: 4.9 **N·m** (50 **kgf·cm,** 43 **in.·lbf)**

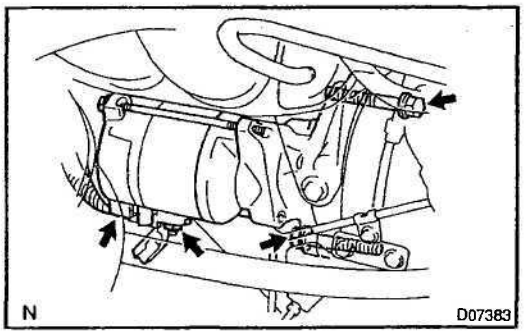

16. REMOVE STARTER
(a) Remove the nut and wire, and disconnect the connector.
(b) Remove the 2 bolts and starter.
Torque: 37 N-m (378 kgf·cm, 28 ft·lbf)
17. REMOVE LH, RH, CENTER ENGINE UNDER COVERS

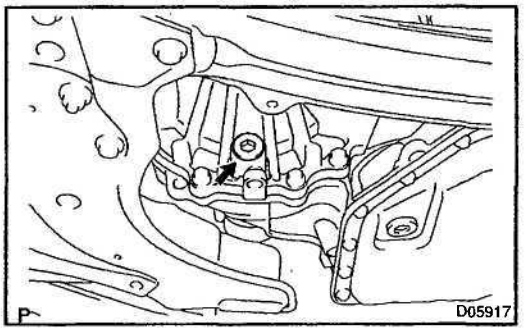

18. DRAIN ATF FROM FRONT DIFFERENTIAL CASE
Torque: 54 **N·m** (550 **kgf·cm,** 40 **ft·lbf)**
19. REMOVE LH AND RH DRIVE SHAFTS
(See page **SA–20)**

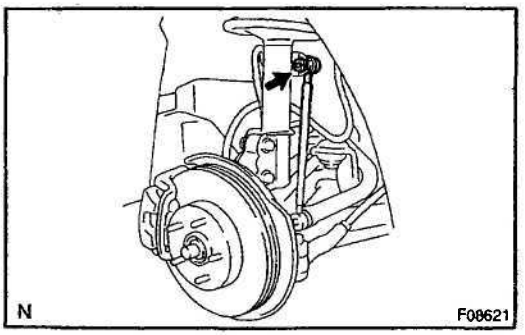

20. DISCONNECT LH AND RH STABILIZER BAR LINKS FROM SHOCK ABSORBER
Torque: 44 N·m (450 kgf·cm, 32 ft·lbf)

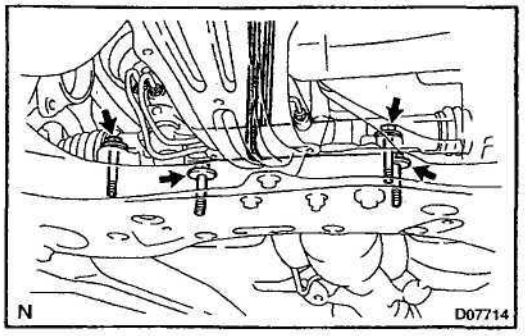

21. REMOVE 4 BOLTS AND DISCONNECT PS GEAR AS-SEMBLY
HINT:
Support the PS gear assembly securely.
Torque: 45 N-m (459 kgf·cm, 33 ft·lbf)

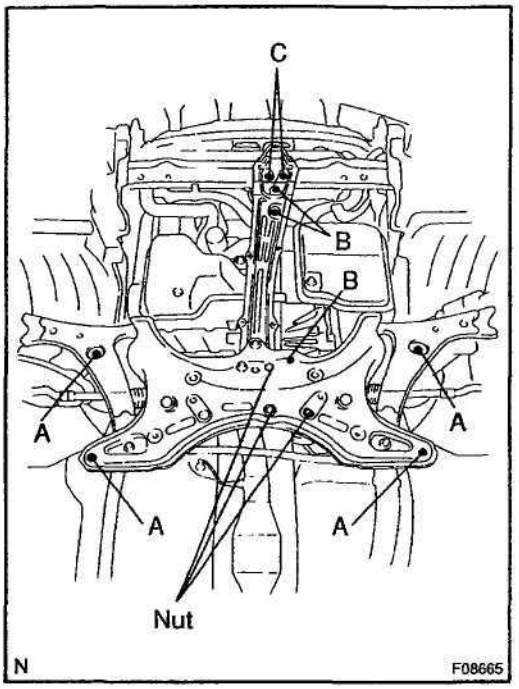

22. REMOVE SUSPENSION MEMBER

(a) Remove the 9 bolts and 3 nuts.

Torque:
Bolt A: 157 N·m (1,601 kgf·cm, 116 ft·lbf)
Bolt B: 52 N·m (530 kgf·cm, 38 ft·lbf)
Bolt C: 39 N·m (398 kgf·cm, 29 ft·lbf)
Nut: 52 N·m (530 kgf·cm, 38 ft·lbf)

(b) Remove the suspension member.

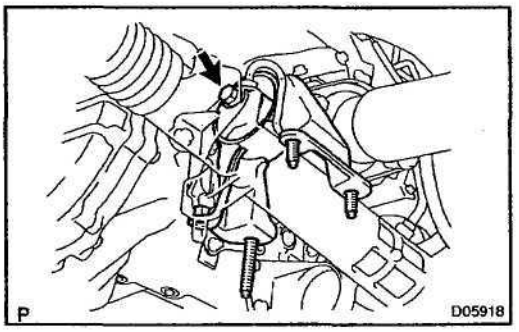

23. REMOVE ENGINE REAR MOUNTING INSULATOR

Remove the bolt and engine rear mounting insulator.

Torque: 87 N·m (890 kgf·cm, 64 ft·lbf)

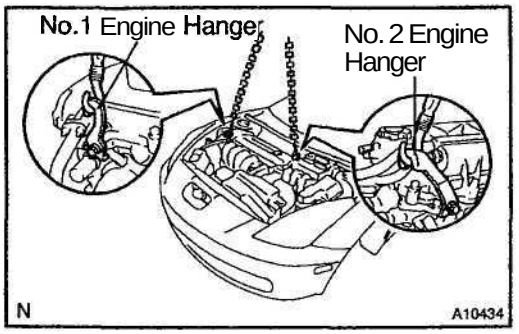

24. ATTACH ENGINE SLING DEVICE TO ENGINE HANGERS

(a) Disconnect the 2 PCV hoses.

(b) Install the No. 1 and No. 2 engine hangers in the correct direction.

Parts No. :
No. 1 engine hanger: 12281–88600
No. 2 engine hanger: 12282–88600
Bolt: 91512–61020
Torque: 38 N·m (387 kgf·cm, 28 ft·lbf)

(c) Attach the engine chain hoist to the engine hangers.

CAUTION:
Do not attempt to hang the engine by hooking the chain to any other part.

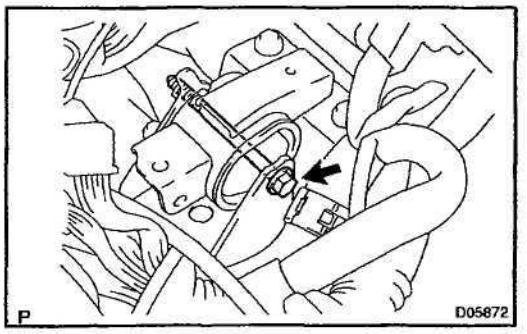

25. REMOVE UPPER SIDE ENGINE LEFT MOUNTING, NUT AND BOLT
Torque: 80 N·m (816 kgf·cm, 59 ft·lbf)

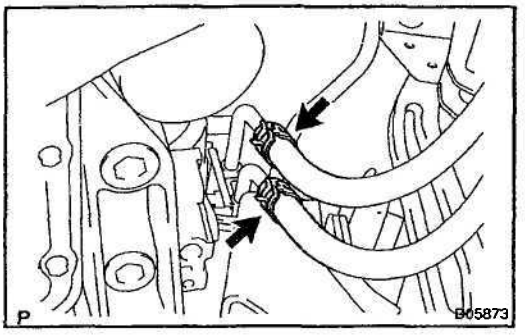

26. REMOVE OIL COOLER HOSE
Loosen the 2 clips and disconnect the 2 oil cooler hoses.

27. SUPPORT TRANSAXLE WITH A JACK

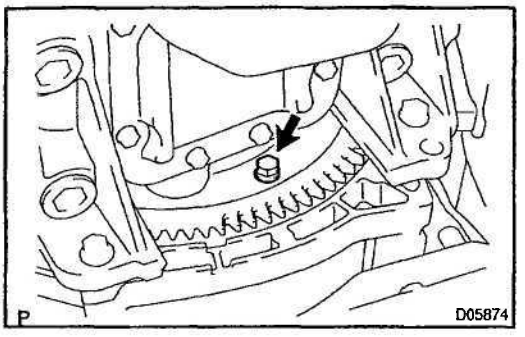

28. REMOVE TORQUE CONVERTER CLUTCH MOUNTINGBOLT
Turn the crankshaft to gain access and remove the 6 bolts holding the crankshaft pulley set bolt with *a* wrench.
Torque: 41 N·m (418 kgf·cm, 30 tt-lbf)
HINT:
At the time of installation, please refer to the following item.
First install black colored bolt and then 5 other bolts.

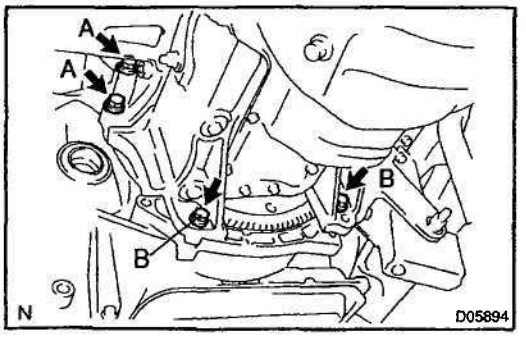

29. REMOVE TRANSAXLE ASSEMBLY
(a) Remove the 4 bolts.
Torque:
A bolt: 46 N·m (470 kgf·cm, 34 ft·lbf)
B bolt: 23 N·m (230 kgf·cm, 17 ft·lbf)
(b) Separate the transaxle from engine, and lower the transaxle.

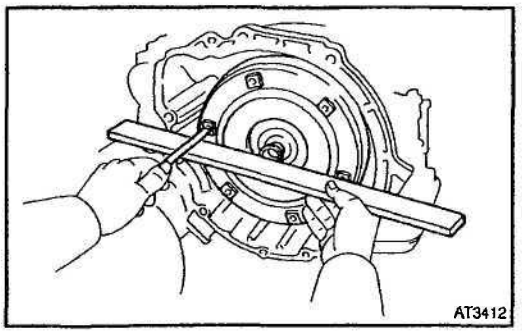

AX0KQ-01

INSTALLATION

1. CHECK TORQUE CONVERTER CLUTCH INSTALLATION

Using calipers and a straight edge, measure the distance between the installed surface and the front surface of the transaxle housing.

Correct distance: More than 13.3 mm (0.524 in.)

2. TRANSAXLE INSTALLATION

Installation is in the reverse order of removal (See page AX–31).

HINT:

- After installation, adjust the shift control cable and park/neutral position switch (See page DI–157).
- Fill ATF and check the fluid level (See page DI–157).
- Perform the test drive of the vehicle.
- Adjust the hood (See page BO–9).

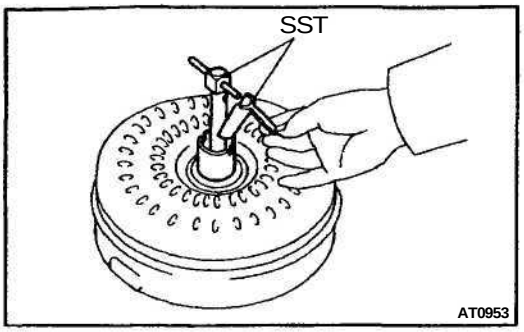

TORQUE CONVERTER CLUTCH AND DRIVE PLATE

AX09X–02

INSPECTION

1. INSPECT ONE-WAY CLUTCH

(a) Install SST into the inner race of the one–way clutch.
SST 09350–32014 (09351–32010)

(b) Install SST so that it fits in the notch of the converter hub and outer race of the one–way clutch.
SST 09350–32014 (09351–32020)

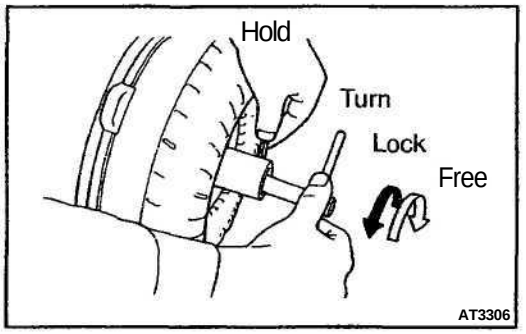

(c) With the torque converter clutch setting up on its side, check that the clutch locks when turned counterclockwise, and rotates smoothly clockwise.

If necessary, clean the converter and retest the clutch.
Replace the converter if the clutch still fails the test.

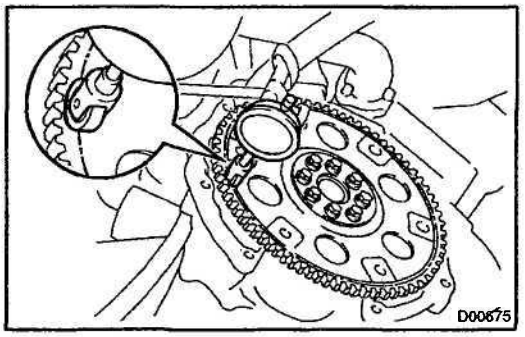

2. MEASURE DRIVE PLATE RUNOUT AND INSPECT RING GEAR

(a) Set up a dial indicator and measure the drive plate runout.

(b) Check the damage of the ring gear.

Maximum runout: 0.20 mm (0.0079 in.)

If the runout is not within the specification or ring gear is damaged, replace the drive plate.

Torque: 88 N·m (897 kgf·cm 65 ft lbf)

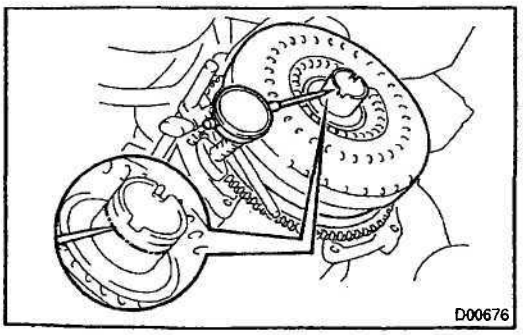

3. MEASURE TORQUE CONVERTER CLUTCH SLEEVE RUNOUT

Temporarily mount the torque converter clutch on the drive plate. Set a dial indicator and measure the torque converter clutch sleeve runout.

Maximum runout: 0.30 mm (0.0118 in.)

If the runout is not within the specification, try to correct by reorienting the installation of the converter.

HINT:
Mark the position of the converter clutch to ensure the installation is correctly performed.

– MEMO –

AUTOMATIC TRANSAXLE (U341 E)

AUTOMATIC TRANSAXLE SYSTEM. AX–1
VEHICLE SPEED SENSOR. AX-3
INPUT TURBIN SPEED SENSOR. AX–4
ATF TEMPERATURE SENSOR. AX–5
PARK/NEUTRAL POSITION (PNP)
SWITCH. AX-7
VALVE BODY ASSEMBLY. AX–9
DIFFERENTIAL OIL SEAL. AX–13
SHIFT LOCK SYSTEM. AX–14
FLOOR SHIFT ASSEMBLY. AX–16
AUTOMATIC TRANSAXLE UNIT. AX–30
TORQUE CONVERTER CLUTCH
AND DRIVE PLATE. AX–36

AX

AUTOMATIC TRANSAXLE SYSTEM

AX042-01

PRECAUTION

If the vehicle is equipped with a mobile communication system, refer to the precautions in the IN section.

AX09J–02

OPERATION

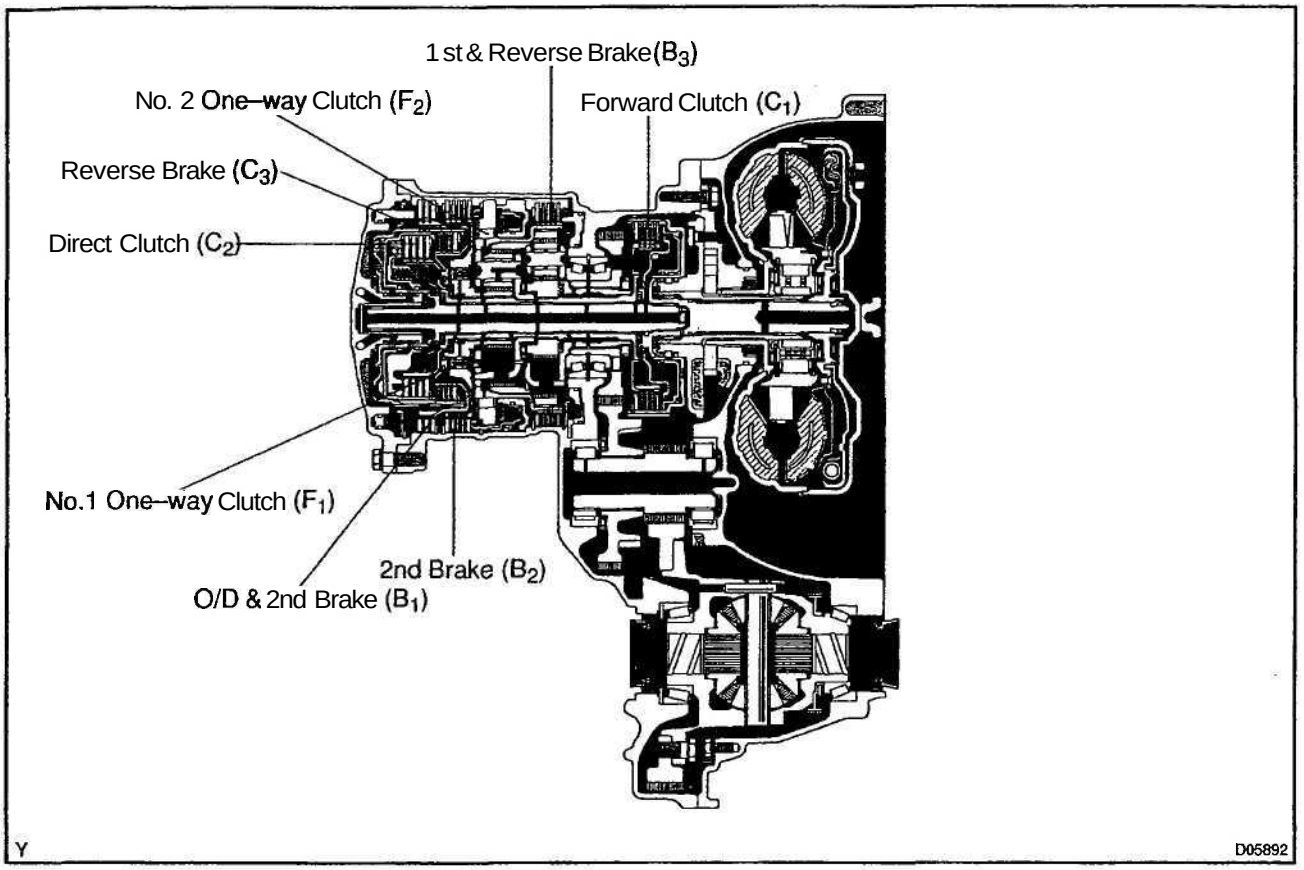

○ ... Operating

Shift lever position	Gear position	C_1	C_2	C_3	B_1	B_2	B_3	F_1	F_2
P	Parking								
R	Reverse			○			○		
N	Neutral								
D	1st	○							○
	2nd	○				○		○	
	3rd	○	○			○			
	O/D		○		○	○			
2	1st	○							○
	2nd	○			○	○		○	
L	1st	○					○		○

AX

VEHICLE SPEED SENSOR

ON–VEHICLE REPAIR

AX0KU–01

1. REMOVE BATTERY
2. REMOVE ECM AND ECM CASE
3. REMOVE ECM BRACKET

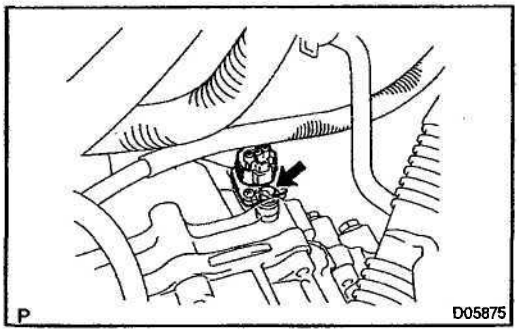

4. DISCONNECT VEHICLE SPEED SENSOR CONNECTOR
5. REMOVE VEHICLE SPEED SENSOR ASSEMBLY

(a) Remove the bolt and vehicle speed sensor assembly.
(b) Remove the clip and speedometer driven gear from the vehicle speed sensor.
(c) Remove the O–ring from the vehicle speed sensor.

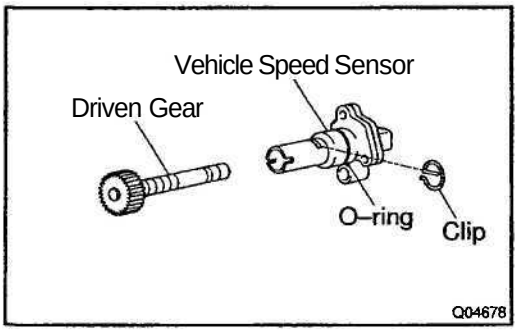

6. INSTALL VEHICLE SPEED SENSOR ASSEMBLY

(a) Coat a new O–ring with ATF and install it to the vehicle speed sensor.
(b) Install the speedometer driven gear to the vehicle speed sensor with clip.
(c) Install the vehicle speed sensor assembly with the bolt.
Torque: 5.5 N·m (56 kgf·cm, 49 in.·lbf)

7. CONNECT VEHICLE SPEED SENSOR CONNECTOR
8. INSTALL ECM BRACKET
Torque:
Bolt: 18 N·m (185 kgf·cm, 13 ft·lbf)
Nut: 12 N·m (120 kgf·cm, 9 ft·lbf)
9. INSTALL ECM AND ECM CASE
Torque: 6.9 N·m (70 kgf·cm, 61 in.·lbf)
10. INSTALL BATTERY

AX

INPUT TURBIN SPEED SENSOR

AX0P1-01

ON–VEHICLE REPAIR

1. **REMOVE BATTERY**
2. **REMOVE ECM AND ECM CASE**
3. **REMOVE ECM BRACKET**

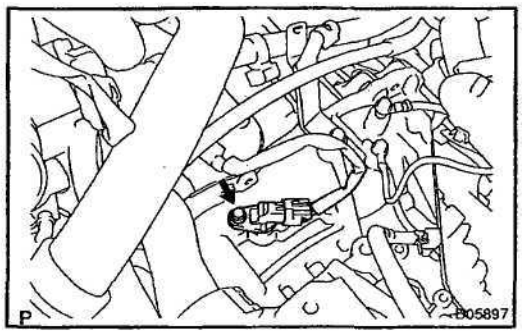

4. **REMOVE INPUT TURBIN SPEED SENSOR**
   (a) Disconnect the connector.
   (b) Remove the bolt and input turbin speed sensor.
   (c) Remove the O–ring from the input turbin speed sensor.
5. **INSTALL INPUT TURBIN SPEED SENSOR**
   (a) Coat a new O–ring with ATF and install it to the input turbin speed sensor.
   (b) Install the input turbin speed sensor with the bolt.
   Torque: 5.4 N·m (55 kgf·cm, 48 in.·lbf)
   (c) Connect the connector.
6. **INSTALL ECM BRACKET**
   Torque:
   Bolt: 18 N·m (185 kgf·cm, 13 tt-lbf)
   Nut: 12 N·m (120 kgf·cm, 9 ft·lbf)
7. **INSTALL ECM AND ECM CASE**
   Torque: 6.9 N·m (70 kgf·cm, 61 in.·lbf)
8. **INSTALL BATTERY**

AX

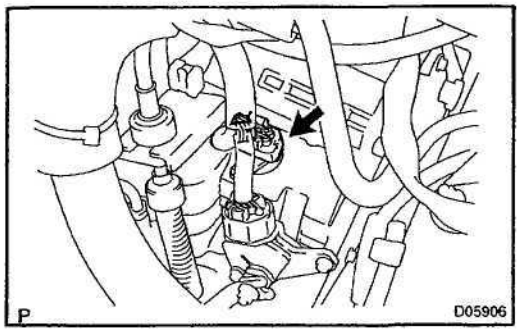

ATF TEMPERATURE SENSOR

AX0KW–01

ON–VEHICLE REPAIR

1. **DISCONNECT SOLENOID CONNECTOR**
2. **REMOVE LH ENGINE UNDER COVER**

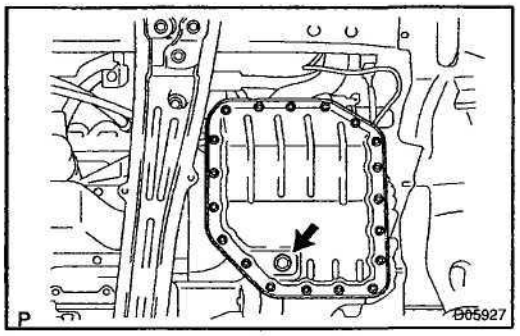

3. **REMOVE DRAIN PLUG AND DRAIN ATF**
4. **REMOVE OIL PAN AND GASKET**

NOTICE:

Some fluid will remain in the oil pan.

Remove the 19 bolts, and carefully remove the oil pan assembly. Discard the gasket.

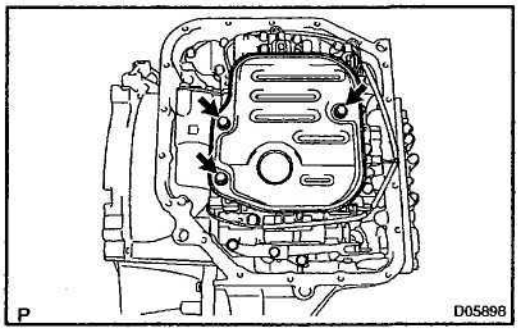

5. **REMOVE OIL STRAINER**

(a) Remove the 3 bolts and oil strainer.

(b) Remove the O–ring.

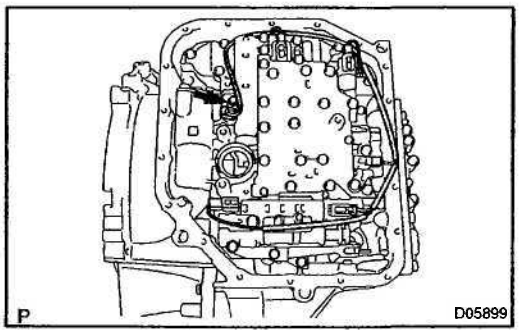

6. **DISCONNECT 5 SHIFT SOLENOID VALVE CONNECTORS**
7. **REMOVE ATF TEMPERATURE SENSOR**

(a) Remove the bolt and lock plate, and remove the ATF temperature sensor.

(b) Remove the O–ring from the ATF temperature sensor.

8. **INSTALL ATF TEMPERATURE SENSOR**

(a) Coat a new O–ring with ATF and it to the direct clutch speed sensor.

(b) Install the ATF temperature sensor with the lock plate and bolt.

Torque: 10 N m (110 kgf·cm, 8 ft·lbf)

9. **CONNECT 5 SHIFT SOLENOID VALVE CONNECTORS**

A

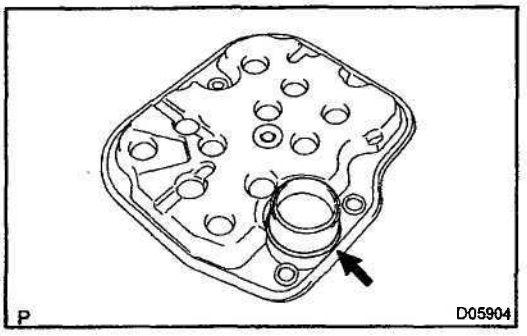

10. INSTALL OIL STRAINER

(a) Coat a new O–ring with ATF.

(b) Install the O–ring to the oil strainer.

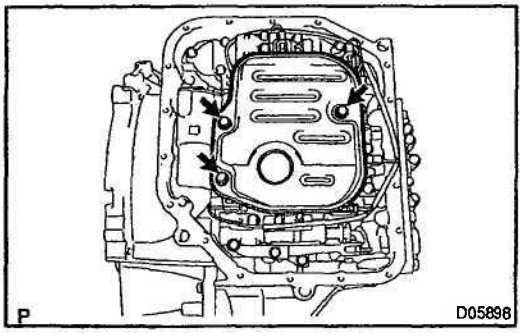

(c) Install the oil strainer with the 3 bolts.
Torque: 11 N·m (110 kgf·cm, 8 ft·lbf)

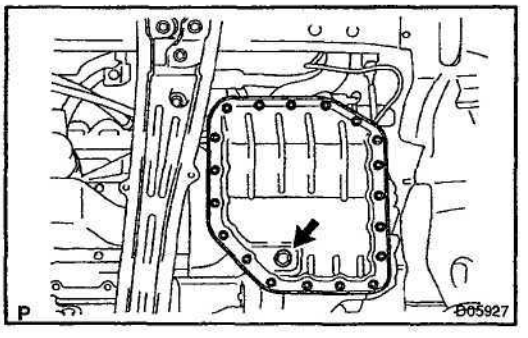

11. INSTALL OIL PAN

Install the oil pan and a new gasket with the 19 bolts.
Torque: 7.8 N·m (80 kgf·cm, 69 in.·lbf)

12. INSTALL DRAIN PLUG

Install a new gasket and drain plug.
Torque: 49 N·m (500 kgf·cm, 36 tt-lbf)

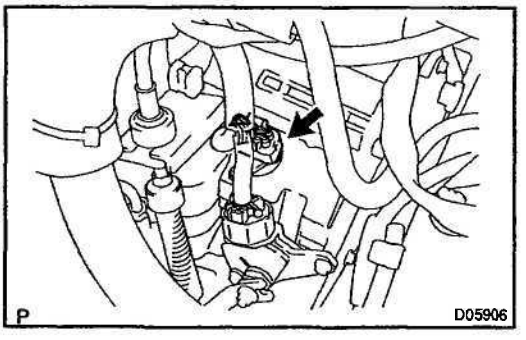

13. CONNECT SOLENOID CONNECTOR

14. FILL ATF AND CHECK ATF LEVEL
(See page DI–220)

15. INSTALL LH ENGINE UNDER COVER

AX

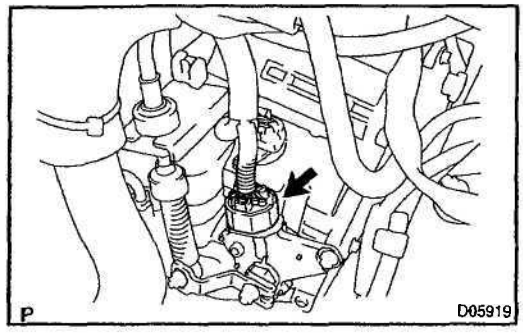

PARK/NEUTRAL POSITION (PNP) SWITCH

ON–VEHICLE REPAIR

AX0IOX–01

1. REMOVE AIR CLEANER ASSEMBLY

2. DISCONNECT PARK/NEUTRAL POSITION SWITCH CONNECTOR

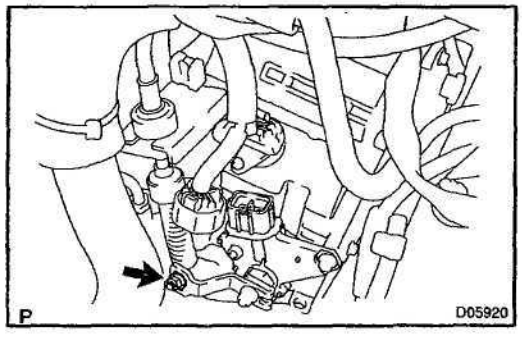

3. REMOVE PARK/NEUTRAL POSITION SWITCH

(a) Remove the nut.

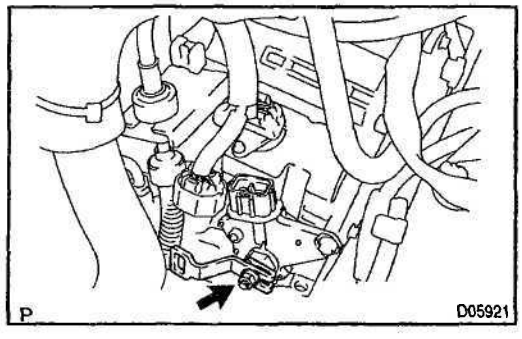

(b) Remove the nut, washer and control shift lever.

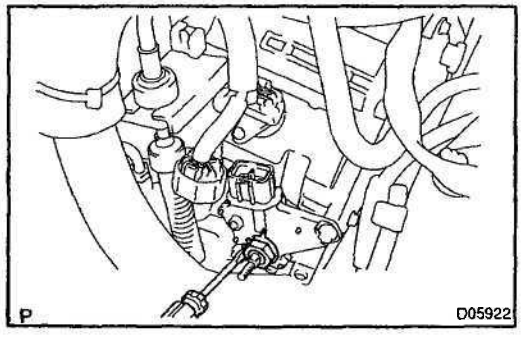

(c) Using a screwdriver, pry off the lock plate.

(d) Remove the nut and lock plate.

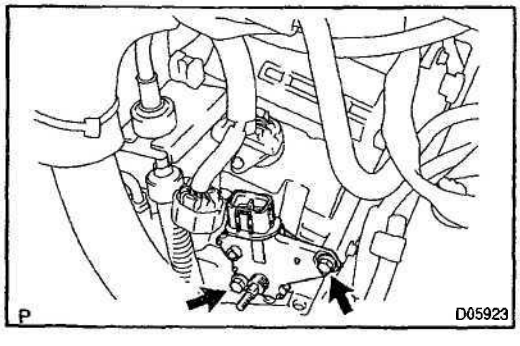

(e) Remove the 2 bolts and pull out the park/neutral position switch.

4. INSTALL AND ADJUST PARK/NEUTRAL POSITION SWITCH

(a) Install the park/neutral position switch with the 2 bolts.
Torque: 5.4 N·m (55 kgf·cm, 48 in.·lbf)

(b) Install a new lock plate and nut.
Torque: 6.9 N·m (70 kgf·cm, 61 in.·lbf)

(c) Bend the claws on the lock plate to fix the nut.

AX

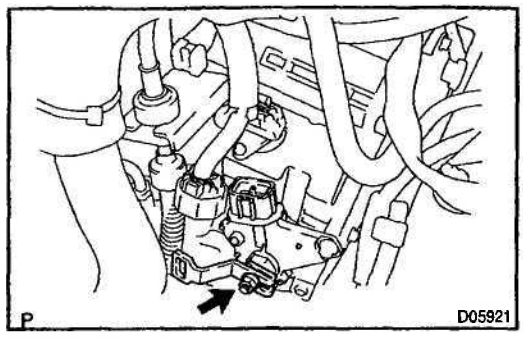

(d) Install the control shift lever with the nut.
Torque: 13 N·m (130 kgf·cm, 9 ft·lbf)

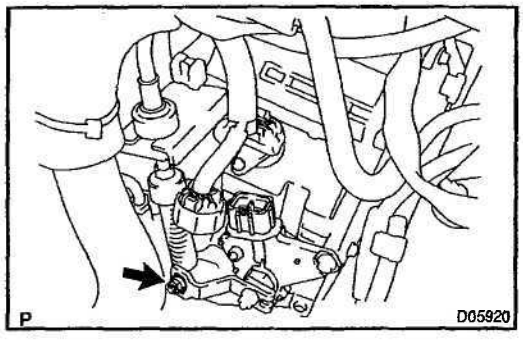

(e) Connect the shift control cable to the control shaft.
Torque: 12 N·m (120 kgf·cm, 9 ft·lbf)

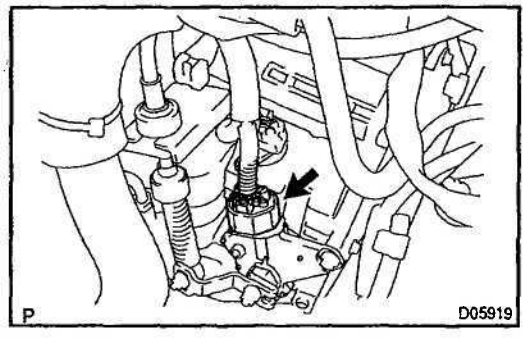

5. CONNECT PARK/NEUTRAL POSITION SWITCH CONNECTOR

6. CHECK PARK/NEUTRAL POSITION OPERATION

Check that the engine can be started with the shift lever only in the N or P position, but not in other position.

If the engine can not be stated not as started above, carry out the adjustment procedure (See page DI–220).

7. INSTALL AIR CLEANER ASSEMBLY

8. TEST DRIVE VEHICLE

AX

VALVE BODY ASSEMBLY

ON–VEHICLE REPAIR

AX0KK–02

1. REMOVE LH ENGINE UNDER COVER

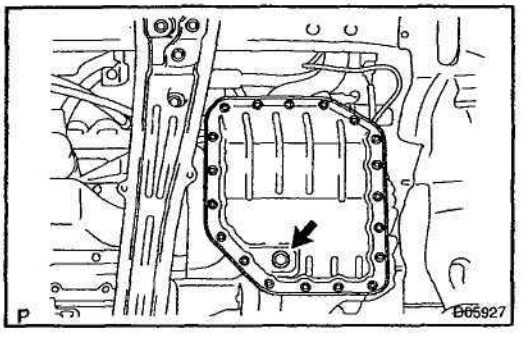

2. REMOVE DRAIN PLUG AND DRAIN ATF

3. REMOVE OIL PAN AND GASKET

NOTICE:

Some fluid will remain in the oil pan.

Remove the 19 bolts, and carefully remove the oil pan assembly. Discard the gasket.

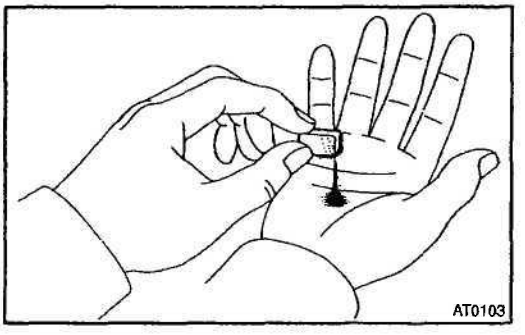

4. EXAMINE PARTICLES IN OIL PAN

Remove the magnets and use them to collect any steel chips. Look carefully at the chips and particles in the pan and on the magnet to anticipate what type of wear you will find in the transaxle.

Steel (magnetic)...bearing, gear and plate wear

Brass (non–magnetic)... bushing wear

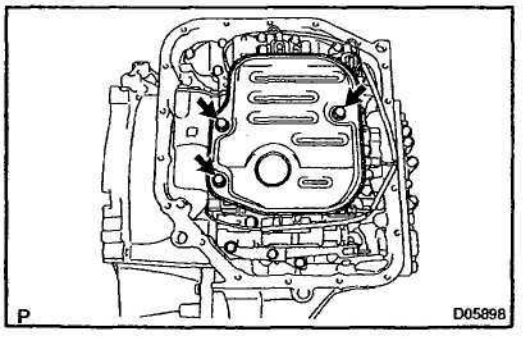

5. REMOVE OIL STRAINER

(a) Remove the 3 bolts and oil strainer.

(b) Remove the O–ring.

AX

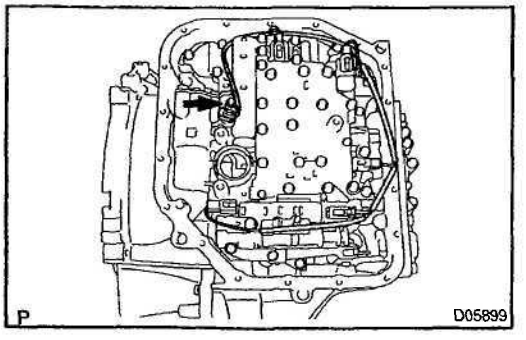

6. DISCONNECT 5 SHIFT SOLENOID VALVE CONNECTORS

7. REMOVE ATF TEMPERATURE SENSOR

Remove the bolt and lock plate, and remove the ATF temperature sensor.

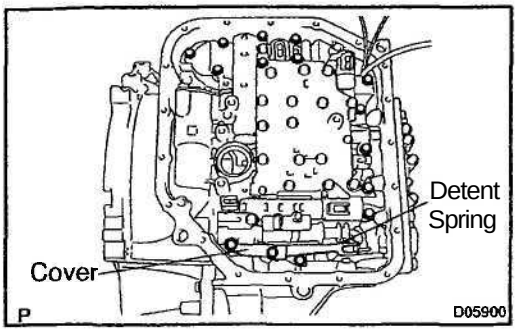

8. REMOVE VALVE BODY

(a) Remove the 3 bolts, cover and detent spring.

(b) Remove the 12 bolts and valve body.

NOTICE:

Be careful not to drop the check valve body, spring and s - cumulator piston.

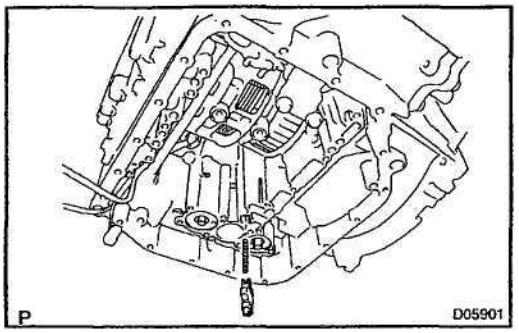

9. REMOVE CHECK BALL BODY AND SPRING

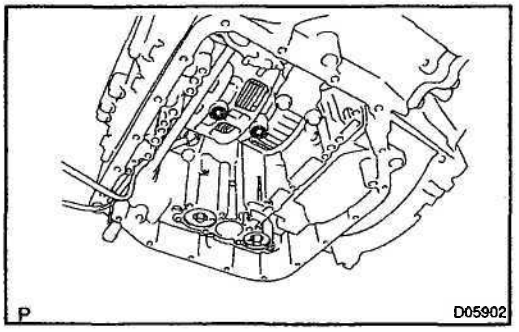

10. REMOVE 2 APPLY GASKETS

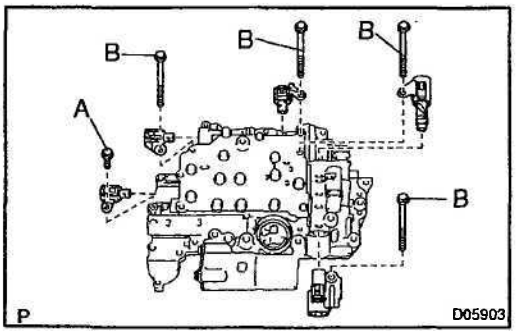

11. REMOVE SHIFT SOLENOID VALVE

Remove the 5 bolts and 5 shift solenoid valves.

12. INSTALL SHIFT SOLENOID VALVE

Install the 5 shift solenoid valves with the 5 bolts.

Torque:

Bolt A: 6.6 N·m (67 kgf·cm, 58 in.·lbf)

Bolt B: 11 N·m (110 kgf·cm, 8 ft·lbf)

Bolt length:

Bolt A: 14 mm (0.55 in.)

Bolt B: 55 mm (2.17 in.)

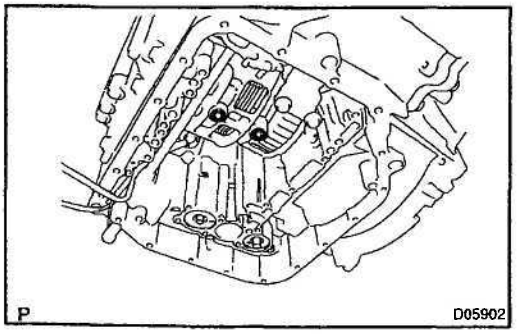

13. INSTALL APPLY GASKET

(a) Coat 2 new apply gaskets with ATF.

(b) Install the gaskets to the transaxle case.

AX

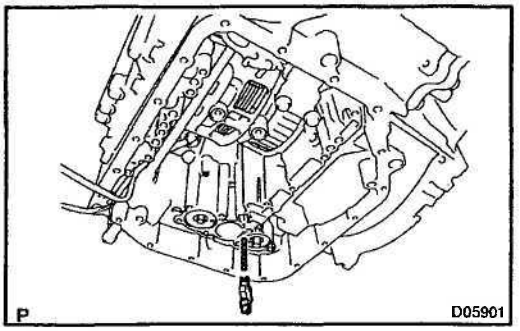

14. INSTALL CHECK VALVE AND SPRING

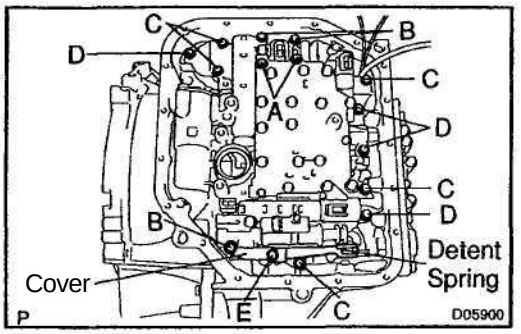

15. INSTALL VALVE BODY

(a) Align the groove of the manual valve with the pin of the manual valve lever.

(b) Temporarily install the valve body with the 12 bolts.

Bolt length:
Bolt A: 55 mm (2.17 in.)
Bolt B: 45 mm (1.77 in.)
Bolt C: 32 mm (1.26 in.)
Bolt D: 22 mm (0.87 in.)

(c) Temporarily install the detent spring and cover with the 3 bolts.

Bolt length:
Bolt B: 45 mm (1.77 in.)
Bolt C: 32 mm (1.26 in.)
Bolt E: 14 mm (0.55 in.)

(d) Check that the manual valve lever contacts the center of the roller at the tip of the detent spring.

(e) Tighten the 15 bolts.

Torque: 11 N·m (110 kgf·cm, 8 ft·lbf)

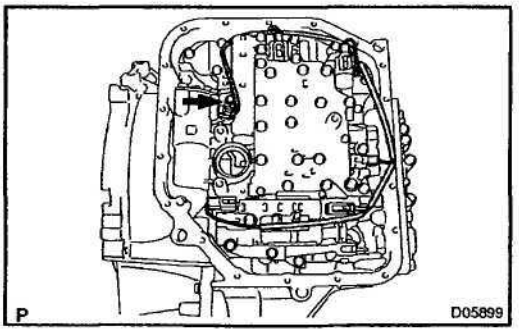

16. INSTALL ATF TEMPERATURE SENSOR

Install the ATF temperature sensor with the lock plate and bolt.

Torque: 10 N·m (100 kgf·cm, 8 ft·lbf)

17. CONNECT 5 SHIFT SOLENOID VALVE CONNECTORS

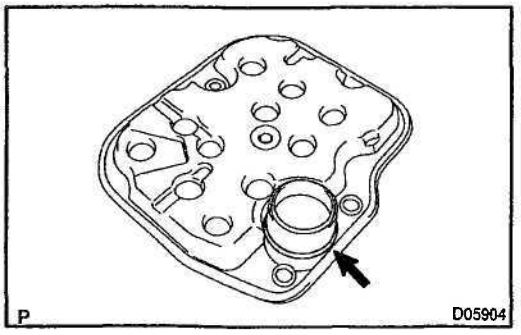

18. INSTALL OIL STRAINER

(a) Coat a new O–ring with ATF.

(b) Install the O–ring to the oil strainer.

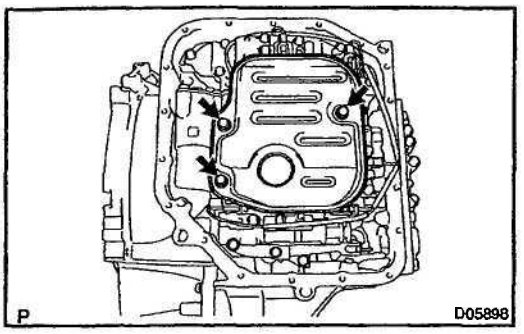

(c) Install the oil strainer with the 3 bolts.
Torque: 11 N·m (110 kgf·cm, 8 ft·lbf)

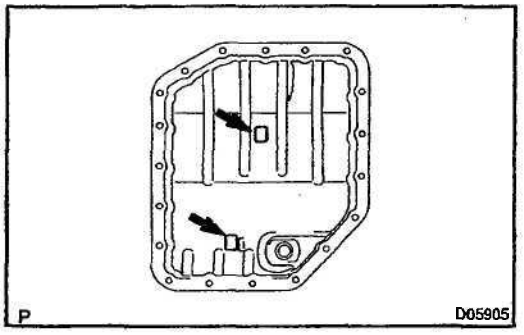

19. INSTALL MAGNET IN OIL PAN
Install the 2 magnets in the oil pan, as shown in the illustration.

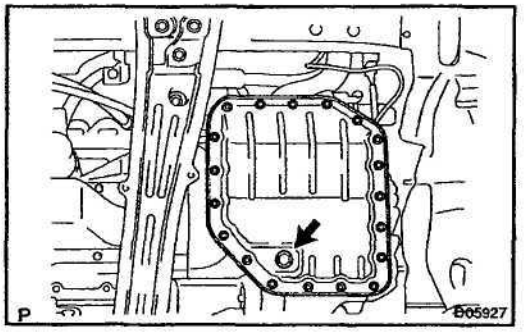

20. INSTALL OIL PAN
Install the oil pan and a new gasket with the 19 bolts.
Torque: 7.8 N·m (80 kgf·cm, 69 in.·lbf)

21. INSTALL DRAIN PLUG
Install a new gasket and drain plug.
Torque: 49 N·m (500 kgf-cm, 36 ft·lbf)

22. FILL ATF AND CHECK ATF LEVEL
(See page DI–220)

23. INSTALL LH ENGINE UNDER COVER

DIFFERENTIAL OIL SEAL

ON–VEHICLE REPAIR

AX0KZ-01

1. **DRAIN ATF FROM FRONT DIFFERENTIAL CASE**
2. **REMOVE LH AND RH DRIVE SHAFTS**
   (See page SA–20)

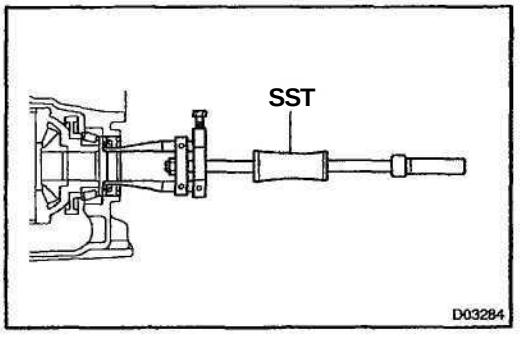

3. **REMOVE LH AND RH SIDE OIL SEAL**

Using SST, drive out both the side oil seals.

SST 09308–10010

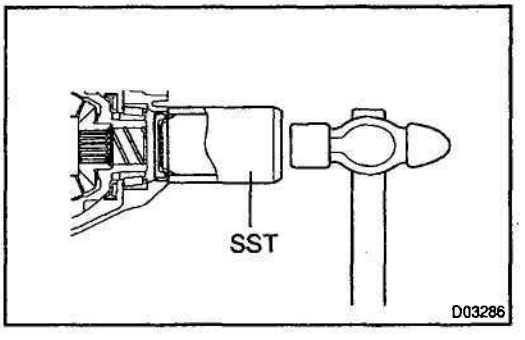

4. **INSTALL LH AND RH SIDE OIL SEAL**

(a) Using SST and a hammer, drive in a new oil seal.

SST 09223–00010

Oil seal drive in depth:

LH side: 2.7 ± 0.5 mm (0.106 ± 0.020 in.)

RH side: 0 ± 0.5 mm (0 ± 0.020 in.)

(b) Coat the oil seal lip with MP grease.

5. **INSTALL LH AND RH DRIVE SHAFTS**
   (See page SA–32)
6. **FILL ATF AND CHECK ATF LEVEL**
   (See page DI–220)

SHIFT LOCK SYSTEM

COMPONENTS

AX0LD-01

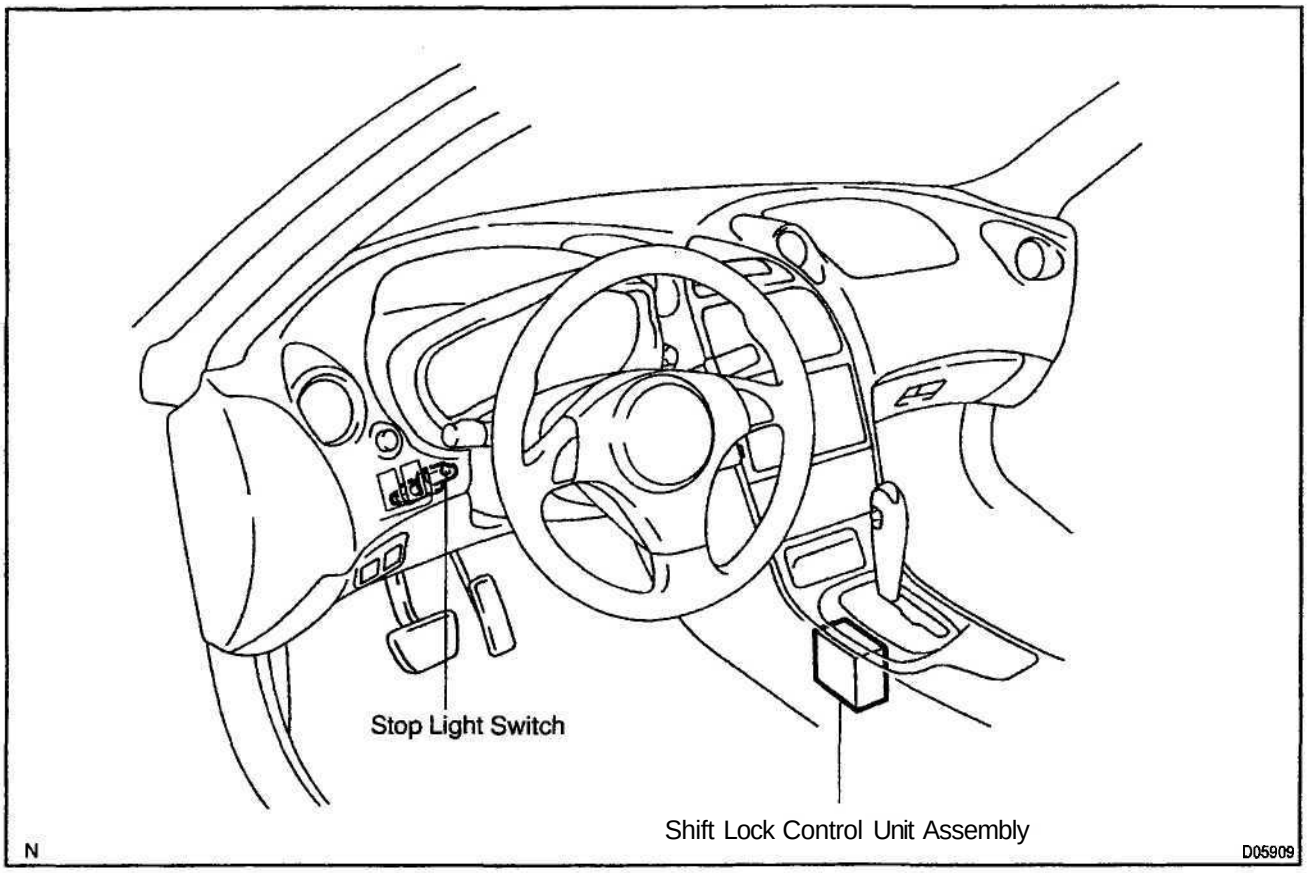

AX0L1-01

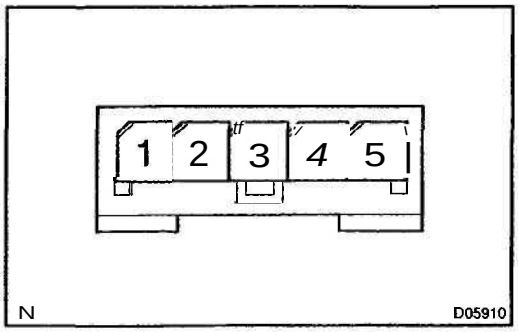

INSPECTION

INSPECT SHIFT LOCK CONTROL UNIT ASSEMBLY

Using a voltmeter, measure the voltage at each terminal.

HINT:

Do not disconnect the shift lock control unit assembly connector.

Terminal	Measuring Condition	Voltage (V)
5 – 1 (IG – E)	Ignition switch ON	10 – 14
3 – 1 (STP – E)	Depressing brake pedal	10 – 14

FLOOR SHIFT ASSEMBLY

COMPONENTS

AX0LB-01

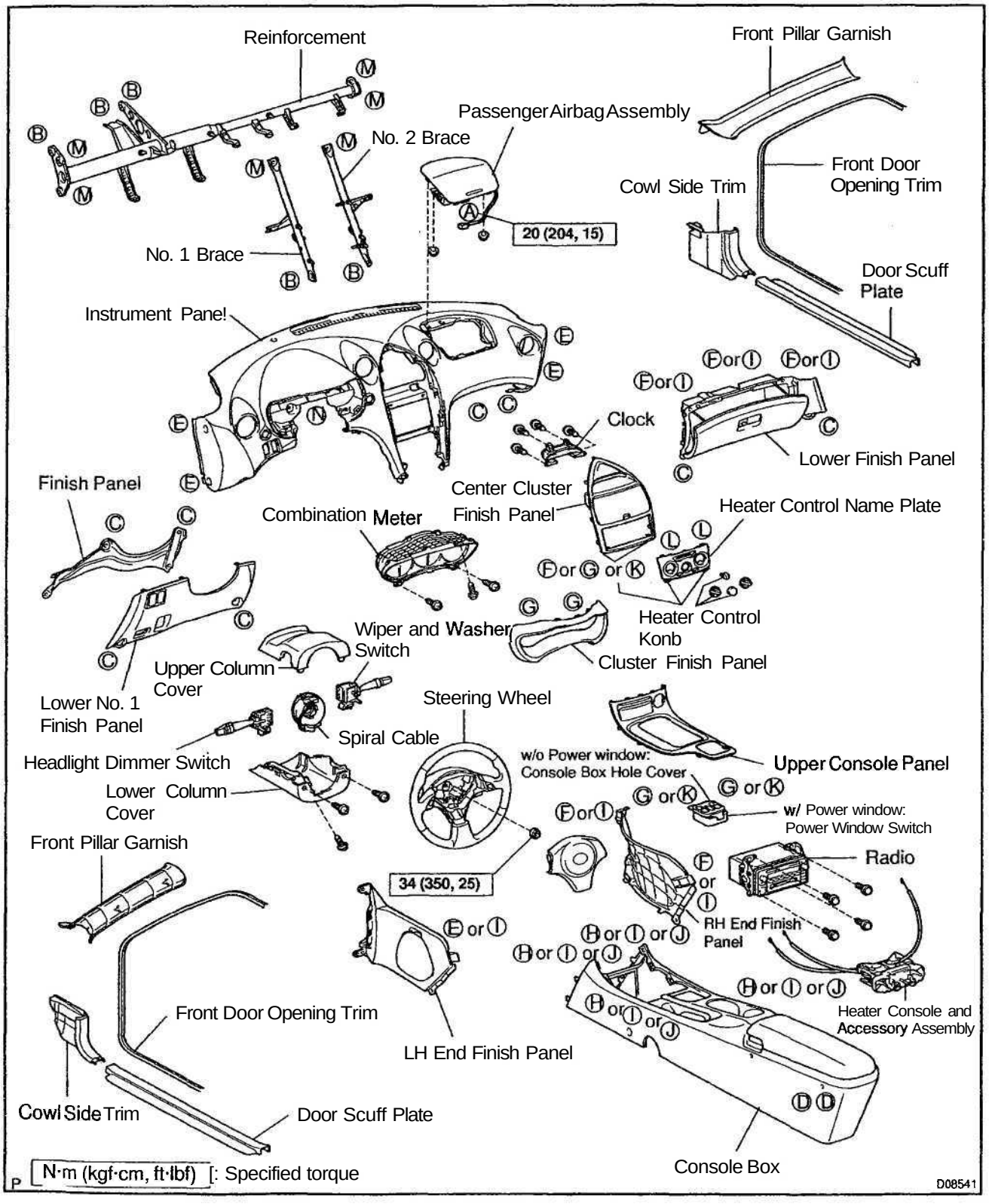

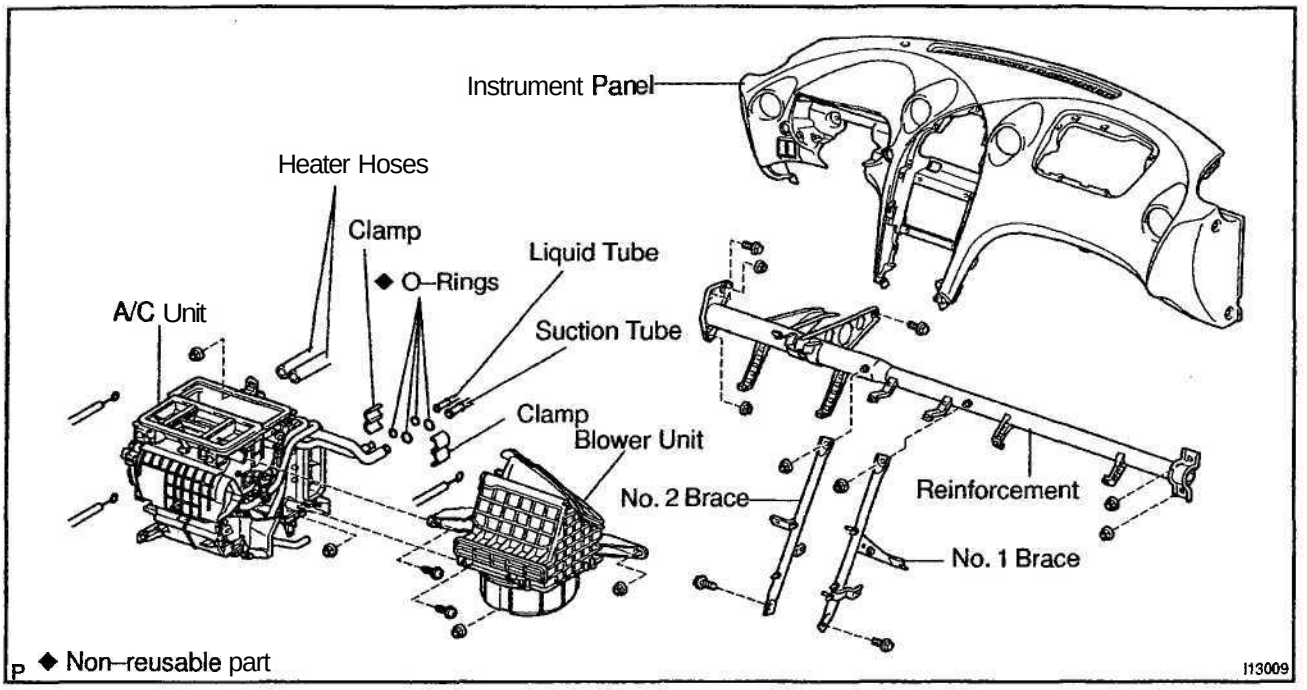
Instrument Panel
Heater Hoses
Clamp
◆ O–Rings
Liquid Tube
A/C Unit
Suction Tube
Clamp
Blower Unit
No. 2 Brace
Reinforcement
No. 1 Brace
P ◆ Non–reusable part
I13009

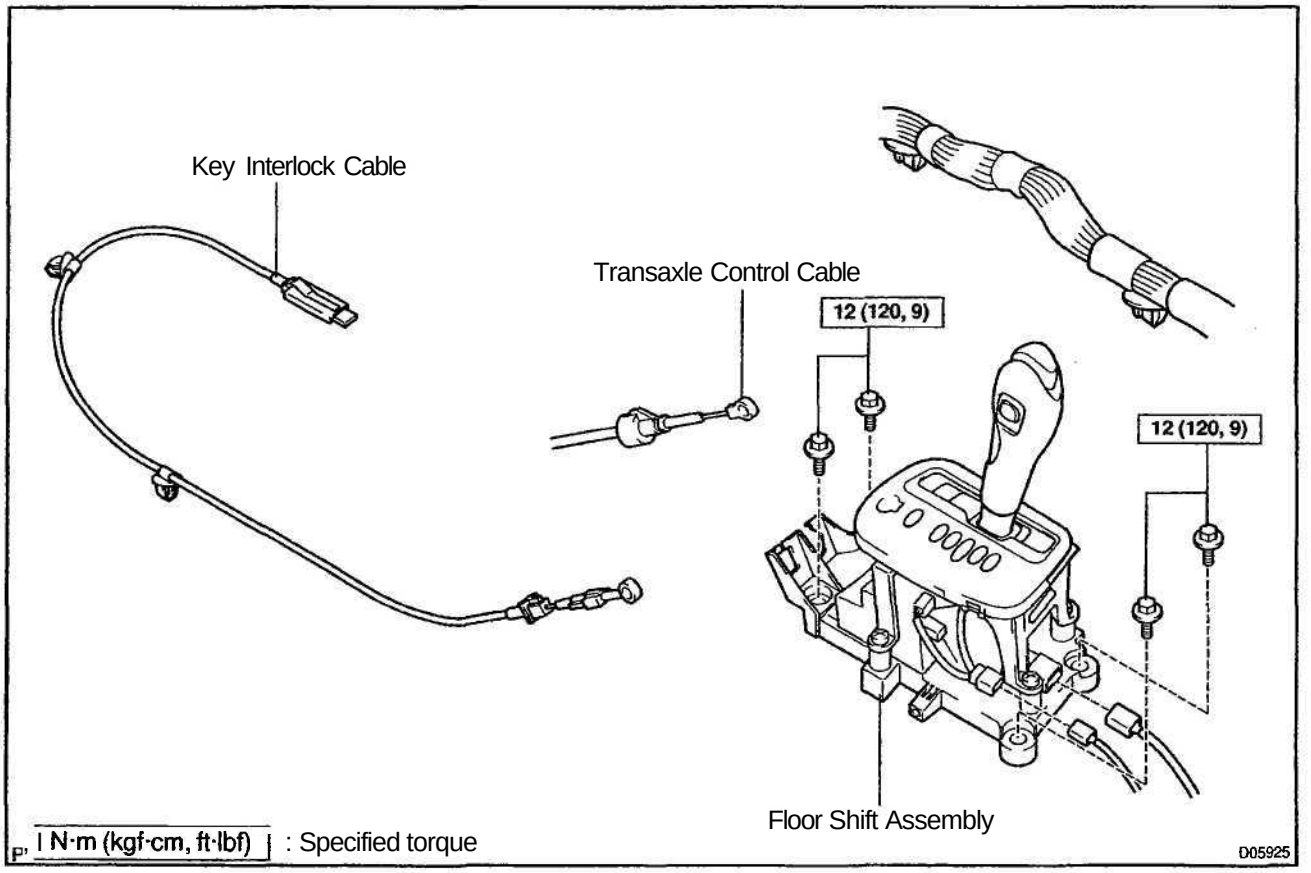
Key Interlock Cable
Transaxle Control Cable
12 (120, 9)
12 (120, 9)
Floor Shift Assembly
P N·m (kgf·cm, ft·lbf) : Specified torque
D05925

HINT:
Screw shapes and sizes are indicated in the table below. The codes ("A" - "N") correspond to those indicated on the previous page.

mm (in.)

	Shape	Size		Shape	Size		Shape	Size
Ⓑ	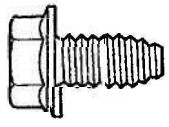	ø = 8 (0.32) L- 16 (0.63)	Ⓑ	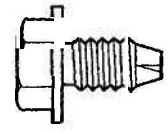	0 = 8 (0.32) L- 15 (0.59)	Ⓒ	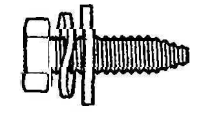	ø = 6 (0.24) L =22 (0.87)
Ⓒ	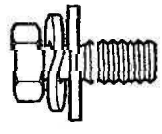	0 = 6 (0.24) L- 16 (0.63)	Ⓒ	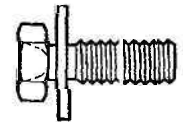	0 = 6 (0.24) L- 18 (0.71)	Ⓒ	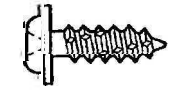	0 = 5.22 (0.2055) L- 16 (0.63)
Ⓓ	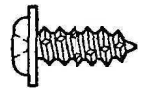	0 =5.22 (0.2055) L=16 (0.63)	Ⓓ	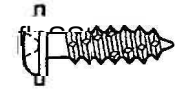	0 = 5 (0.20) L=18 (0.71)	Ⓘ	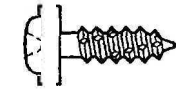	0 = 5 (0.20) L=16 (0.63)
Ⓙ	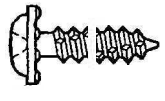	0 = 5 (0.20) L=16 (0.63)	Ⓓ		0 = 5 (0.20) L=14 (0.55)	Ⓛ	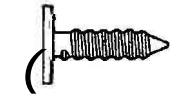	0 = 4 (0.16) L=16 (0.63)
Ⓡ	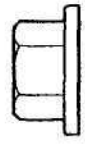	0 = 8 (0.32)	Ⓡ	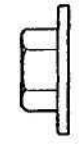	0 = 6 (0.24)			

P

H12659

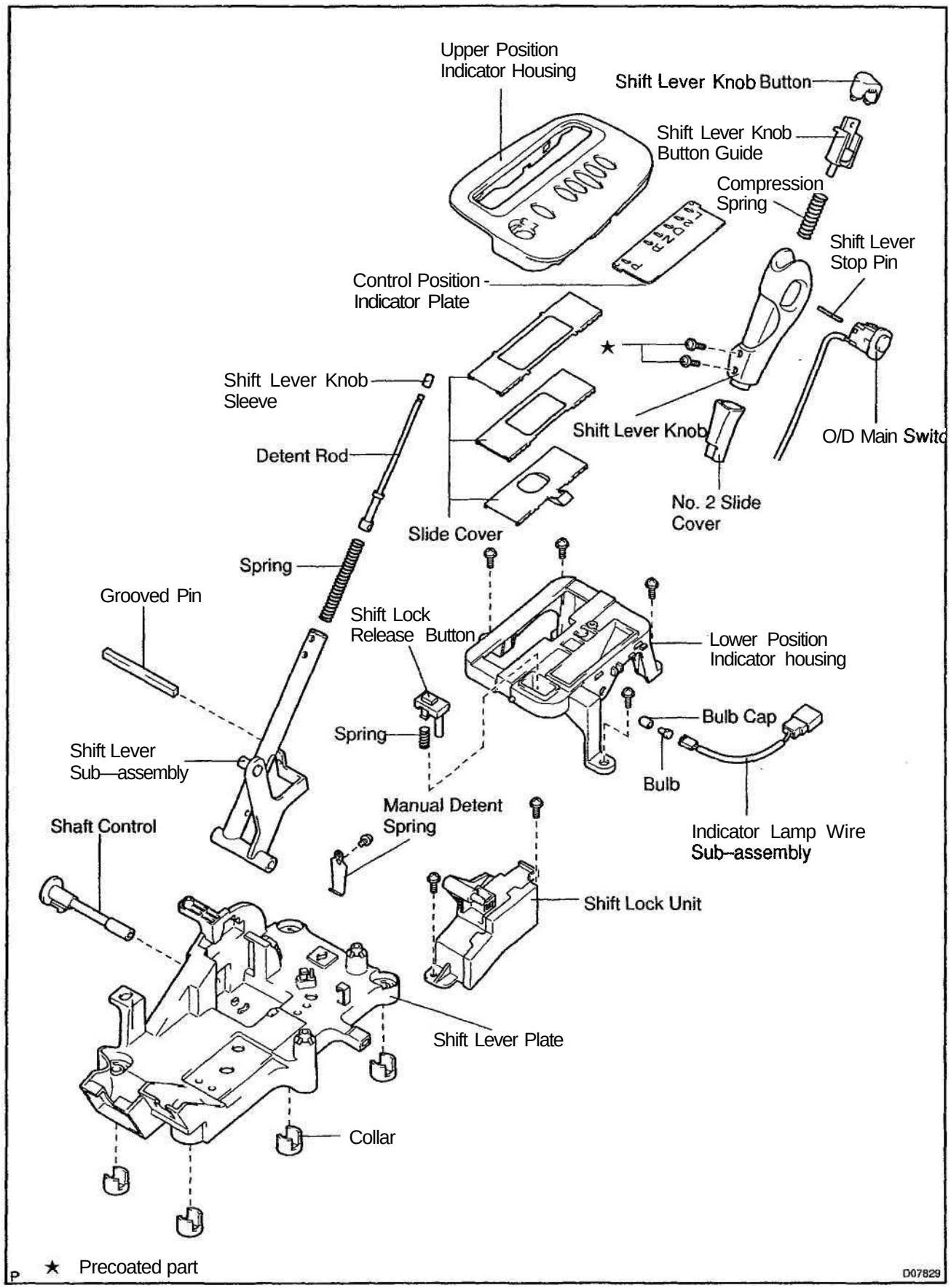
Upper Position Indicator Housing
Shift Lever Knob Button
Shift Lever Knob Button Guide
Compression Spring
Shift Lever Stop Pin
Control Position Indicator Plate
Shift Lever Knob Sleeve
Detent Rod
Shift Lever Knob
O/D Main Switch
No. 2 Slide Cover
Slide Cover
Spring
Grooved Pin
Shift Lock Release Button
Lower Position Indicator housing
Bulb Cap
Spring
Shift Lever Sub—assembly
Bulb
Manual Detent Spring
Indicator Lamp Wire Sub–assembly
Shaft Control
Shift Lock Unit
Shift Lever Plate
Collar
★ Precoated part
D07829

AXOL6-02

REMOVAL

1. **REMOVE INSTRUMENT PANEL (See page BO–79)**
2. **REMOVE AIR CONDITIONING UNIT (See page AC–26)**

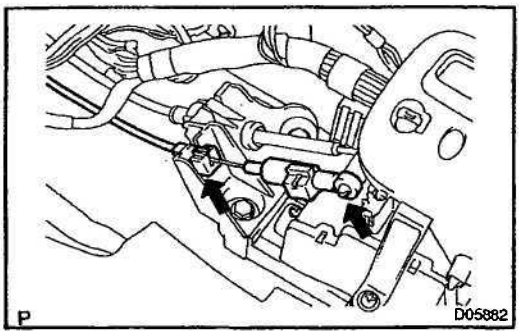

3. **REMOVE KEY INTERLOCK CABLE**

(a) Remove the cable end from the rod of the floor shift assembly.

(b) Pull out the cable while pressing the clip of the key interlock cable.

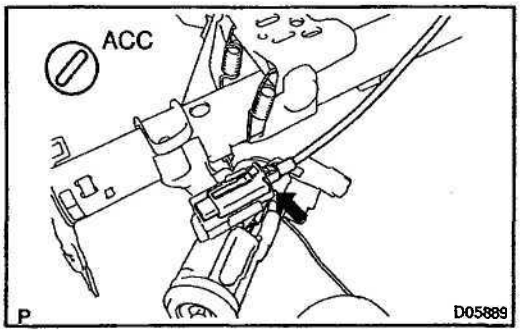

(c) With the key in ACC, remove the cable cap claw from the key interlock and pull it.

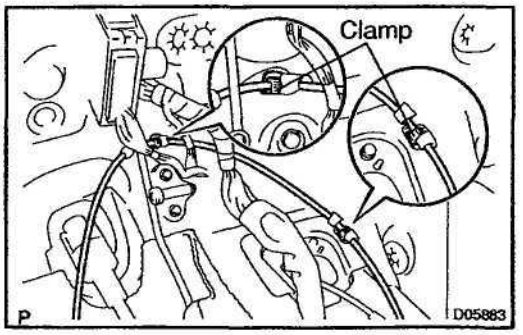

(d) Disconnect the 2 key interlock cable clamps.

4. **REMOVE FLOOR SHIFT ASSEMBLY**

(a) Disconnect the 2 connectors.

(b) Disconnect the 2 wire harness clamps from the floor shift assembly.

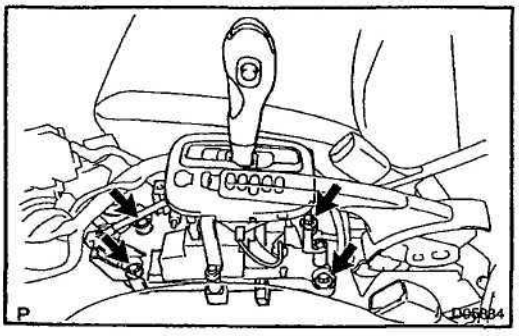

(c) Remove the 4 bolts from the floor shift assembly.

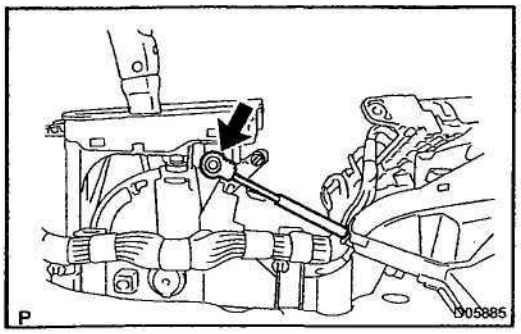

(d) Remove the cable end from the rod of the floor shift assembly.
(e) Pull out the cable while pressing the clip of the transaxle control cable.
(f) Remove the floor shift assembly.

AX0LC-01

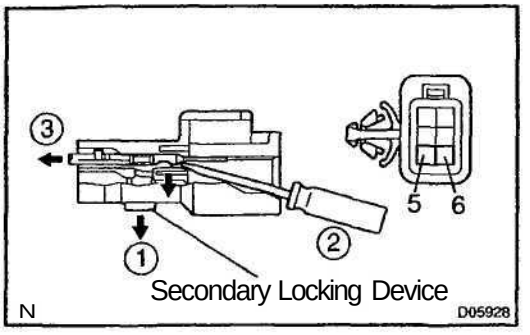

DISASSEMBLY

1. REMOVE O/D MAIN SWITCH TERMINAL

(a) Remove the O/D main switch connector from the shift lever plate.
(b) Disengage the secondary locking device.
(c) Release the locking log of the terminals 5 and 6, and pull the terminals out from the rearward.

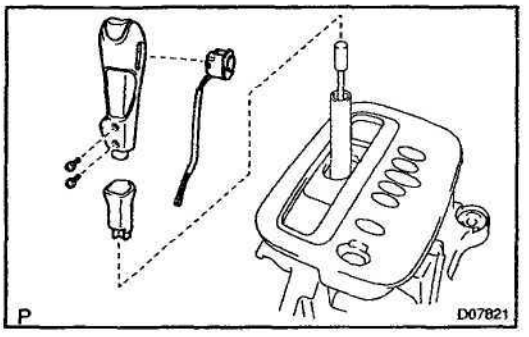

2. REMOVE SHIFT LEVER KNOB SUB–ASSEMBLY

(a) Remove the 2 screws and shift lever knob sub–assembly.

NOTICE:

Pay attention not to apply unnatural load to O/D main switch wire harness.

(b) Remove the O/D main switch.
(c) Remove the No. 2 slide cover.

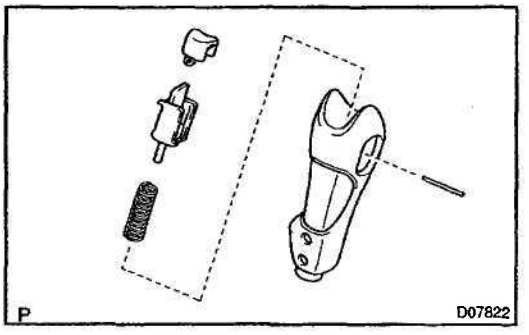

(d) Remove the shift lever stop pin, shift lever knob button, shift lever knob button guide and compression spring.

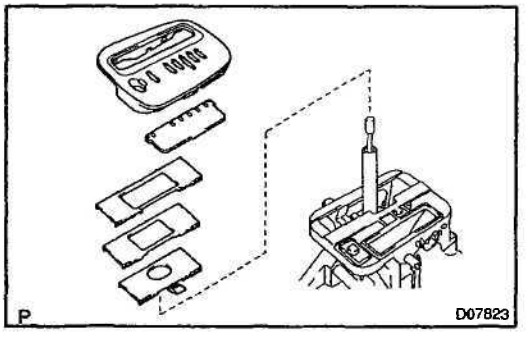

3. REMOVE UPPER POSITION INDICATOR HOUSING

(a) Remove the upper position indicator housing.
(b) Remove the control position indicator plate.
(c) Remove the 3 slide covers from the lower position indicator housing.

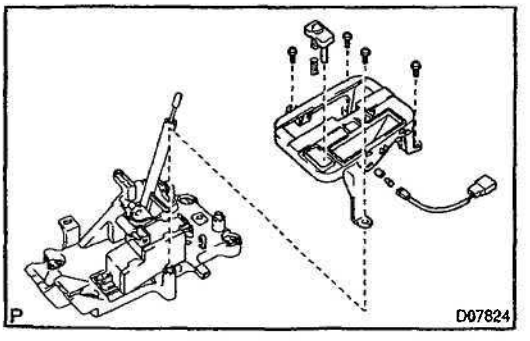

4. REMOVE LOWER POSITION INDICATOR HOUSING

(a) Remove the indicator lamp wire sub–assembly.
(b) Remove the 4 screws and lower position indicator housing.
(c) Remove the bulb cap and bulb from the indicator lamp wire sub–assembly.
(d) Remove the shift lock release button and spring.

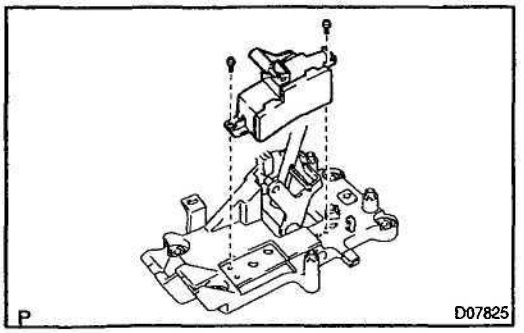

5. REMOVE SHIFT LOCK UNIT

Remove the 2 screws and shift lock unit.

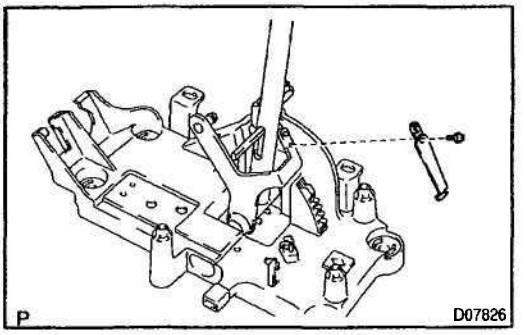

6. REMOVE SCREW AND MANUAL DETENT SPRING

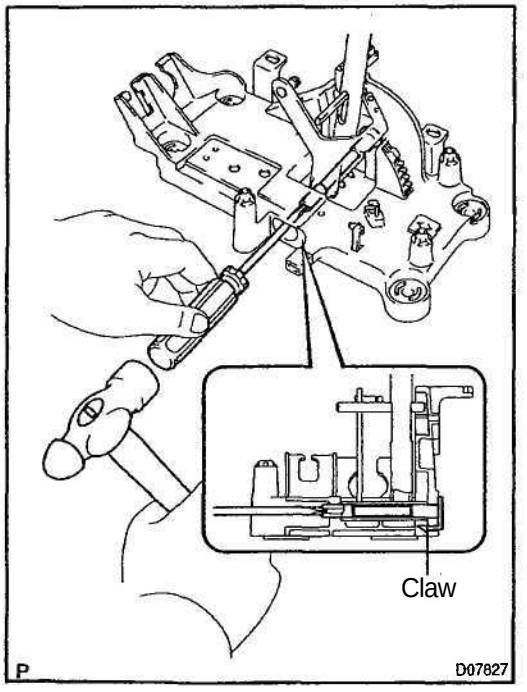

7. REMOVE SHIFT LEVER SUB-ASSEMBLY

Using a screwdriver and hammer, drive off the shaft control while disengaging the claw of the shaft control and remove the shift lever sub-assembly.

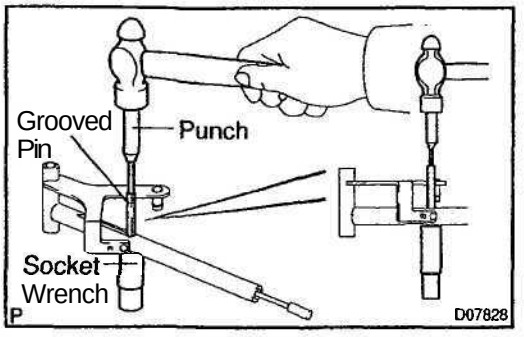

8. REMOVE DETENT ROD

(a) Set a 14 mm deep socket wrench.
(b) Using a punch and hammer, remove the grooved pin.
(c) Remove the detent rod and spring.
(d) Remove the shift lever knob sleeve from the detent rod.

9. REMOVE COLLARS

Using a screwdriver and hammer, remove the 4 collars.

REASSEMBLY

1. INSTALL 4 COLLARS

2. INSTALL DETENT ROD

(a) Install the shift lever knob sleeve to the detent rod.
(b) Apply MP grease on the detent rod and spring.
(c) Install the spring and detent rod.

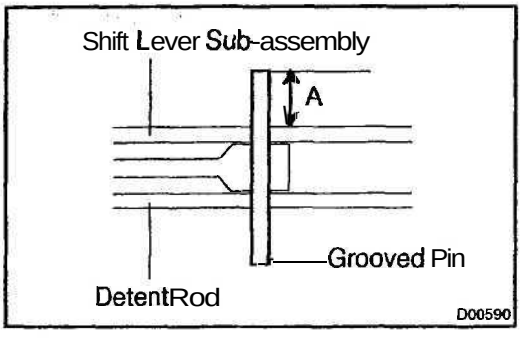

(d) Using a punch and hammer, install the grooved pin to the detent rod pin hole.
A: 8.0 ± 0.2 mm (0.315± 0.008 in.)
(e) Check the detent rod operation.

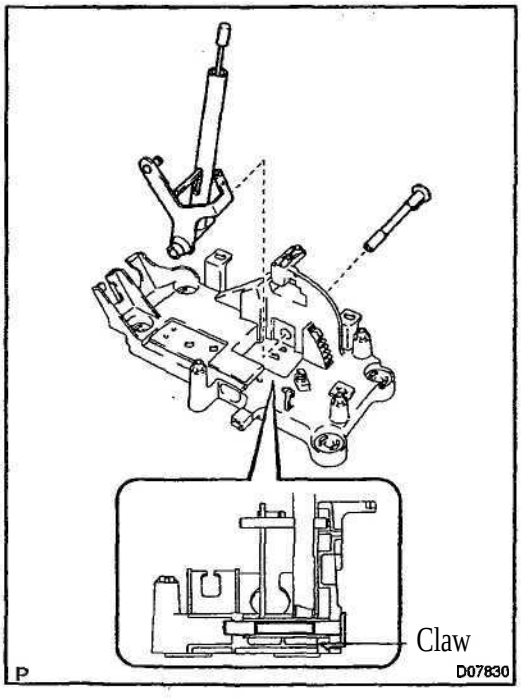

3. INSTALL SHIFT LEVER SUB–ASSEMBLY

(a) Apply MP grease on the spring.
(b) Install the shift lever sub–assembly and shaft control to shift lever plate.

HINT:
Check that the claw of the shaft control is fit onto the shift lever plate.

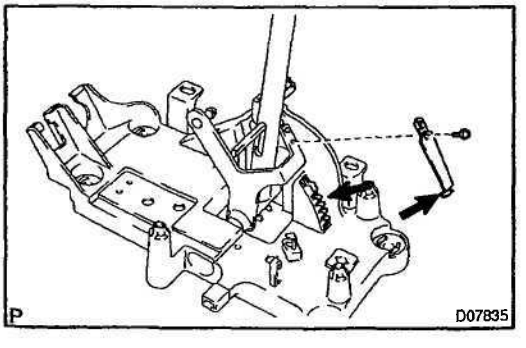

4. INSTALL MANUAL DETENT SPRING AND SCREW

(a) Apply MP grease to the parts indicated by the arrows manual detent spring and shift lever plate in the illustration.
(b) Install the manual detent spring with the screw.

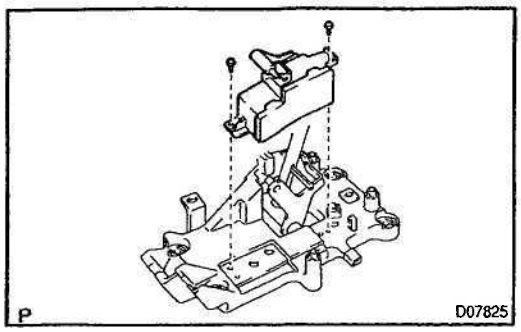

5. INSTALL SHIFT LOCK UNIT

Install the shift lock unit with the 2 screws.

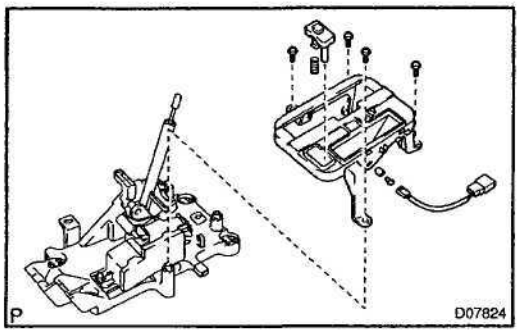

6. **INSTALL LOWER POSITION INDICATOR HOUSING**

(a) Apply MP grease on the spring.
(b) Install the spring and shift lock release button.
(c) Install the bulb and bulb cap to the indicator lamp wire sub–assembly.
(d) Install the lower position indicator housing with the 4 screws.
(e) Install the indicator lamp wire sub–assembly.

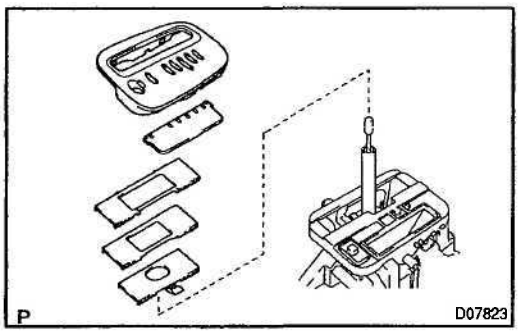

7. **INSTALL UPPER POSITION INDICATOR HOUSING**

(a) Install the 3 slide covers to the lower position indicator housing, as shown in the illustration.
(b) Install the control position indicator plate.
(c) Install the upper position indicator housing.

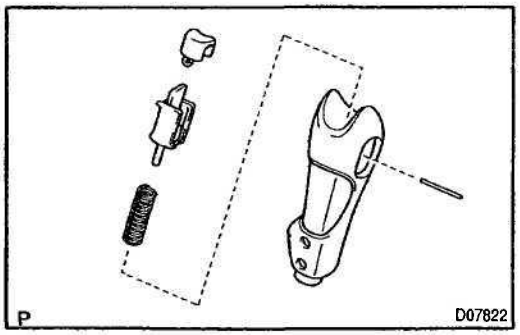

8. **INSTALL SHIFT LEVER KNOB SUB–ASSEMBLY**

(a) Apply MP grease on the compression spring.
(b) Install the compression spring, shift lever knob button guide, shift lever knob button and shift lever stop pin.

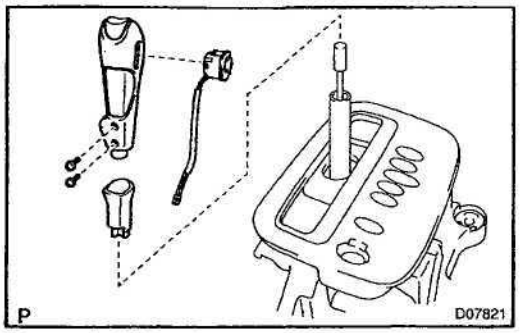

(c) Install the No. 2 slide cover.
(d) Install the O/D main switch
(e) Install the shift lever knob sub-assembly with the 2 screws.

HINT:

Coat the threads of screws with sealant.

Sealant:
Part No. 08833–00080, THREE BOND 1344, LOCTITE 242 or equivalent

NOTICE:

Make sure not to catch O/D main switch wire harness.

9. INSTALL O/D MAIN SWITCH TERMINAL

(a) Connect the 2 O/D main switch terminals to the connector.

(b) Connect the connector to the shift lever plate.

AX0L7-02

INSTALLATION

1. INSTALL FLOOR SHIFT ASSEMBLY

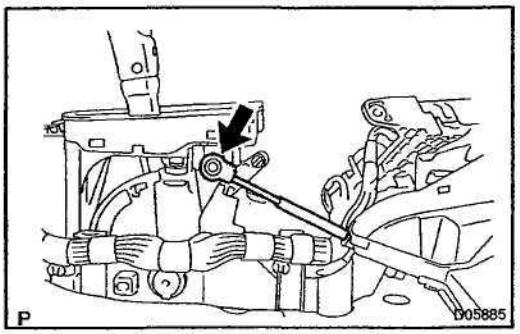

(a) Pull in the cable while pressing the clip of the transaxle control cable to the floor shift assembly.

(b) Install the cable end from the rod of the floor shift assembly.

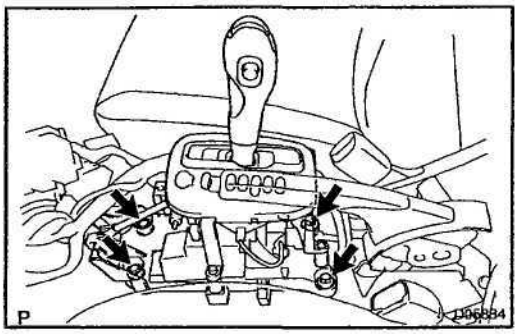

(c) install the floor shift assembly with the 4 bolts.
Torque: 12 N·m (120 kgf·cm, 9 ft·lbf)

(d) Connect the 2 wire harness clamps from the floor shift assembly.

(e) Connect the 2 connector.

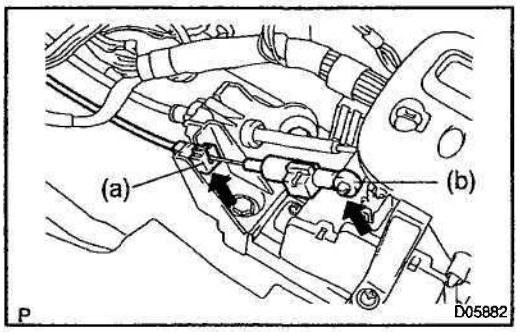

2. INSTALL KEY INTERLOCK CABLE

(a) Pass the key interlock cable end through the hole in the floor shift assembly.

HINT:

Make sure that the claws shown by the arrow in the illustration are locked.

(b) With the shift lever in N position, set the hole of the cable end to the floor shift assembly to assemble them.

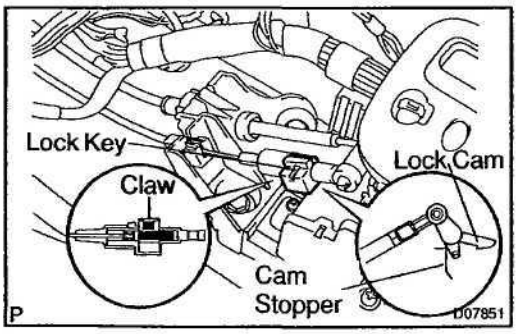

(c) At the time of reassembly:
With the key in ACC, push a claw into lock key.
At this time, be careful not to apply undue force on bending to the cable (Cable length adjustment is completed).

HINT:

Check that the key lock cam is contact with the cam stopper.

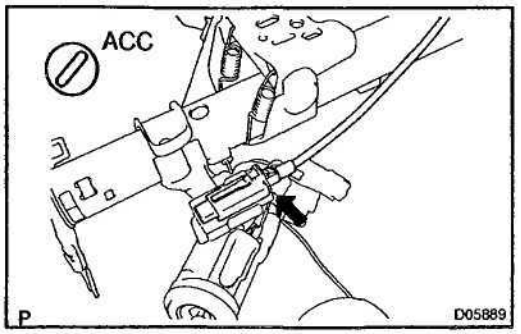

(d) With the key in ACC, install the cable cap claw to the key interlock.

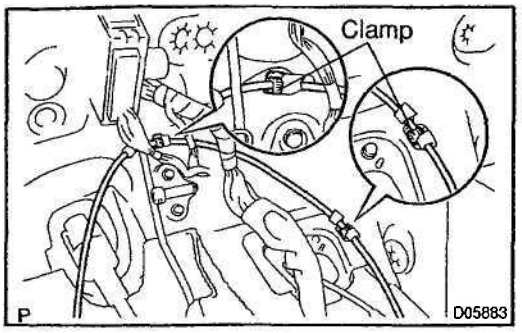

(e) Connect the 2 key interlock cable clamps.
(f) Pull in the cable while pressing the clip of the key interlock cable.

3. INSTALL AIR CONDITIONING UNIT (See page AC-29)

4. INSTALL INSTRUMENT PANEL (See page AC-29)

5. INSPECT KEY INTERLOCK AND SHIFT LOCK OPERATION

(a) Check that a key can be turn from ACC to LOCK only when the shift lever is in P position.
(b) Check that the key cannot be turned to LOCK when the shift lever is position in other than P position.
(c) When the ignition key is in LOCK, check that pressing the shift release button enables the shift lever to shift from P position to other positions.

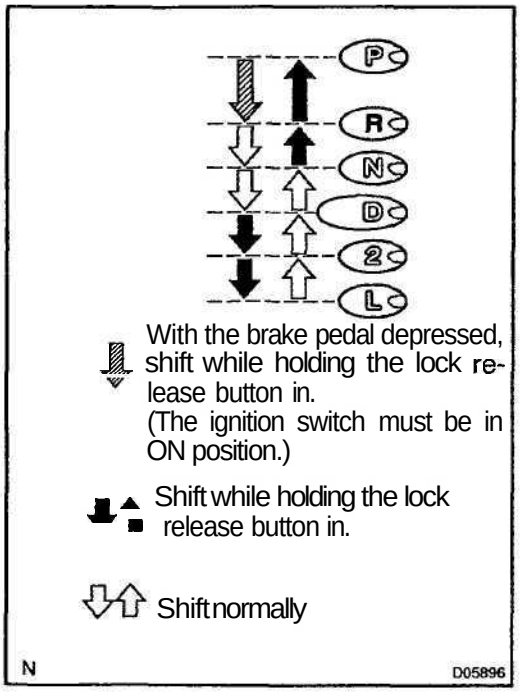

(d) When shifting it to each position, make sure that the shifting lever moves smoothly, can be moderately operated and the position indicator displays correctly.

Positions which can be operated without pressing the shift lever knob button

R → N → D → D, L → 2 → D → N

Positions which can be operated only while pressing the shift lever knob button

D → 2 → L, N → R → P

Positions which can be operated only while pressing the shift lever knob button, ignition switch ON and brake pedal depressed

P → R

(e) When starting the engine make sure that the vehicle moves forward when shifting form N to D position, and moves rearward when shifting to R position.

6. ADJUSTMENT IN CASE OF MALFUNCTION

(a) When the key can not be turned from ACC to LOCK even though the shift lever is in P position:
This is the condition where the cable end on the ignition key side is not returned to the position where it can be locked. The condition is caused by undue bending of the cable, rotative resistance of the pin on the shift lever side, or increased resistance due to any reason such as twisting of the cable. Reinstall and readjust the key interlock cable.

(b) When the key is turned from ACC to LOCK even though the shift lever is in other than P Position:
Since the cable is too long due to improper adjustment at the automatic adjustment part of the key can not be locked. Readjust the key interlock cable.

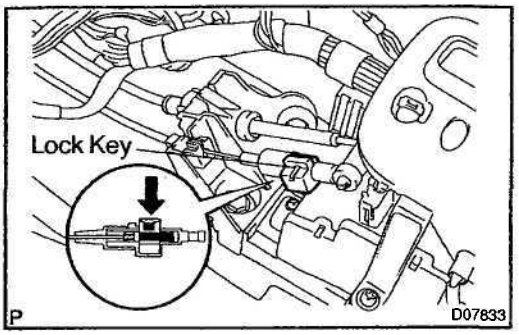

7. READJUSTMENT OF KEY INTERLOCK CABLE

HINT:

Assembly shall be undertaker in the same way as step 2.

(a) Using a screwdriver, unlock the claw of the lock key of the automatic adjustment part.

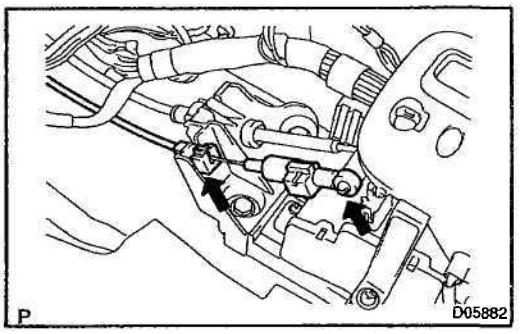

(b) Remove the key interlock cable end from the rod of the floor shift assembly.

(c) Pull out the cable while pressing the clip of the key interlock cable.

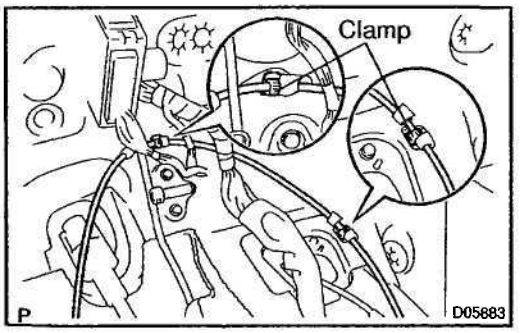

(d) Remove the cable clamp from the other.

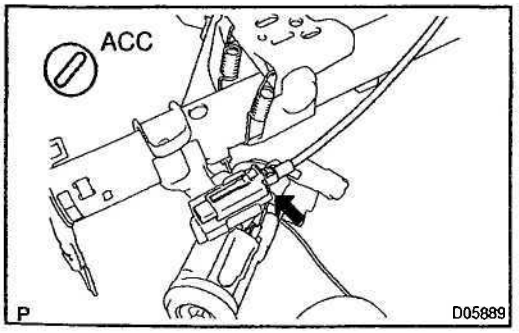

(e) With the key in ACC, install the cable cap claw to the key interlock.

AUTOMATIC TRANSAXLE UNIT

COMPONENTS

AX0L2-01

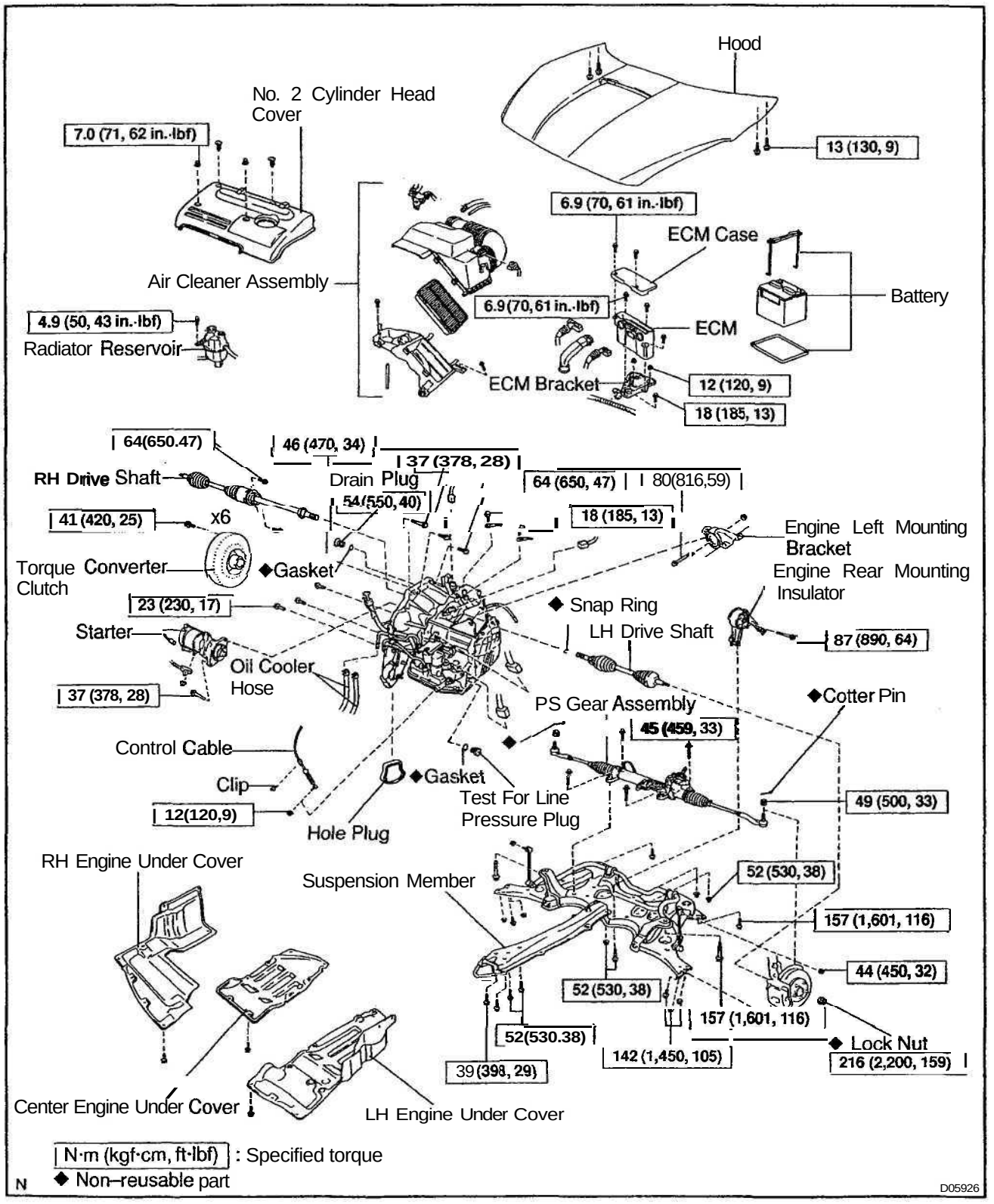

AX0L3-01

REMOVAL

1. **REMOVE HOOD**
   Torque: 13 N·m (130 kgf·cm, 9 ft·lbf)
2. **REMOVE BATTERY**
3. **REMOVE ECM AND ECM CASE**
   Torque: 6.9 N·m (70 kgf·cm, 61 in.·lbf)
4. **REMOVE ECM BRACKET**
   Torque:
   Bolt: 18 N·m (185 kgf cm, 13 ft·lbf)
   Nut: 12 N·m (120 kgf·cm, 9 ft·lbf)
5. **REMOVE AIR CLEANER ASSEMBLY**
6. **REMOVE NO. 2 CYLINDER HEAD COVER**
   Torque: 7.0 N-m (71 kgf·cm, 62 in.·lbf)

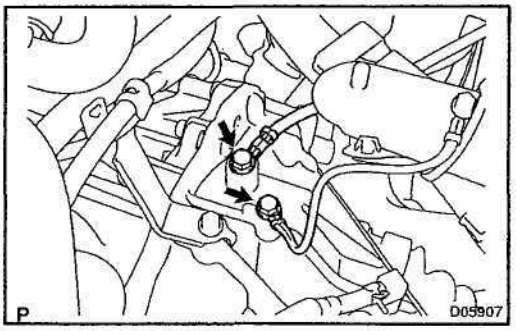

7. **REMOVE 2 GROUND CABLES**
   Torque: 18 N·m (185 kgf·cm, 13 tt-lbf)
8. **DISCONNECT CONTROL CABLE FROM CLAMP**
9. **DISCONNECT INPUT TURBINE SPEED SENSOR CONNECTOR**
10. **REMOVE VEHICLE SPEED SENSOR CONNECTOR**

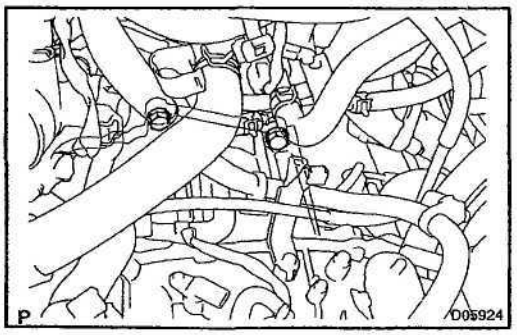

11. **REMOVE 2 UPPER SIDE TRANSAXLE MOUNTING BOLTS FROM TRANSAXLE**
    Torque: 64 N·m (650 kgf-cm, 47 ft·lbf)

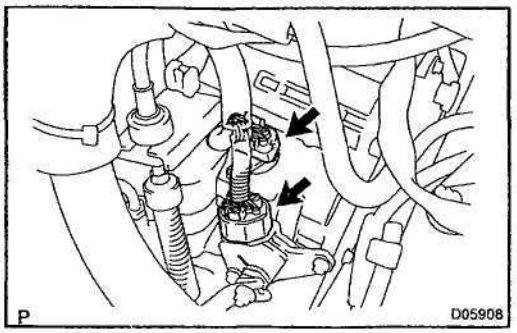

12. **DISCONNECT SOLENOID CONNECTOR AND PARK/NEUTRAL POSITION SWITCH CONNECTOR**

Disconnect the solenoid connector and park/neutral position switch connector.

13. **DISCONNECT CONTROL CABLE**

(a) Remove the nut from the control shift lever.
Torque: **12 N·m** (120 **kgf·cm,** 9 tt-lbf)

(b) Remove the clip and disconnect the control cable.

14. REMOVE BOLT AND DISCONNECT RADIATOR RESERVOIR
Torque: 4.9 **N·m** (50 **kgf·cm,** 43 **in.·lbf)**

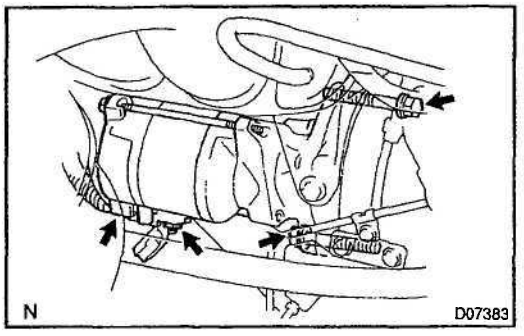

15. REMOVE STARTER
(a) Remove the nut and wire, and disconnect the connector.
(b) Remove the 2 bolts and starter.
Torque: 37 **N·m** (378 **kgf·cm,** 28 **ft·lbf)**
16. **REMOVE LH, RH, CENTER ENGINE UNDER COVERS**

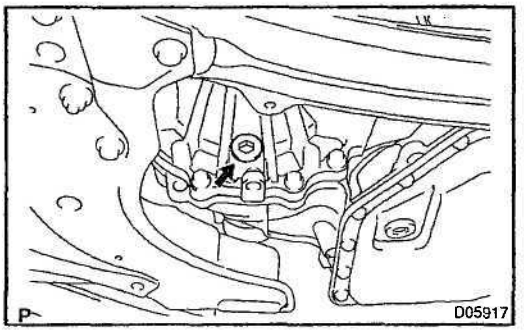

17. DRAIN ATF FROM FRONT DIFFERENTIAL CASE
Torque: 54 **N·m** (550 **kgf·cm,** 40 **ft·lbf)**
18. REMOVE LH AND RH DRIVE SHAFTS
(See page SA-20)

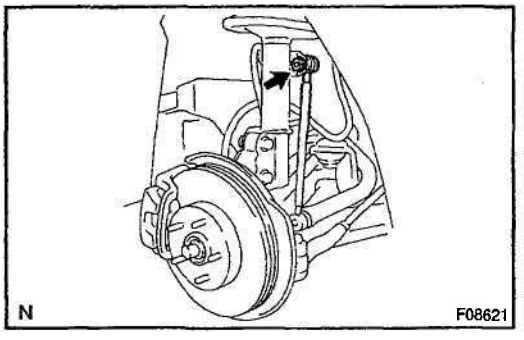

19. DISCONNECT LH AND RH STABILIZER BAR LINKS FROM SHOCK ABSORBER
Torque: 44 **N·m** (450 kgf-cm, 32 **ft·lbf)**

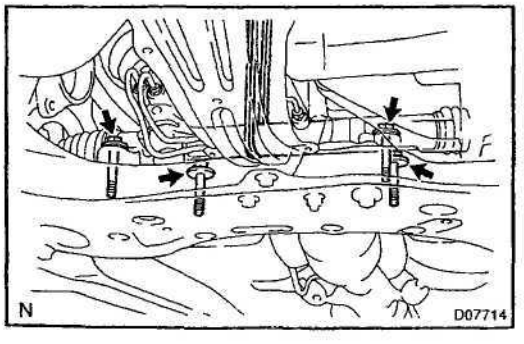

20. REMOVE 4 BOLTS AND DISCONNECT PS GEAR ASSEMBLY
HINT:
Support the PS gear assembly securely.
Torque: 45 **N·m** (459 **kgf**cm, 33 **ft·lbf)**

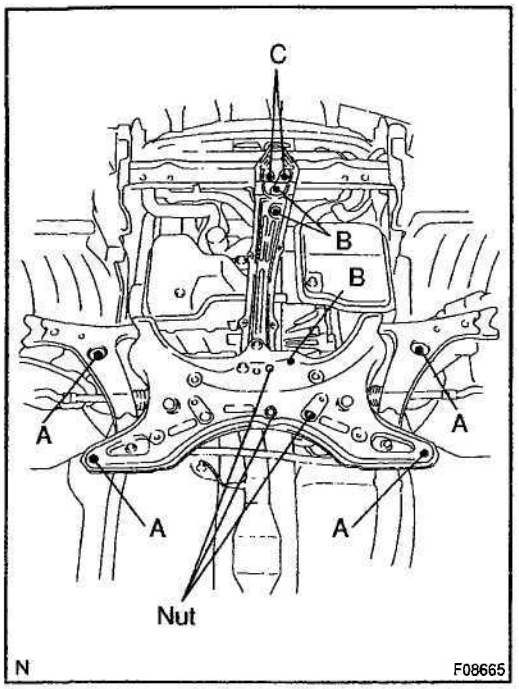

21. REMOVE SUSPENSION MEMBER

(a) Remove the 9 bolts and 3 nuts.

Torque:
Bolt A: 157 N·m (1,601 kgf·cm, 116 ft·lbf)
Bolt B: 52 N·m (530 kgf·cm, 38 ft lbf)
Bolt C: 39 N·m (398 kgf·cm, 29 ft·lbf)
Nut: 52 N·m (530 kgf·cm, 38 ft-lbf)

(b) Remove the suspension member.

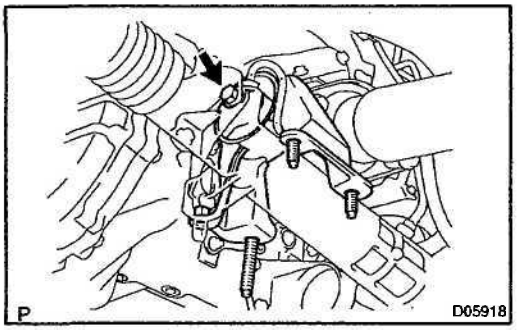

22. REMOVE ENGINE REAR MOUNTING INSULATOR

Remove the bolt and engine rear mounting insulator.

Torque: 87 N·m (890 kgf cm, 64 ft-lbf)

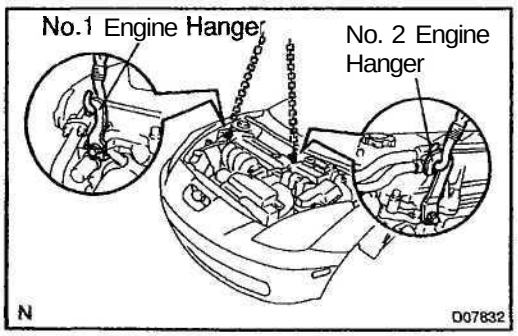

23. ATTACH ENGINE SLING DEVICE TO ENGINE HANGERS

(a) Disconnect the 2 PCV hoses.

(b) Install the No. 1 and No. 2 engine hangers in the correct direction.

Parts No. :
No. 1 engine hanger: 12281-22021
No. 2 engine hanger: 12281-15040 or 12281-15050
Bolt: 91512–B1016
Torque: 38 N·m (387 kgf·cm, 28 ft-lbf)

(c) Attach the engine chain hoist to the engine hangers.

CAUTION:
Do not attempt to hang the engine by hooking the chain to any other part.

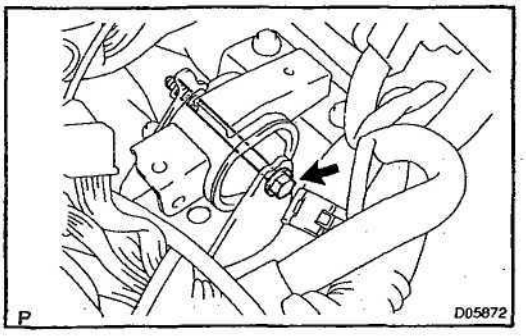

24. REMOVE UPPER SIDE ENGINE LEFT MOUNTING, NUT AND BOLT
Torque: 80 N·m (816 kgf·cm, 59 ft·lbf)

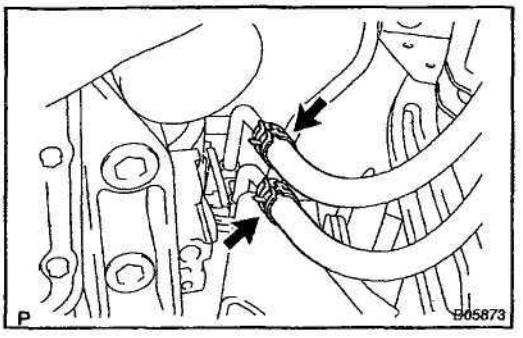

25. REMOVE OIL COOLER HOSE
Loosen the 2 clips and disconnect the 2 oil cooler hoses.

26. SUPPORT TRANSAXLE WITH A JACK

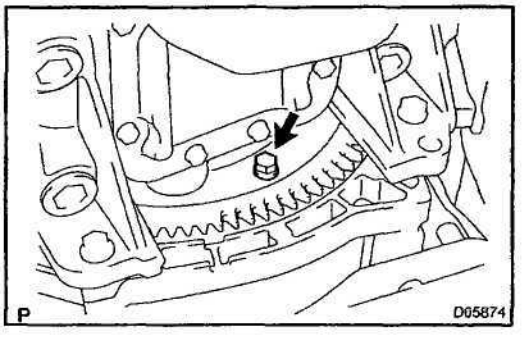

27. REMOVE TORQUE CONVERTER CLUTCH MOUNTING BOLT
(a) Remove the hole plug.
(b) Turn the crankshaft to gain access and remove the 6 bolts holding the crankshaft pulley set bolt with a wrench.
Torque: 41 N·m (420 kgf·cm, 25 ft·lbf)

HINT:
At the time of installation, please refer to the following item.
First install black colored bolt and then 5 other bolts.

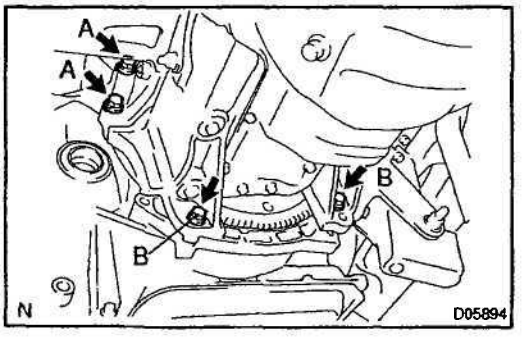

28. REMOVE TRANSAXLE ASSEMBLY
(a) Remove the 4 bolts.
Torque:
A bolt: 46 N·m (470 kgf·cm, 34 ft·lbf)
B bolt: 23 N·m (230 kgf·cm, 17 ft·lbf)
(b) Separate the transaxle from engine, and lower the transaxle.

AX0L4-01

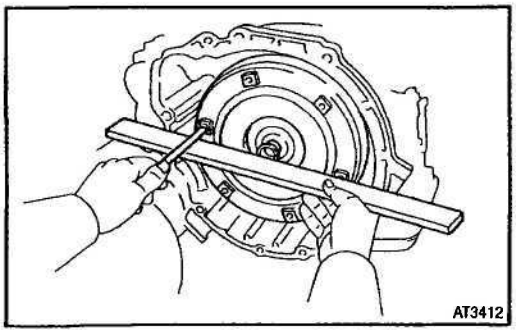

INSTALLATION

1. CHECK TORQUE CONVERTER CLUTCH INSTALLATION

Using calipers and a straight edge, measure the distance between the installed surface and the front surface of the transaxle housing.

Correct distance: More than 13.3 mm (0.524 in.)

2. TRANSAXLE INSTALLATION

Installation is in the reverse order of removal (See page AX–31).

HINT:

- After installation, adjust the shift control cable and park/neutral position switch (See page DI–220).
- Fill ATF and check the fluid level (See page DI-220).
- Perform the test drive of the vehicle.
- Adjust the hood (See page BO–9).

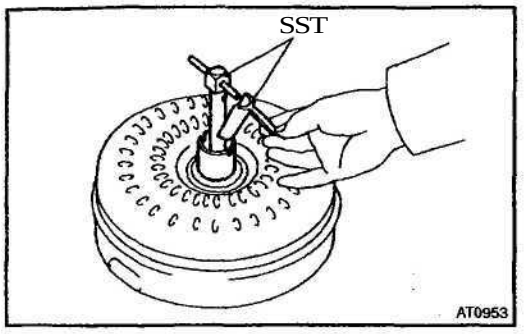

TORQUE CONVERTER CLUTCH AND DRIVE PLATE

AX09X-03

INSPECTION

1. INSPECT ONE-WAY CLUTCH

(a) Install SST into the inner race of the one–way clutch.
SST 09350–32014 (09351–32010)

(b) Install SST so that it fits in the notch of the converter hub and outer race of the one–way clutch.
SST 09350–32014 (09351-32020)

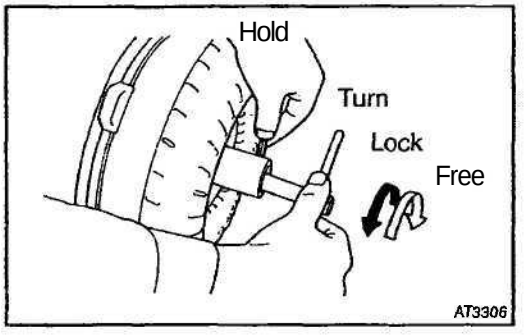

(c) With the torque converter clutch setting up on its side, check that the clutch locks when turned counterclockwise, and rotates smoothly clockwise.

If necessary, clean the converter and retest the clutch.
Replace the converter clutch if the clutch still fails the test.

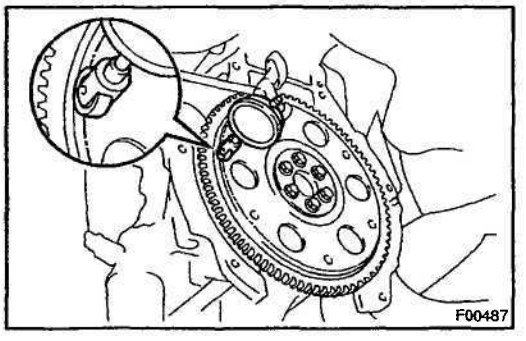

2. MEASURE DRIVE PLATE RUNOUT AND INSPECT RING GEAR

(a) Set up a dial indicator and measure the drive plate runout.

(b) Check the damage of the ring gear.

Maximum runout: 0.20 mm (0.0079 in.)

If the runout is not within the specification or ring gear is damaged, replace the drive plate.

Torque: 78 N·m (800 kgf cm, 58 ft·lbf)

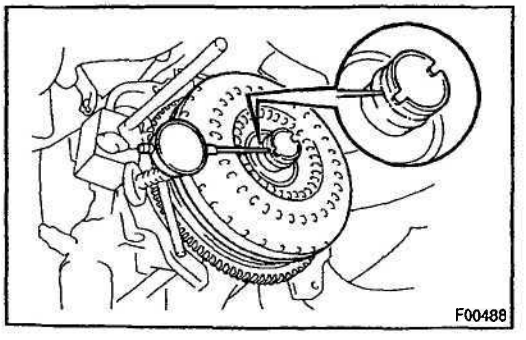

3. MEASURE TORQUE CONVERTER CLUTCH SLEEVE RUNOUT

Temporarily mount the torque converter clutch on the drive plate. Set a dial indicator and measure the torque converter clutch sleeve runout.

Maximum runout: 0.30 mm (0.0118 in.)

If the runout is not within the specification, try to correct by reorienting the installation of the converter.

HINT:

Mark the position of the converter clutch to ensure the installation is correctly performed.

– MEMO –

SUSPENSION AND AXLE

TROUBLESHOOTING SA–1
TIRE AND WHEEL SA–2
FRONT WHEEL ALIGNMENT SA–4
REAR WHEEL ALIGNMENT SA–8
FRONT AXLE HUB SA–11
FRONT WHEEL HUB BOLT SA–17
FRONT DRIVE SHAFT SA–18
FRONT SHOCK ABSORBER SA-33
FRONT LOWER SUSPENSION ARM SA–41
FRONT LOWER BALL JOINT SA–46
FRONT STABILIZER BAR SA–50
REAR AXLE CARRIER SA–54
REAR WHEEL HUB BOLT SA–60
REAR SHOCK ABSORBER SA–61
REAR UPPER SUSPENSION ARM SA–68
REAR LOWER SUSPENSION ARM SA–71
REAR STABILIZER BAR SA–75

SA

TROUBLESHOOTING

PROBLEM SYMPTOMS TABLE

SA0CB-05

Use the table below to help you find the cause of the problem. The numbers indicate the priority of the likely cause of the problem. Check each part in order. If necessary, replace these parts.

Symptom	Suspect Area	See page
Wander/pulls	1. Tire (Worn or improperly inflated)	SA–2
	2. Wheel alignment (Incorrect)	SA–4
		SA–8
	3. Steering linkage (Loose or worn)	–
	4. Hub bearing (Worn)	SA–12
		SA–55
	5. Steering gear (Out of adjustment or broken)	SR–33
	6. Suspension parts (Worn)	–
Bottoming	1. Vehicle (Overloaded)	–
	2. Spring (Weak)	SA–33
		SA–61
	3. Shock absorber (Worn)	SA–36
		SA–64
Sways/pitches	1. Tire (Worn or improperly inflated)	SA–2
	2. Stabilizer bar (Bent or broken)	SA–50
		SA–75
	3. Shock absorber (Worn)	SA–36
		SA–64
Front wheel shimmy	1. Tire (Worn or improperly inflated)	SA-2
	2. Wheel (Out of balance)	SA-2
	3. Shock absorber (Worn)	SA-36
	4. Wheel alignment (Incorrect)	SA–4
	5. Ball joint (Worn)	SA–48
	6. Hub bearing (Worn)	SA–12
	7. Steering linkage (Loose or worn)	–
	8. Steering gear (Out of adjustment or broken)	SR–33
Abnormal tire wear	1. Tire (Worn or improperly inflated)	SA-2
	2. Wheel alignment (Incorrect)	SA–4
	3. Shock absorber (Worn)	SA–36
		SA–64
	4. Suspension parts (Worn)	–

SA

TIRE AND WHEEL

SA1P0-01

INSPECTION

1. INSPECT TIRE

(a) Check the tires for wear and proper inflation pressure.

Cold tire inflation pressure

1ZZ-FE engine models:

Tire size	Front kPa (kgf/cm², psi)	Rear kPa (kgf/cm², psi)
195/60R15 88H P195/60R15 87H	210 (2.1, 29)	210 (2.1, 29)

2ZZ-GE engine models:

Tire size	Front kPa (kgf/cm², psi)	Rear kPa (kgf/cm², psi)
205/55R15 87V P205/55R15 87V 205/50R16 87V	220 (2.2, 32)	220 (2.2, 32)

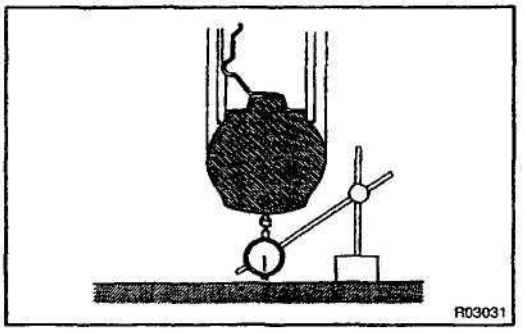

(b) Using a dial indicator, check the tire runout.
Tire runout: 1.0 mm (0.039 in.) or less

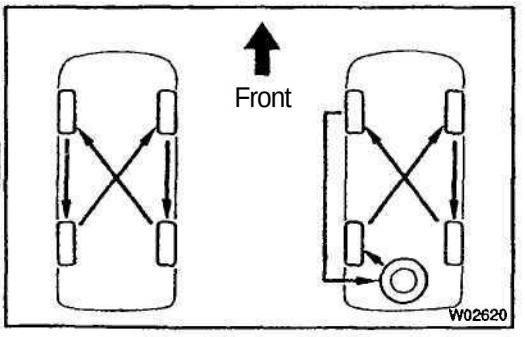

2. ROTATING TIRES

HINT:

See the illustration for where to rotate each tire when you include the spare tire in the rotation and when you do not.

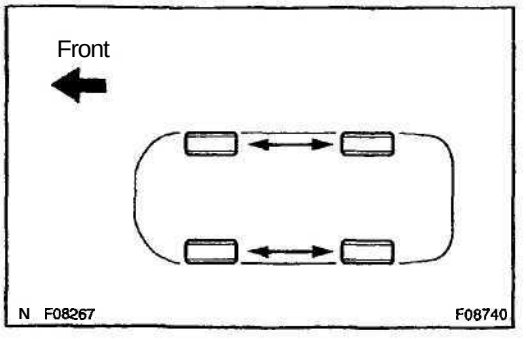

If the rotating direction is specified, do not exchange the tires between the right and left.

SA

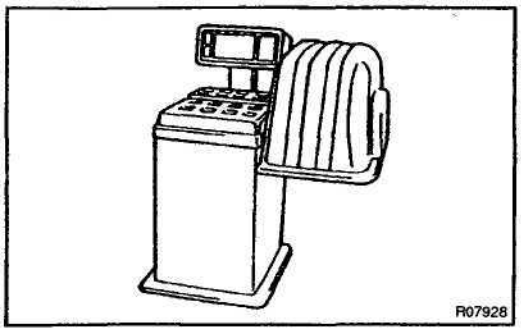

3. INSPECT WHEEL BALANCE

(a) Check and adjust the Off–the–car balance.

(b) If necessary, check and adjust the On–the–car balance.

Imbalance after adjustment: 8.0 g (0.018 lb) or less

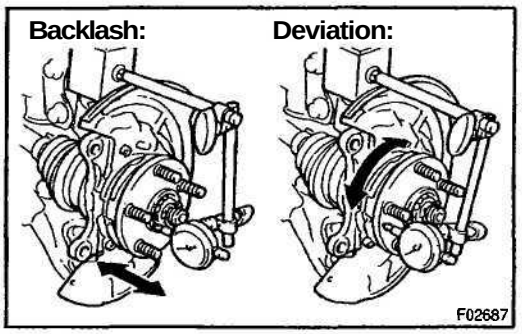

4. CHECK WHEEL BEARING LOOSENESS

(a) Using a dial indicator, check the backlash near the center of the axle hub.

Maximum: 0.05 mm (0.0020 in.)

If the backlash exceeds the maximum, replace the bearing.

(b) Using a dial indicator, check the deviation at the surface of the axle hub outside the hub bolt.

Maximum: 0.07 mm (0.0028 in.)

If the deviation exceeds the maximum, replace the axle hub.

5. CHECK FRONT SUSPENSION FOR LOOSENESS

6. CHECK STEERING LINKAGE FOR LOOSENESS

7. CHECK BALL JOINT FOR LOOSENESS

8. CHECK SHOCK ABSORBER WORKS PROPERLY

- Check that oil leaks
- Check mounting bushings for wear
- Bounce front and rear of the vehicle

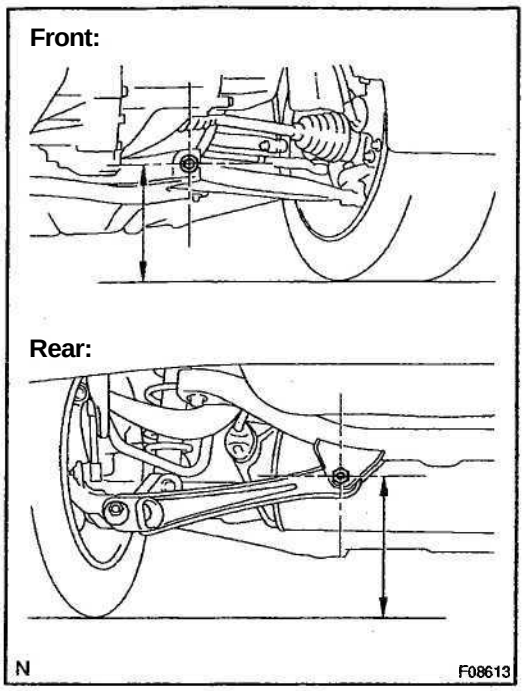

FRONT WHEEL ALIGNMENT INSPECTION

SA1CK-04

1. MEASURE VEHICLE HEIGHT

Vehicle height:

Tire size	Front*1 mm (in.)	Rear*2 mm (in.)
195/60R15, P195/60R15	190 (7.48)	224 (8.82)
205/55R15, P205/55R15	190 (7.48)	226 (8.90)
205/50R16	193 (7.60)	225 (8.86)

*1: Front measuring point
Measure the distance from the ground to the center of the front side lower suspension arm mounting bolt.
*2: Rear measuring point
Measure the distance from the ground to the center of the rear side lower suspension arm suspension member side set bolt.

NOTICE:

Before inspecting the wheel alignment, adjust the vehicle height to the specified value.

If the vehicle height is not the specified value, try to adjust it by pushing down on or lifting the body.

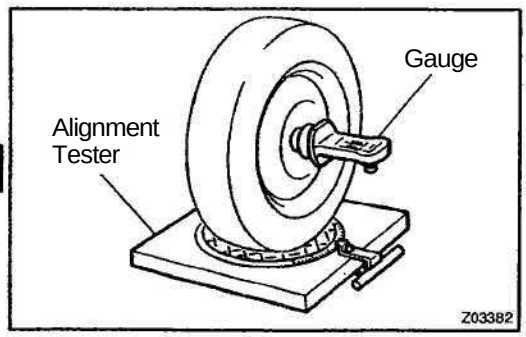

SA

2. INSTALL CAMBER–CASTER–KINGPIN GAUGE OR POSITION VEHICLE ON WHEEL ALIGNMENT TESTER

Follow the specific instructions of the equipment manufacturer.

3. INSPECT CAMBER, CASTER AND STEERING AXIS INCLINATION

Camber, caster and steering axis inclination:
195/60R15, P195/60R15 tire:

Camber	–0°28' ± 45' (–0.47° ± 0.75°)
Right–left error	45' (0.75°) or less
Caster	2°07' ± 45' (2.12° ± 0.75°)
Right–left error	45' (0.75°) or less
Steering axis inclination	13°09' ± 45' (13.15° ± 0.75°)
Right–left error	45' (0.75°) or less

205/55R15, P205/55R15 tire:

Camber	–0°25' ± 45' (–0.42° ± 0.75°)
Right–left error	45' (0.75°) or less
Caster	2°01' ± 45' (2.02° ± 0.75°)
Right–left error	45' (0.75°) or less
Steering axis inclination	13°04' ± 45' (13.07° ± 0.75°)
Right–left error	45' (0.75°) or less

205/50R16 tire:

Camber	–0°29' ± 45' (–0.48° ± 0.75°)
Right–left error	45' (0.75°) or less
Caster	2°02' ± 45' (2.03° ± 0.75°)
Right–left error	45' (0.75°) or less
Steering axis inclination	13°12' ± 45' (13.20° ± 0.75°)
Right–left error	45' (0.75°) or less

If the caster and steering axis inclination are not within the specified values, after the camber has been correctly adjusted, recheck the suspension parts for damaged and/or worn out parts.

4. ADJUST CAMBER

NOTICE:

After the camber has been adjusted, inspect the toe–in.

(a) Remove the front wheel.

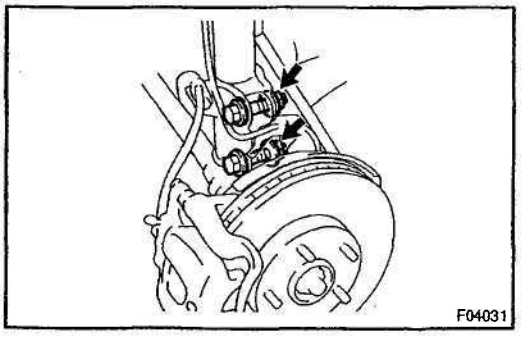

(b) Remove the 2 nuts on the lower side of the shock absorber.

(c) Coat the threads of the nuts with engine oil.

(d) Temporarily install the 2 nuts.

SA

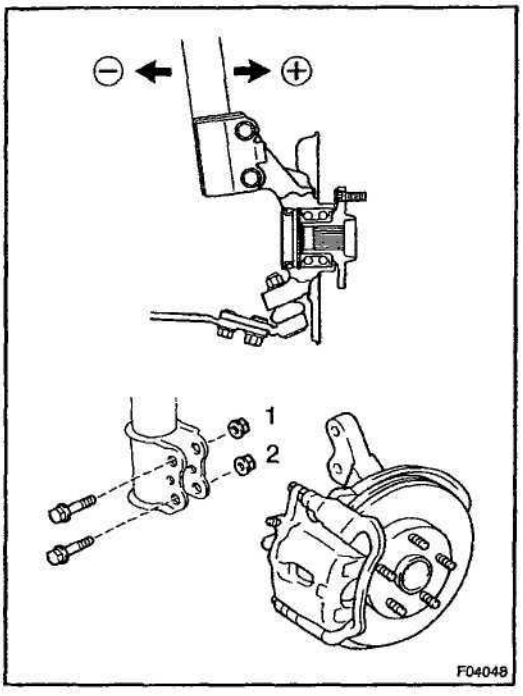

(e) Adjust the camber by pushing or pulling the lower side of the shock absorber in the direction in which the camber adjustment is required.

(f) Tighten the nuts.
Torque: 153 N m (1,560 kgf·cm, 113 ft·lbf)

(g) Install the front wheel.
Torque: 103 N·m (1,050 kgf·cm, 76 ft·lbf)

(h) Check the camber.

HINT:

- Try to adjust the camber to the center of the specified value.
- Adjusting value for the set bolts is 6' - 30' (0.1 ° - 0.5°).

If the camber is not within the specified value, using the following table, estimate how much additional camber adjustment will be required, and select the camber adjusting bolt.

Bolt / Adjusting Value	Set Bolt		Adjusting Bolt					
	90105–15001		90105–15004		90105–15005		90105–15006	
			1 Dot		2 Dots		3 Dots	
	1	2	1	2	1	2	1	2
15'	●			●				
30'	●					●		
45'	●							●
1°00'			●					●
1°15'					●			●
1°30'							●	●

F01195

SA

(i) Do the steps mentioned above again. Between step (b) and (c), replace 1 or 2 selected bolts.

HINT:

When replacing the *2* bolts, replace 1 bolt for each time.

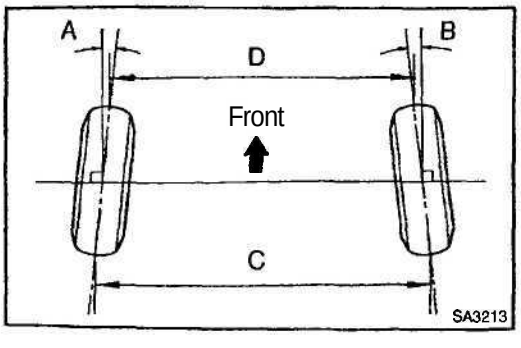

5. INSPECT TOE-IN

Toe-in:

Toe-in (total)	A + B: 0° ± 12' (0° ± 0.2°) C - D: 0 ± 2 mm (0 ± 0.08 in.)

If the toe-in is not within the specified value, adjust it at the rack ends.

6. ADJUST TOE-IN

(a) Remove the rack boot set clips.

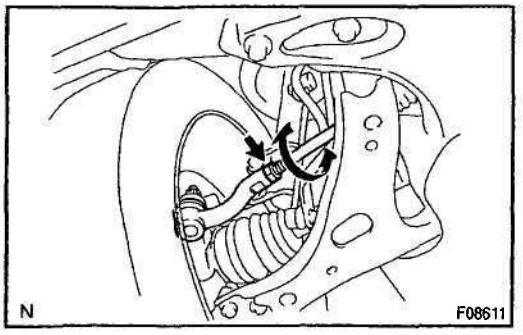

(b) Loosen the tie rod end lock nuts.
(c) Turn the right and left rack ends by an equal amount to adjust the toe-in.

HINT:
Try to adjust the toe-in to the center of the specified value.

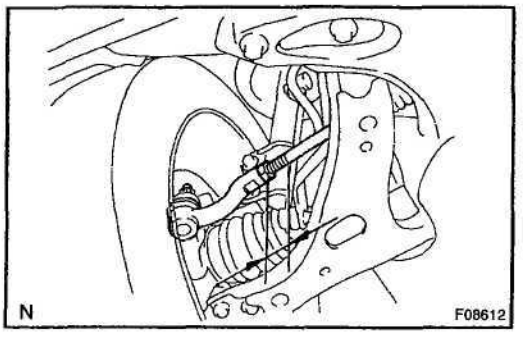

(d) Make sure that the lengths of the right and left rack ends are the same.
Rack end length difference: 1.5 mm (0.059 in.) or less
(e) Torque the tie rod end lock nuts.
Torque: 74 N·m (750 kgf·cm, 54 ft·lbf)
(f) Place the boots on the seats and install the clips.

HINT:
Make sure that the boots are not twisted.

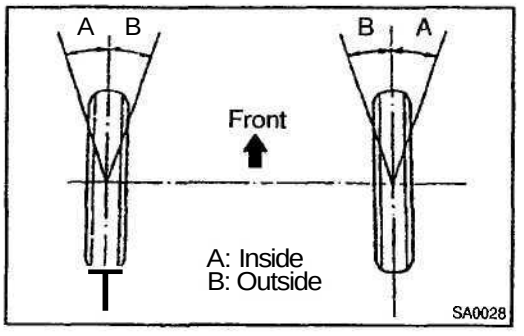

7. INSPECT WHEEL ANGLE

Turn the steering wheel fully, and measure the turning angle.

Wheel turning angle:

195/60R15, P195/60R15 tire:

Inside wheel	38°41' ± 2° (38.68° ± 2°)
Outside wheel: Reference	33°20' (33.33°)

205/55R15, P205/55R15 tire:

Inside wheel	38°46' ± 2° (38.77° ± 2°)
Outside wheel: Reference	33°25' (33.42°)

205/50R16 tire:

Inside wheel	38°38' ± 2° (38.63° ± 2°)
Outside wheel: Reference	33°19' (33.32°)

If the right and left inside wheel angles differ from the specified value, check the right and left rack end lengths.

SA

REAR WHEEL ALIGNMENT

SA1QZ-01

INSPECTION

1. **MEASURE VEHICLE HEIGHT (See page SA–4)**
2. **INSTALL CAMBER-CASTER-KINGPIN GAUGE OR POSITION VEHICLE ON WHEEL ALIGNMENT TESTER**

Follow the specific instructions of the equipment manufacturer.

3. **INSPECT CAMBER**

Camber:

Camber	–1°11' ± 45' (–1.18° ±0.75°)
Right–left error	45' (0.75°) or less

If the camber is not within the specified value, after the toe–in is inspected, see step 5. to adjust.

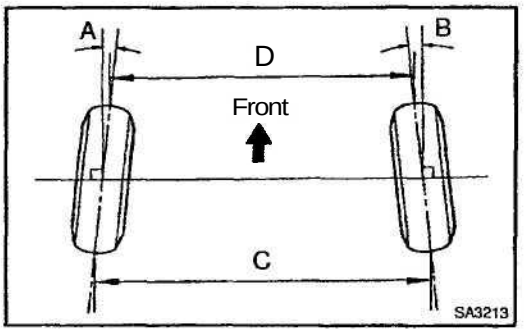

4. **INSPECT TOE-IN**

Toe–in:

Toe–in (total)	A + B: 0°18' ± 12' (0.3° ± 0.2°) C - D: 3 ± 2 mm (0.12 ± 0.08 in.)

If the toe–in is not within the specified value, see step 5. to adjust.

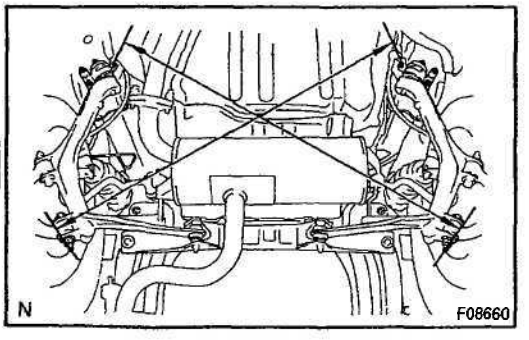

5. **ADJUST CAMBER AND TOE-IN**

(a) Measure the distance from the LH lower suspension arm bracket set bolt to the RH axle carrier rear side set bolt as shown in the illustration.

(b) Employ the same manner to the RH–LH.

Length difference: 6 mm or less

If it exceeds the specified value, adjust it by turning the adjusting cams.

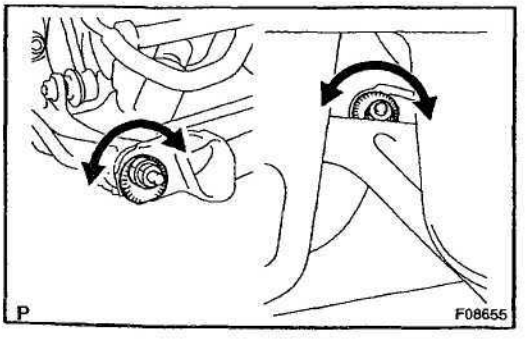

(c) Loosen the upper and lower arm adjusting cam set nuts.

(d) Adjust the camber and toe–in by turning the adjusting cams.

HINT:

Try to adjust the camber and toe–in to the center of the specified values.

(e) Torque the upper and lower arm adjusting cam set nuts.

Torque: 74 N·m (755 kgf cm, 55 ft·lbf)

SA

6. HOW TO READ ADJUSTMENT CHART (EXAMPLE)

(a) Measure the present alignment.

Example:
Camber (RH): –0°26' (–0.43°)
Camber (LH): -1°56' (–1.93°)
Toe–in (total): IN 7 mm (0.28 in.)

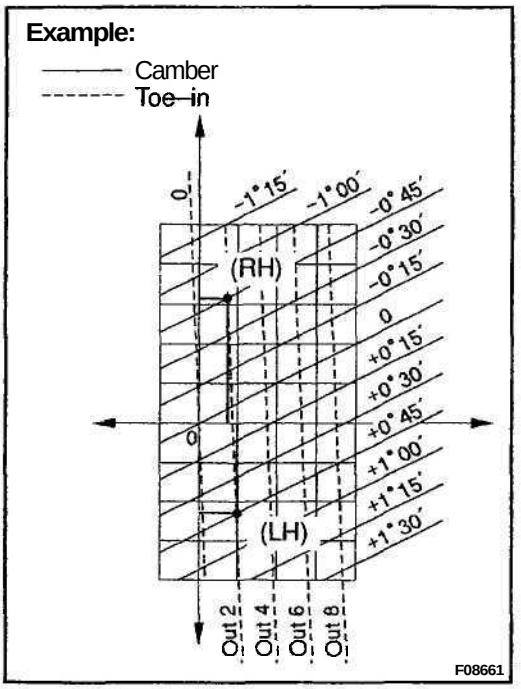

(b) Mark the difference between the standard value (A) and the measured value (B) on the adjustment chart.

Standard value:
Camber: –1°11' (–1.18°)
Toe–in (total): IN 3mm (0.12 in.)
Formula: A - B = C
Camber (RH): –1°11' – (–0°26') = –0°45'
Camber (LH): –1°11' – (-1°56') = 0°45'
Toe–in (total): IN3 - IN7 = OUT 4
Toe–in (each side): OUT 2

(c) As shown in the example chart, read the distance from the marked point to the origin of the chart, and adjust the upper and/or lower arm adjusting cams accordingly

Amount to turn adjusting cams (by graduation):
Upper arm cam (RH): + (Inward) 3.2
Lower arm cam (RH): + (Inward) 0.8
Upper arm cam (LH): - (Outward) 2.3
Lower arm cam (LH): + (Inward) 1.0

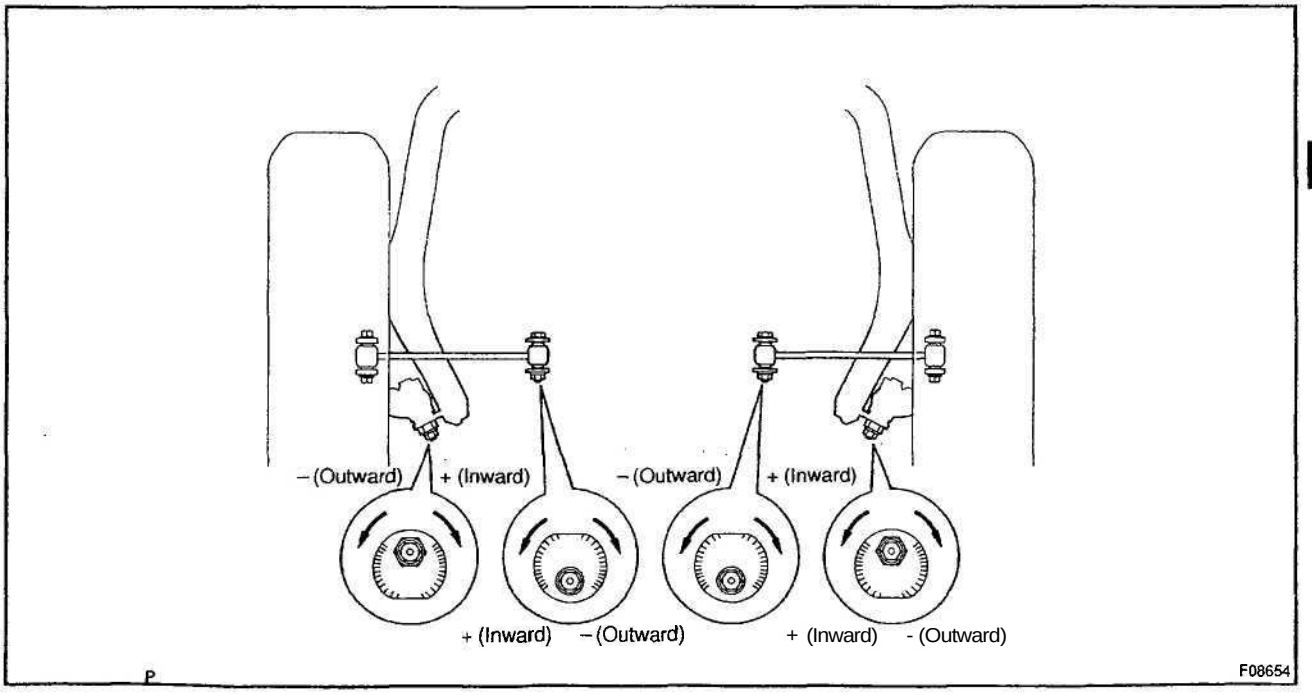

SA

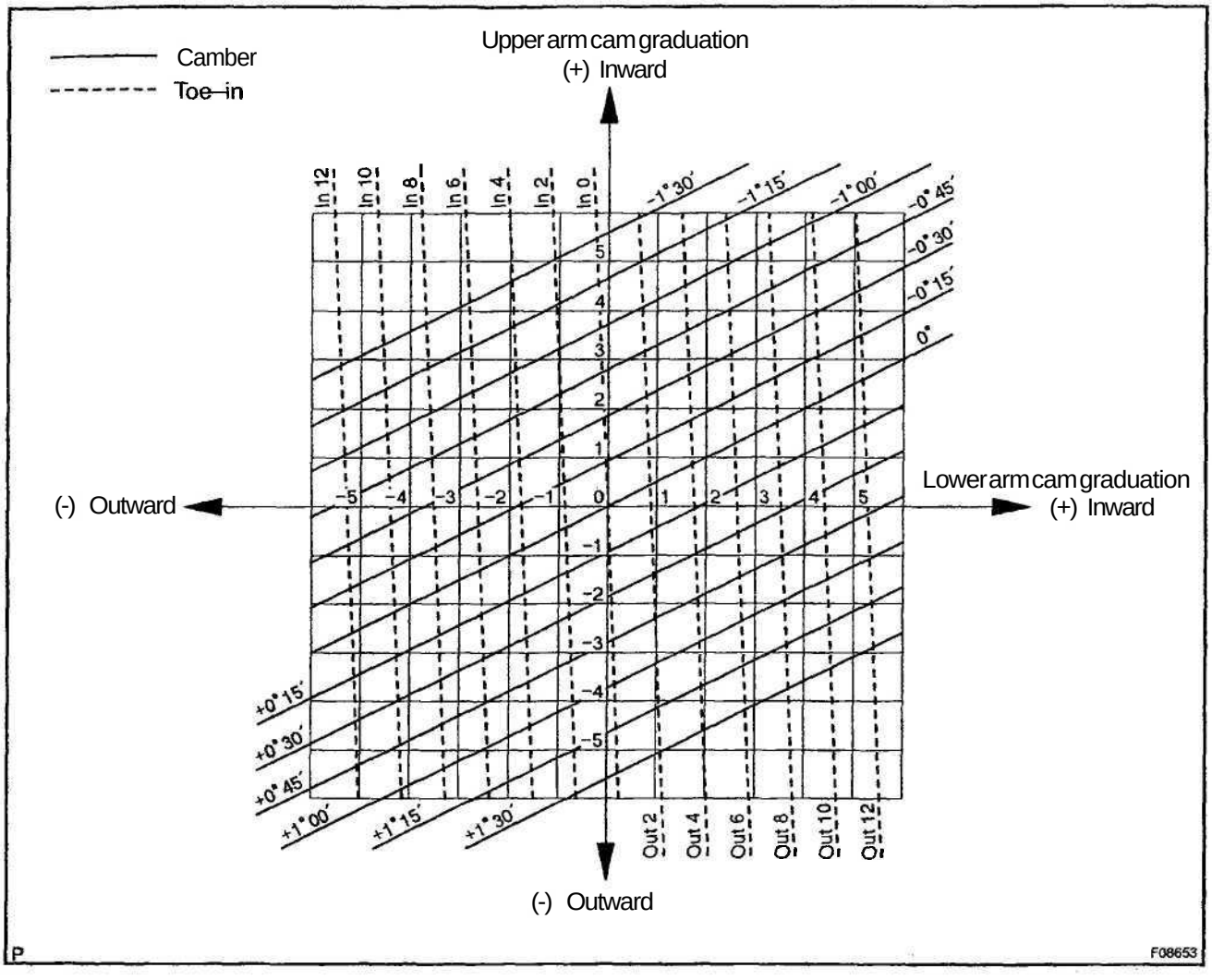
Camber
Toe–in
Upper arm cam graduation
(+) Inward
(-) Outward
Lower arm cam graduation
(+) Inward
(-) Outward
In 12
In 10
In 8
In 6
In 4
In 2
In 0
Out 2
Out 4
Out 6
Out 8
Out 10
Out 12
-1°30'
-1°15'
-1°00'
-0°45'
-0°30'
-0°15'
0°
+0°15'
+0°30'
+0°45'
+1°00'
+1°15'
+1°30'
P
F08653

SA

FRONT AXLE HUB

COMPONENTS

SA07B-06

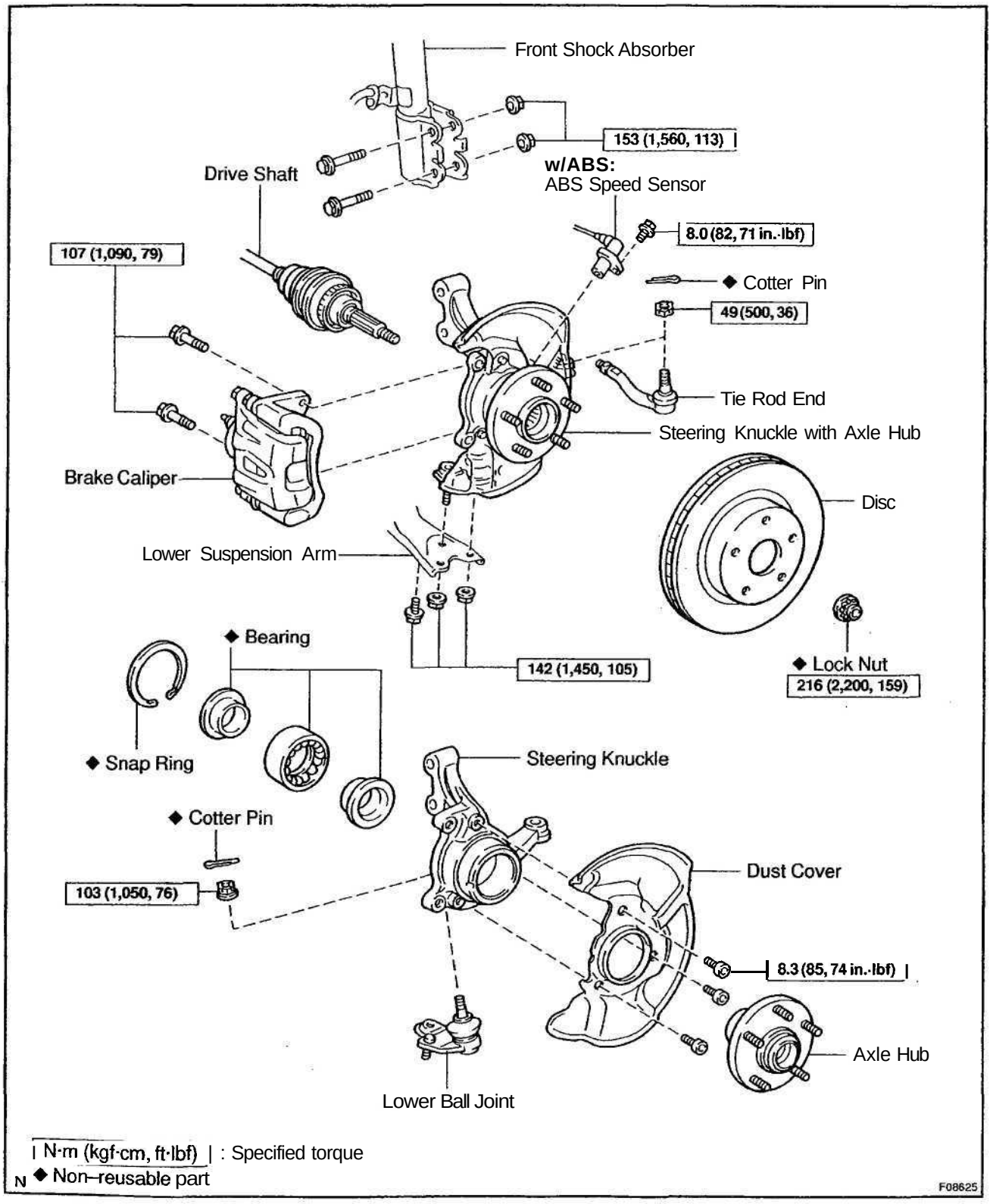

| N·m (kgf·cm, ft·lbf) | : Specified torque
◆ Non–reusable part

F08625

SA1P1-01

REMOVAL

1. REMOVE FRONT WHEEL
Torque: 103 N·m (1,050 kgf·cm, 76 ft·lbf)

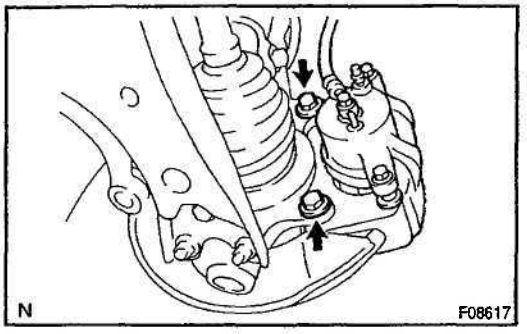

2. CHECK BEARING BACKLASH AND AXLE HUB DEVIATION

(a) Remove the 2 bolts, brake caliper and disc.
(b) Support the brake caliper securely.

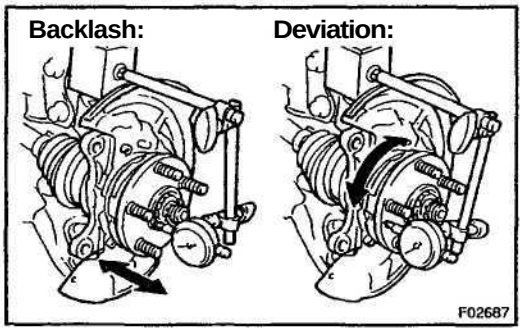

(c) Using a dial indicator, check the backlash near the center of the axle hub.
Maximum: 0.05 mm (0.0020 in.)
If the backlash exceeds the maximum, replace the bearing.
(d) Using a dial indicator, check the deviation at the surface of the axle hub outside the hub bolt.
Maximum: 0.07 mm (0.0028 in.)
If the deviation exceeds the maximum, replace the axle hub.
(e) Install the disc, 2 bolts and brake caliper.
Torque: 107 N·m (1,090 kgf·cm, 79 ft·lbf)

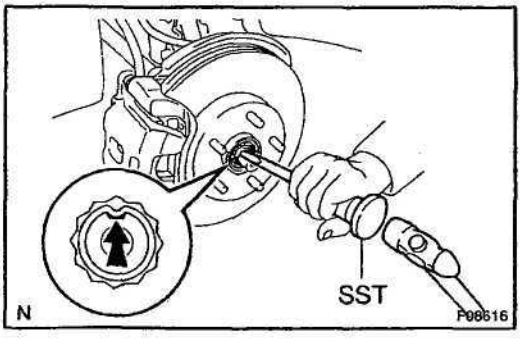

3. REMOVE DRIVE SHAFT LOCK NUT

(a) Using SST and a hammer, unstake the staked part of the lock nut.
SST 09930–00010
(b) While applying the brakes, remove the nut.
Torque: 216 N·m (2,200 kgf·cm, 159 ft·lbf)
(c) Remove the brake caliper and disc.
(d) Support the brake caliper securely.

4. w/ ABS:
REMOVE ABS SPEED SENSOR
Torque: 8.0 N·m (82 kgf·cm, 71 in.·lbf)

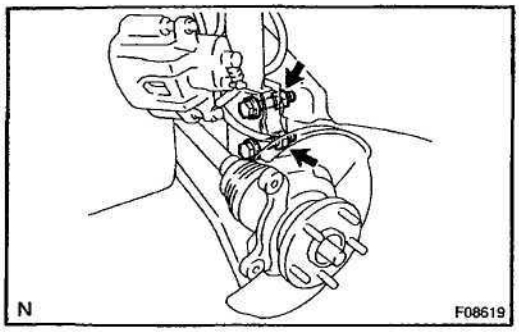

5. LOOSEN 2 NUTS ON LOWER SIDE OF SHOCK ABSORBER

Torque: 153 N·m (1,560 kgf·cm, 113 ft·lbf)

HINT:

Do not remove the 2 bolts and nuts.

6. DISCONNECT TIE ROD END FROM STEERING KNUCKLE

(a) Remove the cotter pin and nut.

Torque: 49 N m (500 kgf·cm, 36 ft-lbf)

HINT:

At the time of installation, if the holes for a new cotter pin are not aligned, tighten the nut further up to 60°.

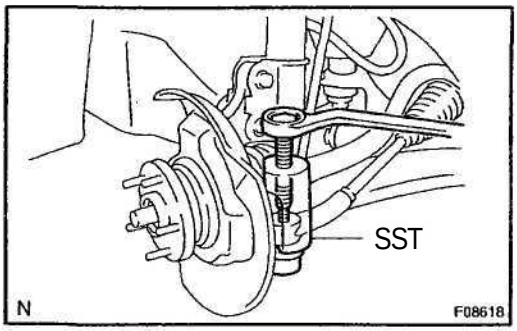

(b) Using SST, disconnect the tie rod end from the steering knuckle.

SST 09610–20012

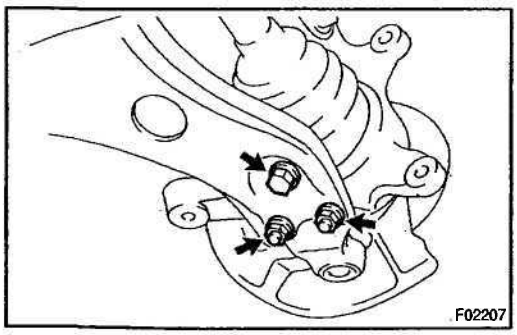

7. DISCONNECT LOWER SUSPENSION ARM FROM LOWER BALL JOINT

Remove the 2 nuts and bolt.

Torque: 142 N·m (1,450 kgf·cm, 105 ft-lbf)

8. REMOVE STEERING KNUCKLE WITH AXLE HUB

(a) Remove the 2 bolts and nuts on the lower side of the shock absorber.

HINT:

At the time of installation, coat the nut's thread with engine oil.

(b) Remove the steering knuckle with the axle hub.

NOTICE:

Be careful not to damage the boot and ABS speed sensor rotor.

SA07D-05

DISASSEMBLY

1. REMOVE LOWER BALL JOINT

(a) Remove the cotter pin and nut.

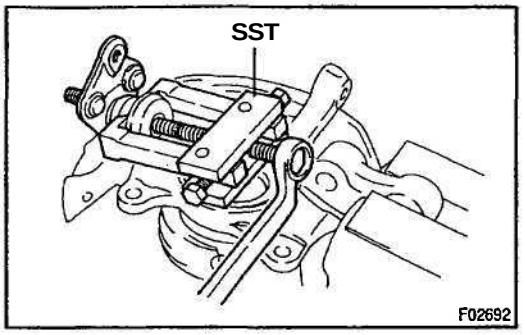

(b) Using SST, remove the lower ball joint.
SST 09628–62011

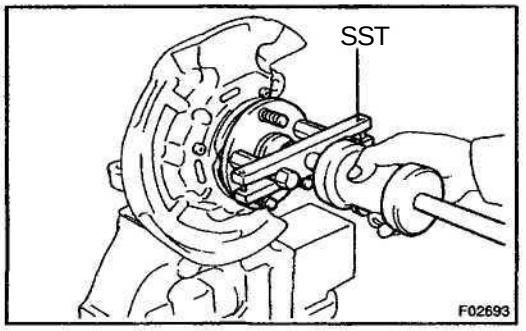

2. REMOVE AXLE HUB

(a) Using SST, remove the axle hub.
SST 09520–00031 (09520-00040, 09521-00010, 09521–00020)

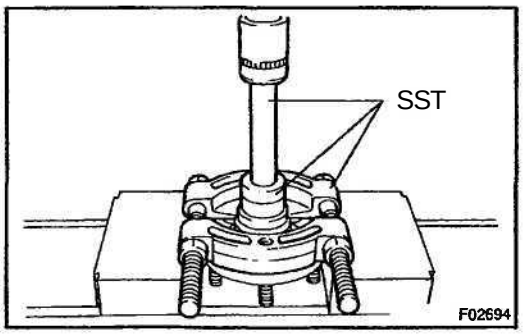

(b) Using SST and a press, remove the inner race (outside) from the axle hub.
SST 09555–55010, 09950–60010 (09951–00380), 09950–70010 (09951–07150)

3. REMOVE DUST COVER

Using a torx socket (T30), remove the 3 bolts and dust cover.

4. REMOVE BEARING FROM STEERING KNUCKLE

(a) Using snap ring pliers, remove the snap ring.

(b) Place the inner race on the outside of the bearing.

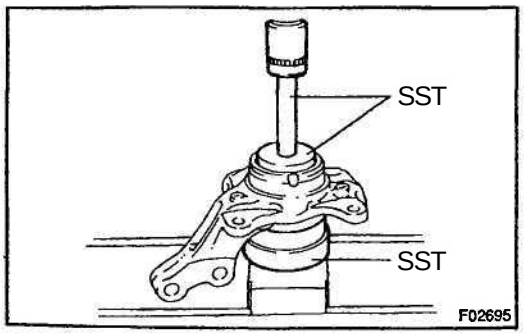

(c) Using SST and a press, remove the bearing.
SST 09527-17011, 09950–60010 (09951-00650), 09950–70010 (09951–07150)

SA108-02

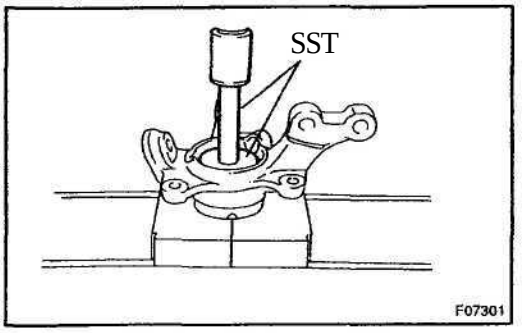

REASSEMBLY

1. INSTALL BEARING

(a) Using SST and a press, install a new bearing to the steering knuckle.

SST 09950–60020 (09951–00730), 09950–70010 (09951–07150)

(b) Using snap ring pliers, install a new snap ring.

2. INSTALL DUST COVER

Place the dust cover and using a torx socket (T30), install the 3 bolts.

Torque: 8.3 N·m (85 kgf·cm, 74 in.·lbf)

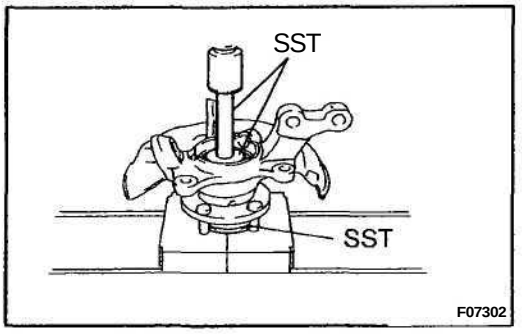

3. INSTALL FRONT AXLE HUB

Using SST and a press, install the axle hub.

SST 09608–32010, 09950–60010 (09951–00550) 09950–70010 (09951–07150)

4. INSTALL LOWER BALL JOINT

(a) Install the lower ball joint and tighten the nut.

Torque: 103 N·m (1,050 kgf·cm, 76 ft·lbf)

(b) Install a new cotter pin.

If the holes for the cotter pin are not aligned, tighten the nut further up to 60°.

INSTALLATION

Installation is in the reverse order of removal (See page SA-12).

HINT:

After installation, check the ABS speed sensor signal (See page DI-276) and front wheel alignment (See page SA-4).

FRONT WHEEL HUB BOLT REPLACEMENT

SA1CN-03

1. REMOVE FRONT WHEEL

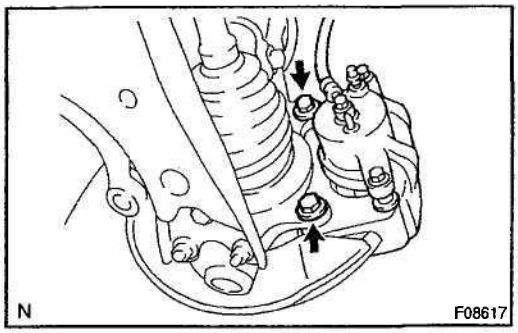

2. REMOVE BRAKE CALIPER AND DISC

(a) Remove the 2 bolts, brake caliper and disc.

(b) Support the brake caliper securely.

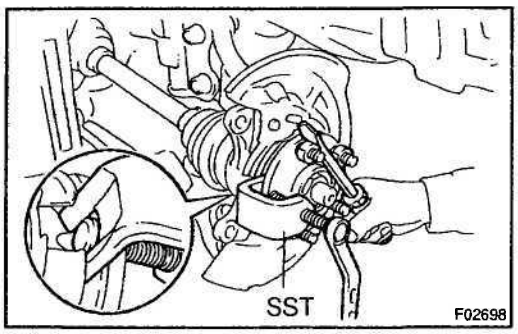

3. REMOVE HUB BOLT

Using SST, 2 nuts and a screwdriver or an equivalent, remove the hub bolt.

SST 09628–10011

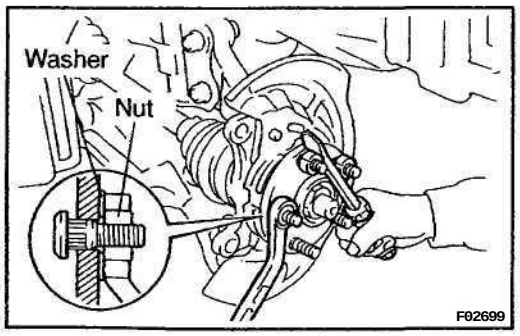

4. INSTALL HUB BOLT

(a) Install a washer and nut to a new hub bolt as shown in the illustration.

(b) Using a screwdriver or an equivalent to hold, install the hub bolt by torquing the nut.

(c) Remove the 3 nuts and washer.

5. INSTALL DISC AND BRAKE CALIPER

Install the disc, brake caliper and 2 bolts.

Torque: 107 N·m (1,090 kgf·cm, 79 ft·lbf)

6. INSTALL FRONT WHEEL

Torque: 103 N·m (1,050 kgf·cm, 76 ft·lbf)

FRONT DRIVE SHAFT

COMPONENTS

SA0TF–02

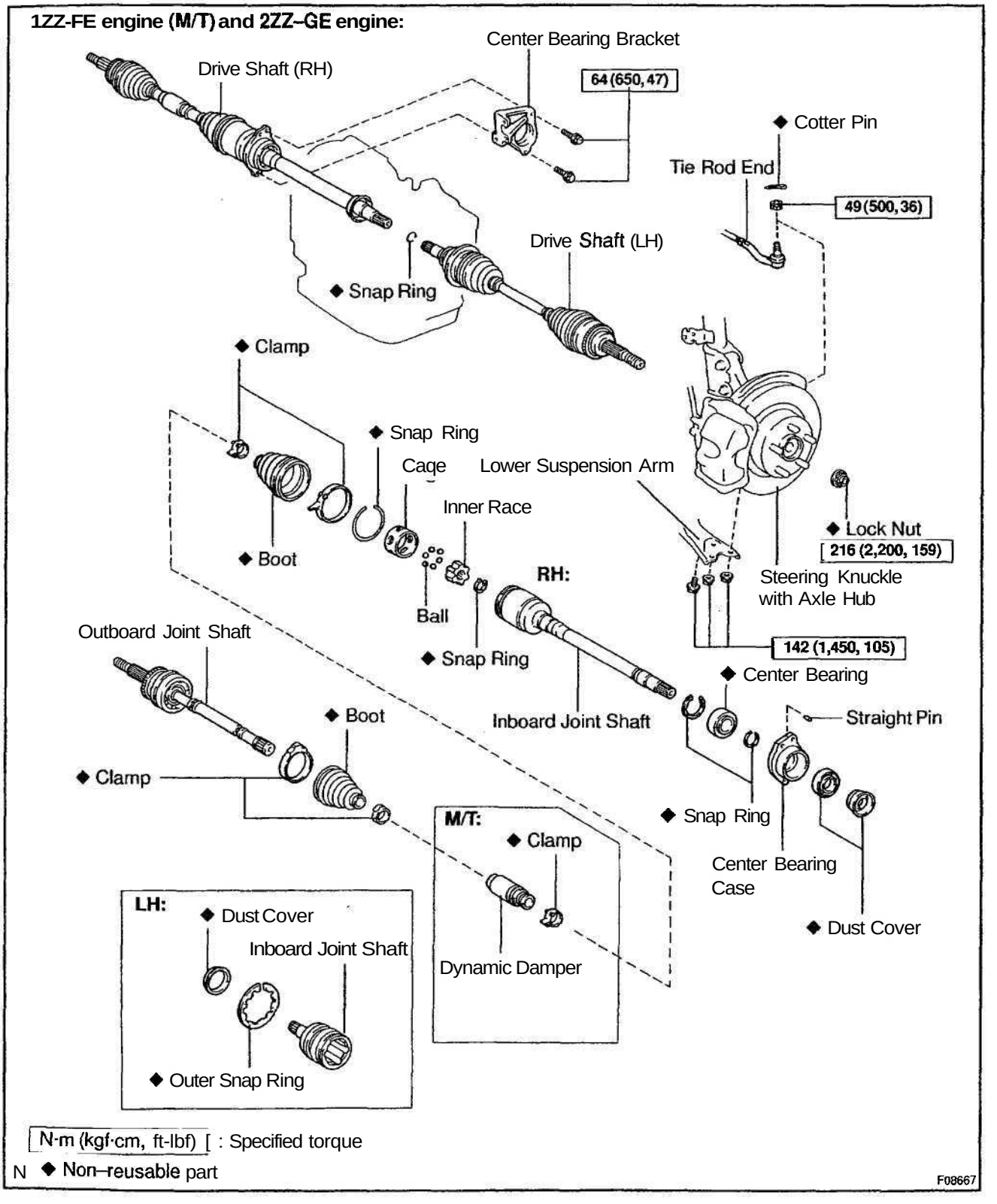

1ZZ–FE engine (A/T):

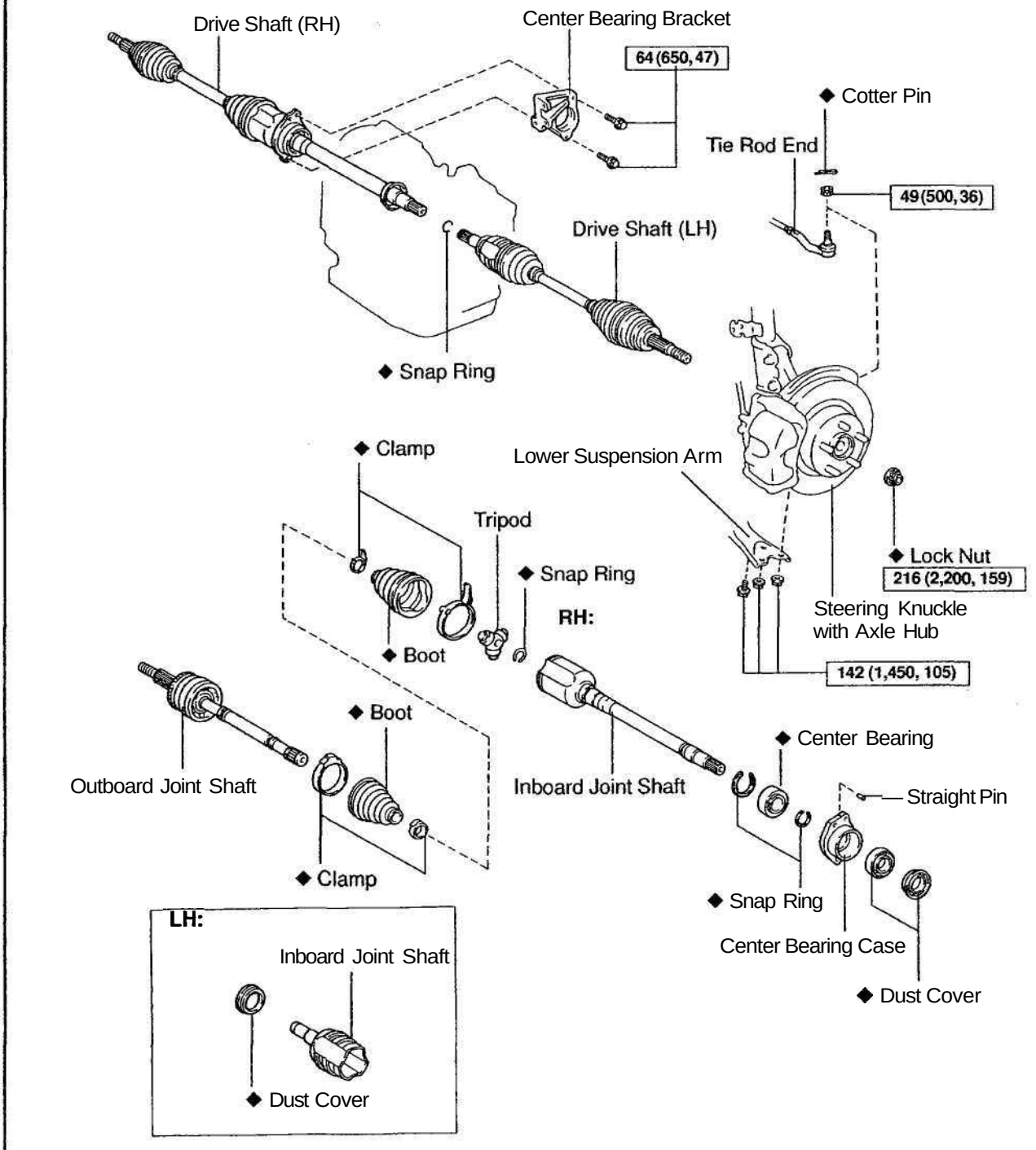

N

N·m (kgf·cm, ft·lbf) : Specified torque

◆ Non–reusable part

F08666

SA1P2-01

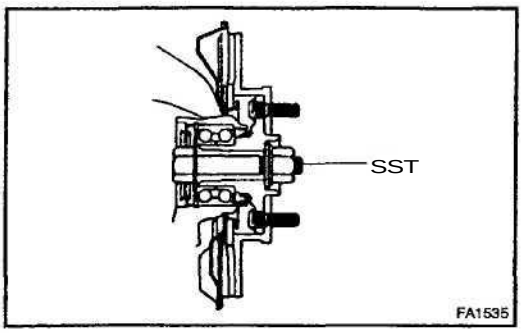

REMOVAL

NOTICE:

- **The hub bearing could be damaged if it is subjected to the vehicle weight, such as when moving the vehicle with the drive shaft removed.**
  Therefore, if it is absolutely necessary to place the vehicle weight on the hub bearing, first support it with the SST.
  SST 09608–16042 (09608–02021, 09608–02041)
- w/ ABS:
  After disconnecting the drive shaft from the axle hub, work carefully so as not to damage the ABS speed sensor rotor serrations on the drive shaft.

1. REMOVE FRONT WHEEL
Torque: 103 N·m (1,050 kgf·cm, 76 ft·lbf)

2. REMOVE ENGINE UNDER COVER

3. DRAIN GEAR OIL (M/T) OR ATF (A/T)

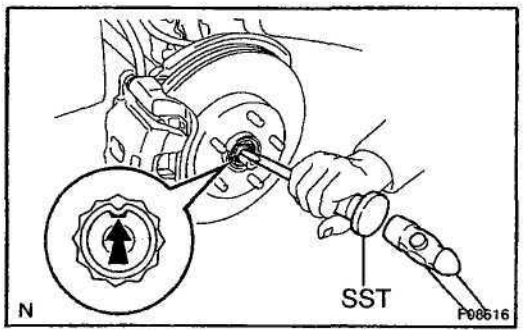

4. REMOVE DRIVE SHAFT LOCK NUT

(a) Using SST and a hammer, unstake the staked part of the lock nut.
SST 09930–00010

(b) While applying the brakes, remove the nut.
Torque: 216 N·m (2,200 kgf-cm, 159 ft-lbf)

5. DISCONNECT TIE ROD END FROM STEERING KNUCKLE

(a) Remove the cotter pin and nut.
Torque: 49 N·m (500 kgf·cm, 36 ft·lbf)

HINT:
At the time of installation, if the holes for a new cotter pin are not aligned, tighten the nut further up to 60°.

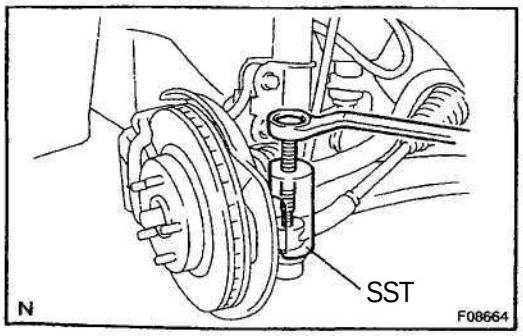

(b) Using SST, disconnect the tie rod end from the steering knuckle.
SST 09610–20012

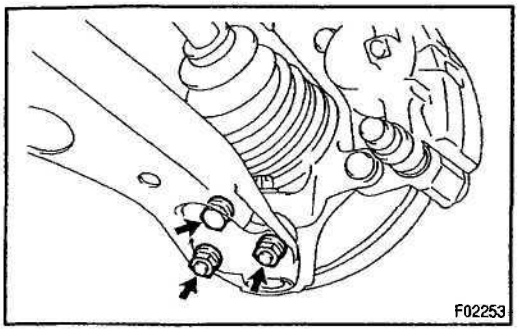

6. DISCONNECT LOWER BALL JOINT FROM LOWER SUSPENSION ARM

Remove the 2 nuts and bolt.

Torque: 142 N·m (1,450 kgf·cm, 105 ft·lbf)

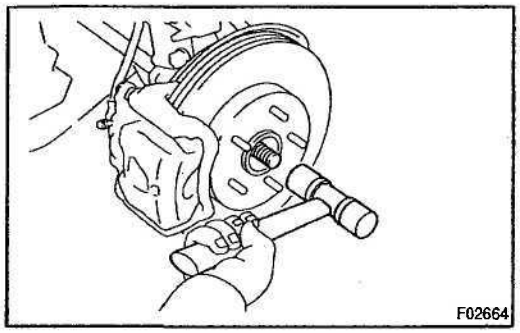

7. DISCONNECT DRIVE SHAFT FROM AXLE HUB

Using a plastic hammer, disconnect the drive shaft from the axle hub.

NOTICE:

Be careful not to damage the boot and ABS speed sensor rotor.

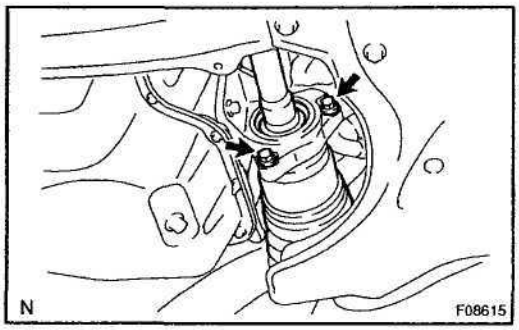

8. RH drive shaft:
REMOVE DRIVE SHAFT

Remove the 2 bolts on the center bearing bracket and pull out the drive shaft together with the center bearing case.

Torque: 64 N·m (650 kgf·cm, 47 ft·lbf)

NOTICE:

Be careful not to damage the oil seal and dust cover.

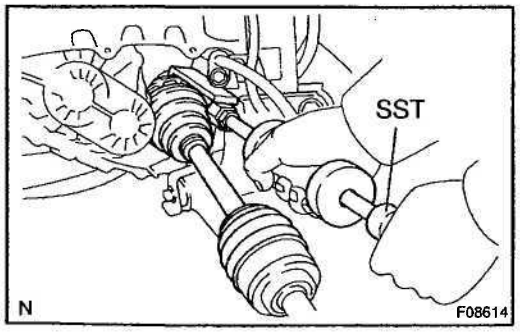

9. LH drive shaft:
REMOVE DRIVE SHAFT

(a) Using SST, remove the drive shaft.

SST 09520–01010, 09520–24010 (09520–32040)

NOTICE:

Be careful not to damage the oil seal and dust cover.

HINT:

At the time of installation, please refer to the following items.

- Apply gear oil to the inboard joint shaft and differential case sliding surfaces.
- Before installing the drive shaft, set the snap ring with its opening side facing downward.
- Whether inboard joint shaft is in contact with pinion shaft or not can be known from the sound or feeling.
- After installation, check that there is 2 - 3 mm (0.08 - 0.12 in.) of play in the axial direction.
- After installation, check that the drive shaft cannot be removed by hand.

(b) Using a screwdriver, remove the snap ring from the inboard joint shaft.

SA1P3-01

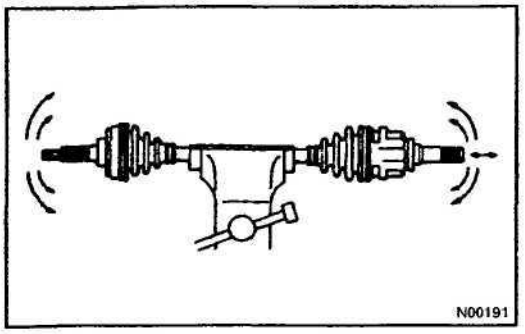

DISASSEMBLY

1. 1ZZ-FE engine (M/T) and 2ZZ–GE engine:
DISASSEMBLE DRIVE SHAFT

(a) Check the drive shaft.
(1) Check to see that there is no remarkable play in the outboard joint.
(2) Check to see that the inboard joint slides smoothly in the thrust direction.
(3) Check to see that there is no remarkable play in the radial direction of the inboard joint.
(4) Check the boots for damage.

(b) Remove the inboard and outboard joint boot clamps.
(1) Using a screwdriver, disclamp the 2 inboard joint boot clamps.
(2) Using a side cutter, cut the 2 outboard joint boot clamps and remove them.

(c) M/T:
Remove the dynamic damper clamp.
Using a screwdriver, disclamp the dynamic damper clamp.

(d) Remove the inboard joint shaft.
(1) Slide the inboard joint boot toward the outboard joint.

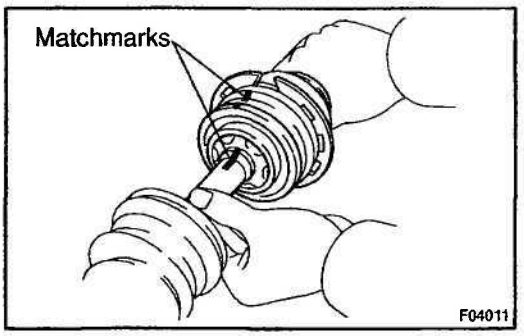

(2) Place matchmarks on the outboard joint shaft and inboard joint shaft.

NOTICE:
Do not punch the marks.

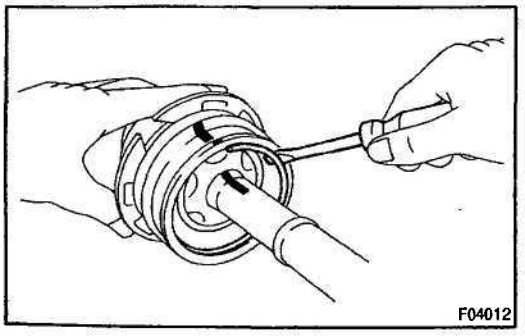

(3) Using a screwdriver, remove the snap ring.
(4) Remove the inboard joint shaft from the outboard joint shaft.

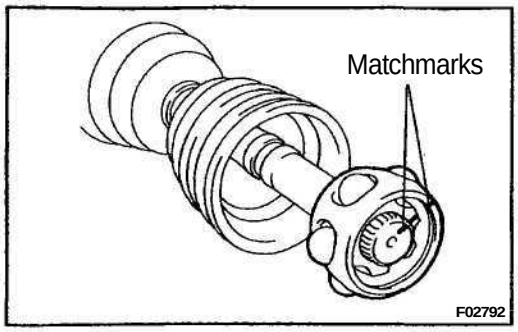

(e) Disassemble the outboard joint shaft.
(1) Place matchmarks on the outboard joint shaft, inner race and cage.

NOTICE:
Do not punch the marks.

(2) Remove the 6 balls.
(3) Slide the cage toward outboard joint.

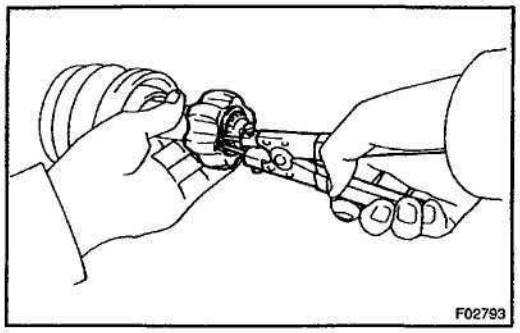

(4) Using a snap ring expander, remove the snap ring.

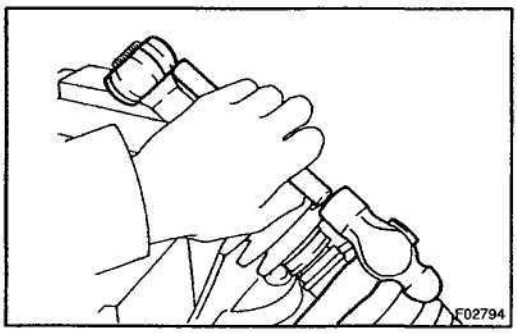

(5) Using a brass bar and hammer, remove the inner race.

NOTICE:
Be careful not to damage the inner race.

(6) Remove the cage.

(f) Remove the dynamic damper (M/T), damper clamp (M/T), inboard and outboard joint boots and inboard joint clamps.

NOTICE:
Do not disassemble the outboard joint.

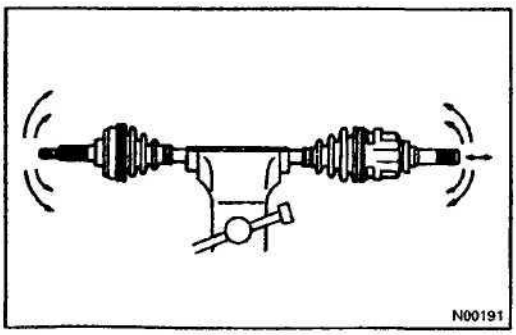

2. 1ZZ-FE engine (A/T):
DISASSEMBLE DRIVE SHAFT

(a) Check the drive shaft.
(1) Check to see that there is no remarkable play in the outboard joint.
(2) Check to see that the inboard joint slides smoothly in the thrust direction.
(3) Check to see that there is no remarkable play in the radial direction of the inboard joint.
(4) Check the boots for damage.

(b) Remove the inboard and outboard joint boot clamps.
(1) Using a screwdriver, disclamp the 2 inboard joint boot clamps.
(2) Using a side cutter, cut the 2 outboard joint boot clamps and remove them.

(c) Remove the inboard joint shaft.
(1) Slide the inboard joint boot toward the outboard joint.

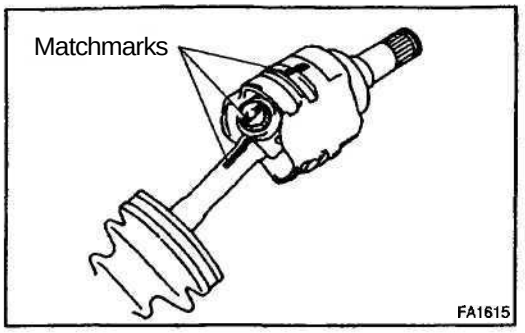

(2) Place matchmarks on the inboard joint shaft, tripod and outboard joint shaft.

NOTICE:
Do not punch the marks.

(3) Remove the inboard joint shaft from the outboard joint shaft.

(d) Remove the tripod.

(1) Using a snap ring expander, remove the snap ring.

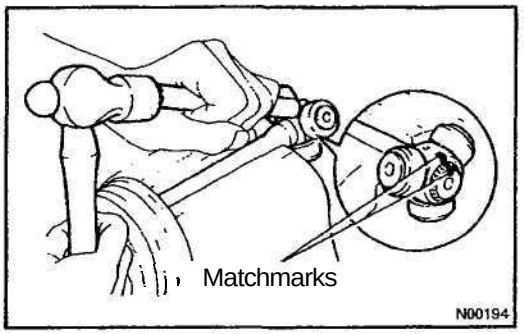

(2) Place matchmarks on the outboard joint shaft and tripod.

NOTICE:
Do not punch the marks.

(3) Using a brass bar and hammer, remove the tripod from the outboard joint shaft.

NOTICE:
Do not tap the roller.

(e) Remove the inboard and outboard joint boots and inboard joint clamps.

NOTICE:
Do not disassemble the out board joint.

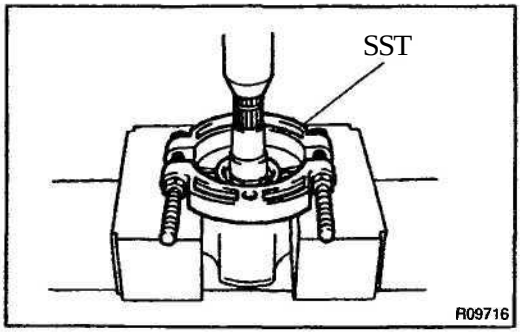

3. DISASSEMBLE INBOARD JOINT SHAFT

(a) LH:
Remove the dust cover.
Using SST and a press, remove the dust cover.
SST 09950–00020

(b) LH shaft of 1ZZ–FE engine (M/T) and 2ZZ–GE engine:
Using a snap ring expander, remove the outer snap ring.

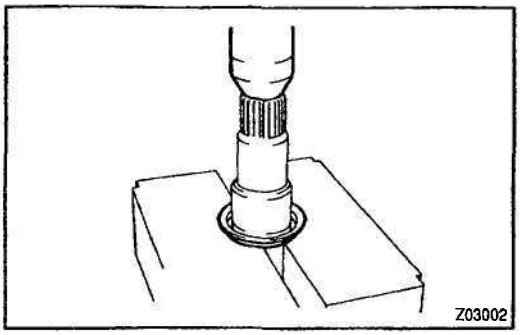

(c) RH:
Remove the transaxle side dust cover.
Using a press, remove the transaxle side dust cover.

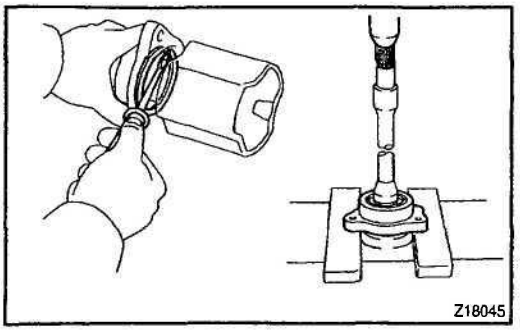

(d) RH:
Remove the center bearing.
(1) Using a screwdriver, remove the outside snap ring.
(2) Using a press, remove the center bearing case.
(3) Using a pin punch and hammer, remove the straight pin from the center bearing case.

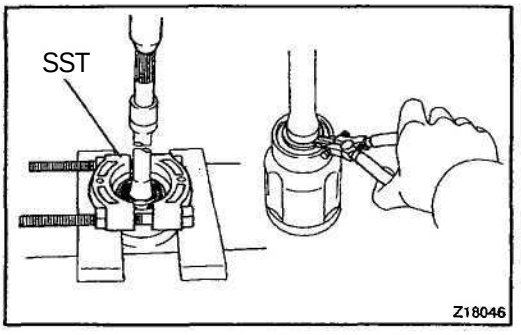

(4) Using SST and a press, remove the dust cover.
SST 09950–00020
(5) Using a snap ring expander, remove the inside snap ring.

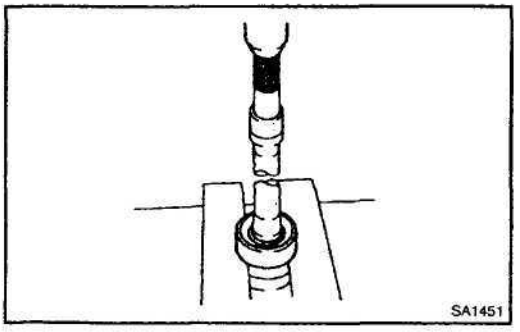

(6) Using a press, remove the center bearing.

SA1P4-01

REASSEMBLY

1. REASSEMBLE INBOARD JOINT SHAFT

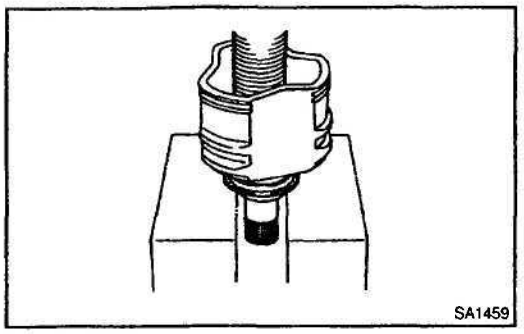

(a) LH:
Install dust cover.
Using a press, install a new dust cover.

(b) LH shaft of 1ZZ–FE engine (M/T) and 2ZZ–GE engine:
Using a snap ring expander, install a new outer snap ring.

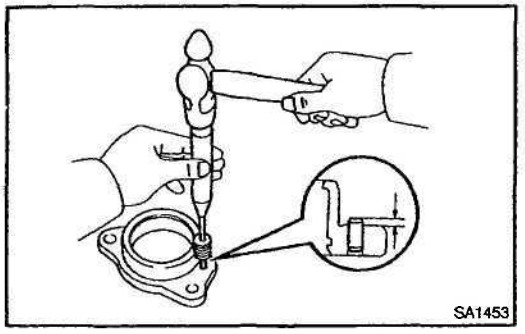

(c) RH:
Install center bearing.

(1) Using a pin punch and hammer, install the straight pin into the center bearing case.

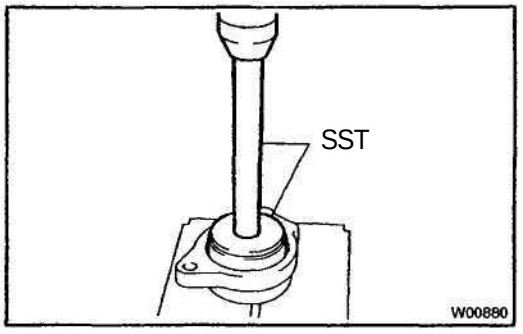

(2) Using SST and a press, install a new center bearing into the bearing case.
SST 09950–60010 (09951–00650), 09950–70010 (09951–07150)

(3) Using a screwdriver, install a new outside snap ring.

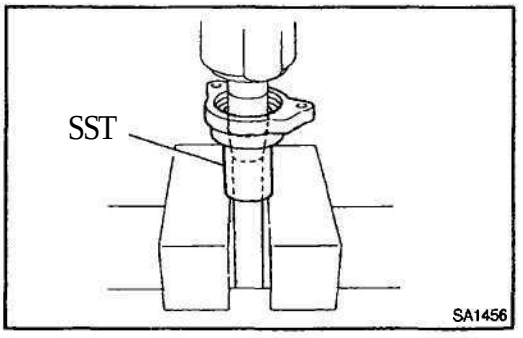

(4) Using SST and a press, install the center bearing with the bearing case assembly to the inboard joint shaft.
SST 09710–30021 (09710–03141)

(5) Using a snap ring expander, install a new inside snap ring.

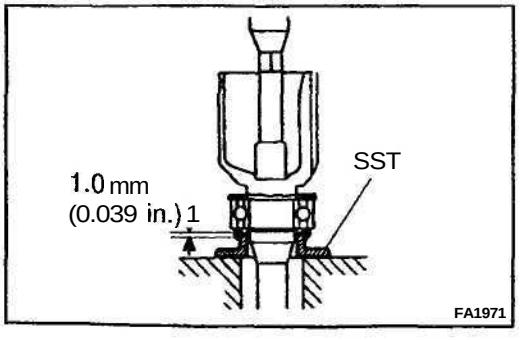

(6) Using SST, an extension bar and press, install a new dust cover.
SST 09506–35010

HINT:
The clearance between the dust cover and bearing should be kept in the ranges as shown in the illustration.

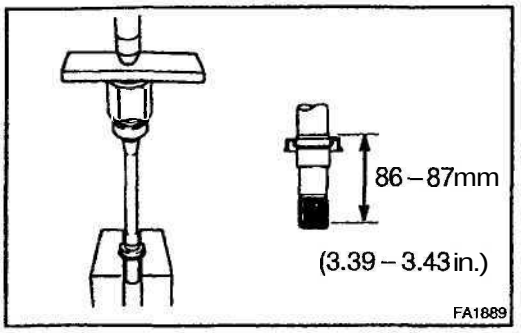

(d) RH:
Install the transaxle side dust cover.
Using a steel plate and press, install a new transaxle side dust cover until the distance from the tip of the inboard joint shaft to the dust cover reaches the specified value, as shown in the illustration.

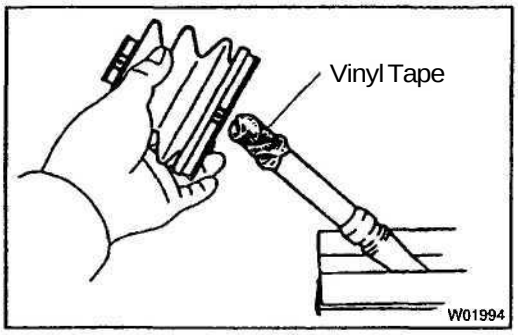

2. 1ZZ–FE engine (A/T):
REASSEMBLE DRIVE SHAFT

(a) Temporarily install new outboard and inboard joint boots and new clamps.

HINT:
Before installing the boots, wrap the spline of the outboard joint shaft with vinyl tape to prevent them from being damaged.

(1) Place 2 new clamps on a new outboard joint boot and install them to the outboard joint shaft.
(2) Place 2 new clamps on a new inboard joint boot and install them to the outboard joint shaft.

(b) Install the tripod.
(1) Place the beveled side of the tripod axial spline toward the outboard joint.
(2) Align the matchmarks placed before removal.
(3) Using a brass bar and hammer, tap in the tripod to the outboard joint shaft.

NOTICE:
Do not tap the roller.

(4) Using a snap ring expander, install a new snap ring.

(c) Install the boot to outboard joint.
Before assembling the boot, pack the outboard joint and boot with grease in the boot kit.
Grease capacity: (Color = Yellow ocher)
110 – 120 g (3.9 – 4.2 oz.)

(d) Install the inboard joint shaft to outboard joint shaft.
(1) Pack the inboard joint and boot with grease in the boot kit.
Grease capacity: (Color = Yellow ocher)
180 – 190 g (6.3 –6.7 oz.)
(2) Align the matchmarks placed before removal, and install the inboard joint shaft to the outboard joint shaft.
(3) Temporarily install the boot to the inboard joint.

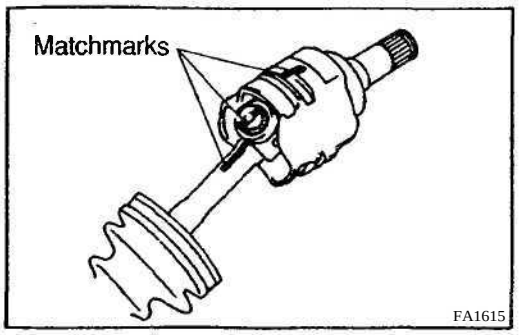

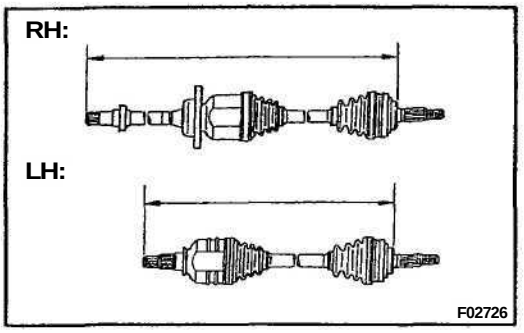

(e) Assemble the boot clamps to both boots.
(1) Make sure that the boots are on the shaft grooves.
(2) Make sure that the boots are not stretched or contracted when the drive shaft is at standard length.

Drive shaft standard length:

RH	851.0 ± 5.0 mm (33.504 ± 0.197 in.)
LH	565.9 ± 5.0 mm (22.279 ± 0.197 in.)

(3) Bend the band and lock the inboard joint boot clamps with a screwdriver.

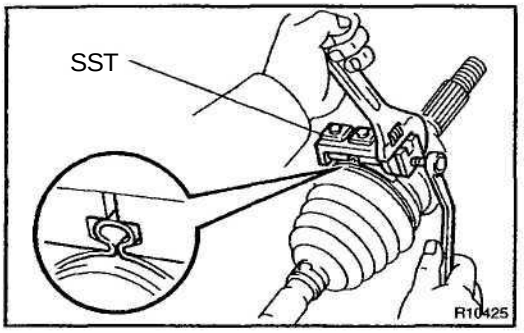

(4) Secure the 2 outboard joint boot clamps onto the boot.
(5) Place SST onto the outboard joint large boot clamp.
SST 09521-24010
(6) Tighten the SST so that the large clamp is pinched.

NOTICE:
Do not overtighten the SST.

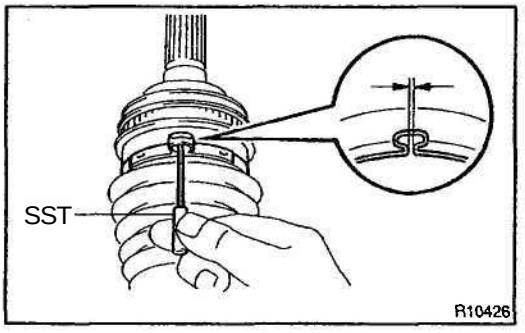

(7) Using SST, adjust the clearance of the large clamp.
SST 09240–00020
Clearance: 0.8 mm (0.031 in.) or less
(8) Employ the same manner to the outboard joint small boot clamp.

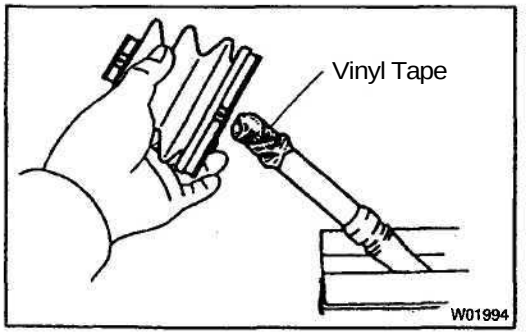

3. 1ZZ–FE engine (M/T) and 2ZZ–GE engine:
REASSEMBLE DRIVE SHAFT

(a) Temporarily install dynamic damper (M/T), new outboard and inboard joint boots and new clamps.

HINT:
Before installing the boots, wrap the spline of the outboard joint shaft with vinyl tape to prevent them from being damaged.

(1) Place 2 new clamps on a new outboard joint boot and install them to the outboard joint shaft.
(2) M/T:
Place new clamp on the dynamic damper and install them to the outboard joint shaft.
(3) Place 2 new clamps on a new inboard joint boot and install them to the outboard joint shaft.

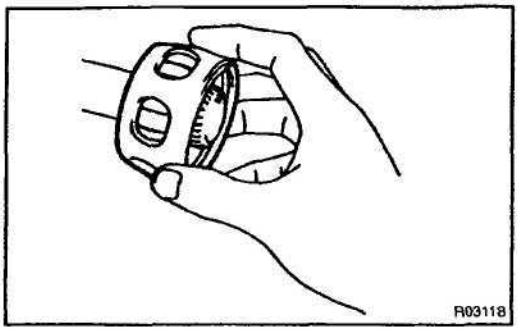

(b) Assemble the outboard joint shaft.
(1) Install the cage to the outboard joint shaft.

NOTICE:
The side with smaller diameter must face outboard joint.

(2) Align the matchmarks on the inner race and outboard joint shaft.

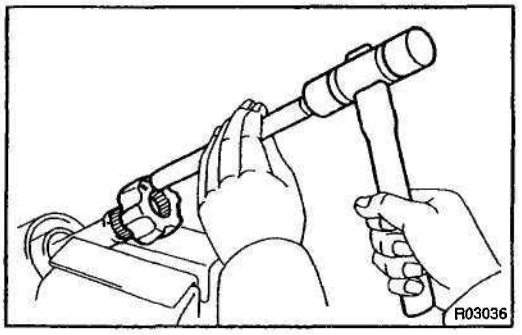

(3) Using a brass bar and hammer, tap in the inner race to the outboard joint shaft.

NOTICE:
Be careful not to damage the inner race.

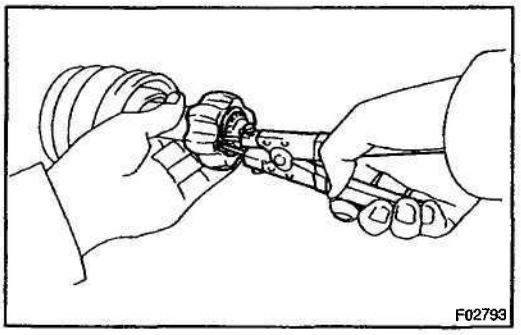

(4) Using a snap ring expander, install a new snap ring.

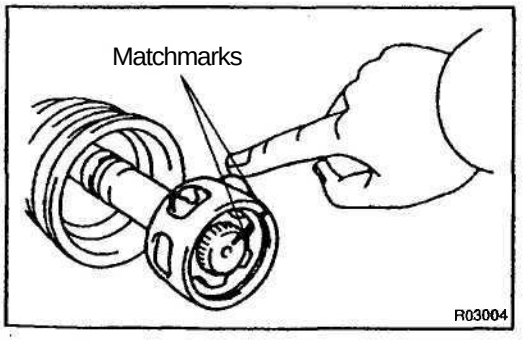

(5) Align the matchmarks on the cage and inner race.
(6) Install the cage to the inner race.
(7) Install the 6 balls.

HINT:
Apply grease onto the balls to keep them from falling.

(c) Install the boot to outboard joint.
Before assembling the boot, pack the outboard joint and boot with grease in the boot kit.
Grease capacity: (Color = Black)
115 – 135 g (4.1 – 4.8 oz.)

(d) Install the inboard joint shaft to outboard joint shaft.
(1) Before assembling the boot, pack the inboard joint and boot with grease in the boot kit.
Grease capacity: (Color = Gray)
100 – 120 g (3.5 – 4.2 oz.)

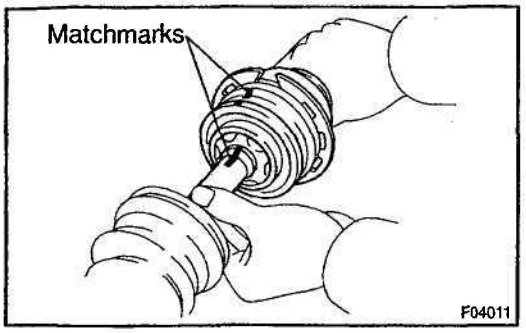

(2) Align the matchmarks on the inboard joint shaft and outboard joint shaft.
(3) Install the inboard joint shaft to the outboard joint shaft.

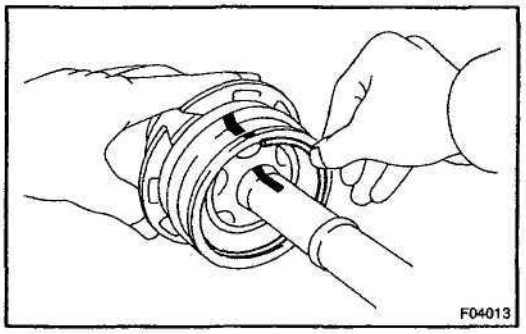

(4) Install a new snap ring.
(5) Temporarily install the boot to the inboard joint shaft.

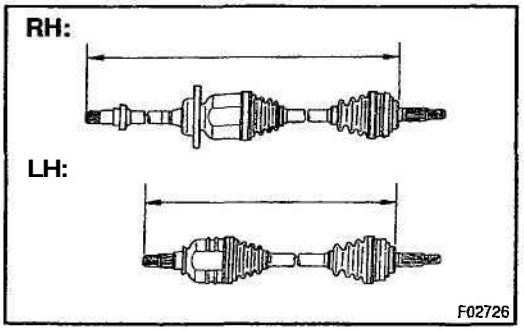

(e) Assemble the boot clamps to both boots.
(1) Make sure that the boots are on the shaft grooves.
(2) Make sure that the boots are not stretched or contracted when the drive shaft is at standard length.

Drive shaft standard length:

RH	845.5 ± 5.0 mm (33.287 ± 0.197 in.)
LH	563.7 ± 5.0 mm (22.193 ± 0.197 in.)

(3) Bend the band and lock the inboard joint boot clamps with a screwdriver.

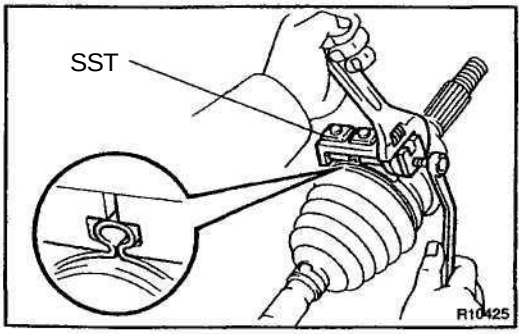

(4) Secure the 2 outboard joint boot clamps onto the boot.
(5) Place SST onto the outboard joint large boot clamp.
SST 09521-24010
(6) Tighten the SST so that the large clamp is pinched.

NOTICE:
Do not overtighten the SST.

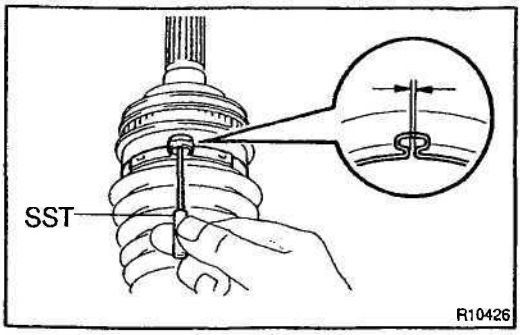

(7) Using SST, adjust the clearance of the large clamp.
SST 09240–00020
Clearance: 1.2 - 4.0 mm (0.047 - 0.157 in.)
(8) Employ the same manner to the outboard joint small boot clamp.

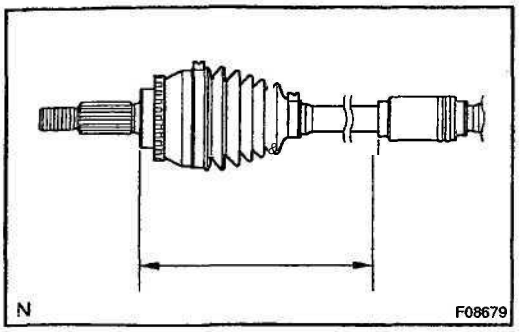

(f) M/T:

Assemble the dynamic damper clamp.

(1) Set the dynamic damper distance, as described below.

Distance: 155.0 ± 2.0 mm (6.102 ± 0.079 in.)

(2) Bend the band and lock the dynamic damper clamp with a screwdriver.

4. **CHECK DRIVE SHAFT (See page SA–22)**

SA0TJ-02

INSTALLATION

Installation is in the reverse order removal (See page SA–20).

HINT:

After installation, check the ABS speed sensor signal (See page DI–276) and front wheel alignment (See page SA–4).

FRONT SHOCK ABSORBER

COMPONENTS

SA16J-03

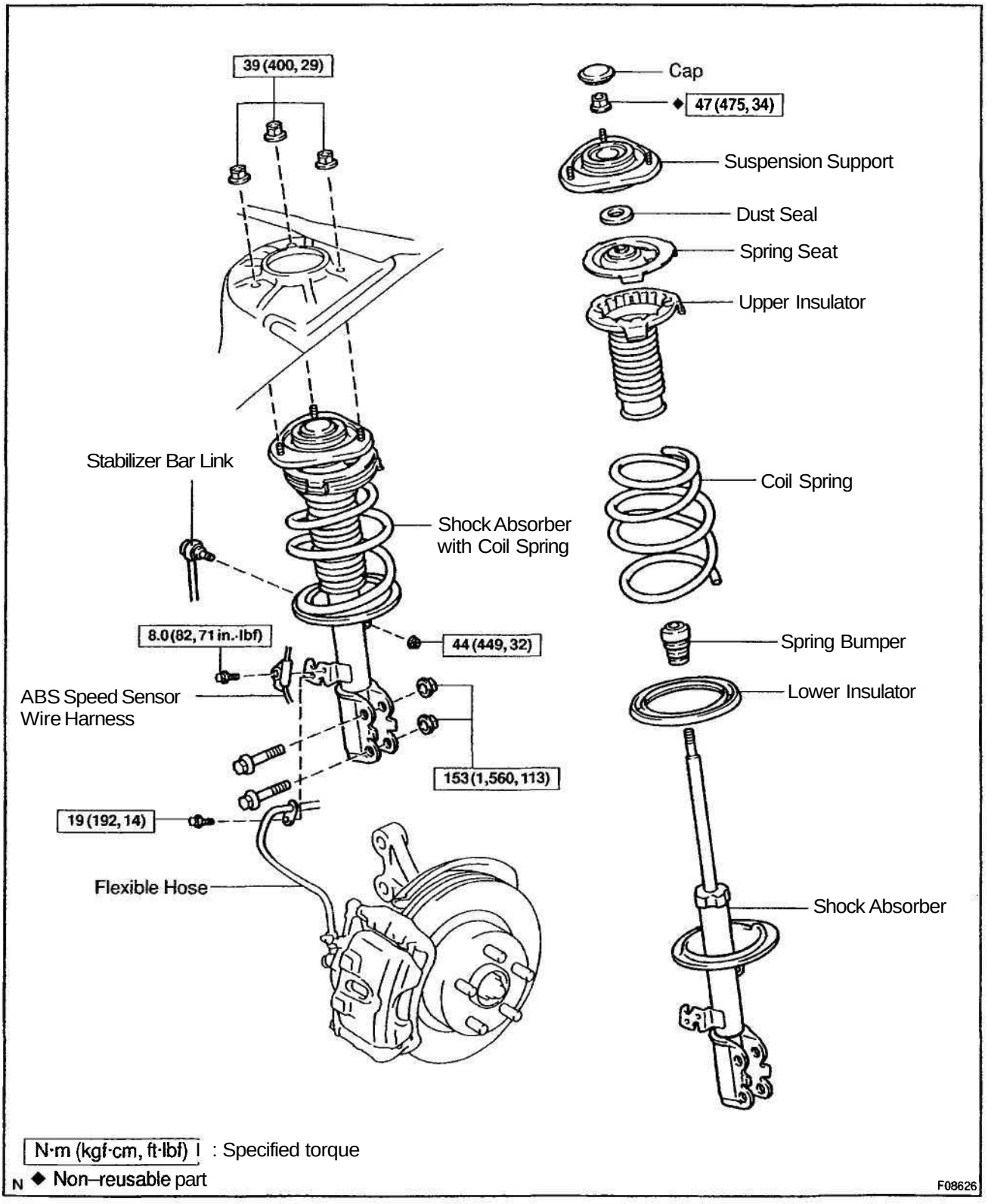

SA1PS-01

REMOVAL

1. REMOVE FRONT WHEEL

Torque: 103 N·m (1,050 kgf·cm, 76 ft·lbf)

2. DISCONNECT ABS SPEED SENSOR WIRE HARNESS CLAMPS FROM SHOCK ABSORBER

Remove the bolt and disconnect the ABS speed sensor wire harness clamp.

Torque: 8.0 N·m (82 kgf·cm, 71 in.·lbf)

3. DISCONNECT FLEXIBLE HOSE

Remove the bolt and disconnect the flexible hose from the shock absorber bracket.

Torque: 19 N·m (192 kgf cm, 14 tt-lbf)

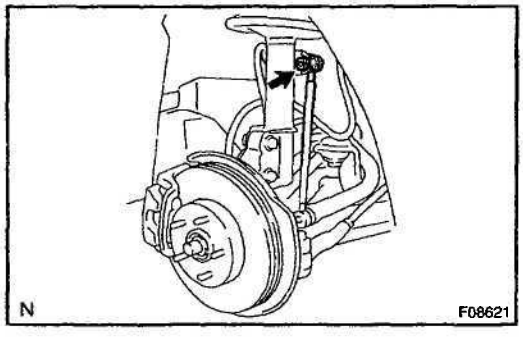

4. DISCONNECT STABILIZER BAR LINK

Remove the nut and disconnect the stabilizer bar link from the shock absorber.

Torque: 44 N·m (449 kgf·cm, 32 ft-lbf)

HINT:

If the ball joint turns together with the nut, use a hexagon (5 mm) wrench to hold the stud.

5. REMOVE SHOCK ABSORBER WITH COIL SPRING

(a) Loosen the 2 nuts on the lower side of shock absorber.

Torque: 153 N·m (1,560 kgf·cm, 113 ft-lbf)

HINT:

Do not remove the 2 bolts.

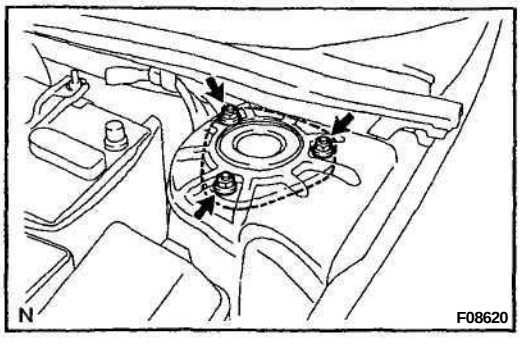

(b) Remove the 3 nuts on the upper side of the shock absorber.

Torque: 39 N m (400 kgf·cm, 29 ft-lbf)

(c) Remove the 2 nuts and bolts on the lower side of shock absorber.

HINT:

At the time of installation, coat the nut's thread with engine oil.

(d) Remove the shock absorber with coil spring.

5A0CS-05

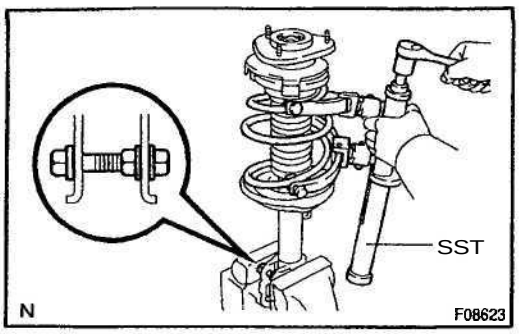

DISASSEMBLY

REMOVE COIL SPRING

(a) Install 2 nuts and a bolt to the bracket at the lower side of the shock absorber and secure it in a vise.

(b) Using SST, compress the coil spring.
SST 09727-30021 (09727–00010, 09727–00021, 09727–00031)

NOTICE:
Do not use an impact wrench. It will damage the SST.

(c) Remove the cap from the suspension support.

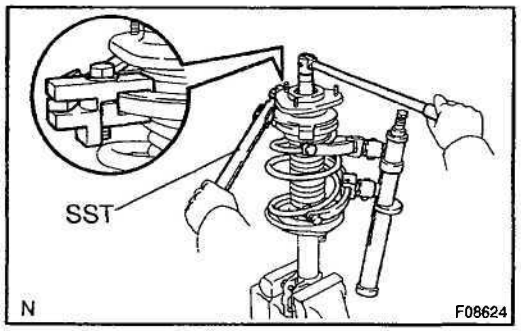

(d) Using SST to hold the spring seat, remove the nut.
SST 09729–22031

(e) Remove the suspension support, dust seal, spring seat, upper insulator, coil spring, spring bumper and lower insulator.

SA0CT–05

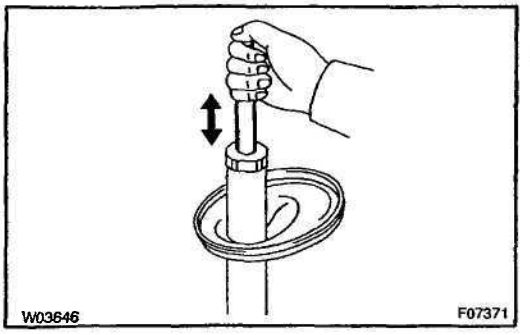

INSPECTION

INSPECT SHOCK ABSORBER

Compress and extend the shock absorber rod and check that there is no abnormal resistance or unusual sound during operation.

If there is any abnormality, replace the shock absorber with a new one.

NOTICE:

When disposing of the shock absorber, see DISPOSAL on page SA–37.

DISPOSAL

1. FULLY EXTEND SHOCK ABSORBER ROD

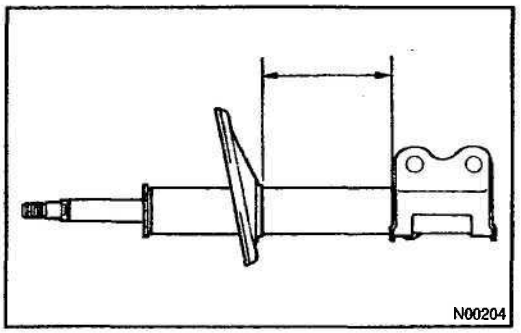

2. DRILL HOLE TO DISCHARGE GAS FROM CYLINDER

Using a drill, make a hole in the cylinder as shown in the illustration to discharge the gas inside.

CAUTION:

- **When drilling, chips may fly out, work carefully.**
- **The gas is colorless, odorless and non–poisonous.**

SA1P6-01

REASSEMBLY

1. **INSTALL LOWER INSULATOR ONTO SHOCK ABSORBER**
2. **INSTALL SPRING BUMPER TO PISTON ROD**

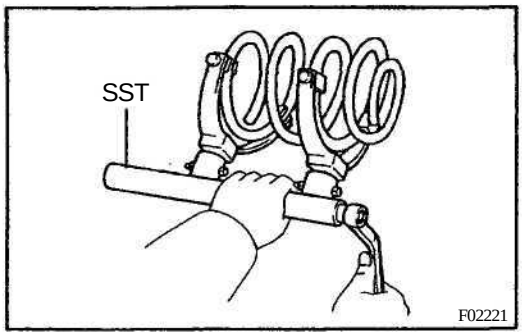

3. **INSTALL COIL SPRING**

(a) Using SST, compress the coil spring.

SST 09727–30021 (09727–00010, 09727–00021, 09727–00031)

NOTICE:

Do not use an impact wrench. It will damage the SST.

(b) Install the coil spring to the shock absorber.

HINT:

Fit the lower end of the coil spring into the gap of the spring lower seat.

(c) Install the upper insulator as shown in the illustration.

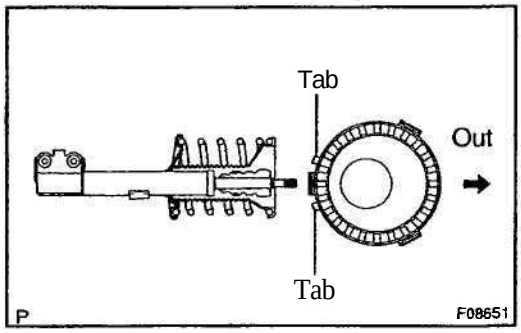

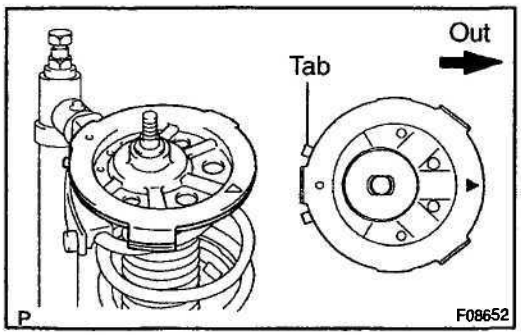

(d) Install the spring seat to the shock absorber with the "Δ" mark facing to the outside of the vehicle.

(e) Install the dust seal and suspension support.

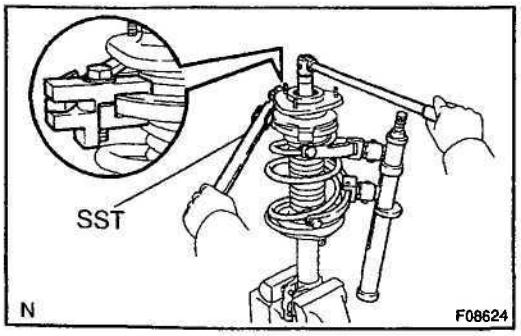

(f) Using SST to hold the suspension support, install a new nut.

SST 09729–22031

Torque: 47 N·m (475 kgf·cm, 34 ft·lbf)

(g) Remove the SST.

SST 09727-30021 (09727–00010, 09727–00021, 09727–00031)

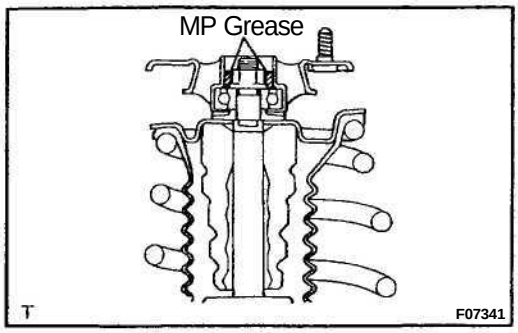

(h) Apply MP grease into the suspension support.
(i) Install the cap.

INSTALLATION

Installation is in the reverse order of removal (See page SA–34).

HINT:

After installation, check the front wheel alignment (See page SA–4).

FRONT LOWER SUSPENSION ARM

SA1OR-02

COMPONENTS

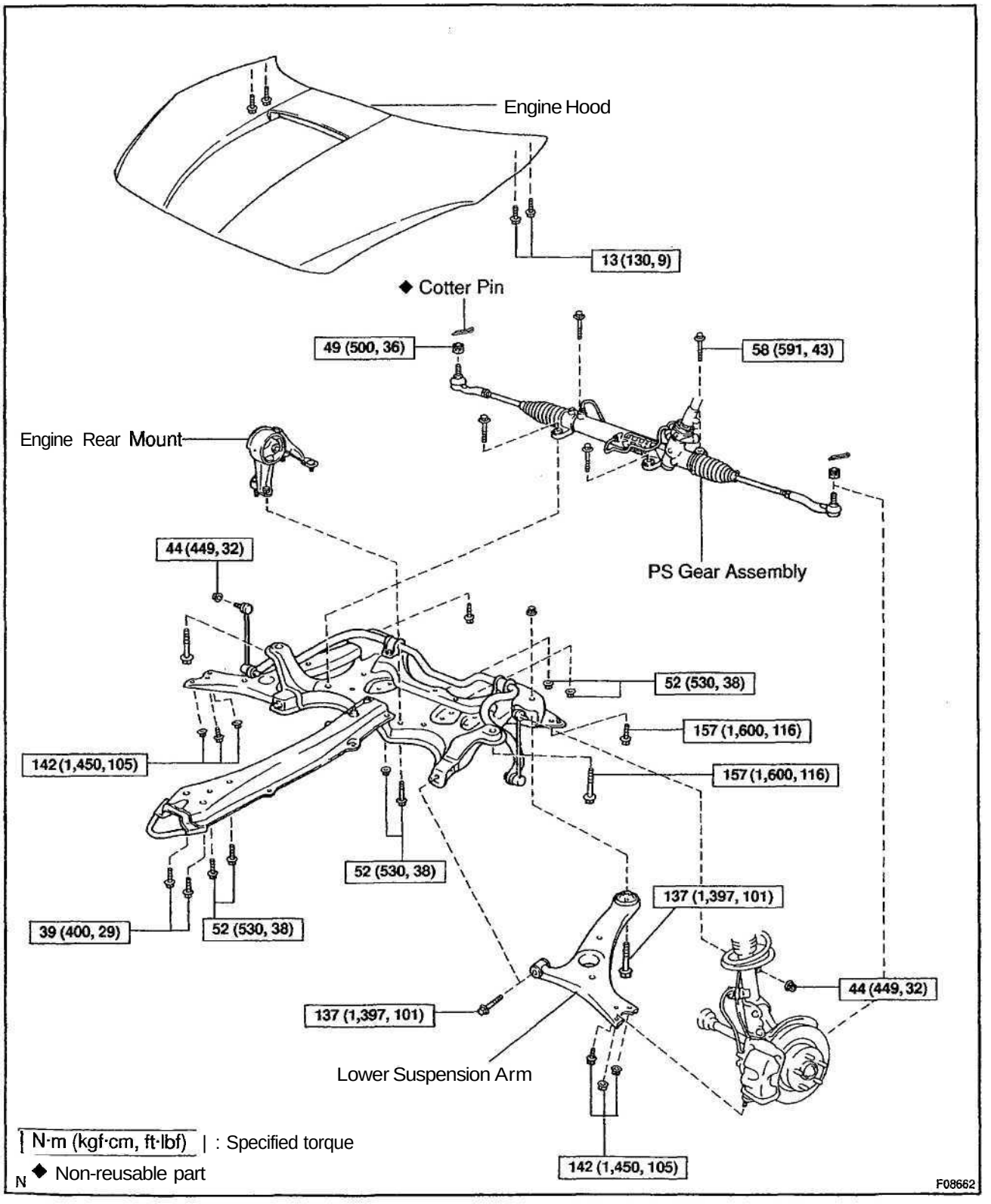

SA1OS-01

REMOVAL

1. REMOVE FRONT WHEEL
Torque: 103 N·m (1,050 kgf·cm, 76 ft·lbf)

2. M/T or A/T RH side:
REMOVE LOWER SUSPENSION ARM

(a) Remove the engine under cover.

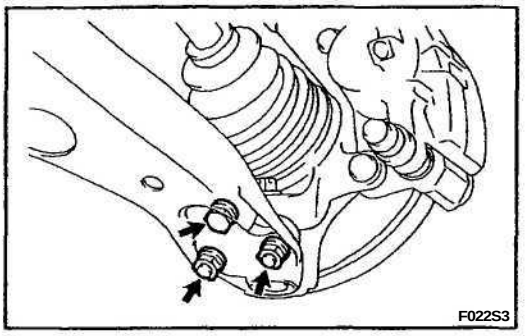

(b) Remove the bolt and 2 nuts, and disconnect the lower suspension arm from the lower ball joint.
Torque: 142 N·m (1,450 kgf·cm, 105 ft·lbf)

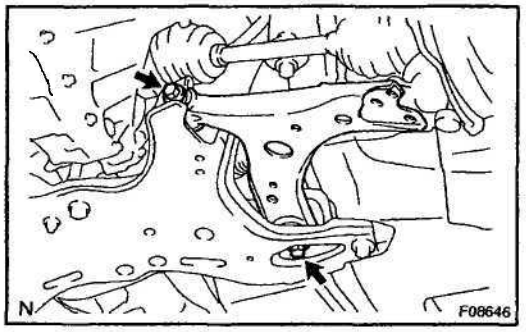

(c) Remove the 2 bolts, nut and lower suspension arm.
Torque: 137 N·m (1,397 kgf·cm, 101 tt-lbf)

HINT:
At the time of installation, after stabilizing the suspension, torque the bolts.

3. A/T LH side:
REMOVE LOWER SUSPENSION ARM

(a) Remove the engine under covers.
(b) Disconnect the RH and LH tie rod ends.
(1) Remove the cotter pin and nut.
Torque: 49 N·m (500 kgf·cm, 36 ft·lbf)

HINT:
At the time of installation, if the holes for a new cotter pin are not aligned, tighten the nut further up to 60°.

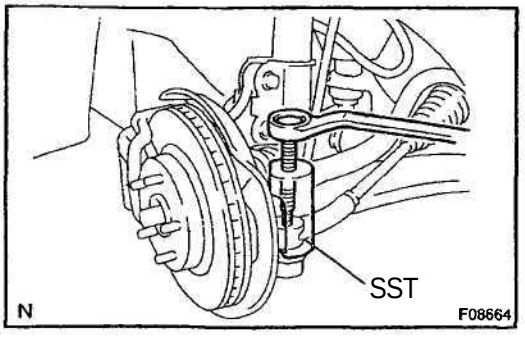

(2) Using SST, disconnect the tie rod end from the steering knuckle.
SST 09610–20012
(3) Employ the same manner described above to the other side.

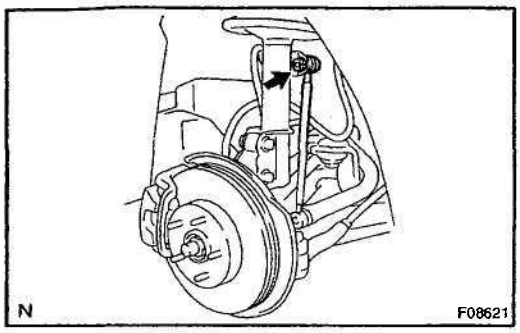

(c) Disconnect the RH and LH stabilizer bar links.
(1) Remove the nut and disconnect the stabilizer bar link from the shock absorber.
Torque: 44 N·m (449 kgf·cm, 32 ft·lbf)

HINT:
If the ball joint turns together with the nut, use a hexagon (5 mm) wrench to hold the stud.

(2) Employ the same manner described above to the other side.

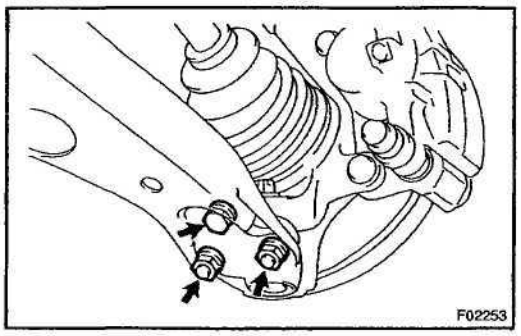

(d) Disconnect the RH and LH lower suspension arms from the lower ball joints.
(1) Remove the bolt and 2 nuts, and disconnect the lower suspension arm from the lower ball joint.
Torque: 142 N·m (1,450 kgf·cm, 105 ft·lbf)
(2) Employ the same manner described above to the other side.

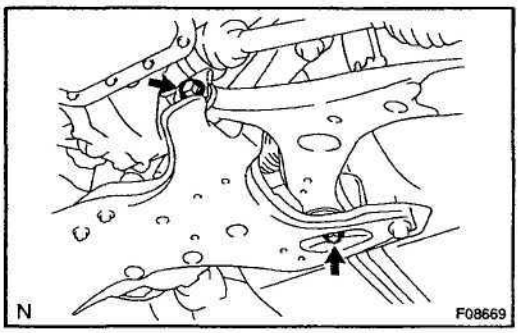

(e) Loosen the lower suspension arm set bolts.
Torque: 137 N·m (1,397 kgf·cm, 101 ft·lbf)

HINT:
At the time of installation, after stabilizing the suspension, torque the bolts.

(f) Remove the engine hood (See page BO–9).

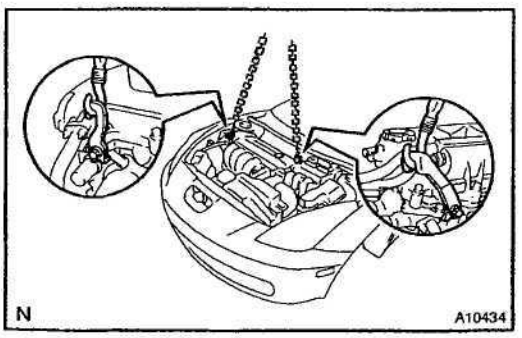

(g) Attach the engine sling device to the engine hangers.
(1) Disconnect the 2 PCV hoses.
(2) Install the No. 1 and No. 2 engine hangers in the correct direction.
Parts No. : (1ZZ-FE engine)
No. 1 engine hanger: 12281-22021
No. 2 engine hanger: 12281-15040 or 12281-15050
Bolt: 91512–B1016
Parts No. : (2ZZ-GE engine)
No. 1 engine hanger: 12281–88600
No. 2 engine hanger: 12282–88600
Bolt: 91512–61020
Torque: 38 N·m (387 kgf·cm, 28 ft·lbf)
(3) Attach the engine chain hoist to the engine hangers.

CAUTION:
Do not attempt to hang the engine by hooking the chain to any other part.

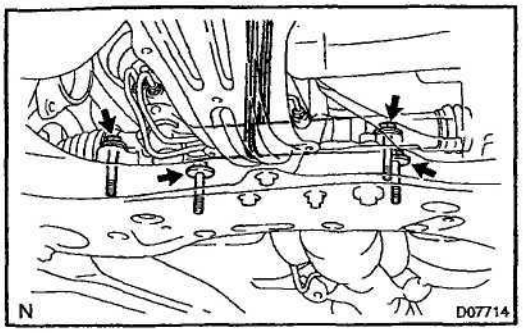

(h) Disconnect the PS gear assembly from the suspension member.
(1) Remove the 4 set bolts.
Torque: 58 N·m (591 kgf·cm, 43 tt-lbf)
(2) Tie the PS gear assembly to suspend it securely.

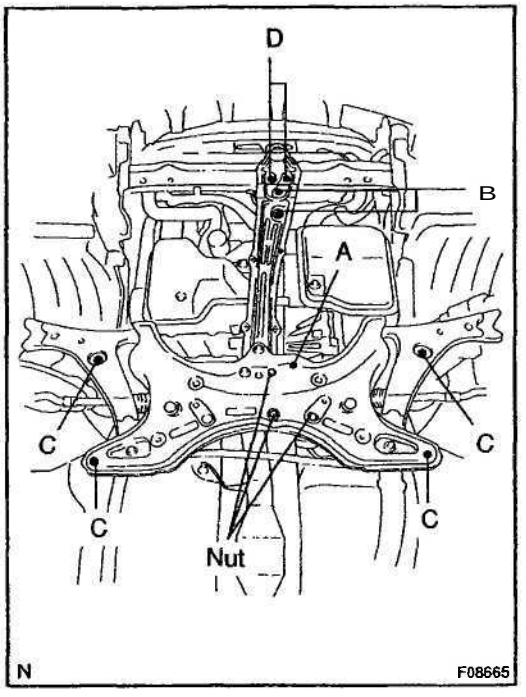

(i) Remove the bolt A and 3 nuts, and disconnect the engine rear mount.
Torque: 52 N·m (530 kgf·cm, 38 ft·lbf)
(j) Remove the 2 bolts (B) and disconnect the engine front mount.
Torque: 52 N·m (530 kgf·cm, 38 ft·lbf)
(k) Using a transmission jack, support the suspension member.
(l) Remove the 6 bolts (C and D) and lower the suspension member.
Torque:
Bolt C: 157 N·m (1,600 kgf·cm, 116 ft·lbf)
Bolt D: 39 N·m (400 kgf·cm, 29 ft·lbf)
(m) Remove the 2 bolts, nut and lower suspension arm.

INSTALLATION

Installation is in the reverse order of removal (See page SA–42).

HINT:

After installation, check the front wheel alignment (See page SA–4).

FRONT LOWER BALL JOINT

COMPONENTS

SA07X-07

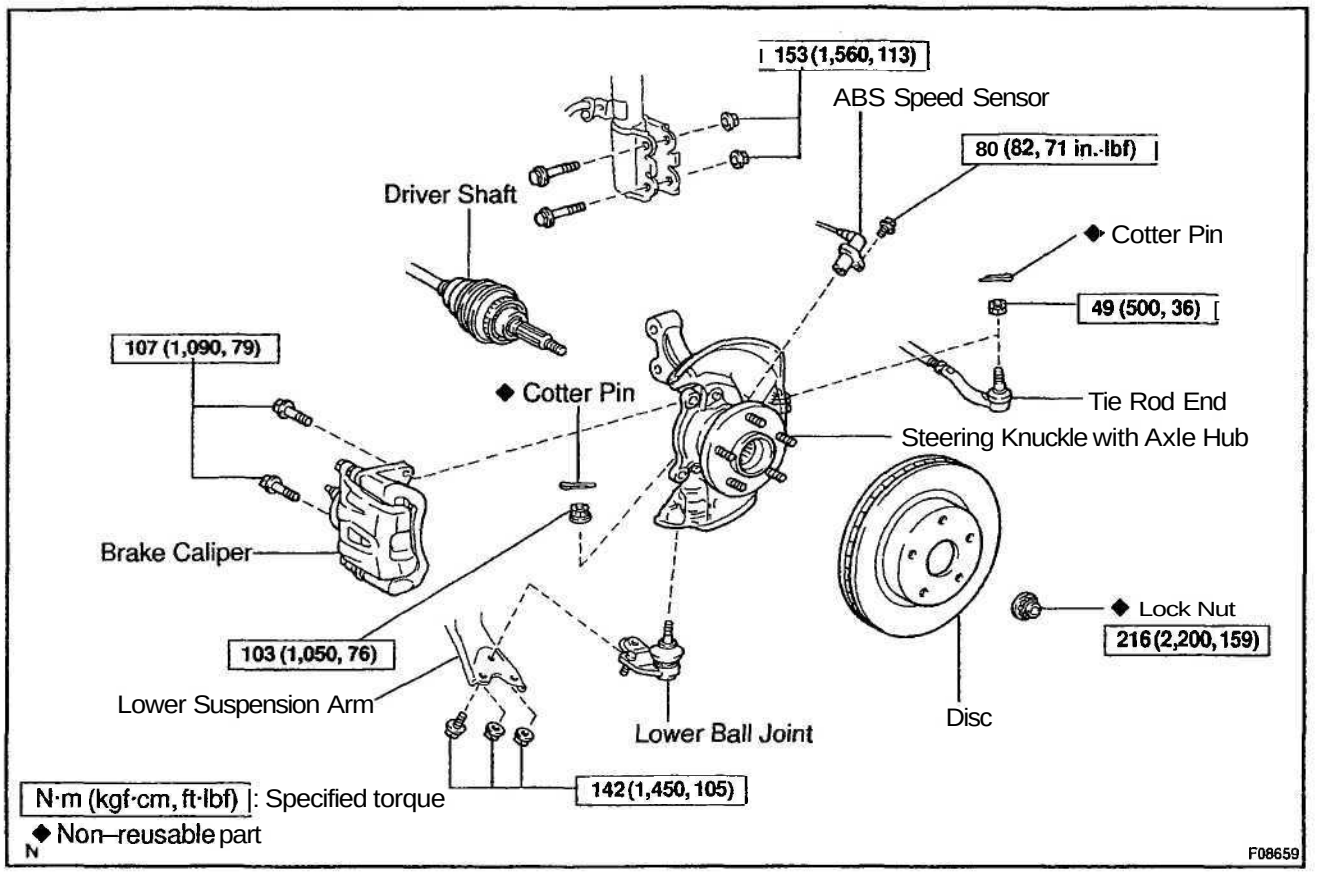

SA07Y-05

REMOVAL

1. REMOVE STEERING KNUCKLE WITH AXLE HUB
(See page SA–12)

2. REMOVE LOWER BALL JOINT

(a) Remove the cotter pin and nut.

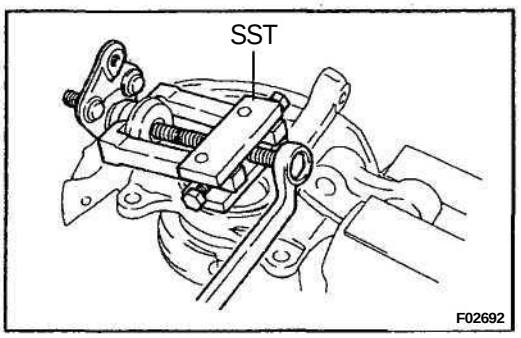

(b) Using SST, remove the lower ball joint.
SST 09628–62011

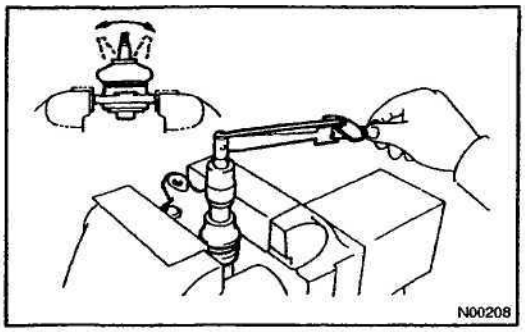

SA1EP-02

INSPECTION

INSPECT LOWER BALL JOINT FOR ROTATION CONDITION

(a) As shown in the illustration, flip the ball joint stud back and forth 5 times, before installing the nut.

(b) Using a torque wrench, turn the nut continuously at a rate of 2 - 4 seconds per 1 turn and take the torque reading on the 5th turn.

Turning torque:

1.0 - 4.9 N·m (10 - 50 kgf cm, 8.7 - 43 in.·lbf)

SA10R-02

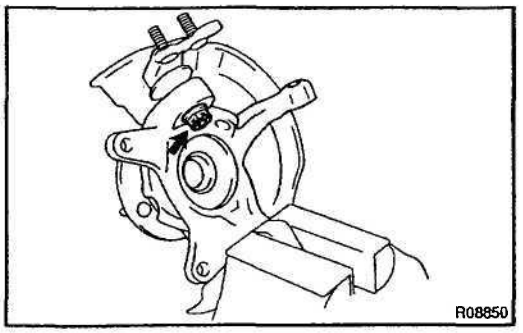

INSTALLATION

1. INSTALL LOWER BALL JOINT

(a) Install the lower ball joint and tighten the nut.
Torque: 103 N·m (1,050 kgf·cm, 76 ft·lbf)

(b) Install a new cotter pin.

If the holes for the cotter pin are not aligned, tighten the nut further up to 60 °.

2. INSTALL STEERING KNUCKLE WITH AXLE HUB
(See page SA–16)

3. CHECK ABS SPEED SENSOR SIGNAL
(See page DI–276)

4. CHECK FRONT WHEEL ALIGNMENT
(See page SA–4)

FRONT STABILIZER BAR

COMPONENTS

SA10H-03

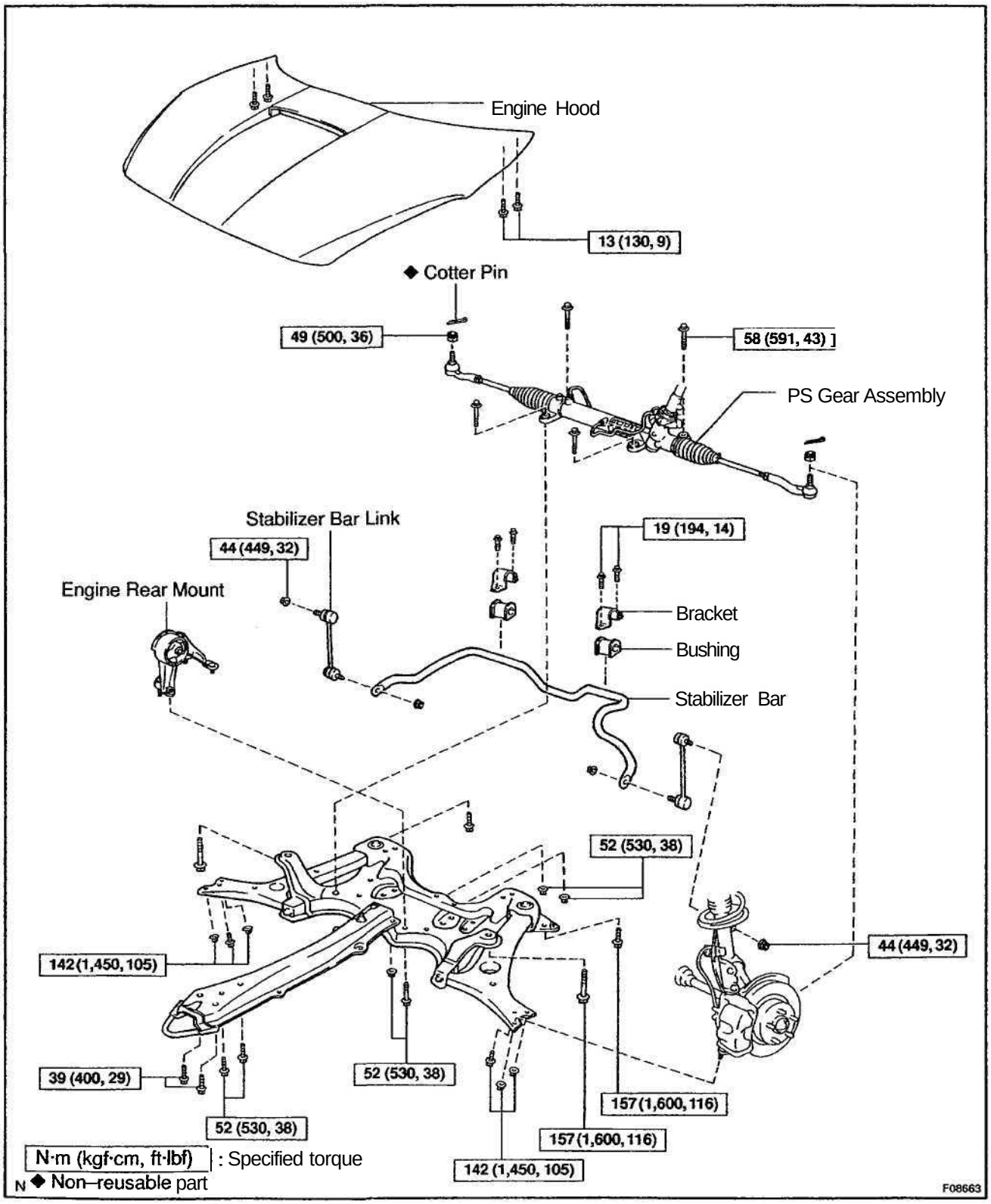

SA101-03

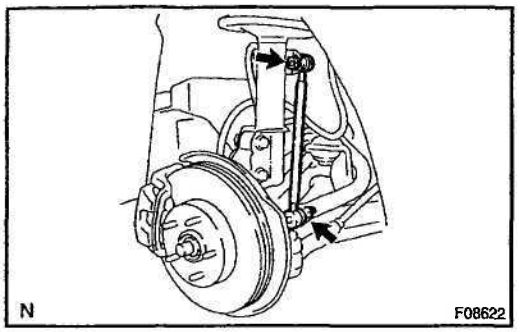

REMOVAL

1. REMOVE STABILIZER BAR LINKS

(a) Remove the 2 nuts and stabilizer bar link.
Torque: 44 N·m (449 kgf-cm, 32 ft·lbf)

HINT:

If the ball joint turns together with the nut, use a hexagon (5 mm) wrench to hold the stud.

(b) Employ the same manner described above to the other side.

2. REMOVE FRONT SUSPENSION MEMBER WITH LOWER SUSPENSION ARM (See page SA–42)

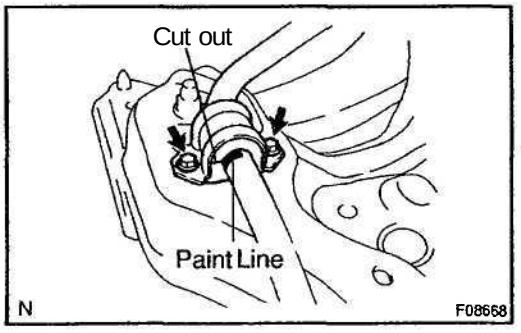

3. REMOVE STABILIZER BAR

(a) Remove the 2 bolts, bracket and bushing.
Torque: 19 N·m (194 kgf·cm, 14 ft·lbf)

HINT:

At the time of installation, please refer to the following items.

- Install the bushing so that the cutout will face to the rear.
- Install the bushing to the outside of the paint line on the stabilizer bar.

(b) Employ the same manner described above to the other side.

(c) Remove the stabilizer bar.

SA1ET-02

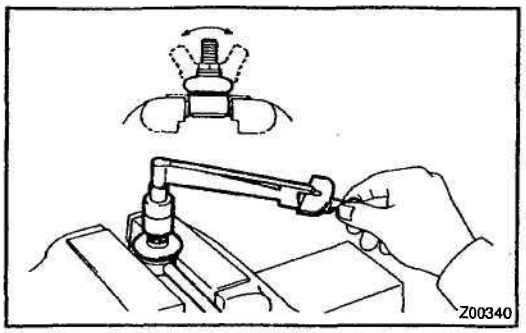

INSPECTION

INSPECT STABILIZER BAR LINK BALL JOINT FOR ROTATION CONDITION

(a) As shown in the illustration, flip the ball joint stud back and forth 5 times, before installing the nut.

(b) Using a torque wrench, turn the nut continuously at a rate of 2 - 4 seconds per 1 turn and take the torque reading on the 5th turn.

Turning torque:
0.05 – 1.0 N·m (0.5 - 10 kgf cm, 0.4 - 8.7 in.·lbf)

INSTALLATION

Installation is in the reverse order of removal (See page SA–51).

HINT:

After installation, check the front wheel alignment (See page SA–4).

REAR AXLE CARRIER

COMPONENTS

SA1P7-01

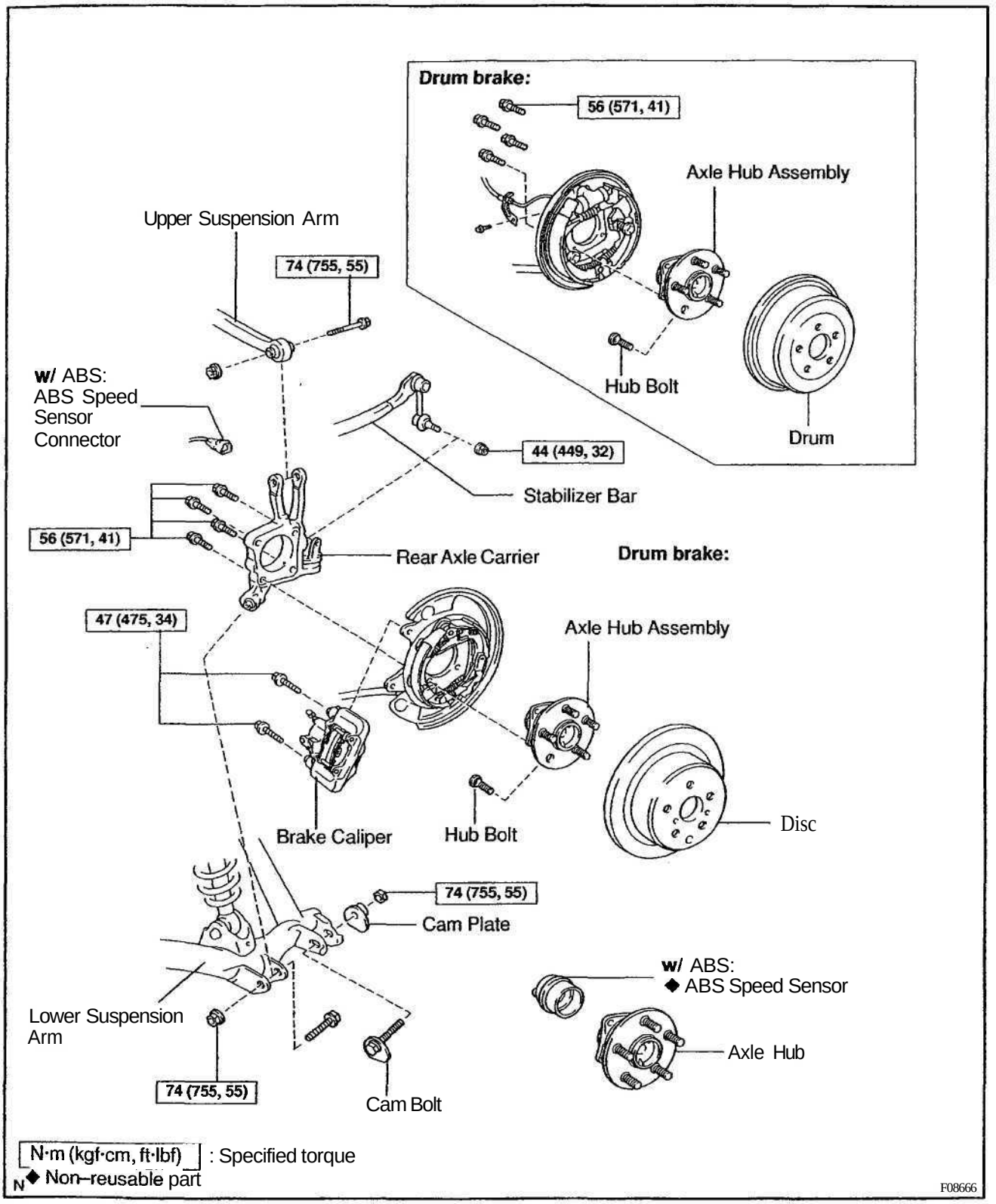

REMOVAL

1. REMOVE REAR WHEEL
Torque: 103 N·m (1,050 kgf·cm, 76 ft·lbf)

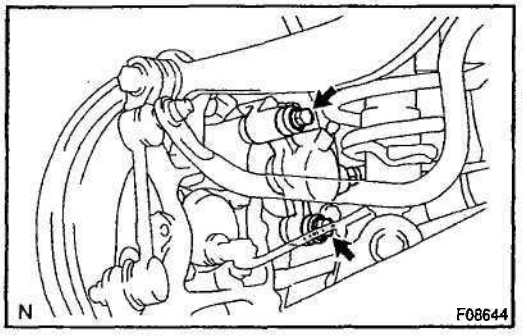

2. **w/ Disc brake:**
REMOVE BRAKE CALIPER AND DISC
(a) Remove the 2 bolts, brake caliper and disc.
Torque: 47 N·m (475 kgf·cm, 34 ft·lbf)
(b) Support the brake caliper securely.
3. w/ Drum brake:
REMOVE BRAKE DRUM

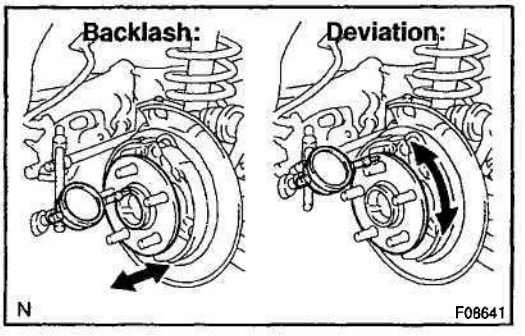

4. **CHECK BEARING BACKLASH AND AXLE HUB DEVIATION**
(a) Using a dial indicator, check the backlash near the center of the axle hub.
Maximum: 0.05 mm (0.0020 in.)
If the backlash exceeds the maximum, replace the axle hub.
(b) Using a dial indicator, check the deviation at the surface of the axle hub outside the hub bolt.
Maximum: 0.07 mm (0.0028 in.)
If the deviation exceeds the maximum, replace the axle hub.
5. **w/** ABS:
DISCONNECT ABS SPEED SENSOR CONNECTOR

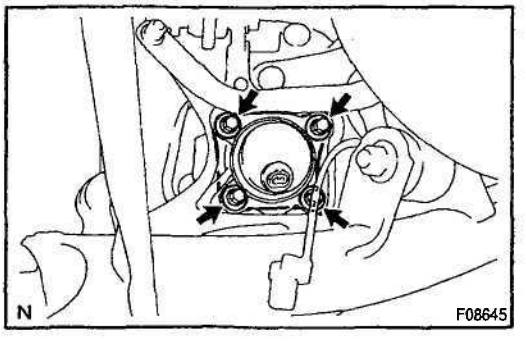

6. REMOVE REAR AXLE HUB
(a) Remove the 4 bolts and axle hub assembly.
Torque: 56 N·m (571 kgf·cm, 41 ft·lbf)
(b) Support the backing plate securely.
7. DISCONNECT STABILIZER BAR LINK
Remove the nut and disconnect stabilizer bar link.
Torque: 44 N·m (449 kgf-cm, 32 ft-lbf)
HINT:
If the ball joint turns together with the nut, use a hexagon (5 mm) wrench to hold the stud.

8. DISCONNECT UPPER SUPPORT SUSPENSION ARM

Remove the bolt and nut, and disconnect the upper suspension arm.

Torque: 74 N·m (755 kgf·cm, 55 tt-lbf)

NOTICE:

Do not turn the nut.

HINT:

At the time of installation, after stabilizing the suspension, torque the bolt.

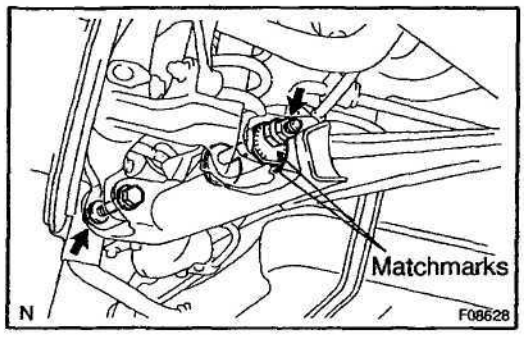

9. REMOVE REAR AXLE CARRIER

(a) Remove the front side bolt and nut of the lower suspension arm.

Torque: 74 N·m (755 kgf·cm, 55 tt-lbf)

HINT:

At the time of installation, after stabilizing the suspension, torque the nut.

(b) Place matchmarks on both the cam plate and lower suspension arm.

(c) Remove the nut, cam plate and cam bolt.

Torque: 74 N m (755 kgf·cm, 55 ft·lbf)

HINT:

At the time of installation, after stabilizing the suspension, torque the nut.

(d) Remove the rear axle carrier.

SA1L5-02

DISASSEMBLY

w/ ABS:

REMOVE ABS SPEED SENSOR

(a) Using a pin punch and hammer, drive out the 2 pins and remove the 2 attachments from SST.
SST 09520–00031 (09520–00040, 09521–00020)

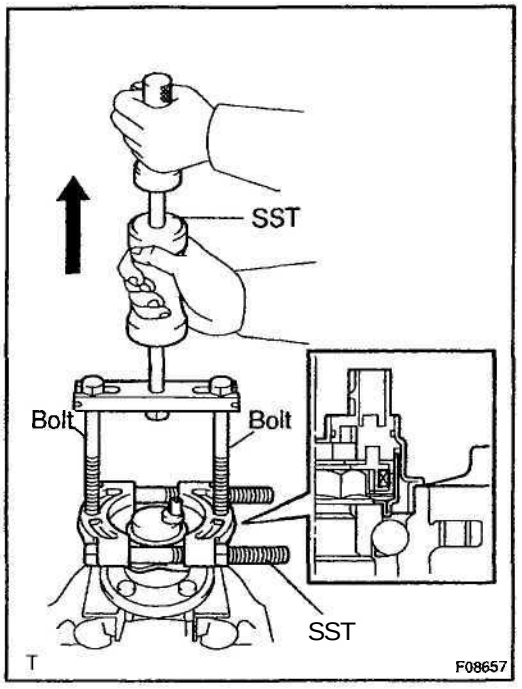

(b) Mount the axle hub assembly in a soft jaw vise.

NOTICE:

Replace the axle hub assembly if it is dropped or a strong shock is given to it.

(c) Using SST and 2 bolts (Diameter: 12 mm, Pitch: 1.5 mm), remove the ABS speed sensor.
SST 09520–00031 (09520–00040, 09521–00020), 09950–00020

NOTICE:

- **Do not allow any foreign matter sticking to the sensor rotor.**
- **Pull out the ABS speed sensor straightly not to damage the sensor rotor.**
- **If damage has occurred to the sensor rotor, replace the axle hub assembly.**
- **Do not scratch the contacting surface of the axle hub and speed sensor.**

SA1PS-01

REASSEMBLY

w/ ABS:

INSTALL NEW ABS SPEED SENSOR

(a) Clean the contacting surface of the axle hub and a new ABS speed sensor.

NOTICE:

Do not allow any foreign matter sticking to the sensor rotor.

(b) Place the ABS speed sensor on the axle hub so that the connector is set at the bottom under the on–vehicle condition.

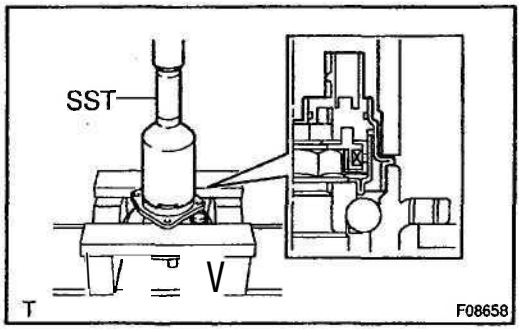

(c) Using SST and a press, install a new ABS speed sensor to the axle hub.
SST 09214–76011

NOTICE:

- **Do not tap the speed sensor with a hammer directly.**
- **Check that there should be no foreign matter on the speed sensor detection portion.**
- **Press in the ABS speed sensor straightly and slowly.**

INSTALLATION

Installation is in the reverse order of removal (See page SA–55).

HINT:

After installation, check the ABS speed sensor signal (See page DI-276) and rear wheel alignment (See page SA–8).

REAR WHEEL HUB BOLT REPLACEMENT

SA1PB-01

1. REMOVE REAR WHEEL

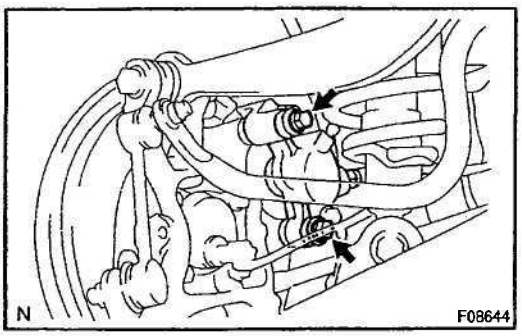

2. w/ Disc brake:
REMOVE BRAKE CALIPER AND DISC

(a) Remove the 2 bolts, brake caliper and disc.
(b) Support the brake caliper securely.

3. w/ Drum brake:
REMOVE BRAKE DRUM

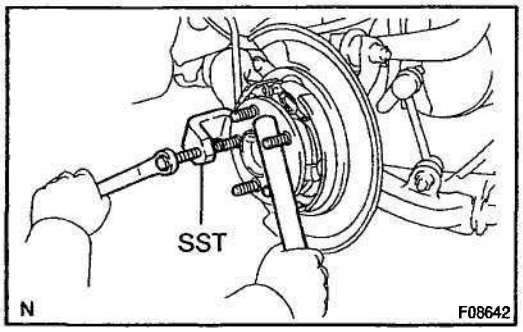

4. REMOVE HUB BOLT

Using SST and a brass bar, remove the hub bolt.
SST 09628–10011

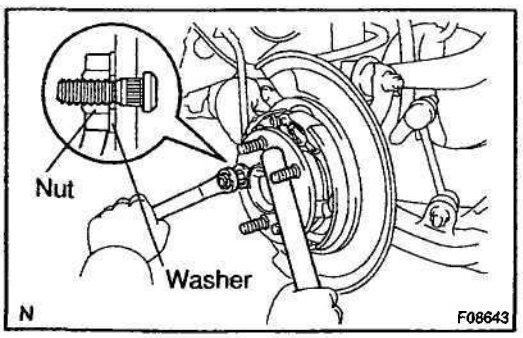

5. INSTALL HUB BOLT

(a) Install a washer and nut to a new hub bolt as shown in the illustration.
(b) Using a brass bar to hold, install the hub bolt by torquing the nut.

6. w/ Drum brake:
INSTALL BRAKE DRUM

7. w/ Disc brake:
INSTALL DISC AND BRAKE CALIPER

Install the disc and brake caliper and 2 bolts.
Torque: 47 N·m (475 kgf·cm, 34 ft·lbf)

8. INSTALL REAR WHEEL
Torque: 103 N·m (1,050 kgf·cm, 76 tt-lbf)

REAR SHOCK ABSORBER

COMPONENTS

SA10U-01

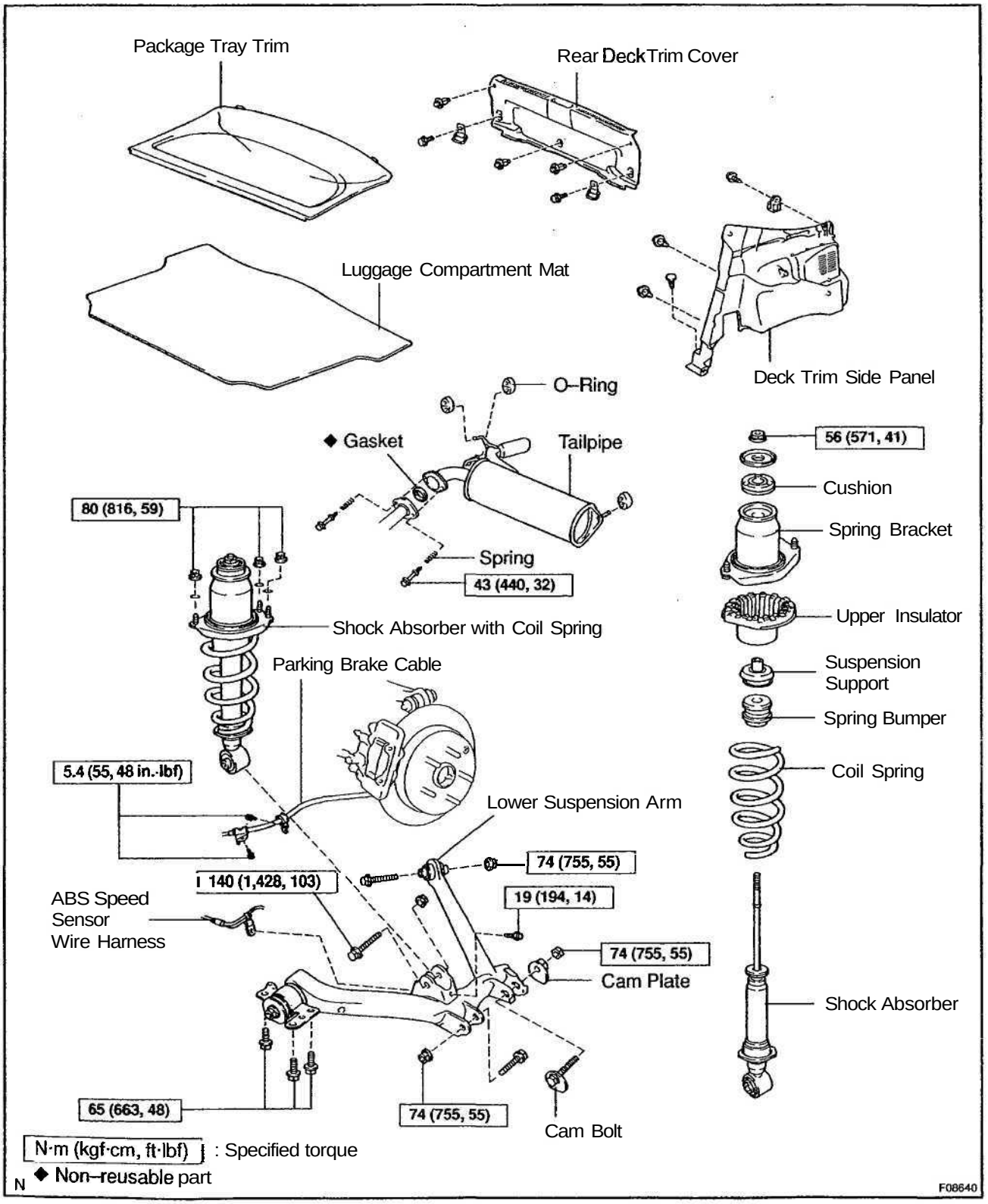

SA1OV-01

REMOVAL

1. REMOVE REAR WHEEL
   Torque: 103 N·m (1,050 kgf·cm, 76 ft·lbf)
2. REMOVE PACKAGE TRAY TRIM
3. REMOVE LUGGAGE COMPARTMENT MAT
4. REMOVE REAR DECK TRIM COVER
5. REMOVE DECK TRIM SIDE PANEL
6. REMOVE REAR LOWER SUSPENSION ARM
   (See page SA-72)

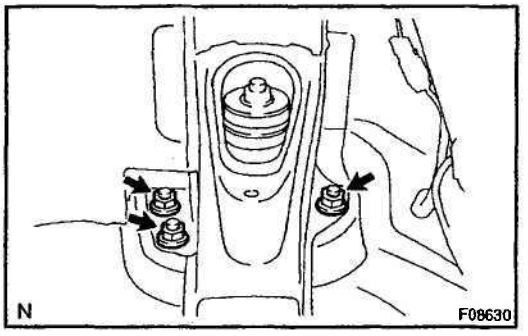

7. REMOVE REAR SHOCK ABSORBER

Remove the 3 nuts and rear shock absorber.
Torque: 80 N·m (816 kgf cm, 59 ft·lbf)

SA1OW-01

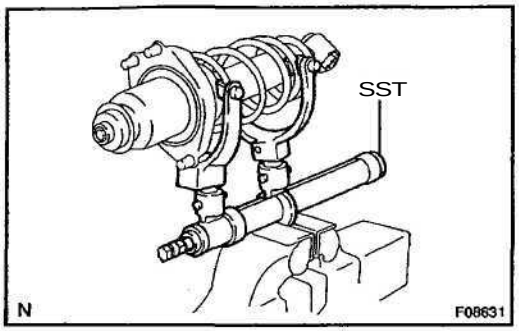

DISASSEMBLY

REMOVE COIL SPRING

(a) Using SST, compress the coil spring.
SST 09727-30021 (09727–00010, 09727-00021, 09727–00031)

NOTICE:
Do not use an impact wrench. It will damage the SST.

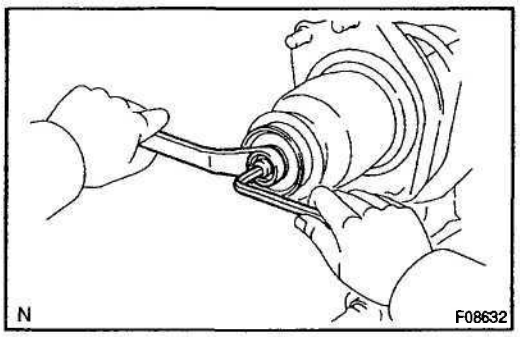

(b) Using a 6 mm hexagon wrench to hold the piston rod, remove the nut.
(c) Remove the washer, cushion, spring bracket, upper insulator, suspension support, spring bumper and coil spring.

SA0BC-04

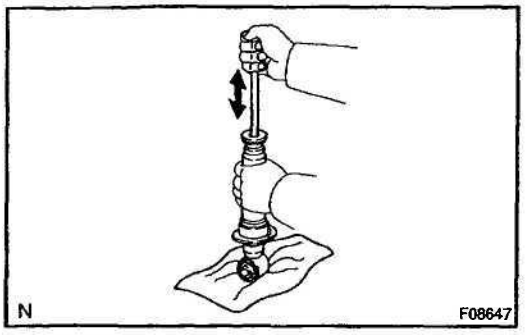

INSPECTION

INSPECT SHOCK ABSORBER

Compress and extend the shock absorber rod and check that there is no abnormal resistance or unusual sound during operation.

If there is any abnormality, replace the shock absorber with a new one.

NOTICE:

When disposing of the shock absorber, see DISPOSAL on page SA–65.

DISPOSAL

1. FULLY EXTEND SHOCK ABSORBER ROD

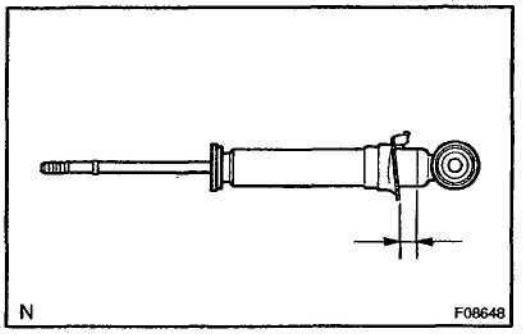

2. DRILL HOLE TO DISCHARGE GAS FROM CYLINDER

Using a drill, make a hole in the cylinder as shown in the illustration to discharge the gas inside.

CAUTION:

- **When drilling, chips may fly out, work carefully.**
- **The gas is colorless, odorless and non–poisonous.**

SA1CX-01

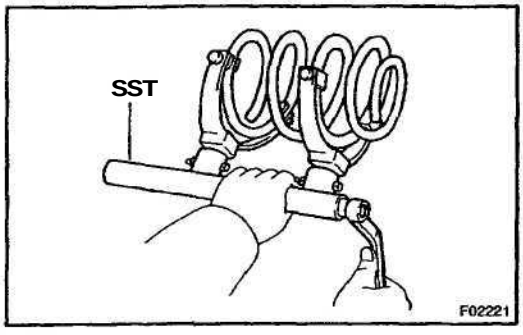

REASSEMBLY

1. INSTALL COIL SPRING

(a) Using SST, compress the coil spring.
SST 09727-30021 (09727-00010, 09727-00021, 09727-00031)

NOTICE:

Do not use an impact wrench. It will damage the SST.

(b) Insert the coil spring to the shock absorber.

HINT:

Fit the lower end of the coil spring into the gap of the spring lower seat.

2. INSTALL SPRING BUMPER AND SUSPENSION SUPPORT

3. INSTALL SPRING BRACKET

(a) Set the upper insulator to the spring bracket.

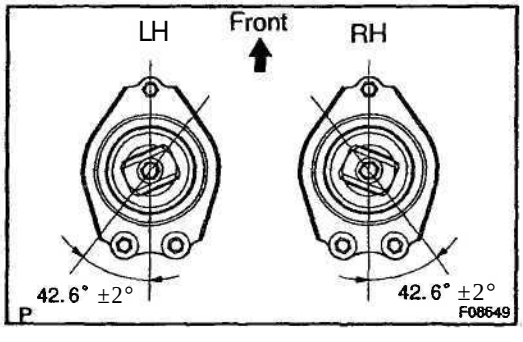

(b) Position the spring bracket with upper insulator as shown in the illustration.

(c) Install the cushion and washer.

(d) Temporarily tighten the center nut.

(e) Remove the SST.
SST 09727-30021 (09727-00010, 09727-00021, 09727-00031)

(f) Recheck the direction of the spring bracket.

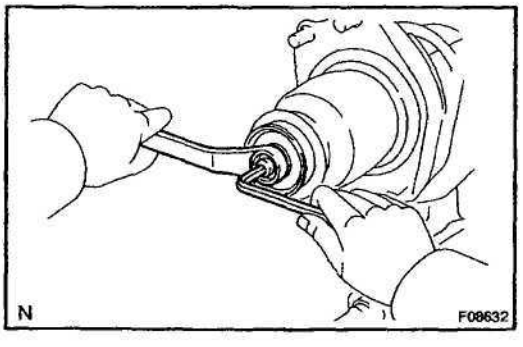

(g) Using a 6 mm hexagon wrench to hold the piston rod, tighten the nut.
Torque: 56 N·m (571 kgf·cm, 41 ft·lbf)

INSTALLATION

Installation is in the reverse order of removal (See page SA–62).

HINT:

After installation, check the rear wheel alignment (See page SA–8).

REAR UPPER SUSPENSION ARM

COMPONENTS

SA1PC-01

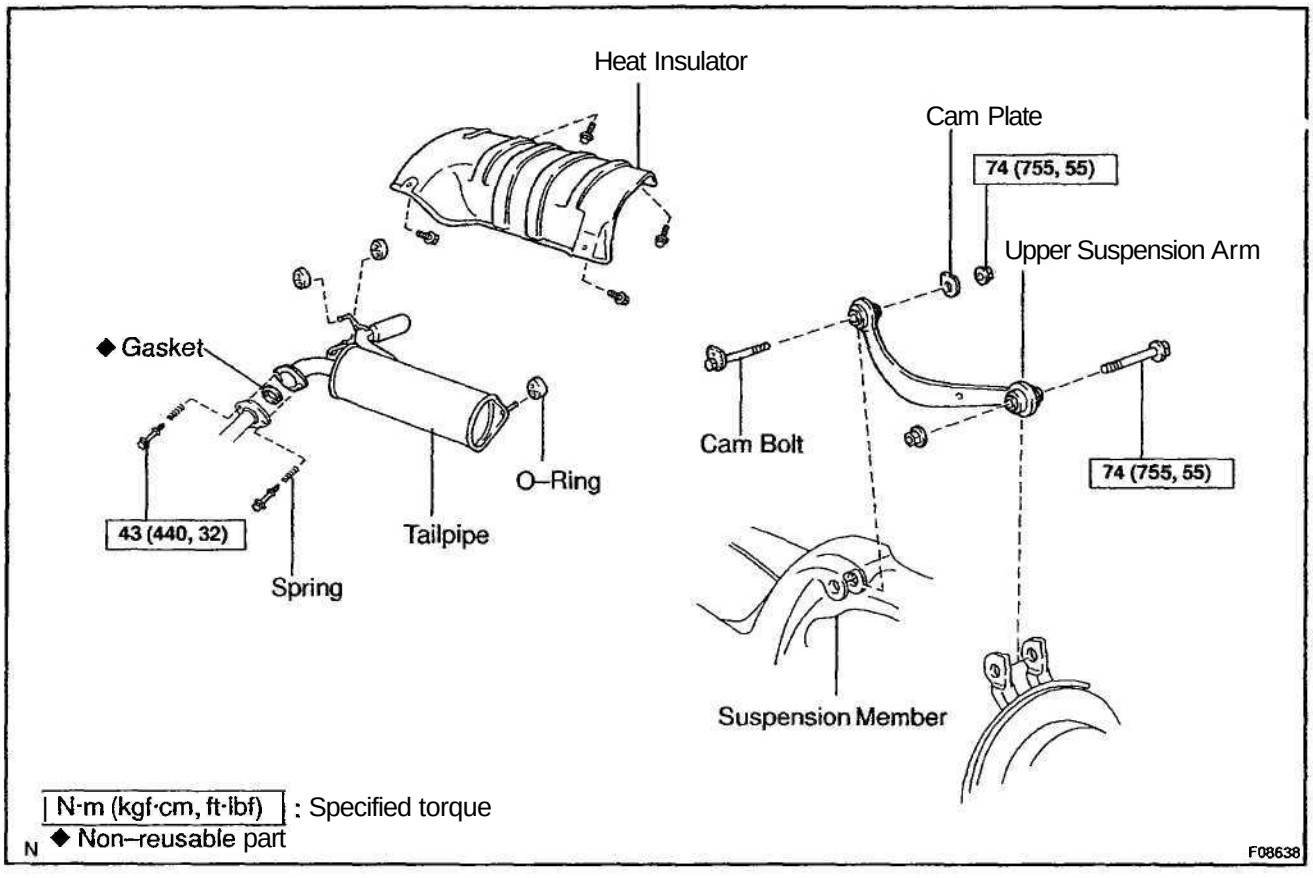

SA1PO–01

REMOVAL

1. REMOVE REAR WHEEL

Torque: 103 N·m (1,050 kgf·cm, 76 ft·lbf)

2. REMOVE TAILPIPE AND HEAT INSULATOR

(a) Remove the 2 bolts, springs, gasket, 3 O–rings and tailpipe.

Torque: 43 N m (440 kgf·cm, 32 ft·lbf)

(b) Remove the 4 bolts and heat insulator.

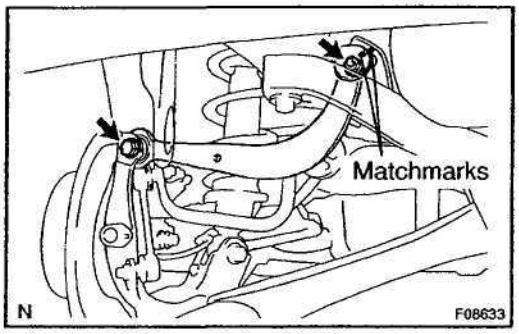

3. REMOVE UPPER SUSPENSION ARM

(a) Place matchmarks on both the cam plate and suspension member.

(b) Remove the nut, cam plate and cam bolt.

Torque: 74 N·m (755 kgf-cm, 55 tt-lbf)

HINT:

At the time of installation, after stabilizing the suspension, torque the nut.

(c) Remove the bolt, nut and upper suspension arm.

Torque: 74 N m (755 kgf·cm, 55 ft·lbf)

NOTICE:

Do not turn the nut.

HINT:

At the time of installation, after stabilizing the suspension, torque the bolt.

INSTALLATION

Installation is in the reverse order of removal (See page SA–69).

HINT:

After installation, check the rear wheel alignment (See page SA–8).

REAR LOWER SUSPENSION ARM

COMPONENTS

SA1PF-01

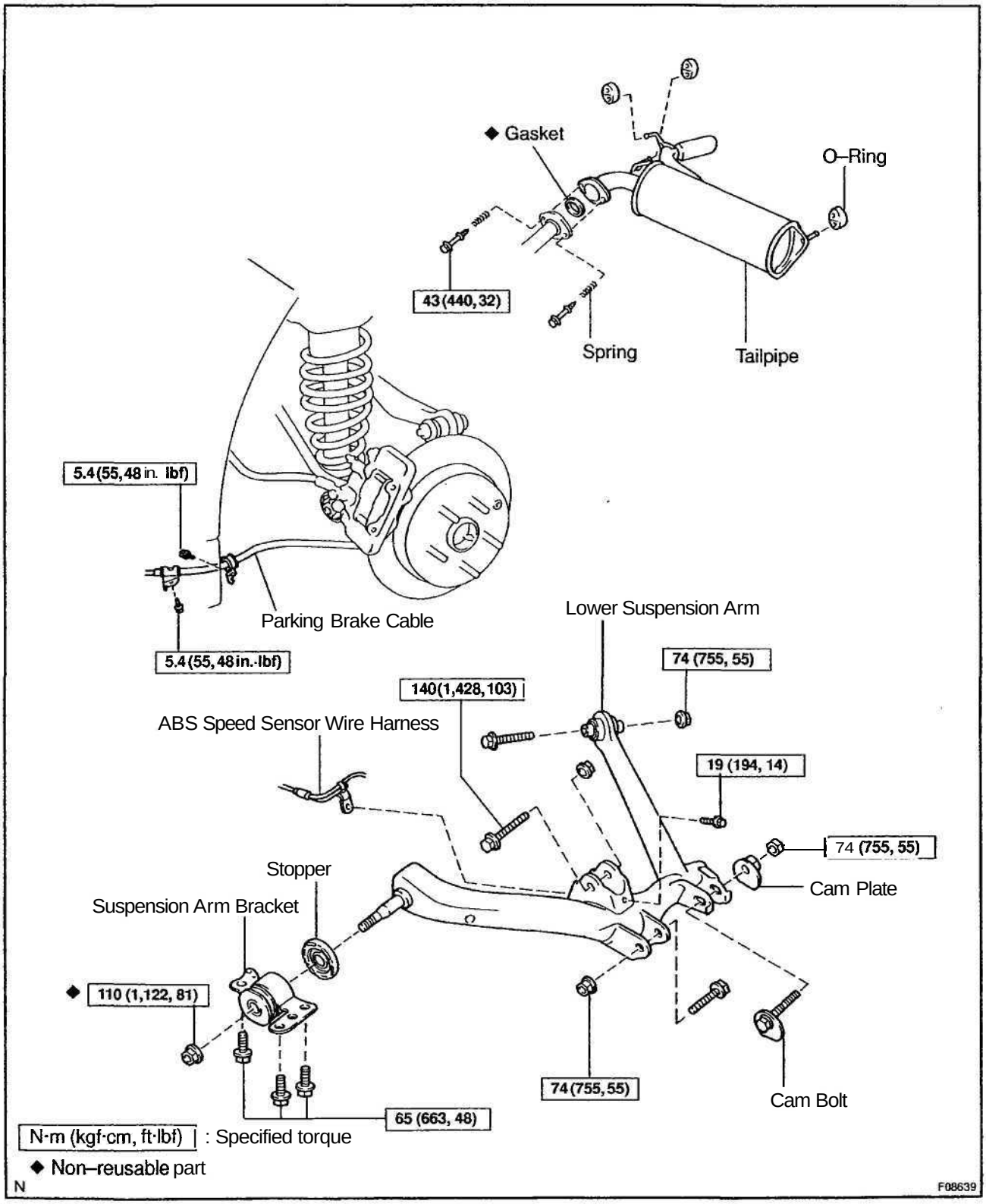

SA1PG-01

REMOVAL

1. **REMOVE REAR WHEEL**
   Torque: 103 N·m (1,050 kgf·cm, 76 ft·lbf)
2. **REMOVE ABS SPEED SENSOR WIRE HARNESS CLAMP**

Remove the bolt and disconnect the ABS speed sensor wire harness clamp.

Torque: 19 N·m (194 kgf·cm, 14 ft·lbf)

3. **REMOVE TAILPIPE**

Remove the 2 bolts, springs, gasket, 3 O–rings and tailpipe.

Torque: 43 N·m (440 kgf·cm, 32 ft·lbf)

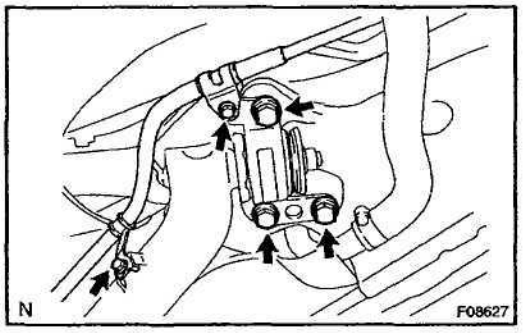

4. **DISCONNECT PARKING BRAKE CABLE CLAMP**

Remove the 2 bolts and disconnect the parking brake cable clamps.

Torque: 5.4 N·m (55 kgf·cm, 48 in.·lbf)

5. **LOOSEN 3 BOLTS ON FRONT SIDE OF LOWER SUSPENSION ARM**
   Torque: 65 N·m (663 kgf·cm, 48 ft·lbf)

HINT:

- Do not remove the bolts.
- At the time of installation, after stabilizing the suspension, torque the bolts.

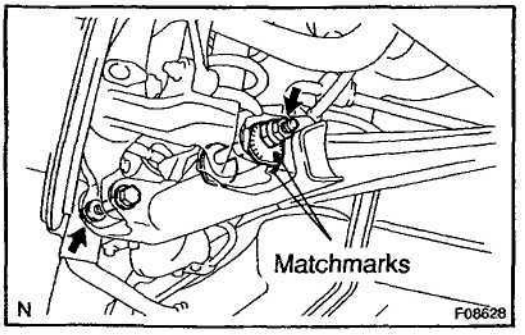

6. **DISCONNECT REAR AXLE CARRIER FROM LOWER SUSPENSION ARM**

(a) Remove the front side bolt and nut.
Torque: 74 N·m (755 kgf·cm, 55 ft·lbf)

HINT:

At the time of installation, after stabilizing the suspension, torque the nut.

(b) Place matchmarks on both the cam plate and lower suspension arm.

(c) Remove the nut, cam plate and cam bolt.

Torque: 74 N·m (755 kgf·cm, 55 ft·lbf)

HINT:

At the time of installation, after stabilizing the suspension, torque the nut.

(d) Disconnect the rear axle carrier from the lower suspension arm.

7. DISCONNECT REAR SHOCK ABSORBER

Remove the bolt and nut and disconnect the rear shock absorber.

Torque: 140 N·m (1,428 kgf·cm, 103 ft·lbf)

NOTICE:

Do not turn the nut.

HINT:

At the time of installation, after stabilizing the suspension, torque the bolt.

8. REMOVE LOWER SUSPENSION ARM

(a) Remove the bolt and nut on the rear side of lower suspension arm.

Torque: 74 N·m (755 kgf·cm, 55 ft·lbf)

HINT:

At the time of installation, after stabilizing the suspension, torque the nut.

(b) Remove the front side 3 bolts and lower suspension arm.

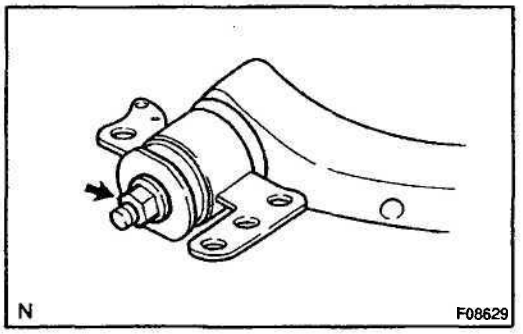

9. REMOVE SUSPENSION ARM BRACKET

Remove the nut, suspension arm bracket and stopper.

Torque: 110 N·m (1,122 kgf·cm, 81 ft·lbf)

HINT:

At the time of installation, after stabilizing the suspension, torque the nut.

INSTALLATION

Installation is in the reverse order of removal (See page SA-72).

HINT:

After installation, check the rear wheel alignment (See page SA-8).

REAR STABILIZER BAR

COMPONENTS

SA1P1-01

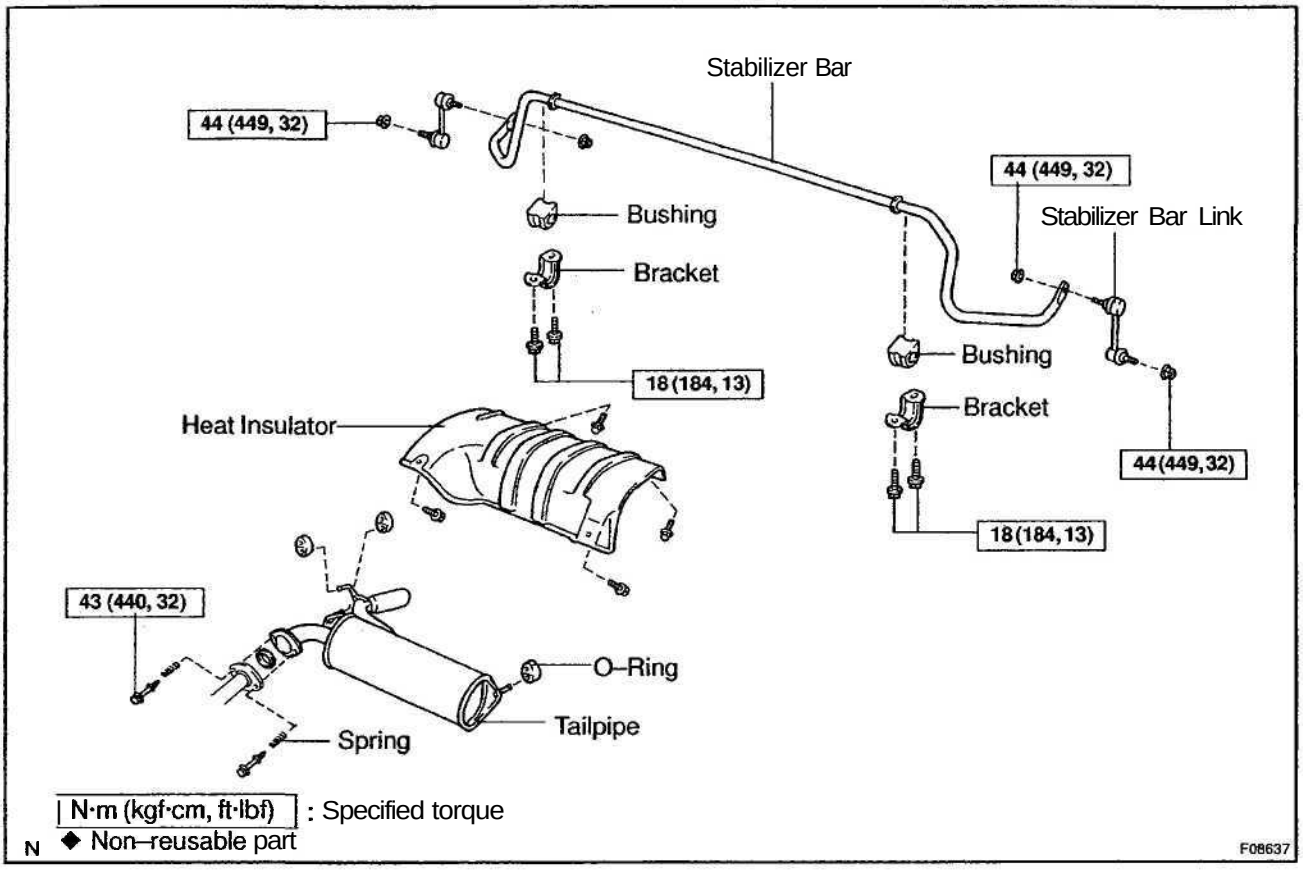

SA1PJ-01

REMOVAL

1. REMOVE REAR WHEEL

Torque: 103 N·m (1,050 kgf·cm, 76 ft·lbf)

2. REMOVE TAILPIPE AND HEAT INSULATOR

(a) Remove the 2 bolts, springs, gasket, 3 O-rings and tailpipe.

Torque: 43 N m (440 kgf·cm, 32 ft·lbf)

(b) Remove the 4 bolts and heat insulator.

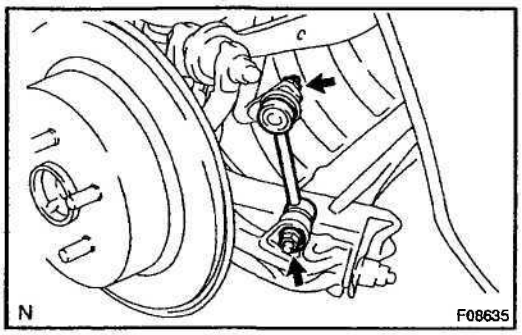

3. REMOVE STABILIZER BAR LINKS

(a) Remove the 2 nuts and stabilizer bar link.

Torque: 44 N·m (449 kgf cm, 32 ft·lbf)

HINT:

If the ball joint turns together with the nut, use a hexagon (5 mm) wrench to hold the stud.

(b) Employ the same manner described above to the other side.

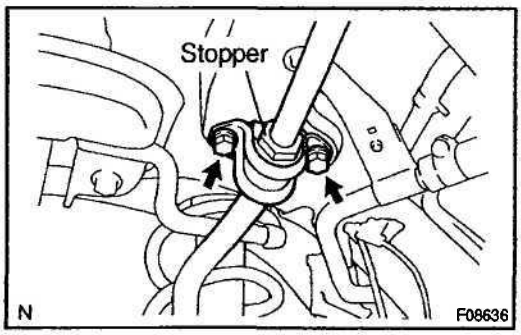

4. REMOVE STABILIZER BAR BRACKETS AND BUSHINGS

(a) Remove the 2 bolts, bracket and bushing.

Torque: 18 N·m (184 kgf·cm, 13 ft·lbf)

HINT:

At the time of installation, install the bushing to the outside of the stopper on the stabilizer bar.

(b) Employ the same manner described above to the other side.

5. REMOVE STABILIZER BAR

SA1FD-02

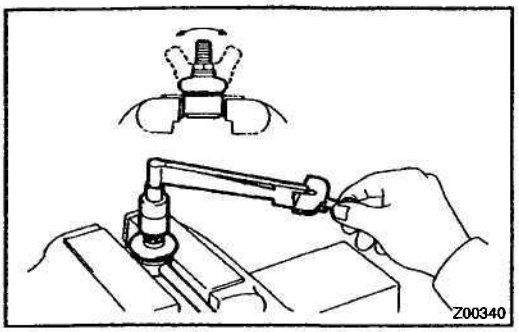

INSPECTION

INSPECT STABILIZER BAR LINK BALL JOINT FOR ROTATION CONDITION

(a) As shown in the illustration, flip the ball joint stud back and forth 5 times, before installing the nut.

(b) Using a torque wrench, turn the nut continuously at a rate of 2 – 4 seconds per 1 turn and take the torque reading on the 5th turn.

Turning torque:
0.05 – 1.0 N·m (0.5 – 10 kgf cm, 0.4 - 8.7 in.·lbf)

INSTALLATION

Installation is in the reverse order of removal (See page SA-76).

BRAKE

BRAKE SYSTEM BR–1
TROUBLESHOOTING BR–2
BRAKE FLUID BR–4
BRAKE PEDAL BR–6
PARKING BRAKE LEVER BR–8
BRAKE MASTER CYLINDER BR-9
BRAKE BOOSTER ASSEMBLY BR–13
FRONT BRAKE PAD BR–17
FRONT BRAKE CALIPER BR–20
REAR DRUM BRAKE BR-28
REAR BRAKE PAD BR-33
REAR BRAKE CALIPER BR-36
PARKING BRAKE BR–42
PROPORTIONING VALVE (P VALVE) BR–47
ABS ACTUATOR BR–48
FRONT SPEED SENSOR BR-55
REAR SPEED SENSOR BR-58

EE

BR

BRAKE SYSTEM

PRECAUTION

BR0PW-01

- **Care must be taken to replace each part properly as it could affect the performance of the brake system and result in a driving hazard. Replace the parts with parts of the same part number or equivalent.**
- **It is very important to keep parts and the area clean when repairing the brake system.**
- **If the vehicle is equipped with a mobile communication system, refer to the precaution in the IN section.**

TROUBLESHOOTING

PROBLEM SYMPTOMS TABLE

BR0PX–03

Use the table below to help you find the cause of the problem. The numbers indicate the priority of the likely cause of the problem. Check each part in order. If necessary, replace these parts.

Symptom	Suspect Area	See page
Low pedal or spongy pedal	1. Fluid leaks for brake system	DI–323
	2. Air in brake system	BR–4
	3. Piston seals (Worn or damaged)	BR–20
		BR–36
		BR–28
	4. Rear brake shoe clearance (Out of adjustment)	BR–32
	5. Master cylinder (Faulty)	BR–9
	6. Booster push rod (Out of adjustment)	BR-16
Brake drag	1. Brake pedal freeplay (Minimum)	BR–6
	2. Parking brake lever travel (Out of adjustment)	BR–8
	3. Parking brake wire (Sticking)	–
	4. Rear brake shoe clearance (Out of adjustment)	BR-32
		BR–46
	5. Pad or lining (Cracked or distorted)	BR-17
		BR-33
		BR-28
		BR–42
	6. Piston (Stuck)	BR-20
		BR–36
		BR-28
	7. Piston (Frozen)	BR-20
		BR–36
		BR-28
	8. Anchor, tension or return spring (Faulty)	BR–28
		BR–42
	9. Booster push rod (Out of adjustment)	BR–16
	10. Vacuum leaks for booster system	BR–13
	11. Master cylinder (Faulty)	BR–9
Brake pull	1. Piston (Stuck)	BR-20
		BR–36
		BR-28
	2. Pad or lining (Oily)	BR-17
		BR–33
		BR-28
		BR–42
	3. Piston (Frozen)	BR–20
		BR–36
		BR-28
	4. Disc (Scored)	BR-24
		BR–39
	5. Pad or lining (Cracked or distorted)	BR-17
		BR–33
		BR–28
		BR–42

BR

Hard pedal but brake inefficient	1. Fluid leaks for brake system	DI-323
	2. Air in brake system	BR-4
	3. Pad or lining (Worn)	BR-17
		BR-33
		BR-28
		BR-42
	4. Pad or lining (Cracked or distorted)	BR-17
		BR-33
		BR-28
		BR-42
	5. Rear brake shoe clearance (Out of adjustment)	BR-32
		BR-46
	6. Pad or lining (Oily)	BR-17
		BR-33
		BR-28
		BR-42
	7. Pad or lining (Glazed)	BR-17
		BR-33
		BR-28
		BR-42
	8. Disc (Scored)	BR-24
		BR-39
	9. Booster push rod (Out of adjustment)	BR-16
	10. Vacuum leaks for booster system	BR-13
Noise from brakes	1. Pad or lining (Cracked or distorted)	BR-17
		BR-33
		BR-28
		BR-42
	2. installation bolt (Loose)	BR-20
		BR-36
	3. Disc (Scored)	BR-24
		BR-39
	4. Pad support plate (Loose)	BR-17
	5. Sliding pin (Worn)	BR-20
	6. Pad or lining (Dirty)	BR-17
		BR-33
		BR-28
		BR-42
	7. Pad or lining (Glazed)	BR-17
		BR-33
		BR-28
		BR-42
	8. Anchor, tension or return spring (Faulty)	BR-28
		BR-42
	9. Anti-squeal shim (Damaged)	BR-17
		BR-33
	10. Shoe hold-down spring (Damaged)	BR-28
		BR-42

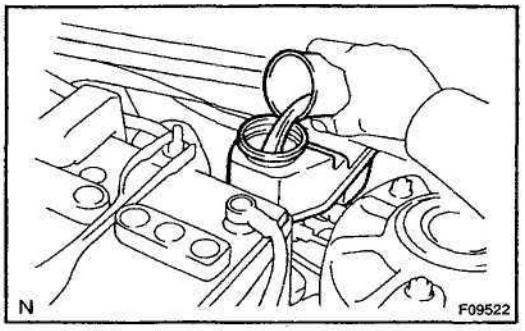

BRAKE FLUID

BR0PY-02

BLEEDING

HINT:

If any work is done on the brake system or if air in the brake lines is suspected, bleed the air from the brake system.

NOTICE:

Do not let brake fluid remain on a painted surface. Wash it off immediately.

1. FILL BRAKE RESERVOIR WITH BRAKE FLUID

Fluid: SAE J1703 or FMVSS No. 116 DOT3

2. REMOVE BATTERY

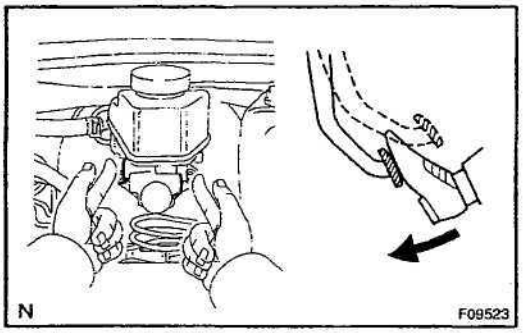

3. BLEED MASTER CYLINDER

HINT:

If the master cylinder has been disassembled or if the reservoir becomes empty, bleed the air from the master cylinder.

(a) Disconnect the brake lines from the master cylinder.
SST 09023–00100

(b) Slowly depress the brake pedal and hold it.

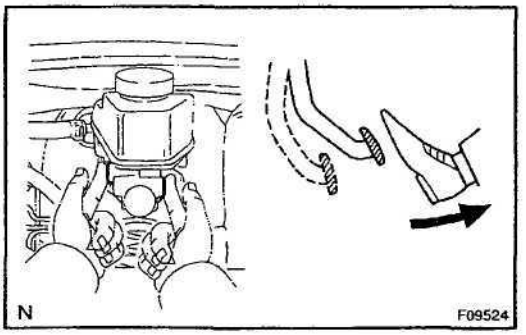

(c) Block off the outlet plug with your finger and release the brake pedal.

(d) Repeat (b) and (c) 3 or 4 times.

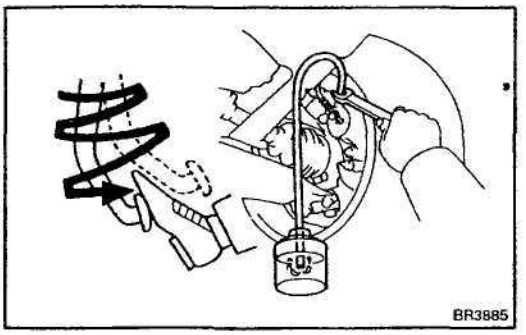

4. BLEED BRAKE LINE

(a) Connect the vinyl tube to the caliper.

(b) Depress the brake pedal several times, then loosen the bleeder plug with the pedal held down.

(c) At the point when fluid stops coming out, tighten the bleeder plug, then release the brake pedal.

(d) Repeat (b) and (c) until all the air in the fluid has been bled out.

(e) Repeat the above procedure to bleed the air out of the brake line for each wheel.

5. CHECK FLUID LEVEL IN RESERVOIR

Check the fluid level and add fluid if necessary.

Fluid: SAE J1703 or FMVSS No. 116 DOT3

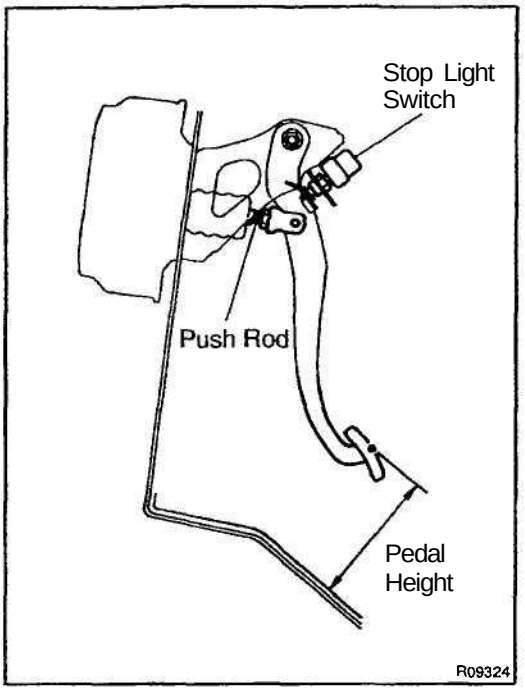

BRAKE PEDAL

ON–VEHICLE INSPECTION

BR0PZ-02

1. CHECK PEDAL HEIGHT

Pedal height from asphalt sheet:
139.8 – 149.8 mm (5.504 - 5.898 in.)

If the pedal height is incorrect, adjust it.

2. IF NECESSARY, ADJUST PEDAL HEIGHT

(a) Remove the lower No. 1 panel and finish panel.
(b) Disconnect the connector from the stop light switch.
(c) Loosen the stop light switch lock nut and remove the stop light switch.
(d) Loosen the clevis lock nut.
(e) Adjust the pedal height by turning the pedal push rod.
(f) Tighten the clevis lock nut.
Torque: 25 N·m (260 kgf·cm, 19 ft·lbf)
(g) Install the stop light switch.
(h) Connect the connector to the stop light switch.
(i) Push the brake pedal in 5 - 15 mm (0.20 - 0.59 in.), turn the stop light switch to lock the nut in the position where the stop light goes off.
(j) Push the brake pedal in 5 – 15 mm (0.20 - 0.59 in.), check that stop light lights up.
(k) After adjusting the pedal height, check the pedal freeplay.

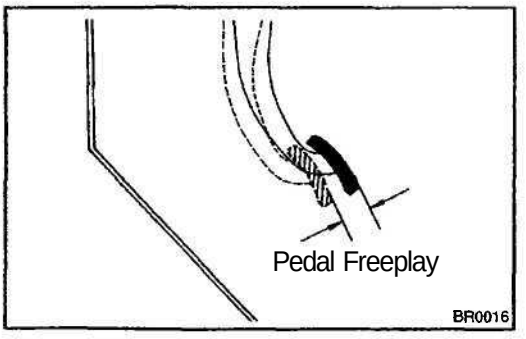

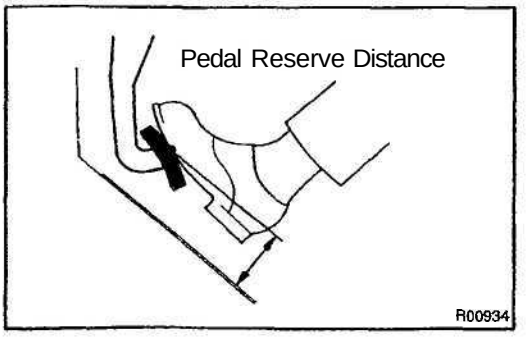

3. CHECK PEDAL FREEPLAY

(a) Stop the engine and depress the brake pedal several times until there is no more vacuum left in the booster.
(b) Push in the pedal until the beginning of the resistance is felt. Measure the distance, as shown.
Pedal freeplay: 1 – 6 mm (0.04 - 0.24 in.)

If incorrect, check the stop light switch clearance.
If the clearance is OK, then troubleshoot the brake system.

Stop light switch clearance:
0.5 - 2.4 mm (0.020 - 0.094 in.)

4. CHECK PEDAL RESERVE DISTANCE

Release the parking brake lever.
With engine running, depress the pedal and measure the pedal reserve distance, as shown.

Pedal reserve distance from asphalt sheet at 490 N (50 kgf, 110.2 lbf): More than 85 mm (3.35 in.)

If incorrect, troubleshoot the brake system.

BR

BR145-01

COMPONENTS

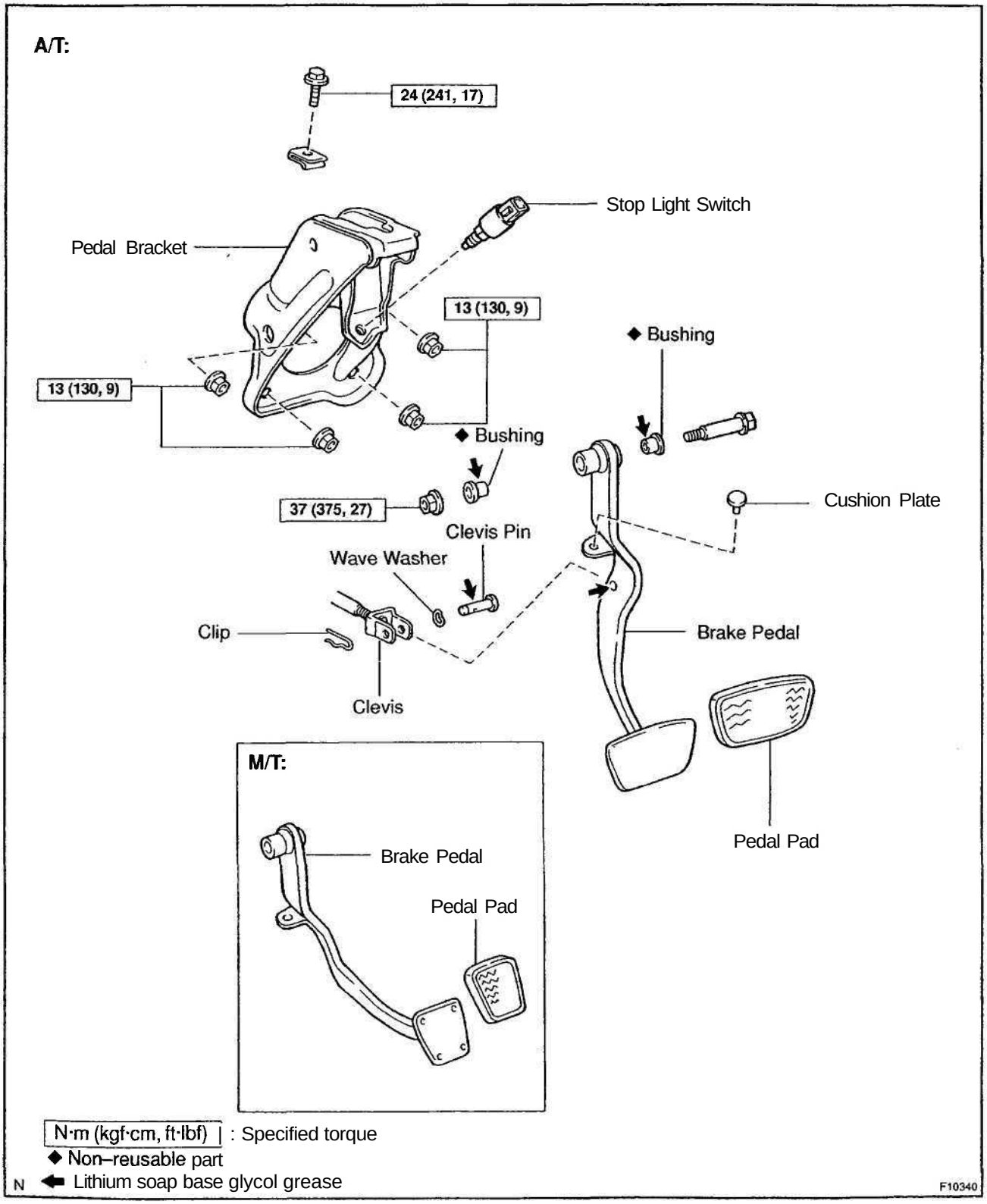

BR

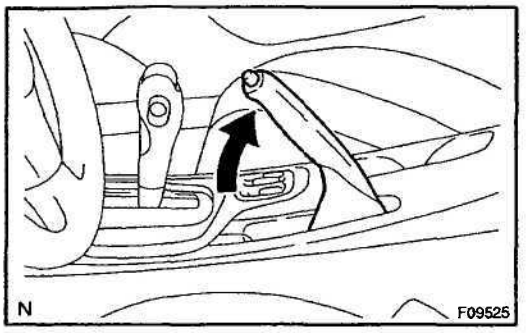

PARKING BRAKE LEVER
ON–VEHICLE INSPECTION

8R0Q0–02

1. CHECK PARKING BRAKE LEVER TRAVEL

Pull the parking brake lever all the way up, and count the number of clicks.

Parking brake lever travel at 196 N (20 kgf, 44.1 lbf): 7 – 8 clicks

If incorrect, adjust the parking brake.

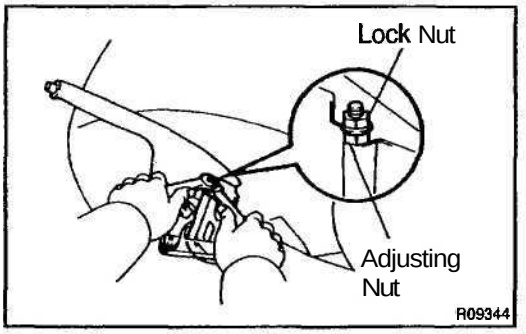

2. IF NECESSARY, ADJUST PARKING BRAKE

HINT:

Before adjusting the parking brake, make sure that the rear brake shoe clearance has been adjusted. For shoe clearance adjustment, see step 1 on page BR–45 or see step 2 on page BR–32.

(a) Remove the console box.

(b) Loosen the lock nut and turn the adjusting nut until the lever travel is correct.

(c) Tighten the lock nut.

Torque: 5.4 N·m (55 kgf·cm, 48 in.·lbf)

(d) Install the console box.

BRAKE MASTER CYLINDER

COMPONENTS

BP9Q1-02

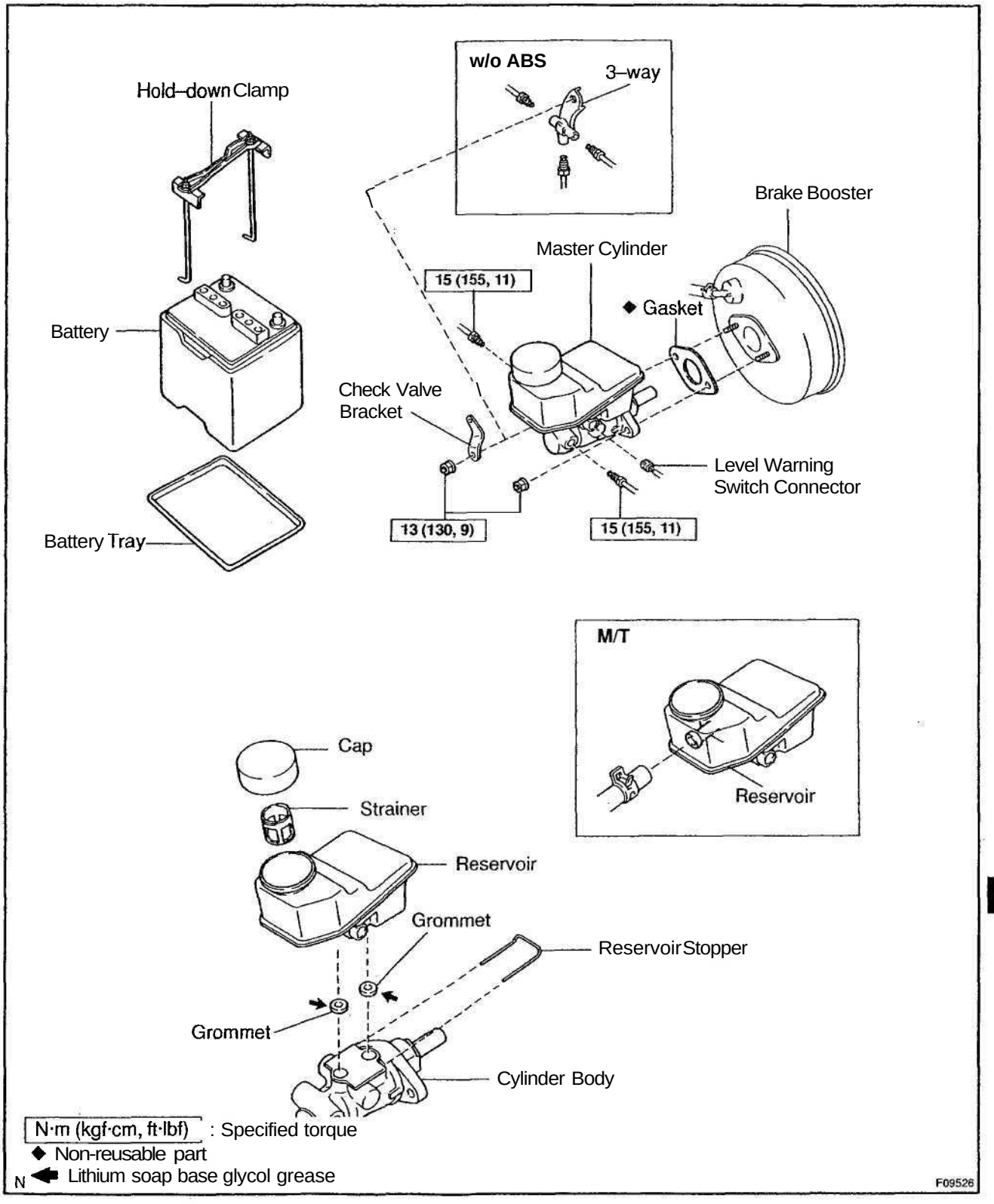

BR

BR0G2-02

REMOVAL

1. REMOVE BATTERY
2. DISCONNECT LEVEL WARNING SWITCH CONNECTOR
3. DRAW OUT FLUID WITH SYRINGE

NOTICE:

Do not let brake fluid remain on a painted surface. Wash it off immediately.

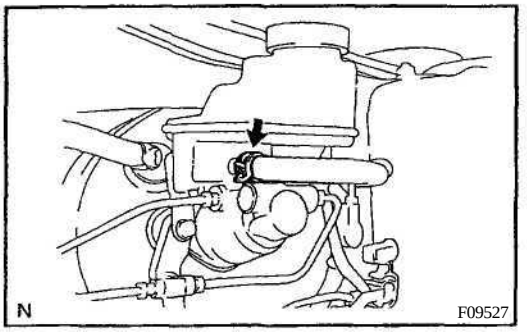

4. **M/T:**
   DISCONNECT RESERVOIR HOSE

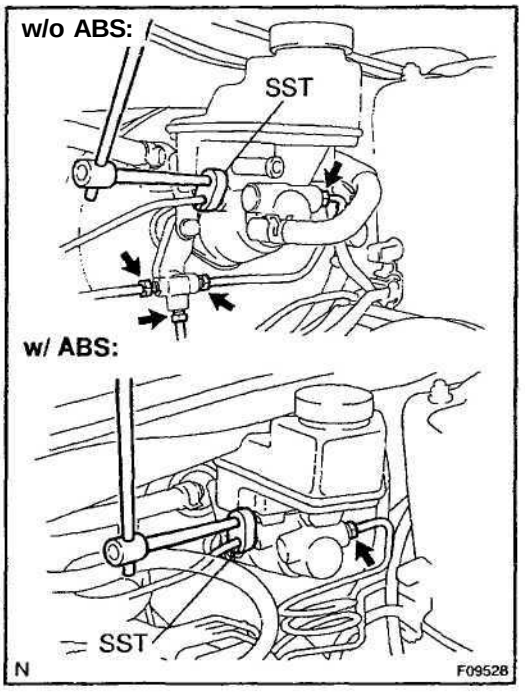

5. **DISCONNECT BRAKE LINE**

(a) w/o ABS:
Using SST, disconnect the 5 brake lines from the master cylinder and 3-way union.
SST 09023–00100
Torque: 15 N·m (155 kgf cm, 11 ft·lbf)

(b) w/ ABS:
Using SST, disconnect the 2 brake lines from the master cylinder.
SST 09023–00100
Torque: 15 N·m (155 kgf·cm, 11 ft lbf)

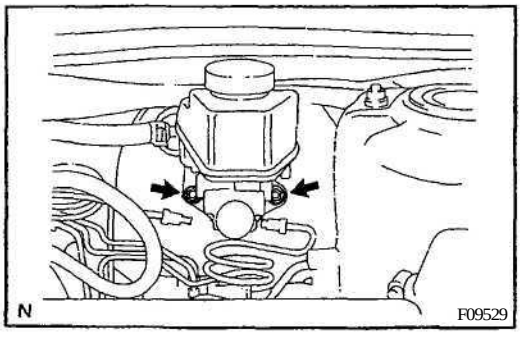

6. **REMOVE MASTER CYLINDER**

(a) Remove the 2 mounding nuts.
Torque: 13 N·m (130 kgf·cm, 9 ft·lbf)

(b) w/o ABS:
Pull out the check valve bracket, 3-way and master cylinder.

(c) w/ ABS:
Pull out the check valve bracket and master cylinder.

(d) Remove the gasket from the master cylinder.

BR

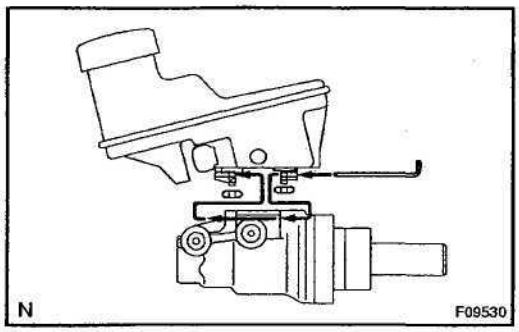

7. REMOVE RESERVOIR

(a) Pull out the reservoir stopper.

HINT:

At the time of installation, make sure to insert the reservoir stopper through holes of the reservoir and the master cylinder groove.

(b) Remove the reservoir and 2 grommets.

(c) Remove the cap and strainer from the reservoir.

BR0AJ–03

INSTALLATION

Installation is in the reverse order of removal (See page BR–10).

HINT:

- Before installation, adjust length of brake booster push rod (See page BR–16).
- After installation, fill the brake reservoir with brake fluid, bleed the brake system (See page BR–4), and check for leaks.
- Check and adjust brake pedal (See page BR–6).

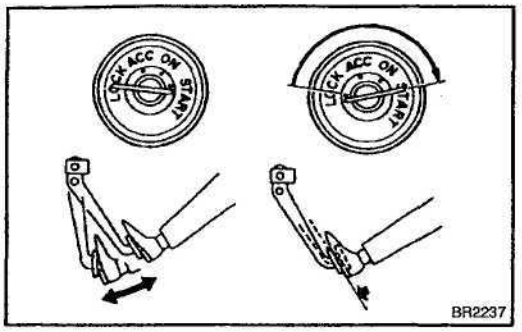

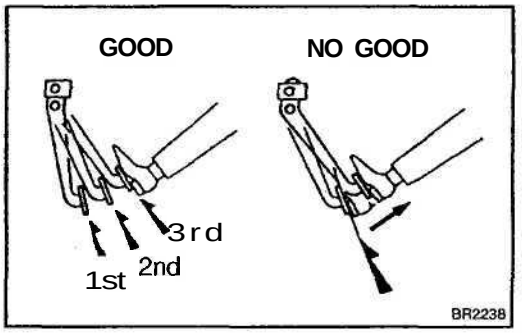

BRAKE BOOSTER ASSEMBLY

BR007-01

ON–VEHICLE INSPECTION

1. OPERATING CHECK

(a) Depress the brake pedal several times with the engine off and check that there is no change in the pedal reserve distance.

(b) Depress the brake pedal and start the engine. If the pedal goes down slightly, operation is normal.

2. AIR TIGHTNESS CHECK

(a) Start the engine and stop it after 1 or 2 minutes. Depress the brake pedal several times slowly.

If the pedal goes down farthest the 1st time, but gradually rises after the 2nd or 3rd time, the booster is air tight.

(b) Depress the brake pedal while the engine is running, and stop the engine with the pedal depressed. If there is no change in the pedal reserve travel after holding the pedal for 30 seconds, the booster is air tight.

COMPONENTS

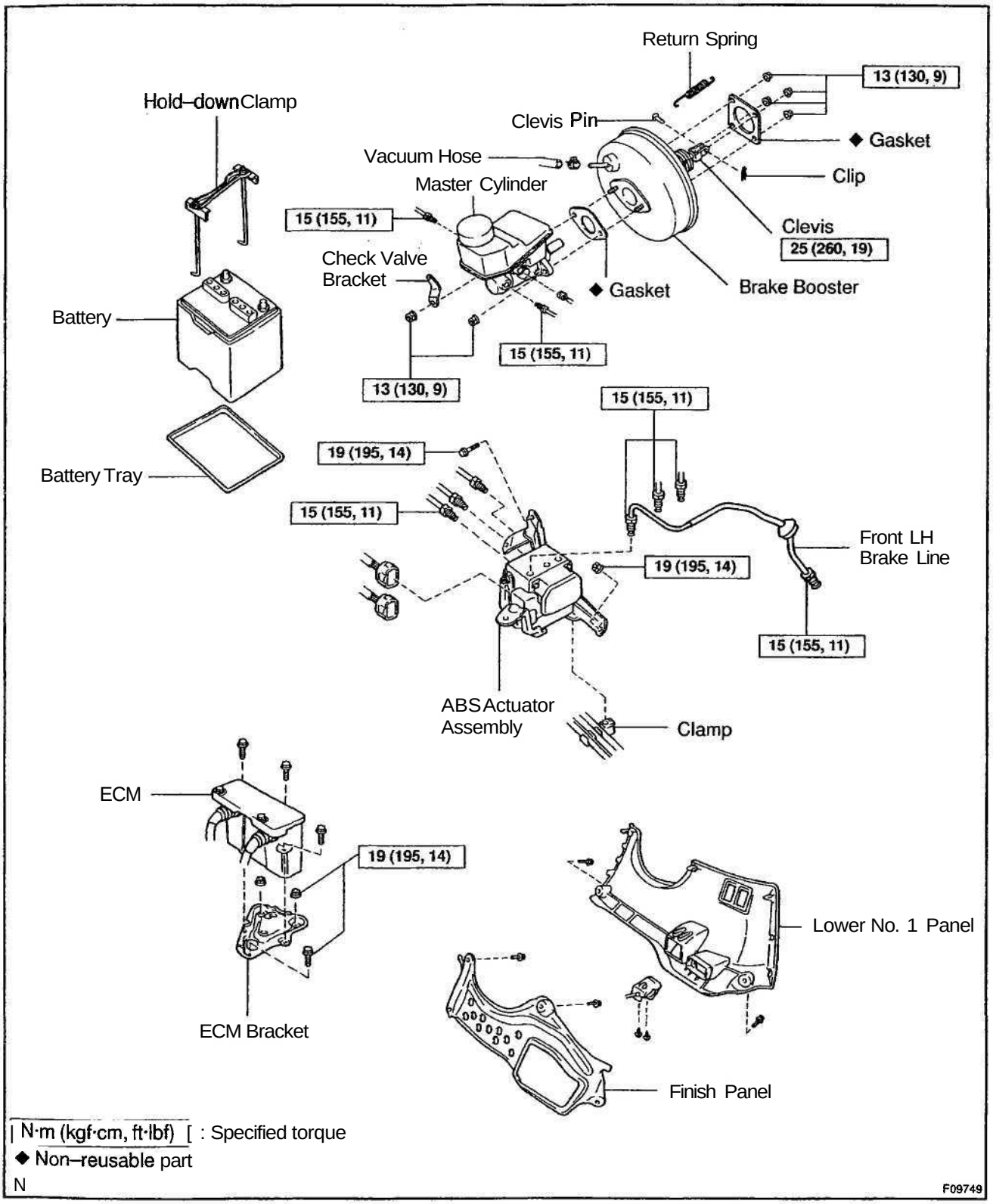

| N·m (kgf·cm, ft·lbf) [: Specified torque

◆ Non-reusable part

N

F09749

BR146-01

REMOVAL

1. **REMOVE FRONT LH WHEEL**
   Torque: 103 N-m (1,050 kgf·cm, 76 ft lbf)
2. **REMOVE MASTER CYLINDER (See page BR–10)**
3. **DISCONNECT VACUUM HOSE FROM BRAKE BOOSTER**
4. **w/ ABS:**
   REMOVE ABS ACTUATOR ASSEMBLY
   (See page BR-53)

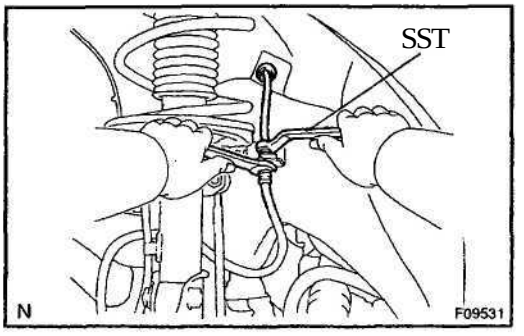

5. **REMOVE FRONT LH BRAKE LINE**

(a) Using SST and spanner, disconnect the brake line from the flexible hose of front LH brake.
SST 09751-36011

(b) Pull out the brake line with the grommet from the body.

6. **REMOVE BRAKE BOOSTER**

(a) Remove the lower No. 1 panel and finish panel.

(b) Remove the return spring, clip and clevis pin.

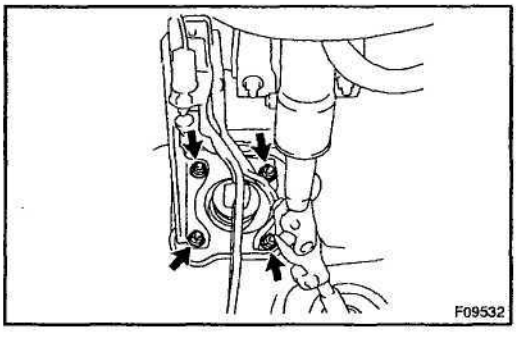

(c) Remove the clevis and 4 nuts.

(d) Pull out the brake booster and gasket.

BR147-01

INSTALLATION

1. INSTALL BRAKE BOOSTER

(a) Install a new gasket and brake booster with 4 nuts.
Torque: 13 N·m (130 kgf cm, 9 ft·lbf)

(b) Install the clevis, and torque the lock nut.
Torque: 25 N·m (260 kgf·cm, 19 ft·lbf)

(c) Install the clevis pin into the clevis and brake pedal, and install the clip to the clevis pin.

(d) Install the pedal return spring.

2. INSTALL FRONT LH BRAKE LINE

(a) Insert the brake line with the grommet into the body, and install the grommet to the body.

(b) Using SST and spanner, connect the brake line to the flexible hose of front LH brake.
SST 09751-36011
Torque: 15 N·m (155 kgf·cm, 11 tt-lbf)

3. w/ ABS:
INSTALL ABS ACTUATOR ASSEMBLY (See page BR–54)

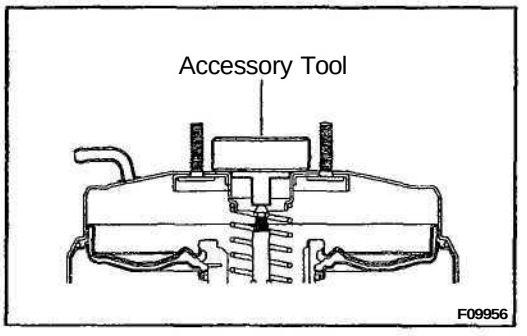

4. **When replacing the brake master cylinder only:**
ADJUST LENGTH OF BRAKE BOOSTER PUSH ROD

(a) Apply chalk to the tip of an accessory tool.

(b) Place the accessory tool to the brake booster.

(c) Measure the clearance between the brake booster push rod and accessory tool.
Clearance: 0 mm (0 in.)

HINT:
Adjust the clearance in following cases:

- If there is a clearance between the accessory tool and the shell of the booster (floating accessory tool), the clearance is small.
- If the chalk does not stick on the tip of the push rod, the clearance is large.

(d) If the clearance is outside of the specified range, depress the brake pedal and adjust the length of the protruding push rod of the brake booster.

NOTICE:
Make an adjustment with the booster having no vacuum. (Depress the brake pedal several times with the engine stopped.)

5. CONNECT VACUUM HOSE TO BRAKE BOOSTER

6. INSTALL MASTER CYLINDER (See page BR–12)

7. FILL BRAKE RESERVOIR WITH BRAKE FLUID AND BLEED BRAKE SYSTEM (See page BR–4)

8. CHECK FOR FLUID LEAKAGE

9. CHECK AND ADJUST BRAKE PEDAL

(a) Check and adjust the brake pedal (See page BR–6).

(b) Install the finish panel and lower No. 1 panel.

10. DO OPERATIONAL CHECK (See page BR–13)

FRONT BRAKE PAD

COMPONENTS

BR0CB-02

2ZZ-GE engine:

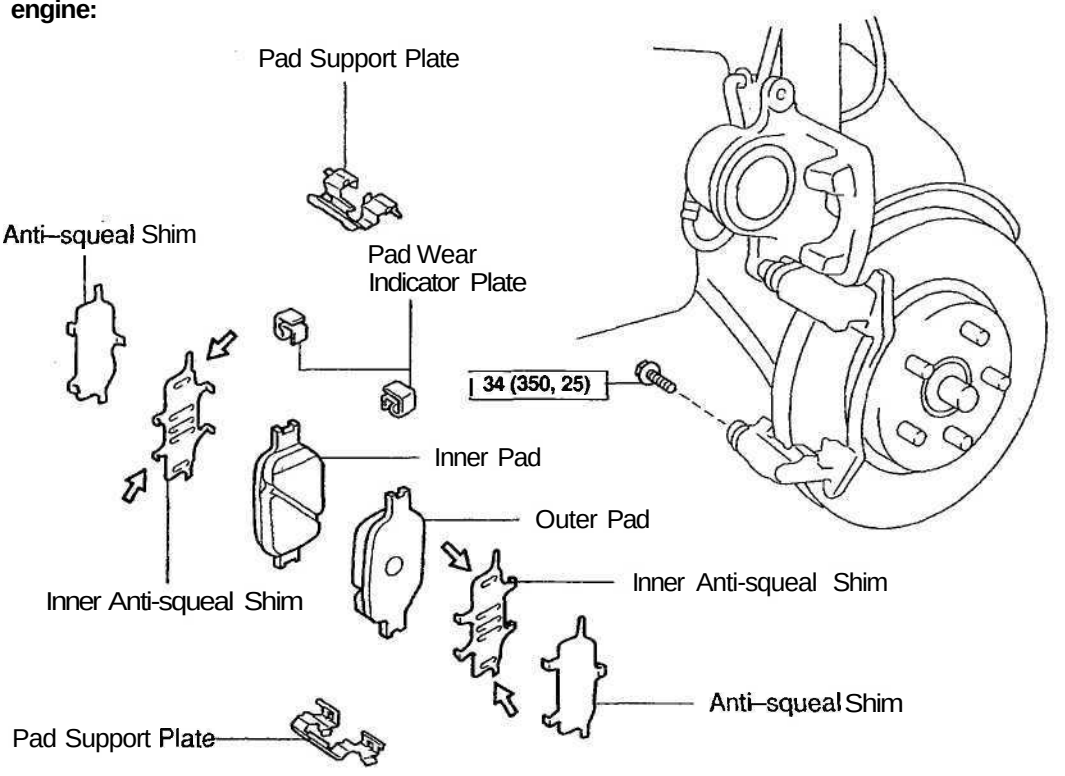

1ZZ-FE engine:

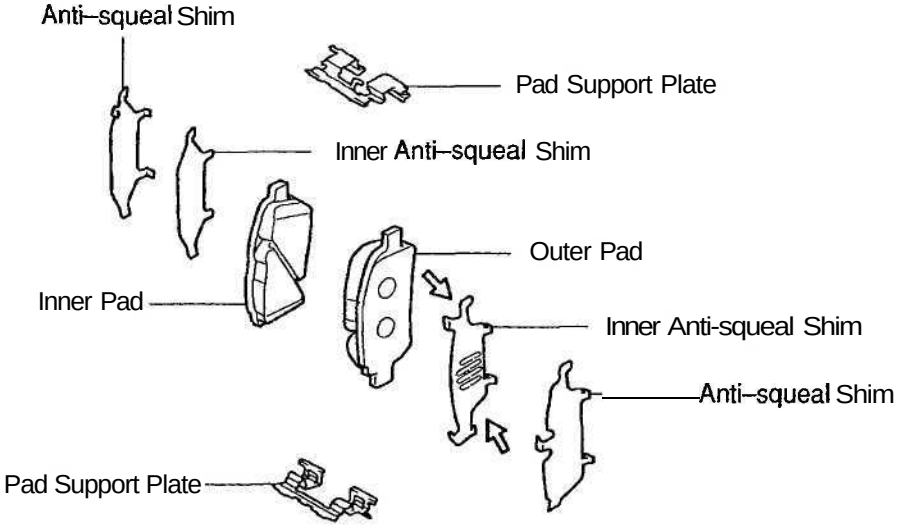

N·m (kgf·cm, ft·lbf) : Specified torque

⇦ Disc brake grease

N

F09534

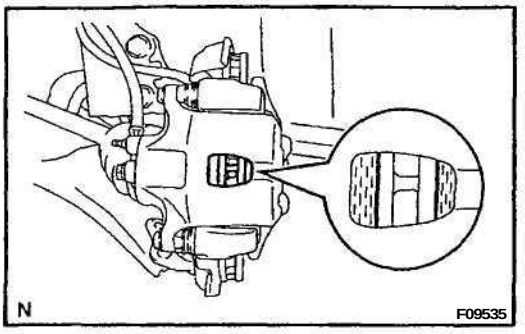

REPLACEMENT

1. REMOVE FRONT WHEEL

2. INSPECT PAD LINING THICKNESS

Check the pad thickness through the caliper inspection hole and replace the pads if they are not within the specification.

Minimum thickness: 1.0 mm (0.039 in.)

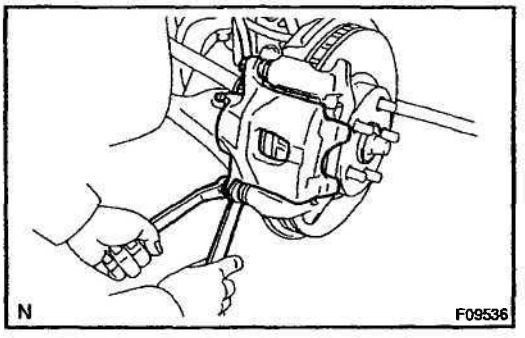

3. LIFT UP CALIPER

(a) Hold the sliding pin and remove the bottom side installation bolt.

HINT:

Do not disconnect the flexible hose from the brake caliper.

(b) Lift up the caliper and suspend it securely.

4. REMOVE 2 PADS WITH 4 ANTI–SQUEAL SHIMS AND PAD WEAR INDICATOR PLATES

5. REMOVE 2 PAD SUPPORT PLATE

NOTICE:

The support plates can be used again provided that they have sufficient rebound, no deformation, cracks or wear, and have had all rust, dirt and foreign particles cleaned off.

6. CHECK DISC THICKNESS AND RUNOUT

(See page BR–24)

7. INSTALL PAD SUPPORT PLATES

Install the 2 pad support plates.

NOTICE:

Do not assemble the upper and lower pad support plates in reverse.

8. INSTALL NEW PADS

NOTICE:

When replacing worn pads, the anti-squeal shims and wear indicator plates must be replaced together with the pads.

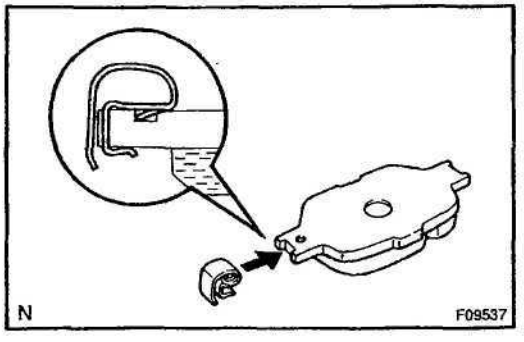

(a) 2ZZ–GE engine:
Install a pad wear indicator plate on the each pad.

(b) 2ZZ–GE engine:
Apply disc brake grease to both sides of each inner anti–squeal shim (See page BR–17).

(c) 1ZZ-FE engine:
Apply disc brake grease to both sides of the inner anti–squeal shim position outside (See page BR–17).

(d) Install the 2 anti-squeal shims on each pad.

(e) Install the pads with the pad wear indicator plate facing upward.

NOTICE:

There should be no oil or grease adhering to the friction surfaces of the pads or the disc.

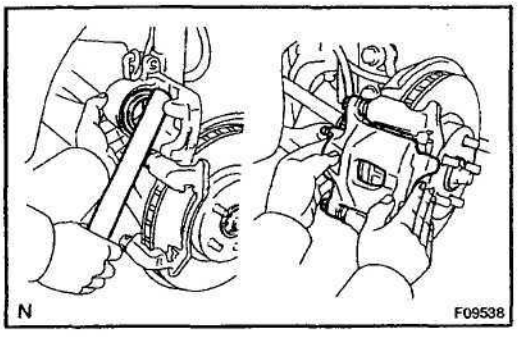

9. INSTALL CALIPER

(a) Draw out a small amount of brake fluid from the reservoir.

(b) Press in the piston with a hammer handle or similar implement.

HINT:

If the piston is difficult to push in, loosen the bleeder plug and push in the piston while letting some brake fluid escape.

(c) Install the caliper.

(d) Hold the sliding pin and torque the installation bolts.

Torque: 34 N·m (350 kgf·cm, 25 ft·lbf)

10. INSTALL FRONT WHEEL

Torque: 103 N·m (1,050 kgf·cm, 76 ft·lbf)

11. DEPRESS BRAKE PEDAL SEVERAL TIMES

12. CHECK THAT FLUID LEVEL IS AT MAX LINE

FRONT BRAKE CALIPER

COMPONENTS

BR149-01

1ZZ-FE engine:

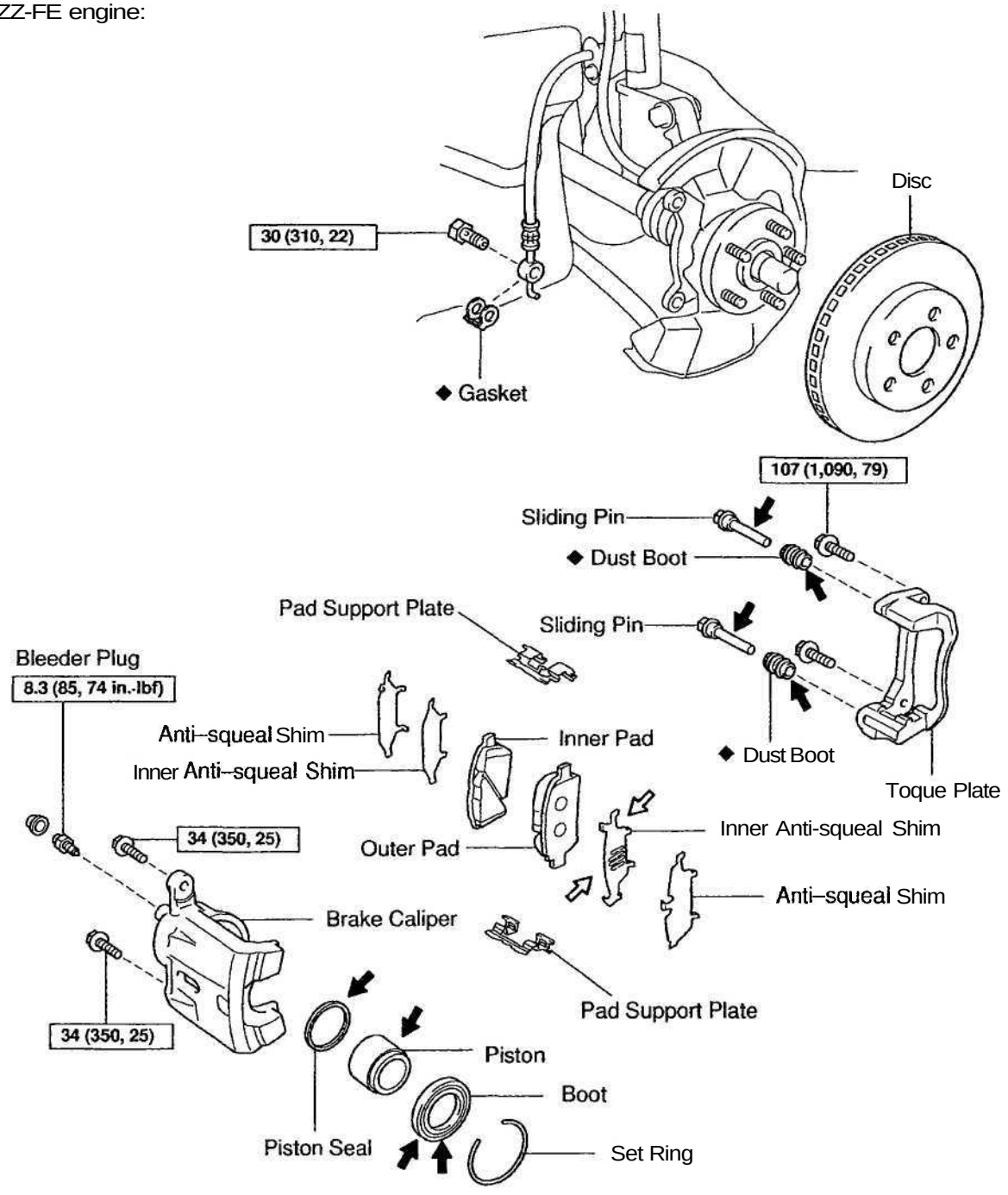

N·m (kgf·cm, ft·lbf) : Specified torque
◆ Non–reusable part
➡ Lithium soap base glycol grease
⇨ Disc brake grease

N

F09701

2ZZ–GE engine:

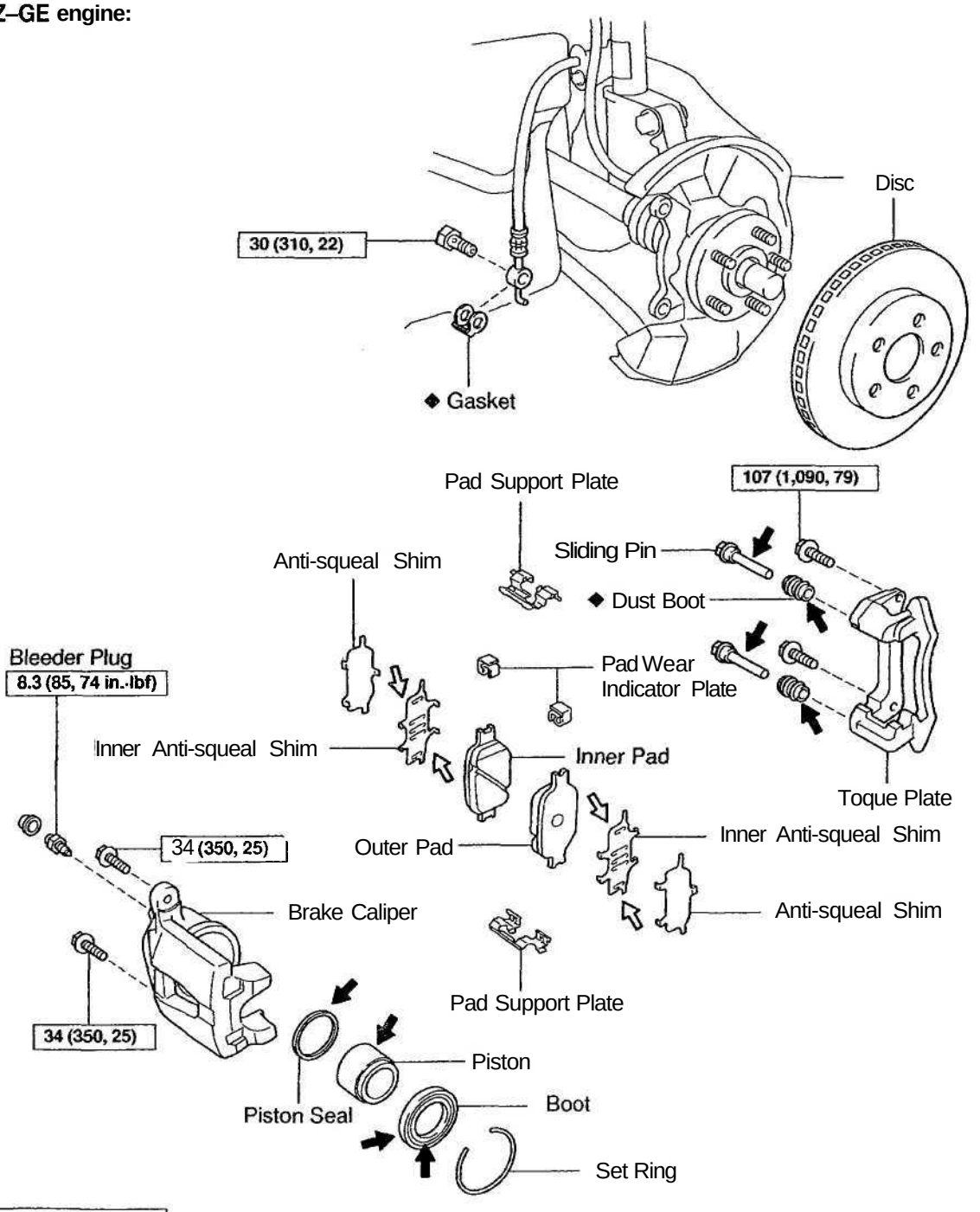

N·m (kgf·cm, ft·lbf) : Specified torque
◆ Non–reusable part
➡ Lithium soap base glycol grease
⇨ Disc brake grease

N

F09702

BR0QE-02

REMOVAL

1. REMOVE FRONT WHEEL

Remove the wheel and temporarily fasten the disc with hub nuts.

Torque: 103 N·m (1,050 kgf·cm, 76 ft·lbf)

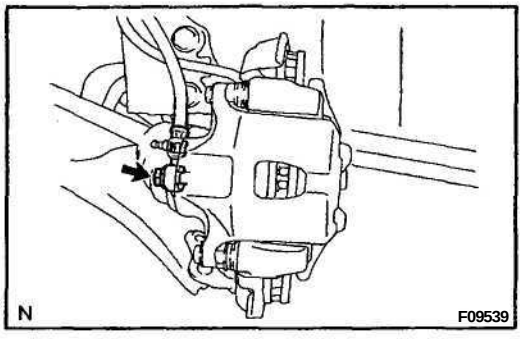

2. DISCONNECT FLEXIBLE HOSE

(a) Remove the union bolt and gasket from the caliper, then disconnect the flexible hose from the caliper.

Torque: 30 N·m (310 kgf·cm, 22 ft·lbf)

HINT:

At the time of installation, install the flexible hose lock securely in the lock hole in the caliper.

(b) Use a container to catch the brake fluid as it drains out.

3. REMOVE CALIPER

(a) Hold the sliding pin and remove the 2 installation bolts.

Torque: 34 N·m (350 kgf·cm, 25 ft·lbf)

(b) Remove the caliper from the torque plate.

4. REMOVE 2 PADS WITH ANTI–SQUEAL SHIMS

5. REMOVE 2 PAD SUPPORT PLATES

BR0CF-02

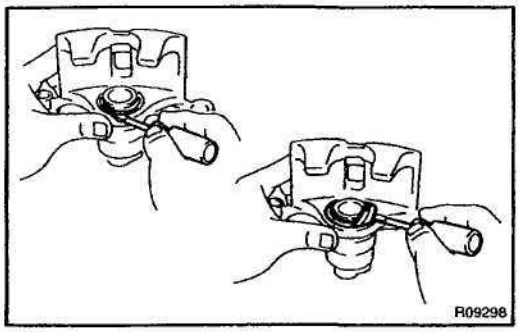

DISASSEMBLY

1. REMOVE SET RING AND CYLINDER BOOT

Using a screwdriver, remove the set ring and cylinder boot from the caliper.

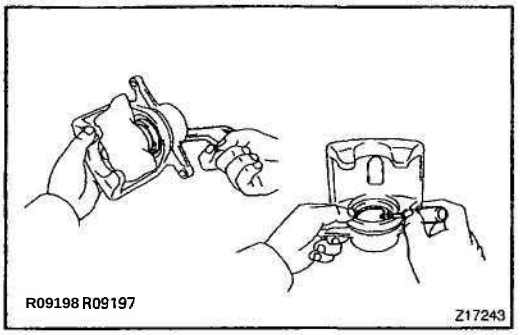

2. REMOVE PISTON

(a) Place a piece of cloth or similar, between the piston and the caliper.

(b) Use compressed air to remove the piston from the cylinder.

CAUTION:

Do not place your fingers in front of the piston when using compressed air.

3. REMOVE PISTON SEAL

Using a screwdriver, remove the piston seal from the cylinder.

4. REMOVE SLIDING PINS AND DUST BOOTS

(a) Remove the 2 sliding pins from the torque plate.

(b) 1ZZ–FE engine:
Remove the 2 dust boots.

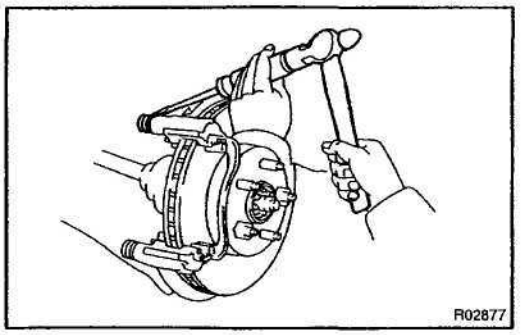

(c) 2ZZ–GE engine:
Using a screwdriver and hammer, tap out the 2 dust boots.

HINT:

At the time of reassembly, use a 19 mm socket wrench and tap in 2 new dust boots into the torque plate.

NOTICE:

At the time of reassembly, check that the metal plate portion of the dust boot fits snugly in the torque plate.

BR0QG-02

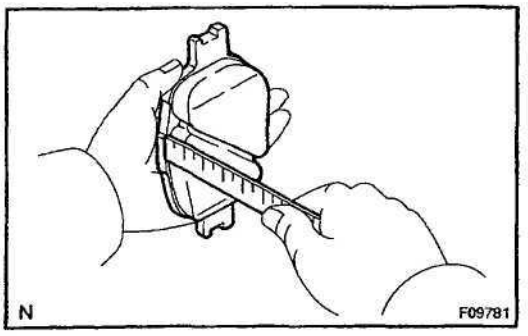

INSPECTION

1. MEASURE PAD LINING THICKNESS

Using a ruler, measure the pad lining thickness.

Standard thickness:
1ZZ-FE engine: 11.0 mm (0.433 in.)
2ZZ–GE engine: 11.5 mm (0.453 in.)
Minimum thickness:
1.0 mm (0.039 in.)

Replace the pad if the pad's thickness is at the minimum thickness or less, or if the pad has severe, uneven wear.

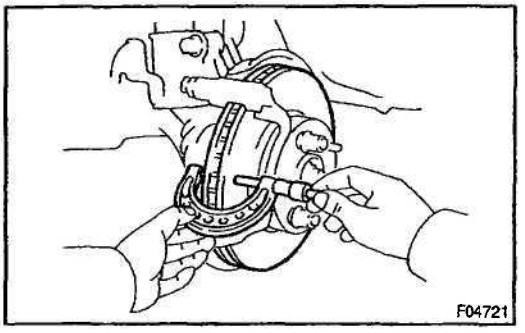

2. MEASURE DISC THICKNESS

Using a micrometer, measure the disc thickness.

Standard thickness: 25.0 mm (0.984 in.)
Minimum thickness: 23.0 mm (0.906 in.)

Replace the disc if the disc's thickness is at the minimum thickness or less. Replace the disc or grind it on a lathe if it is badly scored or worn unevenly.

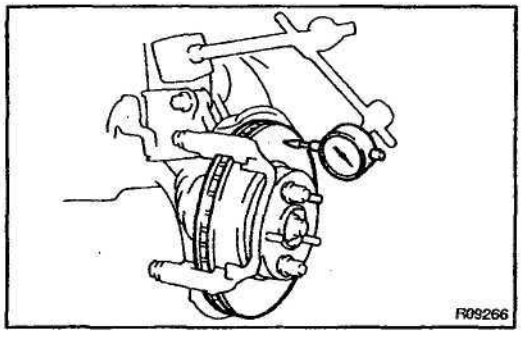

3. MEASURE DISC RUNOUT

Using a dial indicator, measure the disc runout 10 mm (0.39 in.) away from the outer edge of the disc.

Maximum disc runout: 0.05 mm (0.0020 in.)

If the disc's runout is maximum value or greater, check the bearing play in the axial direction and check the axle hub runout (See page SA–12). If the bearing play and axle hub runout are not abnormal, adjust the disc runout or grind it on a "On–car" brake lathe.

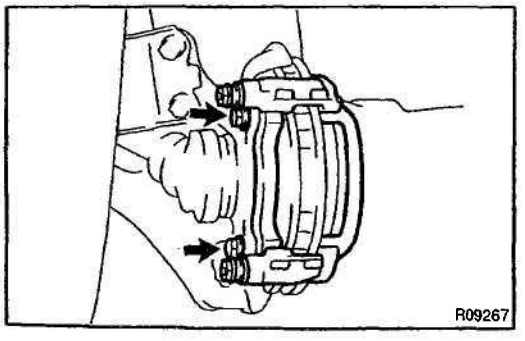

4. IF NECESSARY, ADJUST DISC RUNOUT

(a) Remove the 2 bolts and torque plate from the knuckle.
(b) Remove the hub nuts and the disc. Reinstall the disc in the position turned 1/5 from its original position on the hub. Install and torque the hub nuts.

Torque: 103 N·m (1,050 kgf·cm, 76 ft·lbf)

Remeasure the disc runout. Make a note of the runout and the disc's position on the hub.

(c) Repeat (b) until the disc has been installed on the 3 remaining hub positions.
(d) If the minimum runout recorded in (b) and (c) is less than 0.05 mm (0.0020 in.), install the disc in that position.
(e) If the minimum runout recorded in (b) and (c) is greater than 0.05 mm (0.0020 in.), replace the disc and repeat step 3.
(f) Install the torque plate and torque the mounting bolts.
Torque: 107 N·m (1,090 kgf·cm, 79 ft·lbf)

REASSEMBLY

Reassembly is in the reverse order of disassembly (See page BR–23).

NOTICE:

Apply lithium soap base glycol grease to the parts indicated by arrows (See page BR-20).

BR0CH-02

INSTALLATION

Installation is in the reverse order of removal (See page BR–22).

HINT:

- After installation, fill the brake reservoir with brake fluid and bleed brake system (See page BR–4).
- Check for leaks.

REAR DRUM BRAKE

COMPONENTS

BR14A-01

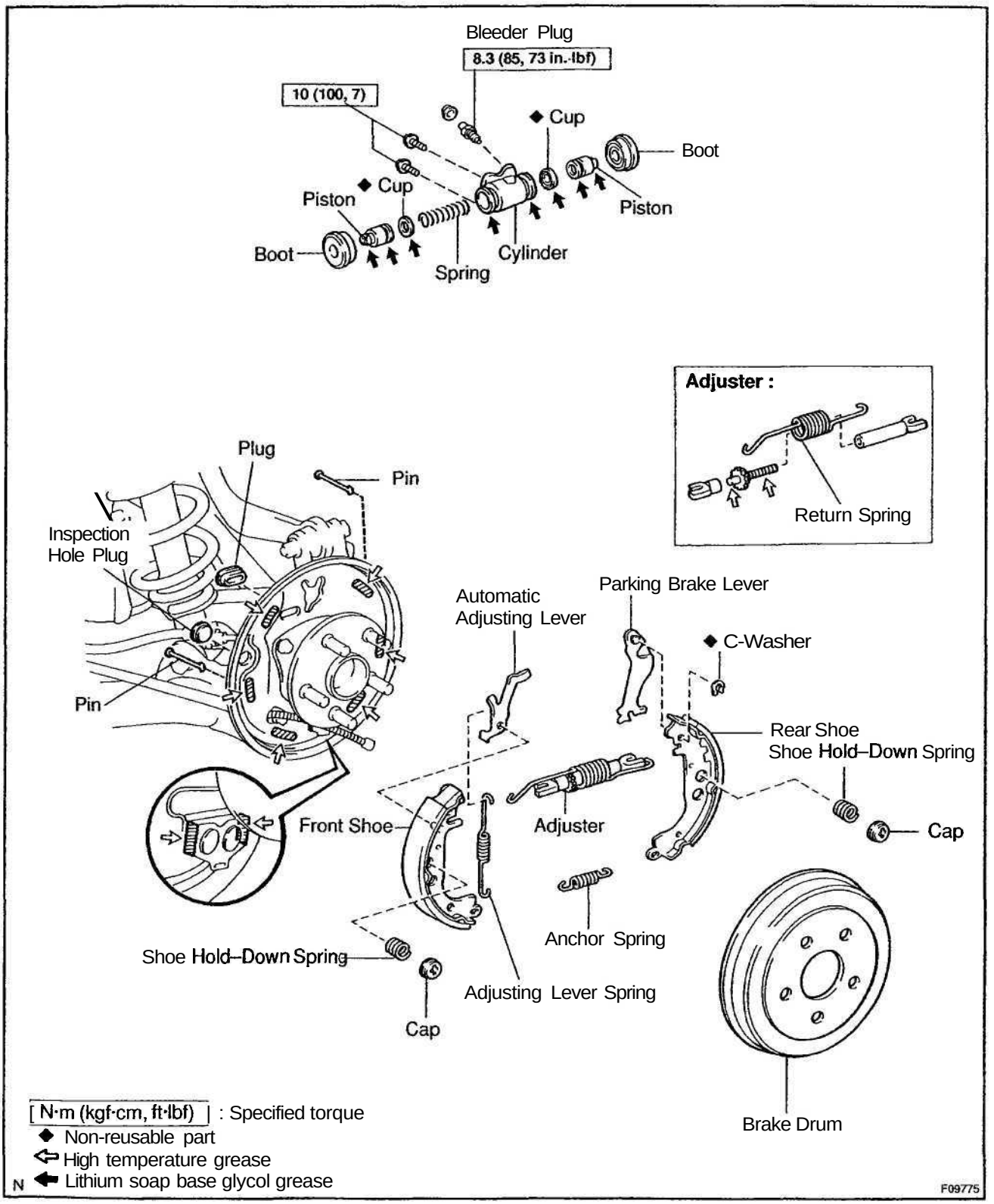

BR14B-01

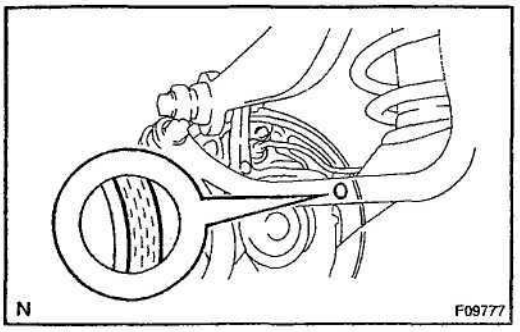

REMOVAL

1. INSPECT SHOE LINING THICKNESS

Remove the inspection hole plug, and check the shoe lining thickness through the hole.

If less than minimum, replace the shoes.

Minimum thickness: 1.0 mm (0.039 in.)

2. REMOVE REAR WHEEL

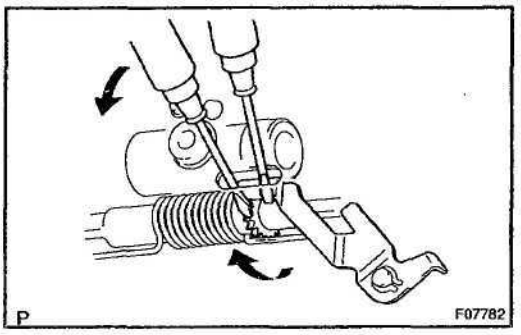

3. REMOVE BRAKE DRUM

(a) Release the parking brake lever, and remove the brake drum.

HINT:

If the brake drum cannot be removed easily, do the following steps.

(b) Remove the plug and insert a screwdriver through the hole in the backing plate.

(c) Using another screwdriver, reduce the brake shoe adjuster by turning the adjusting wheel.

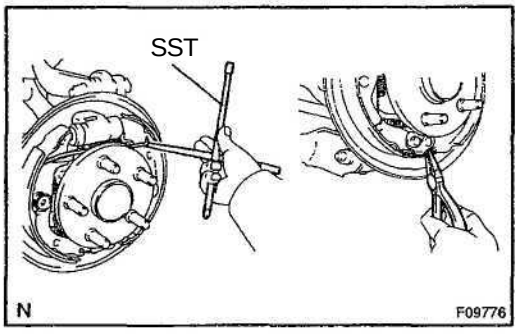

4. REMOVE FRONT SHOE

(a) Using SST, disconnect the adjuster spring from the rear shoe.

SST 09703–30010

(b) Using needle–nose pliers, remove the anchor spring.

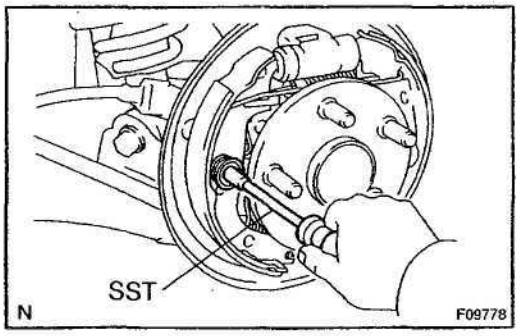

(c) Using SST, remove the cap, shoe hold–down spring and pin from the front shoe.

SST 09718–00010

(d) Remove the adjuster and adjuster spring together with the front shoe.

(e) Remove the adjuster together with the adjuster spring from the front shoe.

(f) Using needle-nose pliers, remove the adjusting lever spring.

(g) Remove the automatic adjusting lever from the front shoe.

5. REMOVE REAR SHOE

(a) Using SST, remove the cap, shoe hole–down spring and pin.

SST 09718–00010

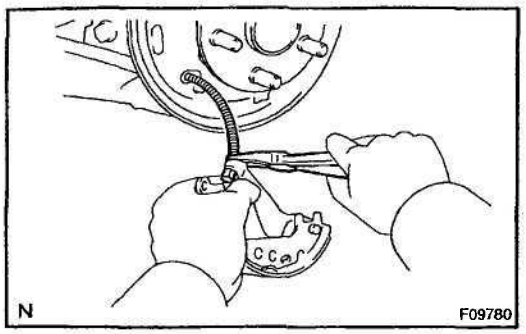

(b) Using needle–nose pliers, disconnect the parking brake cable from the parking brake lever, and remove the rear shoe.

6. **REMOVE PARKING BRAKE LEVER**

(a) Remove the C–washer.

(b) Remove the parking lever from the rear shoe.

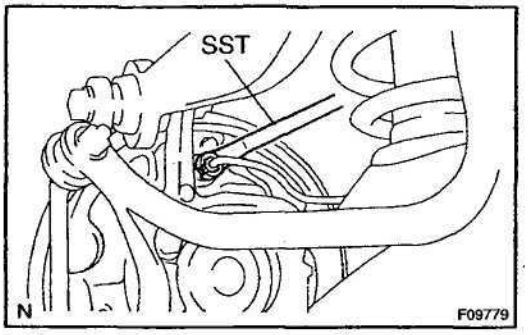

7. **REMOVE WHEEL CYLINDER**

(a) Using SST, disconnect the brake line. Use container to catch the brake fluid.

SST 09751-36011

Torque:15 N m (155 kgf·cm, 11 ft·lbf)

(b) Remove the 2 bolts and the wheel cylinder.

Torque:10 N·m (100 kgf·cm, 7 ft·lbf)

8. **DISASSEMBLE WHEEL CYLINDER**

(a) Remove the 2 boots from the wheel cylinder.

(b) Remove the 2 pistons from the wheel cylinder.

(c) Remove the spring from the wheel cylinder.

(d) Remove the 2 piston cups from each piston.

INSPECTION

1. INSPECT DISASSEMBLED PARTS

Inspect the disassembled parts for wear, rust or damage.

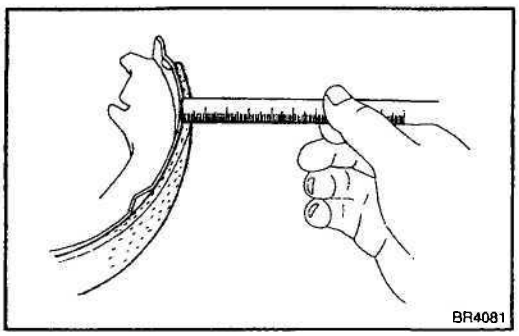

2. MEASURE BRAKE SHOE LINING THICKNESS

Using a ruler, measure the shoe lining thickness.

Standard thickness: 4.0 mm (0.157 in.)

Minimum thickness: 1.0 mm (0.039 in.)

If the thickness is less than the minimum or shoe lining shows signs of uneven wear, replace the brake shoes.

HINT:

If a brake shoes needs replacing, the brake shoes must be replaced as a set

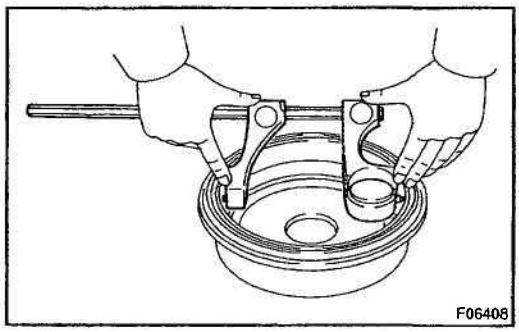

3. MEASURE BRAKE DRUM INSIDE DIAMETER

Using a brake drum gauge or equivalent, measure the inside diameter of the drum.

Standard inside diameter: 200.0 mm (7.874 in.)

Maximum inside diameter: 201.0 mm (7.913 in.)

If the drum is scored or worn, the brake drum may be lathed to the maximum inside diameter.

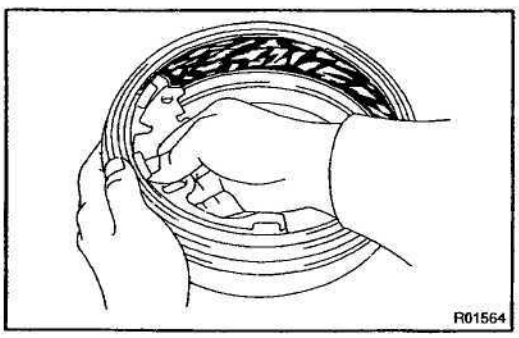

4. INSPECT REAR BRAKE LINING AND DRUM FOR PROPER CONTACT

If the contact between the brake lining and drum is improper, repair the lining with a brake shoe grinder, or replace the brake shoe assembly.

BR11H-02

INSTALLATION

Installation is in the reverse order of removal (See page BR–29).

NOTICE:

Apply lithium soap base glycol grease and high temperature grease to the parts indicated by the arrows (See page BR-28).

1. CHECK OPERATION OF AUTOMATIC ADJUSTING MECHANISM

(a) Move the parking brake lever of the rear shoe back and forth. Check that the adjuster turns.

If the adjuster does not turn, check for incorrect installation of the rear brake.

(b) Adjust the adjuster length to the as short as possible.

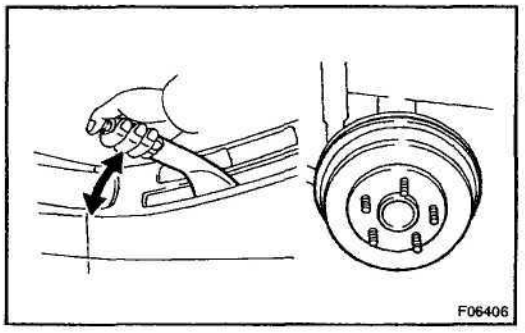

(c) Install the brake drum.

(d) Pull the parking brake lever all the way up until a clicking sound can no longer be heard.

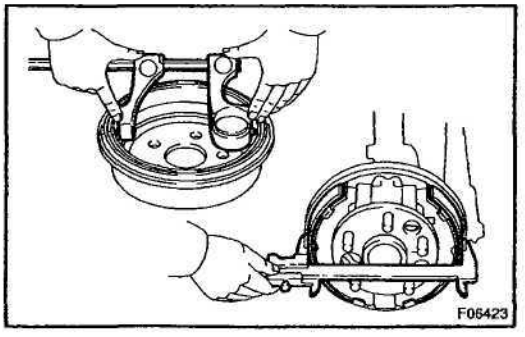

2. CHECK CLEARANCE BETWEEN BRAKE SHOES AND DRUM

(a) Remove the brake drum.

(b) Measure the brake drum inside diameter and diameter of the brake shoes. Check that the difference between the diameters is the correct shoe clearance.

Shoe clearance: 0.6 mm (0.024 in.)

If incorrect, check the parking brake system.

(c) Install the brake drum.

3. FILL BRAKE RESERVOIR WITH BRAKE FLUID

4. BLEED BRAKE SYSTEM (See page BR–4)

5. CHECK FOR LEAKS

6. INSTALL REAR WHEEL

Torque: 103 N·m (1,050 kgf cm, 76 tt-lbf)

REAR BRAKE PAD

COMPONENTS

BR0GJ-03

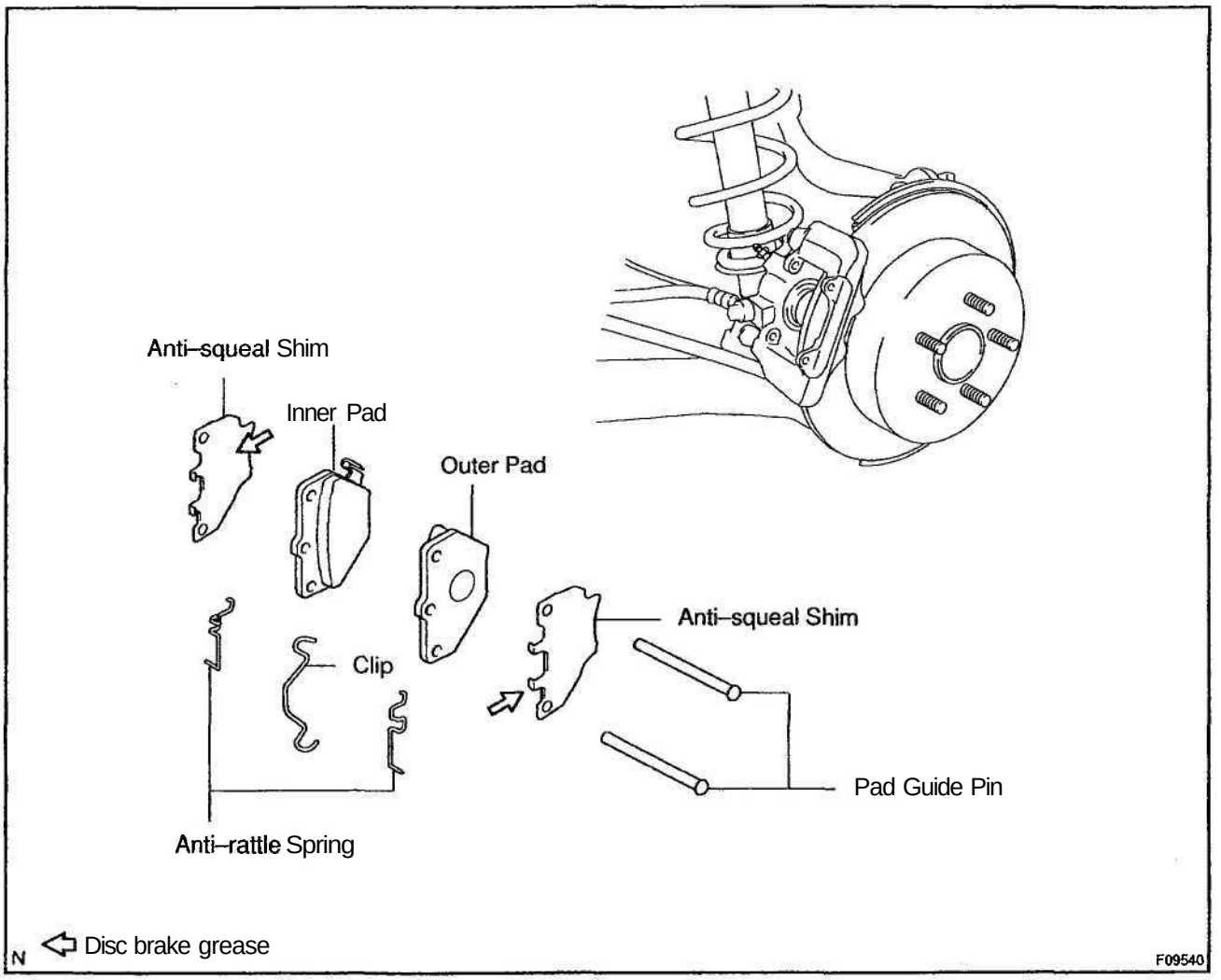

BR14C-01

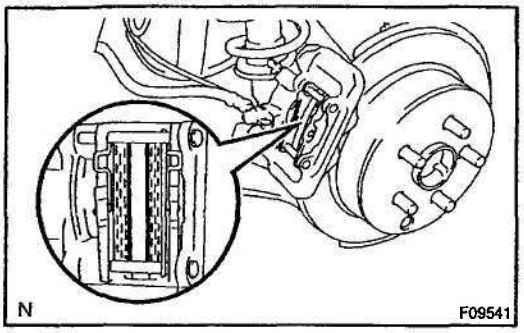

REPLACEMENT

1. REMOVE REAR WHEEL

2. INSPECT PAD LINING THICKNESS

Check the pad thickness.

Minimum thickness: 1.0 mm (0.039 in.)

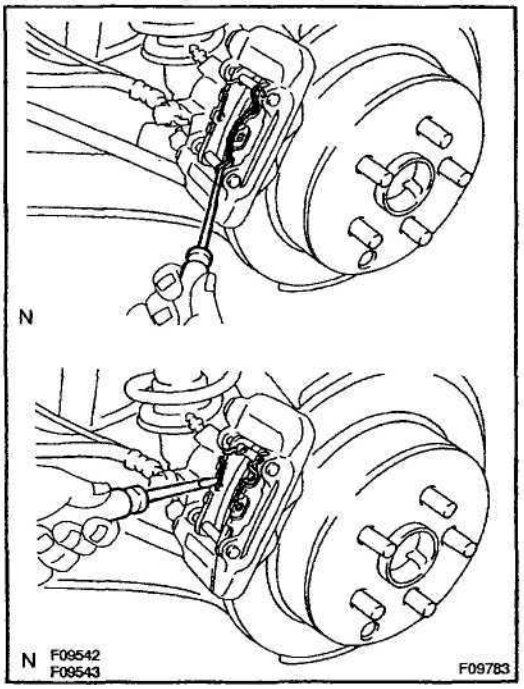

3. REMOVE CLIP, 2 ANTI–RATTLE SPRINGS AND 2 PAD GUIDE PINS

(a) Using a screwdriver, remove the clip and 2 anti–rattle springs.

NOTICE:

- **Do not deform the clip and anti-rattle spring.**
- **The clip and anti–rattle spring can be used again provided that they have sufficient rebound, no deformation, cracks or wear, and have had all rust, dirt and foreign particles cleaned off.**

(b) Remove the 2 pad guide pins.

4. REMOVE PADS AND ANTI–SQUEAL SHIMS

(a) Remove the 2 pads.

(b) Remove the anti–squeal shim from each pad.

5. CHECK DISC THICKNESS AND RUNOUT
(See page BR–39)

6. INSTALL NEW PADS

NOTICE:

When replacing worn pads, the anti-squeal shims must be replaced together with the pads.

(a) Apply disc brake grease to inside of anti–squeal shims (See page BR–33).

(b) Install the anti–squeal shim on each pad.

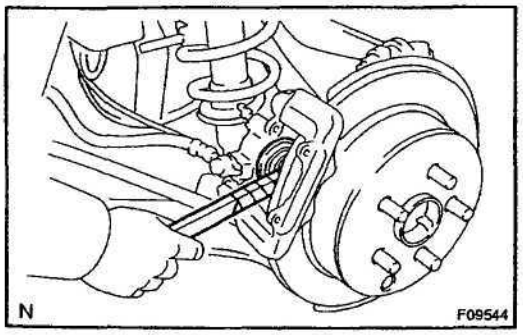

(c) Draw out a small amount of brake fluid from the reservoir.

(d) Press in the piston with a hammer handle or equivalent.

HINT:

- Tape the hammer handle before use.
- If the piston is difficult to push in, loosen the bleeder plug and push in the piston while letting some brake fluid escape.

(e) Install the inner pad with the pad wear indicator plats facing upward, and install the outer pad.

NOTICE:
There should be no oil or grease adhering to the friction surfaces of the pads and the disc.

7. INSTALL 2 PAD GUIDE PINS, 2 ANTI-RATTLE SPRINGS AND CLIP

(a) Install the 2 anti–rattle springs on the each pad.

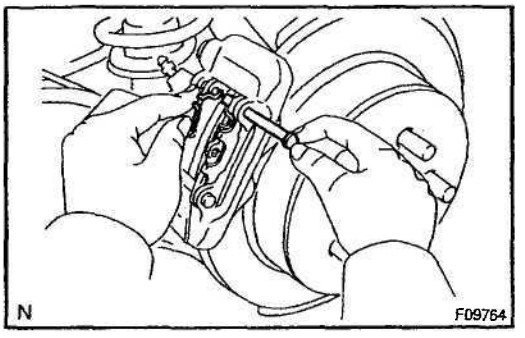

(b) While pressing the anti–rattle spring, and install the pad guide pin.

(c) Install the clip to the pad guide pin.

8. INSTALL REAR WHEEL
Torque: 103 N·m (1,050 kgf·cm, 76 tt-lbf)

9. DEPRESS BRAKE PEDAL SEVERAL TIMES

10. CHECK THAT FLUID LEVEL IS AT MAX LINE

REAR BRAKE CALIPER

COMPONENTS

BR0OL–03

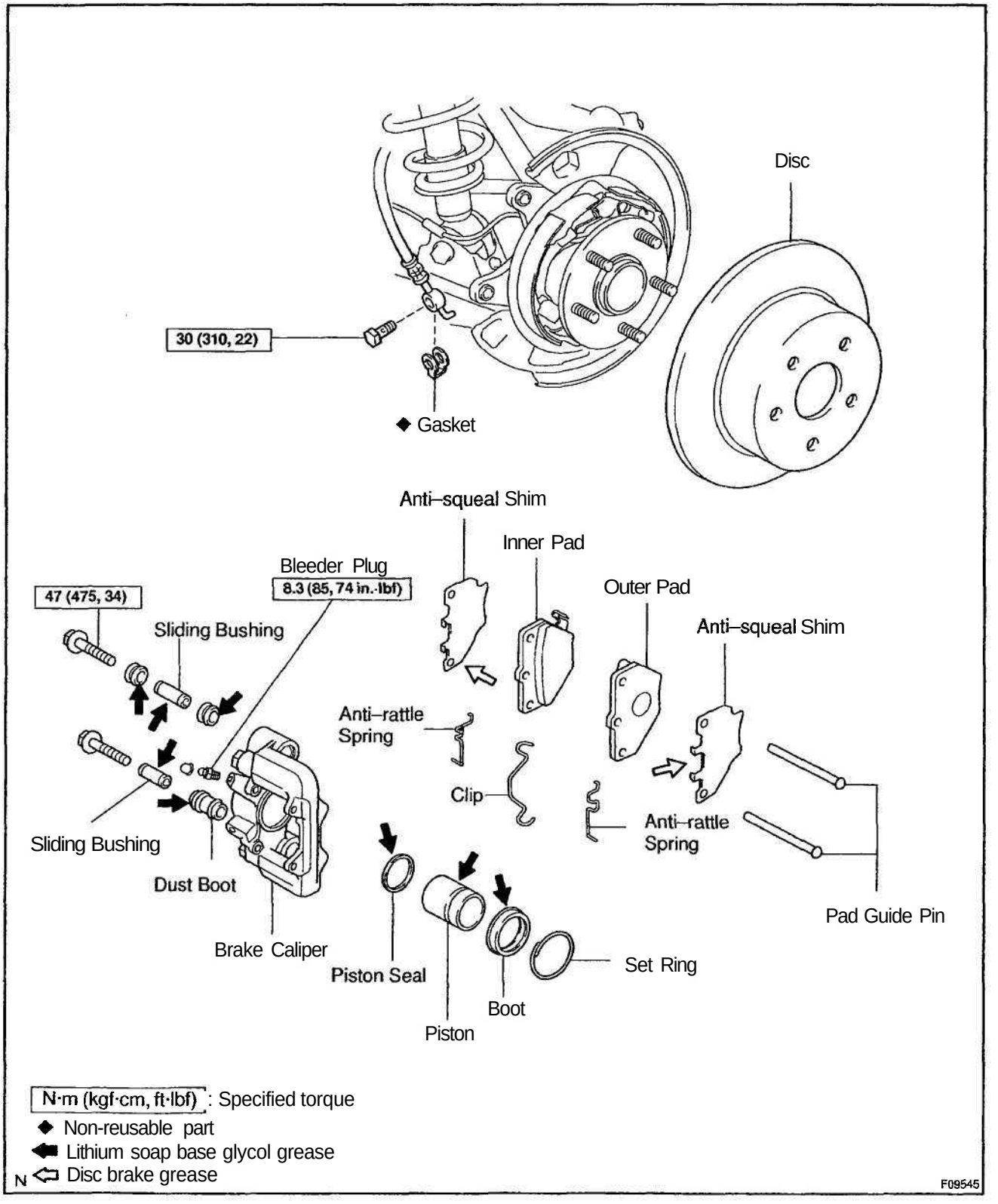

BR14D-01

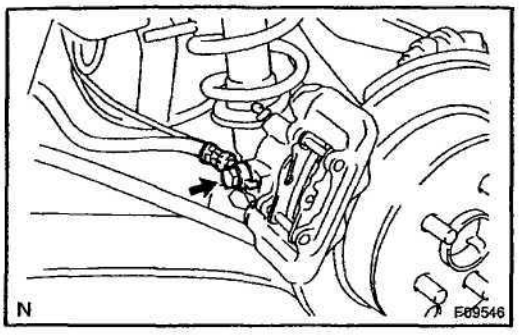

REMOVAL

1. REMOVE REAR WHEEL

Torque: 103 N·m (1,050 kgf·cm, 76 ft·lbf)

2. DISCONNECT FLEXIBLE HOSE

(a) Remove the union bolt and gasket from the caliper, then disconnect the flexible hose from the caliper.

Torque: 30 N·m (310 kgf·cm, 22 ft·lbf)

HINT:

At the time of installation, insert the flexible hose lock securely in the lock hole in the caliper.

(b) Use a container to catch the brake fluid as it drains out.

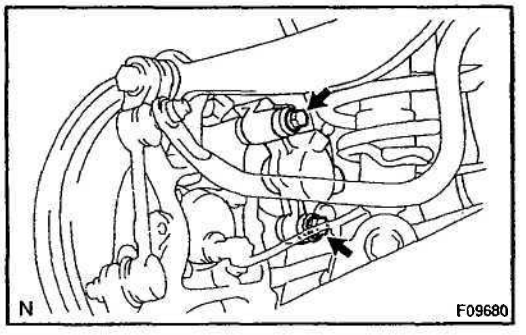

3. REMOVE CALIPER

(a) Remove the 2 installation bolts and caliper.

Torque: 47 N·m (475 kgf·cm, 34 ft·lbf)

(b) Remove the caliper from the torque plate.

4. REMOVE 2 PADS WITH ANTI–SQUEAL SHIMS

BR14E-01

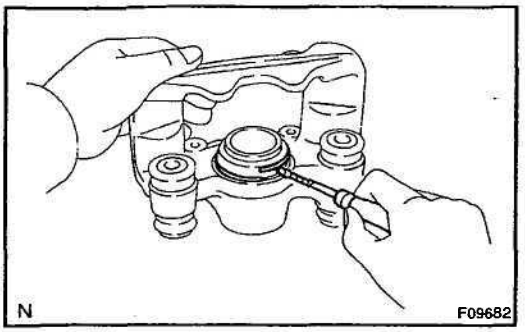

DISASSEMBLY

1. REMOVE SET RING AND CYLINDER BOOT

Using a screwdriver, remove the set ring and cylinder boot.

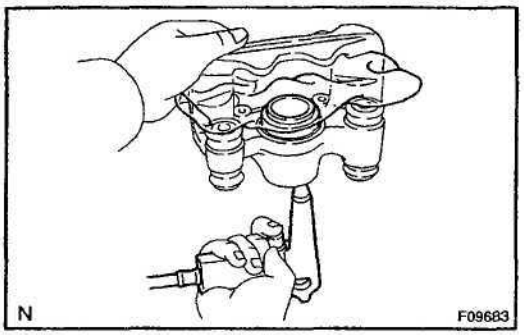

2. REMOVE PISTON

(a) Put a piece of cloth or an equivalent between the piston and caliper.

(b) Use compressed air to remove the piston from the cylinder.

CAUTION:

Do not place your fingers in front of the piston when using compressed air.

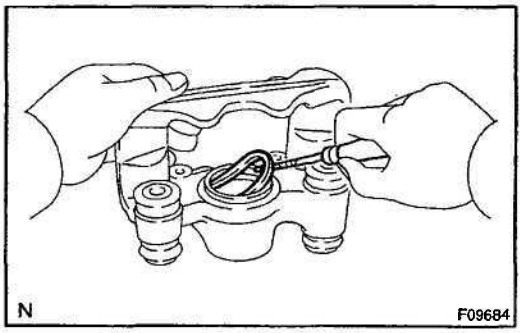

3. REMOVE PISTON SEAL FROM CYLINDER

Using a screwdriver, remove the piston seal.

4. REMOVE 2 SLIDING BUSHINGS AND 3 DUST BOOTS

BR14F-01

INSPECTION

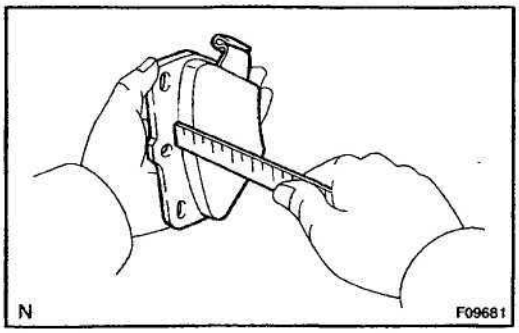

1. MEASURE PAD LINING THICKNESS

Using a ruler, measure the pad lining thickness.

Standard thickness: 10.0 mm (0.394 in.)

Minimum thickness: 1.0 mm (0.039 in.)

Replace the pad if the pad's thickness is at the minimum thickness or less, or if the pad has severe, uneven wear.

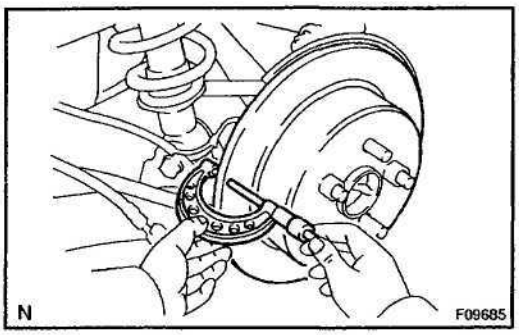

2. MEASURE DISC THICKNESS

Using a micrometer, measure the disc thickness.

Standard thickness: 9.0 mm (0.354 in.)

Minimum thickness: 7.5 mm (0.295 in.)

Replace the disc if the disc's thickness is at the minimum thickness or less. Replace the disc or grind it on a lathe if it is scored or worn unevenly.

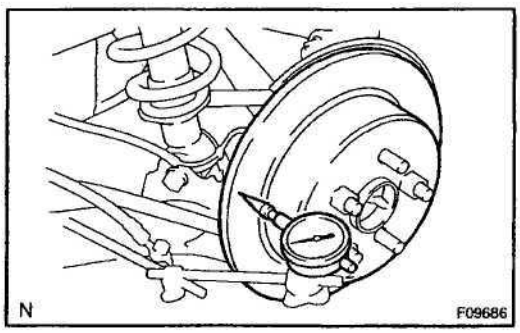

3. MEASURE DISC RUNOUT

Using a dial indicator, measure disc runout at a position 10 mm (0.39 in.) from the outside edge.

Maximum disc runout: 0.15 mm (0.0059 in.)

If the disc's runout is at the maximum value or greater, check the bearing play is in the axial direction and check the axle hub runout (See page SA-55). If the bearing play and axle hub runout are not abnormal, adjust the disc runout or grind it on a "On–car" brake lathe.

4. IF NECESSARY, ADJUST DISC RUNOUT

(a) Remove the hub nuts and the disc. Reinstall the disc in the position turned 1/5 from its original position on the hub. Install and torque the hub nuts.

Torque: 103 N·m (1,050 kgf·cm, 76 tt-lbf)

Remeasure the disc runout. Make a note of the runout and the disc's position on the hub.

(b) Repeat (a) until the disc has been installed on the 3 remaining hub positions.

(c) If the minimum runout recorded in (a) and (b) is less than 0.15 mm (0.0059 in.), install the disc in that position.

(d) If the minimum runout recorded in (a) and (b) is greater than 0.15 mm (0.0059 in.), replace the disc and repeat step 3.

REASSEMBLY

Reassembly is in the reverse order of disassembly (See page BR–38).

NOTICE:

Apply lithium soap base glycol grease to the parts indicated by the arrows (See page BR–36).

BR0B7-03

INSTALLATION

Installation is in the reverse order of removal (See page BR-37).

HINT:

- After installation, fill the brake reservoir with brake fluid and bleed the brake system (See page BR–4).
- Check for leaks.

PARKING BRAKE

BR0QR-03

COMPONENTS

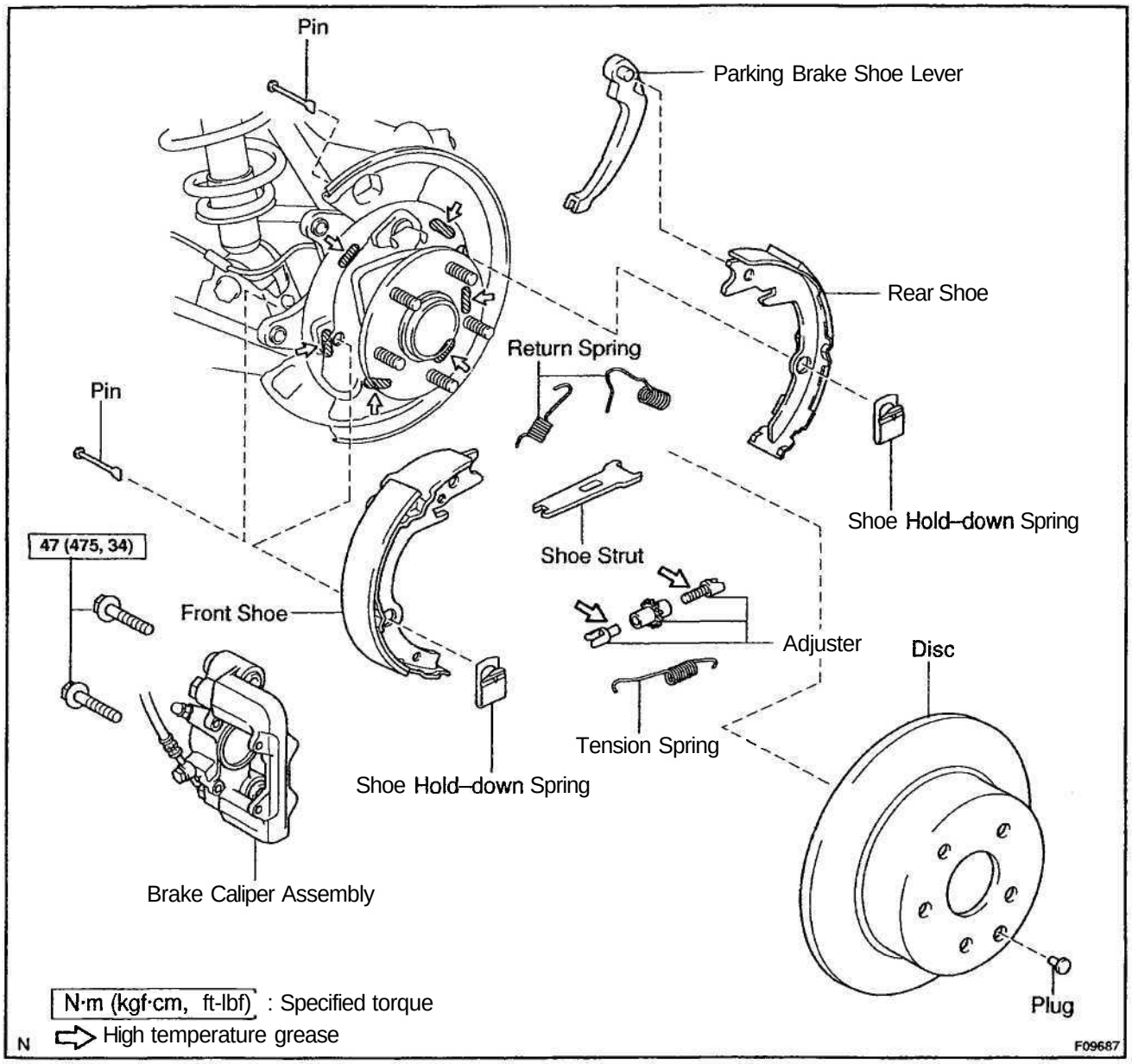

BR0QS-03

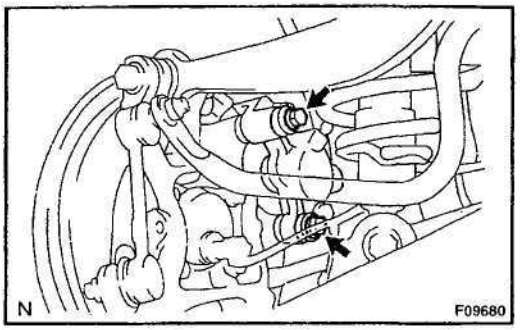

DISASSEMBLY

1. **REMOVE REAR WHEEL**
   Torque: 103 N·m (1,050 kgf·cm, 76 ft lbf)
2. **REMOVE REAR DISC BRAKE ASSEMBLY**

(a) Remove the 2 installation bolts and rear brake caliper.
Torque: 47 N·m (475 kgf·cm, 34 ft·lbf)

HINT:

Do not disconnect the flexible hose from the brake caliper.

(b) Suspend the disc brake securely. Ensure that the hose is not stretched.

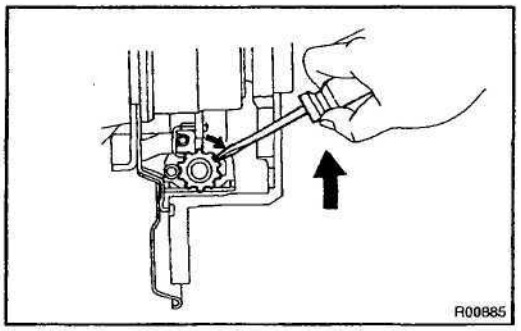

3. REMOVE DISC

Release the parking brake lever, and remove the disc.

HINT:

If the disc cannot be removed easily, turn the shoe adjuster until the wheel turns freely.

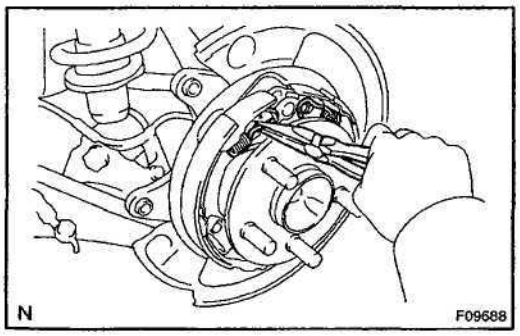

4. REMOVE SHOE RETURN SPRINGS AND TENSION SPRING

Using needle–nose pliers, remove the 2 shoe return springs and tension spring.

5. REMOVE SHOE STRUT

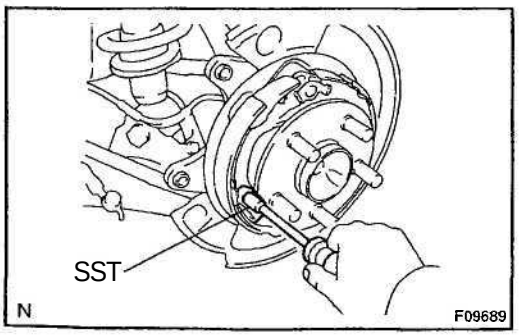

6. REMOVE FRONT SHOE AND ADJUSTER

(a) Using SST, remove the shoe hold–down spring and pin from the front shoe.
SST 09718–00010

(b) Remove the front shoe and adjuster.

7. REMOVE REAR SHOE

(a) Using SST, remove the shoe hold–down spring and pin from the rear shoe.
SST 09718–00010

(b) Disconnect the rear shoe from the parking brake shoe lever, and remove rear shoe.

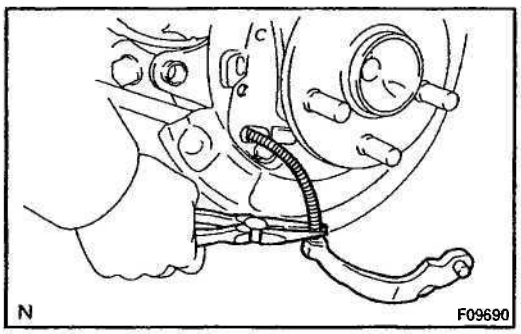

8. REMOVE PARKING BRAKE SHOE LEVER

Using needle–nose pliers, disconnect the parking brake cable from the parking brake shoe lever.

BR14G-01

INSPECTION

1. INSPECT DISASSEMBLED PARTS

Inspect the disassembled parts for wear, rust or damage.

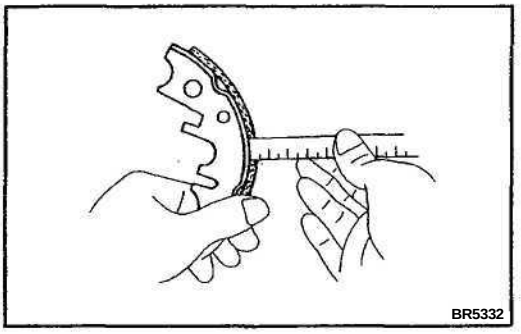

2. MEASURE BRAKE SHOE LINING THICKNESS

Using a ruler, measure the thickness of the shoe lining.

Standard thickness: 2.0 mm (0.079 in.)

Minimum thickness: 1.0 mm (0.039 in.)

If the lining thickness is at the minimum thickness or less, or if there is severe, uneven wear, replace the brake shoe.

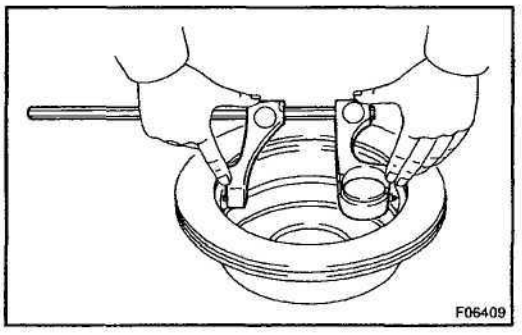

3. MEASURE DISC INSIDE DIAMETER

Using a brake drum gauge or equivalent, measure the inside diameter of the disc.

Standard inside diameter: 173.0 mm (6.811 in.)

Maximum inside diameter: 174.0 mm (6.850 in.)

Replace the disc if the inside diameter is at the maximum value or more. Replace the disc or grind it with a lathe if the disc is scored or is worn unevenly.

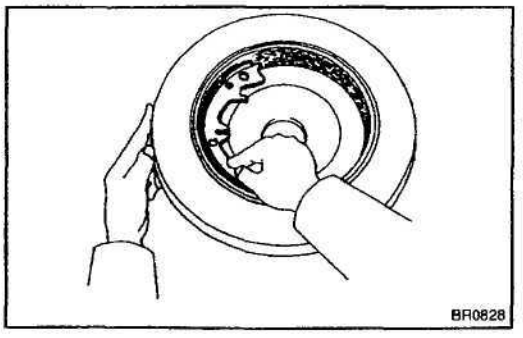

4. INSPECT PARKING BRAKE LINING AND DISC FOR PROPER CONTACT

Apply chalk to the inside surface of the disc, then grind down the brake shoe lining to fit. If the contact between the disc and the brake shoe lining is improper, repair it using a brake shoe grinder or replace the brake shoe assembly.

BR0QU-03

REASSEMBLY

Reassembly is in the reverse order of disassembly (See page BR–43).

NOTICE:

Apply high temperature grease to the parts indicated by the arrows (See page BR–42).

1. ADJUST PARKING BRAKE SHOE CLEARANCE

(a) Temporarily install the hub nuts.

(b) Remove the hole plug.

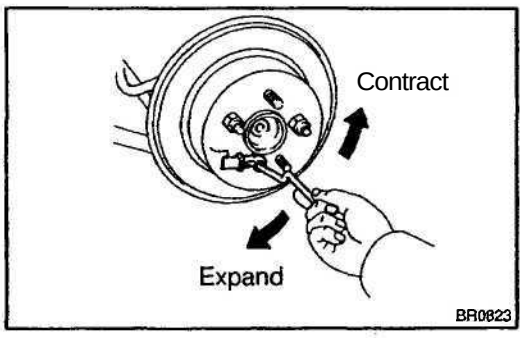

(c) Turn the adjuster and expand the shoes until the disc locks.

(d) Return the adjuster 8 notches.

(e) Install the hole plug.

2. SETTLING PARKING BRAKE SHOES AND DISC

(a) Drive the vehicle at about 50 km/h (31 mph) on a safe, level and dry road.

(b) With the parking brake release button pushed in, pull on the lever with 98 N (10 kgf, 19.8 lbf) of force.

(c) Drive the vehicle for about 400 meters (0.25 mile) in this condition.

(d) Repeat this procedure 2 or 3 times.

3. CHECK AND ADJUST PARKING BRAKE LEVER TRAVEL (See page BR–8)

PROPORTIONING VALVE (P VALVE)

ON–VEHICLE INSPECTION

BR0CV-02

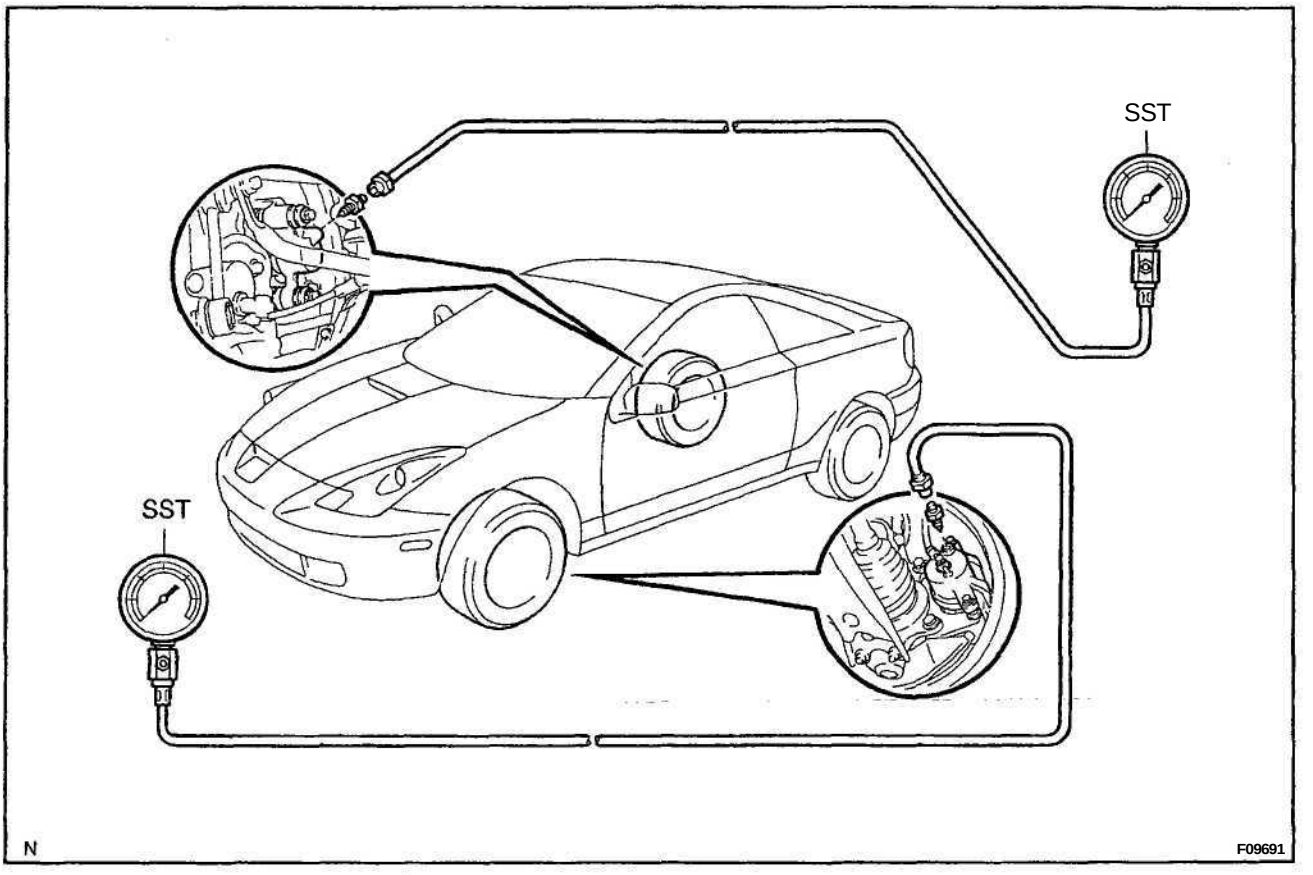

1. **INSTALL LSPV GAUGE (SST) AND BLEED AIR**
   SST 09709–29018
2. **BLEED AIR FROM FLUID PRESSURE GAUGE**
3. **RAISE MASTER CYLINDER PRESSURE AND CHECK REAR WHEEL CYLINDER OR REAR BRAKE CALIPER PRESSURE**

1ZZ–FE engine:

Master cylinder fluid pressure	Rear wheel cylinder fluid pressure
2.94 kPa (30 kgf/cm², 427 psi)	2.94 kPa (30 kgf/cm², 427 psi)
7.85 kPa (80 kgf/cm², 1,138 psi)	4.75 kPa (48.5 kgf/cm², 689 psi)

2ZZ-GE engine:

Master cylinder fluid pressure	Rear brake caliper fluid pressure
1.96 kPa (20 kgf/cm², 284 psi)	1.96 kPa (20 kgf/cm², 284 psi)
7.85 kPa (80 kgf/cm², 1,138 psi)	5.61 kPa (57.2 kgf/cm², 813 psi)

When inspecting the fluid pressure, inspect the left font and right rear together, and the right front and left rear together.

If the rear fluid pressure is incorrect, replace the P valve assembly.

4. **BLEED BRAKE SYSTEM (See page BR–4)**
5. **CHECK FOR LEAKS**

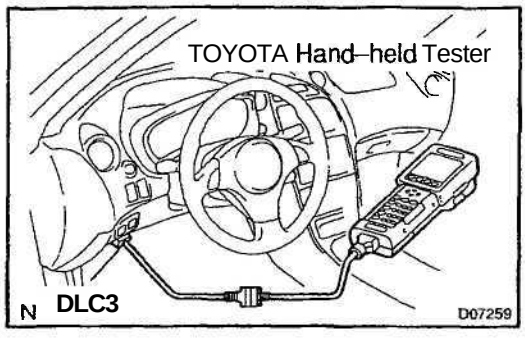

ABS ACTUATOR

ON-VEHICLE INSPECTION

BR0GW-02

1. IN CASE OF USING TOYOTA HAND-HELD TESTER:

(a) Connect the TOYOTA hand-held tester to the DLC3.

(b) Start the engine and run it at idle.

(c) Select the ACTIVE TEST mode on the TOYOTA hand-held tester.

HINT:

Please refer to the TOYOTA hand-held tester operator's manual for further details.

2. INSPECT ACTUATOR MOTOR OPERATION

(a) With the motor relay ON, check the actuator motor operation noise.

(b) Turn the motor relay OFF.

(c) Depress the brake pedal and hold it for about 15 seconds. Check that the brake pedal cannot be depressed.

(d) With the motor relay ON, check that the pedal does not pulsate.

NOTICE:

Do not keep motor relay ON for more than 5 seconds continuously. When operating it continuously, set the interval of more than 20 seconds.

(e) Turn the motor relay OFF and release the brake pedal.

3. INSPECT RIGHT FRONT WHEEL OPERATION

NOTICE:

Never turn ON the solenoid which is not described below.

(a) With the brake pedal depressed, perform the following operations.

(b) Turn the SFRH and SFRR solenoid ON simultaneously, and check that the pedal cannot be depressed.

NOTICE:

Do not keep solenoid ON for more than 10 seconds continuously. When operating it continuously, set the interval of more than 20 seconds.

(c) Turn the SFRH and SFRR solenoid OFF simultaneously, and check that the pedal can be depressed.

(d) Turn the motor relay ON, and check that the pedal returns.

NOTICE:

Do not keep motor relay ON for more than 5 seconds continuously. When operating it continuously, set the interval of more than 20 seconds.

(e) Turn the motor relay OFF and release the brake pedal.

4. INSPECT OTHER WHEEL OPERATION

As in the same procedure, check the solenoids of other wheels.

HINT:

Left front wheel: SFLH, SFLR

Right rear wheel: SRRH, SRRR

Left rear wheel: SRLH, SRLR

5. CLEAR DTC (See page DI–276)

6. IN CASE OF NOT USING TOYOTA HAND–HELD TESTER:

HINT:

Using the ABS actuator checker (SST), check the operation of the actuator. If the actuator does not operate, check the operation of sub–wire harness G according to the instructions on pages DI–300 and DI–295. If the solenoid and/or pump motor relay are abnormal, replace the relay and inspect the actuator operation again.

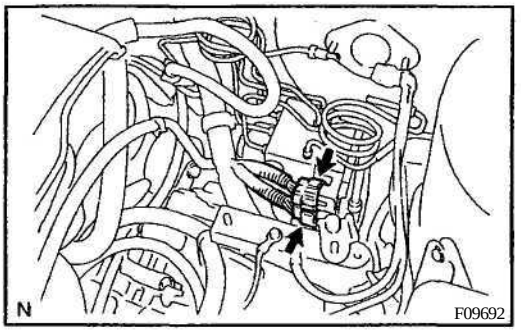

7. INSPECT BATTERY POSITIVE VOLTAGE

Battery positive voltage: 10 – 14 V

8. DISCONNECT CONNECTORS

Disconnect the 2 connectors from the actuator.

9. CONNECT ACTUATOR CHECKER (SST)

(a) Connect the actuator checker (SST) to the actuator side wire harness via the sub–wire harness (SST), as shown.

SST 09990-00150, 09990-00250, 09990-00300, 09990–00360

(b) Connect the red cable of the checker to the battery positive (+) terminal and black cable to the negative (-) terminal. Connect the black cable of the sub–wire harness to the battery negative (-) terminal or body ground.

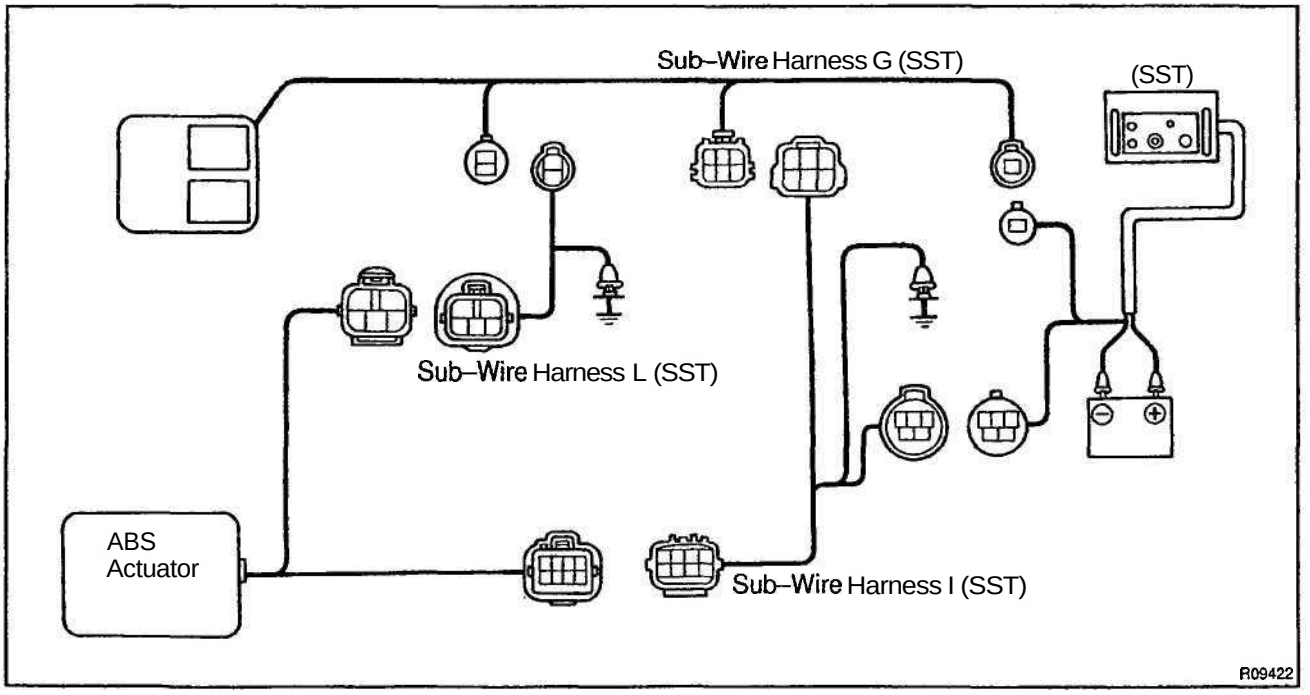

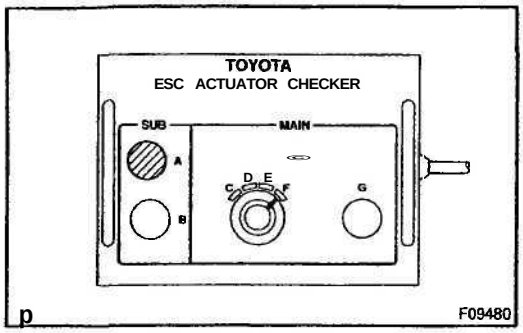

10. INSPECT ABS ACTUATOR OPERATION OF REAR LH WHEEL

HINT:

The functions of the ABS actuator checker switches are shown in the table below.

A	Motor ON/OFF
B	Front LH solenoid ON/OFF
C	–
D	Rear RH solenoid
E	Front RH solenoid
F	Rear LH solenoid
G	Solenoid ON/OFF

(a) Start the engine and run it at idle.

(b) Turn select switch of the actuator checker to the "F" position.

(c) Push and hold in the "A" switch for a few seconds. Make sure that you can hear the motor running.

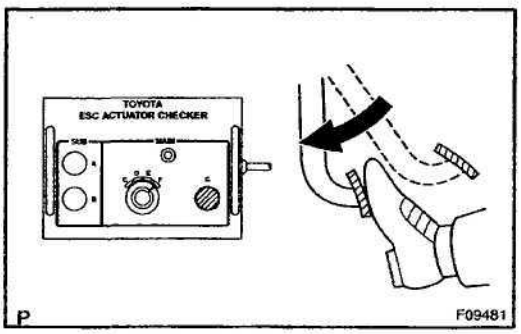

(d) Depress the brake pedal and hold it until step (g) is completed.

(e) Push and hold in the "G" switch for a few seconds, and check that the brake pedal does not go down.

NOTICE:

Do not keep the "G" switch pushed down for more than 10 seconds.

(f) Release the "G" switch and check that the pedal goes down.

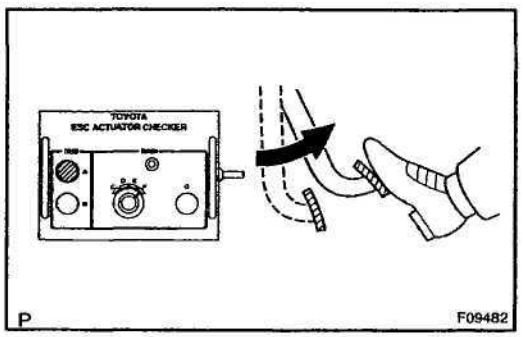

(g) Push the "A" switch and check that the pedal returns.

(h) Release the brake pedal.

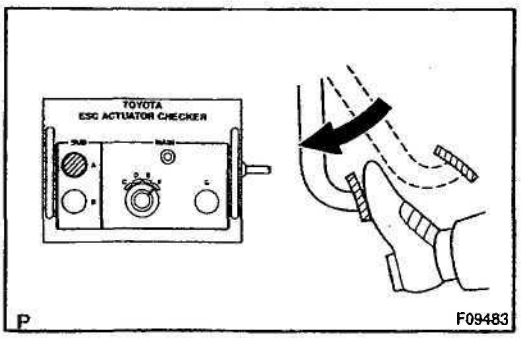

(i) Push and hold in the "A" switch for a few seconds.

(j) Depress the brake pedal and hold it for about 15 seconds. As you hold the pedal down, push the "A" switch for a few seconds and check that the brake pedal does not pulsate.

(k) Release the brake pedal.

11. INSPECT FOR OTHER WHEELS

(a) Turn the selector switch to "E" position (for front RH wheel).

(b) Repeating (c) to (j) to the step 4, check the actuator operation similarly.

(c) Similarly, inspect "front LH" and "rear RH" wheel.

HINT:

When inspecting the "front LH" wheel, push the "B" switch instead of the POWER SWITCH. This makes it possible to inspect wherever the selector switch position indicates.

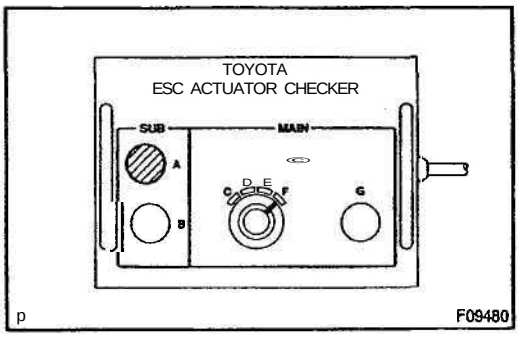

12. PUSH MOTOR SWITCH

(a) Push and hold in the "A" switch for a few seconds.

(b) Stop the engine.

13. DISCONNECT ACTUATOR CHECKER (SST) FROM ACTUATOR

(a) Disconnect the actuator checker (SST) and 3 sub–wire harness (SST) from the actuator.

SST 09990–00150, 09990–00250, 09990-00300, 09990–00360

(b) Connect the actuator connectors.

(c) Clear the DTC (See page DI–276).

BR0GX-02

COMPONENTS

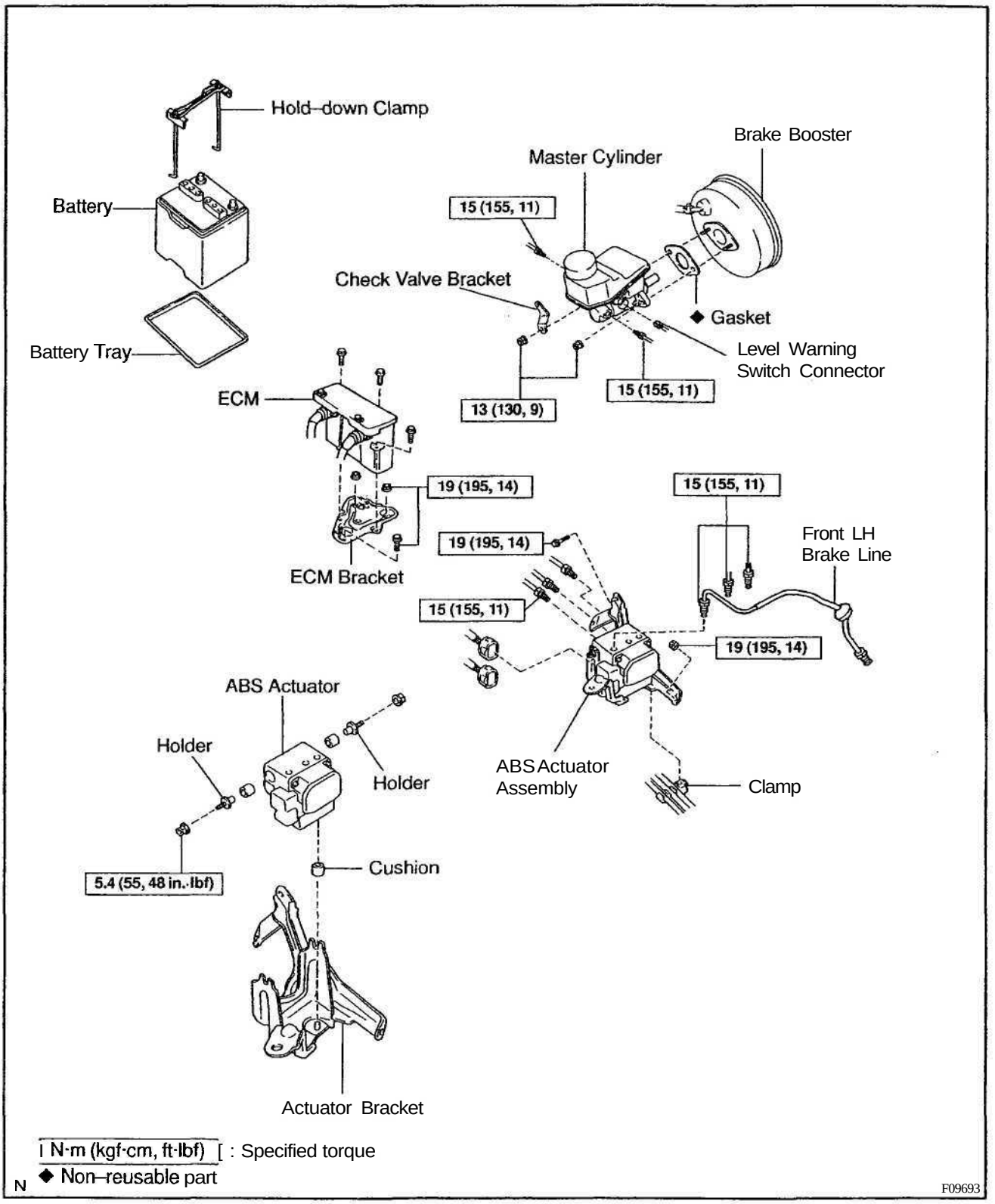

N·m (kgf·cm, ft·lbf) [: Specified torque

◆ Non–reusable part

N

F09693

BR14H-01

REMOVAL

1. REMOVE BATTERY

Remove the hold–down clamp, battery and battery tray.

2. REMOVE MASTER CYLINDER (See page BR–10)

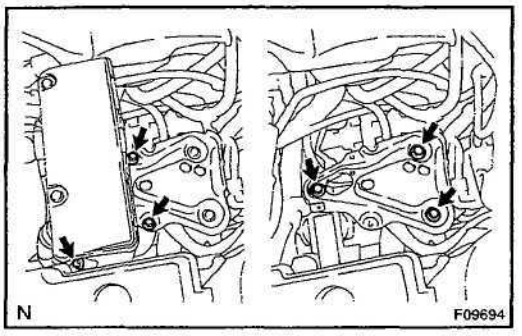

3. REMOVE ECM AND ECM BRACKET

(a) Remove the 3 bolts, and move the ECM aside.

(b) Disconnect the harness clamp, and remove the bolt, 2 nuts and ECM bracket.

Torque: 19 N-m (195 kgf-cm, 14 ft-lbf)

4. DISCONNECT 2 CONNECTORS

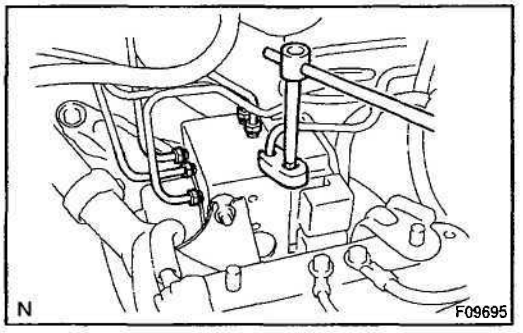

5. DISCONNECT BRAKE LINES

Using SST, disconnect the 6 brake lines.

SST 09023–00100

Torque: 15 N-m (155 kgf-cm, 11 ft-lbf)

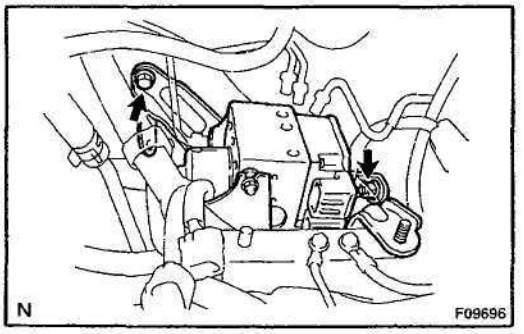

6. REMOVE ABS ACTUATOR

(a) Disconnect the hose clamp from the actuator bracket under side.

(b) Remove the bolt, nut and ABS actuator assembly.

Torque: 19 N m (195 kgf-cm, 14 ft-lbf)

(c) Remove the 2 nuts and ABS actuator from the actuator bracket.

Torque: 5.4 N-m (55 kgf-cm, 48 in.-lbf)

(d) Remove the 2 holders and 3 cushions from the ABS actuator.

BR0OZ-02

INSTALLATION

Installation is in the reverse order of removal (See page BR-53).

HINT:

- After installation, fill the brake reservoir with brake fluid and bleed brake system (See page BR–4).
- Check for leaks.

FRONT SPEED SENSOR

COMPONENTS

BR0RD-02

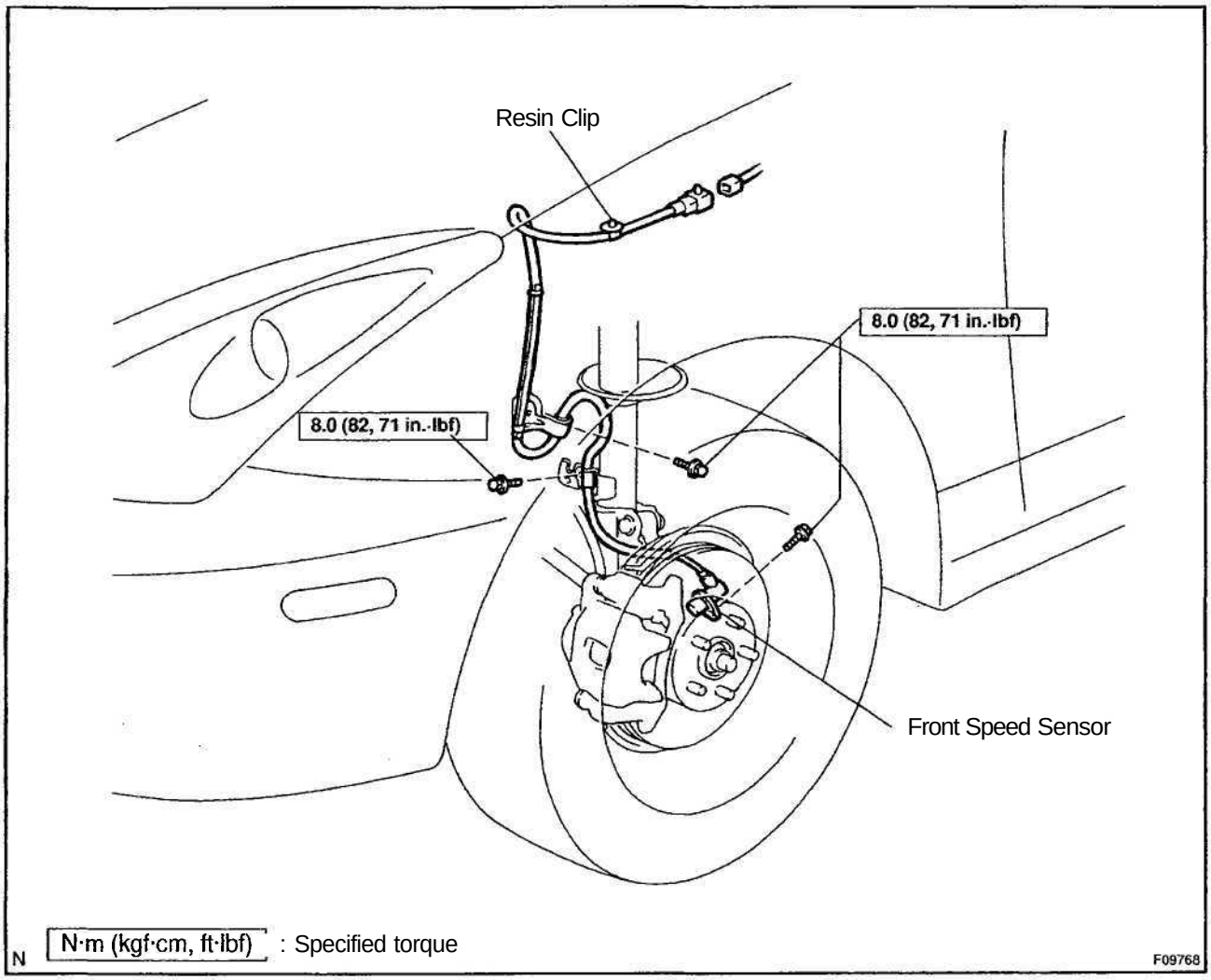

BRDR1-02

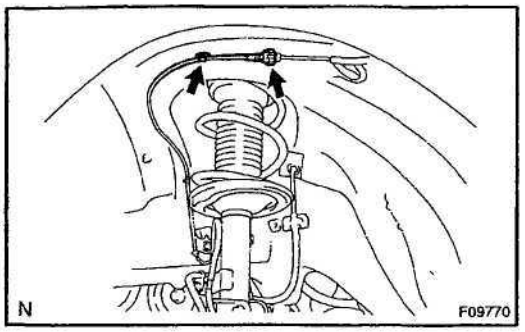

REMOVAL

1. DISCONNECT SPEED SENSOR CONNECTOR

(a) Remove the front wheel.
Torque: 103 N·m (1,050 kgf·cm, 76 ft·lbf)

(b) Remove the fender liner.

(c) Disconnect the speed sensor connector and resin clip.

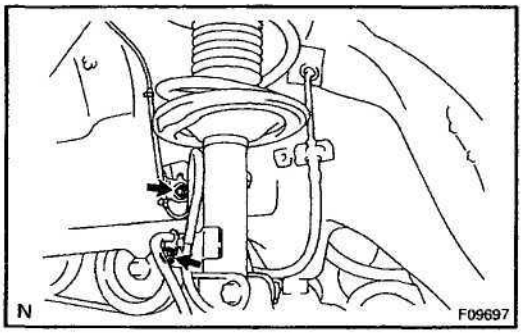

2. REMOVE SPEED SENSOR

(a) Remove the 2 clamp bolts holding the sensor harness from the body and shock absorber.
Torque: 8.0 N·m (82 kgf·cm, 71 in.·lbf)

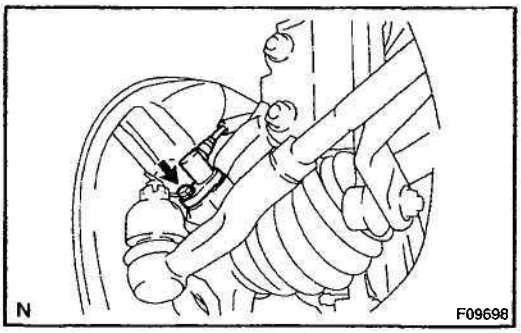

(b) Remove the speed sensor installation bolt from the steering knuckle.
Torque: 8.0 N·m (82 kgf·cm, 71 in.·lbf)

NOTICE:

At the time of installation, please refer to the following item.

- **There are no foreign objects on the sensor or the part of the knuckle to which the sensor is to be installed.**
- **The sensor is installed flat against the knuckle when you tighten the bolt.**

INSTALLATION

Installation is in the reverse order of removal (See page BR–56).
AFTER INSTALLATION, CHECK SPEED SENSOR SIGNAL (See page DI–276)

REAR SPEED SENSOR

COMPONENTS

BRGR3-02

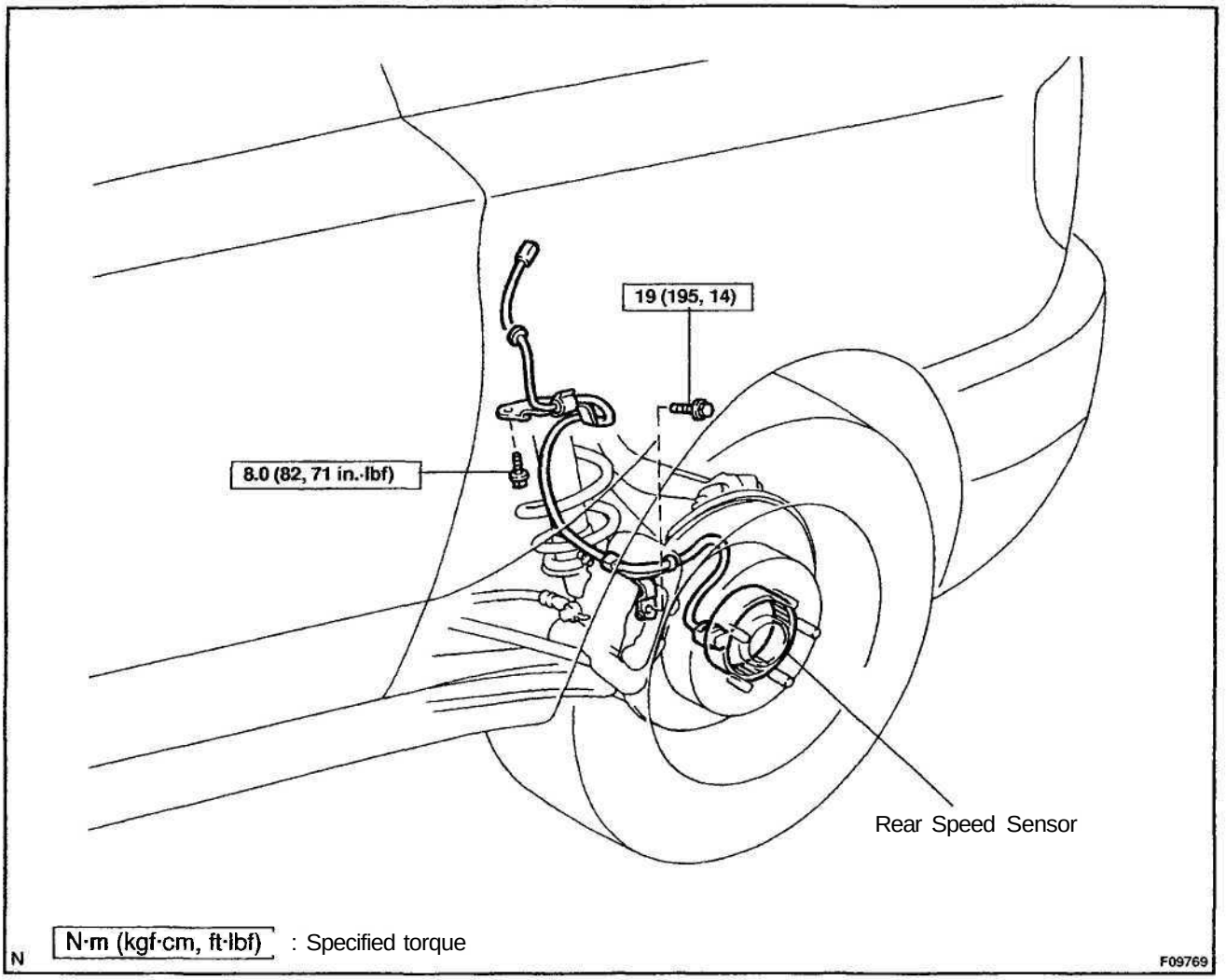

8R141-01

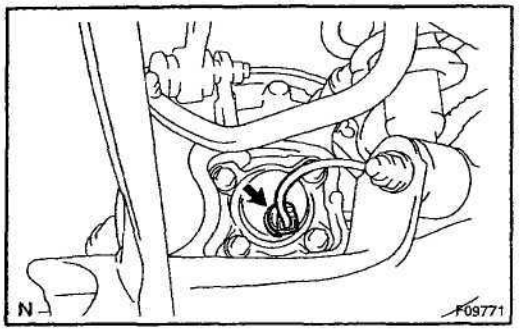

REMOVAL

1. REMOVE REAR WHEEL

2. DISCONNECT SPEED SENSOR CONNECTOR

Disconnect the connector from the speed sensor.

3. REMOVE SPEED SENSOR WITH REAR AXLE HUB (See Page SA-55)

4. REMOVE SPEED SENSOR

(a) Using a pin punch and hammer, drive out the 2 pins and remove the 2 attachments from SST.
SST 09520–00031

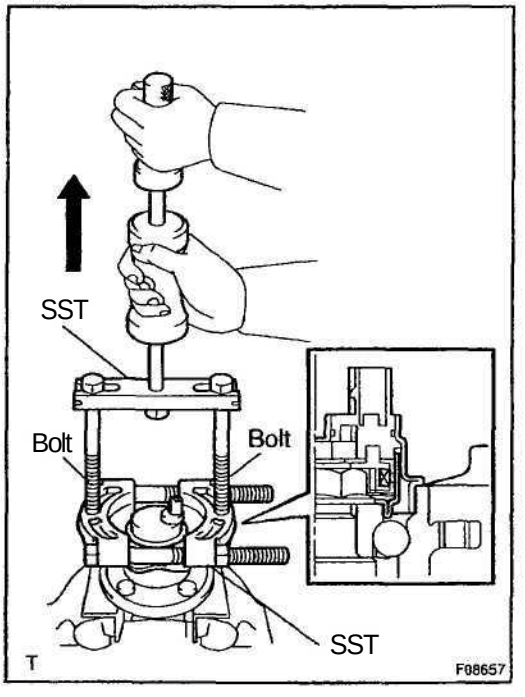

(b) Mount the rear axle hub in a soft jaw vise.

NOTICE:

Replace the axle hub assembly if it is dropped or a strong shock is given to it.

(c) Using SST and 2 bolts (Diameter: 12 mm, Pitch: 1.5 mm), remove the speed sensor.
SST 09520–00031 (09520–00040, 09521–00020), 09950–00020

NOTICE:

- **If a damage is inflicted to the sensor rotor, replace the axle hub assembly.**
- **Do not scratch the contacting surface of axle hub and speed sensor.**

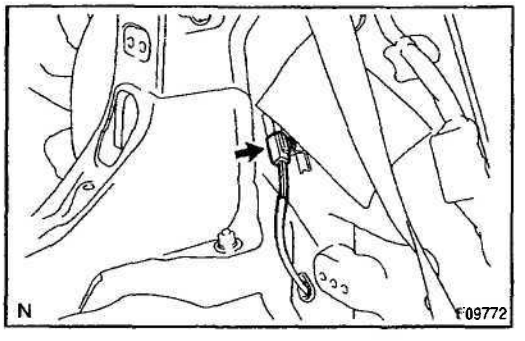

5. IF NECESSARY, REPLACE SPEED SENSOR WIRE HARNESS

(a) Remove the seat cushion, seatback and quarter trim (See page BO–88).

(b) Disconnect the speed sensor wire harness connector.

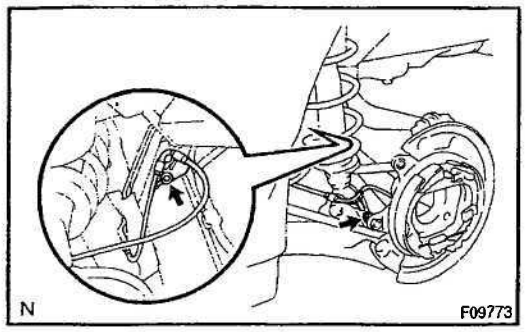

(c) Remove the 2 clamp bolts holding the sensor harness from the lower arm and body.

Torque:

Lower arm side: 19 N·m (195 kgf cm, 14 ft·lbf)

Body side: 8.0 N·m (82 kgf·cm, 71 in.·lbf)

(d) Replace the sensor wire harness with the grommet.

BR14J-01

INSTALLATION

1. INSTALL NEW SPEED SENSOR

(a) Clean the contacting surface of the axle hub and a new speed sensor.

NOTICE:

Do not stick any foreign objects to the sensor rotor.

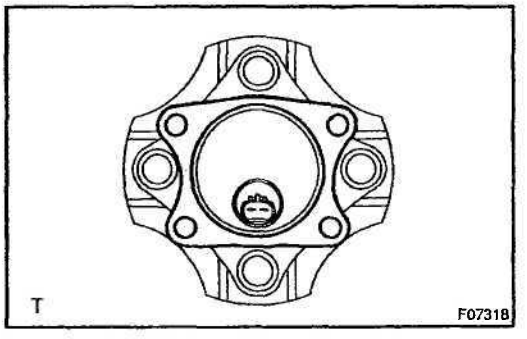

(b) Place the speed sensor on the axle hub so that the connector makes the most downward position under the on–vehicle condition.

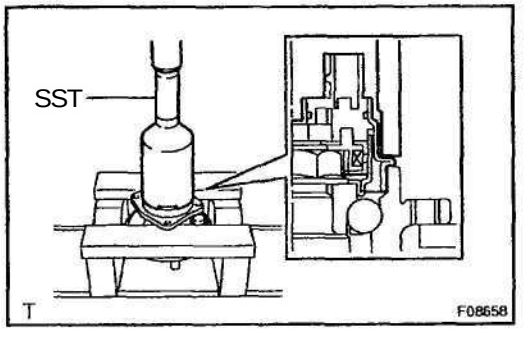

(c) Using SST and a press, install a new speed sensor to the axle hub.

SST 09214–76011

NOTICE:

- **Do not tap the speed sensor with a hammer directly.**
- **Check that there should be no foreign objects on the speed sensor detection portion.**
- **Press in the speed sensor straight and slowly.**

2. INSTALL SPEED SENSOR WITH REAR AXLE (See page SA–59)

3. CONNECT SPEED SENSOR CONNECTOR

4. INSTALL REAR WHEEL

Torque: 103 N·m (1,050 kgf·cm, 76 tt-lbf)

5. CHECK SPEED SENSOR SIGNAL (See page DI–276)

- MEMO -

STEERING

STEERING SYSTEM SR–1
TROUBLESHOOTING SR–2
DRIVE BELT SR–3
POWER STEERING FLUID SR–4
STEERING WHEEL SR–8
TILT STEERING COLUMN SR-9
POWER STEERING VANE PUMP SR-22
POWER STEERING GEAR SR-33

SR

STEERING SYSTEM

SR06F–02

PRECAUTION

- Care must be taken to replace parts properly because they could affect the performance of the steering system and result in a driving hazard.
- The CELICA is equipped with an SRS (Supplemental Restraint System) such as the driver airbag and front passenger airbag. Failure to carry out service operation in the correct sequence could cause the SRS to unexpectedly deploy during servicing, possibly leading to a serious accident. Before servicing (including removal or installation of parts, inspection or replacement), be sure to read the precautionary notices in the RS section.

TROUBLESHOOTING

PROBLEM SYMPTOMS TABLE

SR06G-03

Use the table below to help you find the cause of the problem. The numbers indicate the priority of the likely cause of the problem. Check each part in the order shown. If necessary, repair or replace these parts.

Symptom	Suspect Area	Seepage
Hard steering	1. Tires (Improperly inflated)	SA–2
	2. Power steering fluid level (Low)	SR–5
	3. Drive belt (Loose)	SR–3
	4. Front wheel alignment (Incorrect)	SA–4
	5. Steering system joints (Worn)	–
	6. Suspension arm ball joints (Worn)	SA–48
	7. Steering column (Binding)	–
	8. Power steering vane pump	SR–22
	9. Power steering gear	SR-33
Poor return	1. Tires (Improperly inflated)	SA–2
	2. Front wheel alignment (Incorrect)	SA–4
	3. Steering column (Binding)	–
	4. Power steering gear	SR–33
Excessive play	1. Steering system joints (Worn)	–
	2. Suspension arm ball joints (Worn)	SA–48
	3. Intermediate shaft, Sliding yoke (Worn)	–
	4. Front wheel bearing (Worn)	SA–12
	5. Power steering gear	SR–33
Abnormal noise	1. Power steering fluid level (Low)	SR–5
	2. Steering system joints (Worn)	–
	3. Power steering vane pump	SR–22
	4. Power steering gear	SR-33

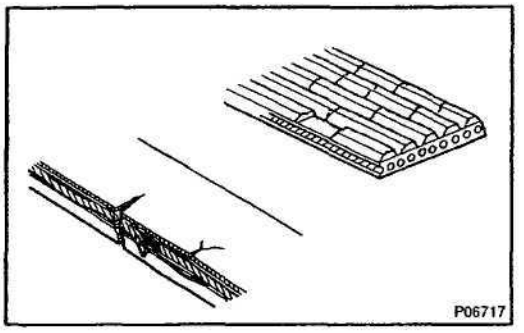

DRIVE BELT

INSPECTION

SR08H-03

INSPECT DRIVE BELT

Visually check the drive belt for excessive wear, frayed cords, etc.

If any defect has been found, replace the drive belt.

HINT:

- Cracks on the rib side of a belt are considered acceptable. If the missing chunks from the ribs are found on the drive belt, it should be replaced.

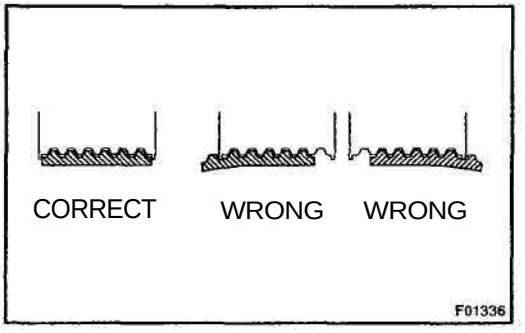

- After installing a drive belt, check that it fits properly in the ribbed grooves.
- Check with your hand to confirm that the drive belt has not slipped out of the groove on the bottom of the pulley.

S

POWER STEERING FLUID

SR09I–03

BLEEDING

1. **CHECK FLUID LEVEL (See page SR–5)**
2. **JACK UP FRONT OF VEHICLE AND SUPPORT IT WITH STANDS**
3. **TURN STEERING WHEEL**

With the engine stopped, turn the steering wheel slowly from lock to lock several times.

4. **LOWER VEHICLE**
5. **START ENGINE**

Run the engine at idle for a few minutes.

6. **TURN STEERING WHEEL**

(a) With the engine idling, turn the steering wheel to left or right full lock position and keep it there for 2-3 seconds, then turn the steering wheel to the opposite full lock position and keep it there for 2-3 seconds.

(b) Repeat (a) several times.

7. **STOP ENGINE**

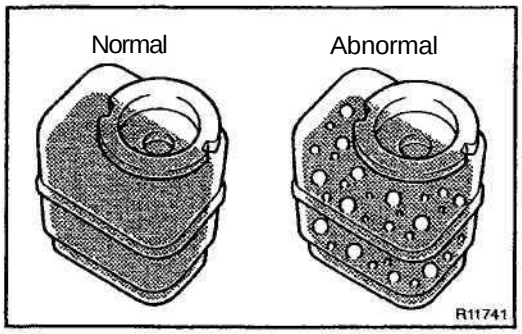

8. **CHECK FOR FOAMING OR EMULSIFICATION**

If the system has to be bled twice specifically because of foaming or emulsification, check for fluid leaks in the system.

9. **CHECK FLUID LEVEL (See page SR–5)**

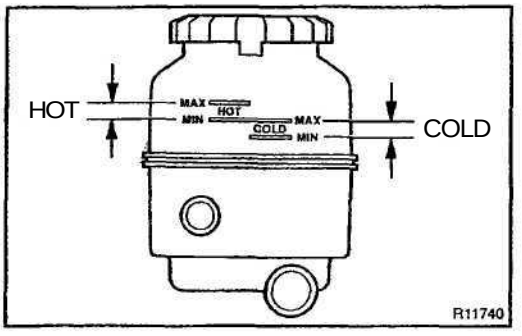

INSPECTION

1. CHECK FLUID LEVEL

(a) Keep the vehicle level.

(b) With the engine stopped, check the fluid level in the oil reservoir.

If necessary, add fluid.

Fluid: ATF DEXRON® II or III

HINT:

Check that the fluid level is within the HOT LEVEL range on the reservoir. If the fluid is cold, check that it is within the COLD LEVEL range.

(c) Start the engine and run it at idle.

(d) Turn the steering wheel from lock to lock several times to boost fluid temperature.

Fluid temperature: 80°C (176°F)

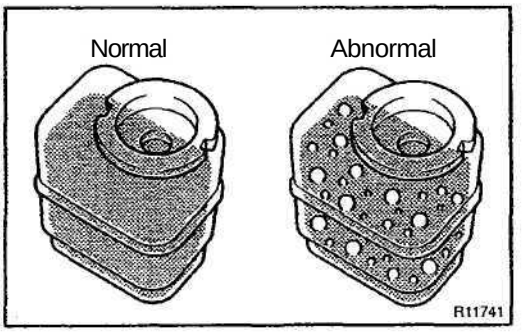

(e) Check for foaming or emulsification.

If there is foaming or emulsification, bleed power steering system (See page SR–4).

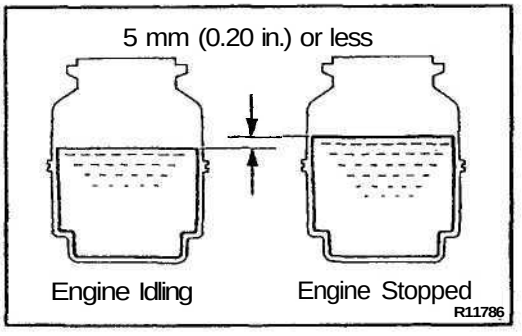

(f) With the engine idling, measure the fluid level in the oil reservoir.

(g) Stop the engine.

(h) Wait a few minutes and remeasure the fluid level in the oil reservoir.

Maximum fluid level rise: 5 mm (0.20 in.)

If a problem is found, bleed power steering system (See page SR–4).

(i) Check the fluid level.

SR

2. CHECK STEERING FLUID PRESSURE

(a) Disconnect the pressure feed tube from the PS vene pump (See page SR-24).

(b) Connect SST, as shown in the illustration below.
SST 09640-10010 (09641–01010, 09641-01030, 09641–01060)

NOTICE:
Check that the valve of the SST is in the open position.

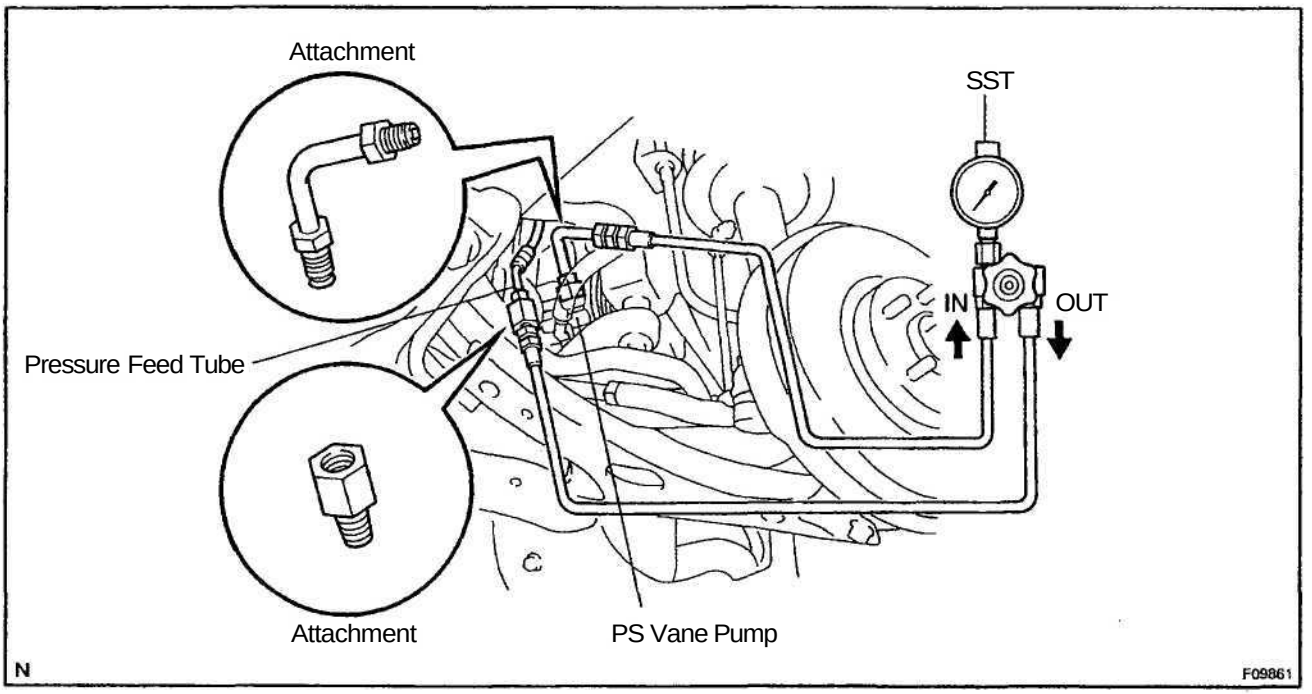

(c) Bleed the power steering system (See page SR–4).

(d) Start the engine and run it at idle.

(e) Turn the steering wheel from lock to lock several times to boost fluid temperature.
Fluid temperature: 80 °C (176 °F)

SR

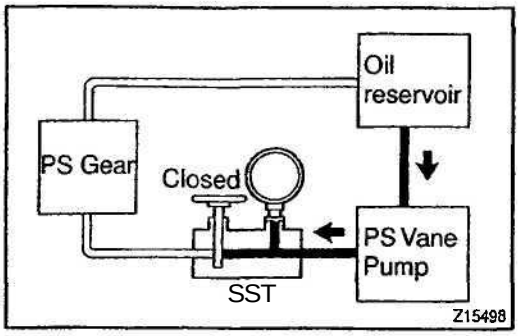

(f) With the engine idling, close the valve of the SST and observe the reading on the SST.
Minimum fluid pressure:
7,355 kPa (75 kgf/cm², 1,067 psi)

NOTICE:

- **Do not keep the valve closed for more than 10 seconds.**
- **Do not let the fluid temperature become too high.**

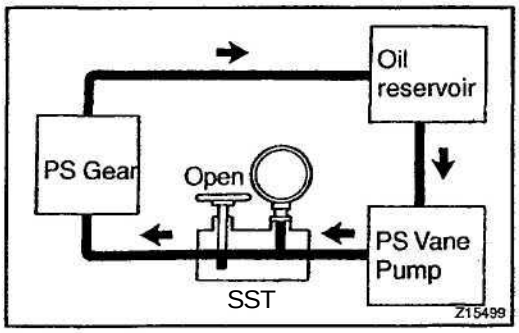

(g) With the engine idling, open the valve fully.
(h) Measure the fluid pressure at engine speeds of 1,000 rpm and 3,000 rpm.
Difference fluid pressure:
490 kPa (5 kgf/cm^2, 71 psi) or less

NOTICE:
Do not turn the steering wheel.

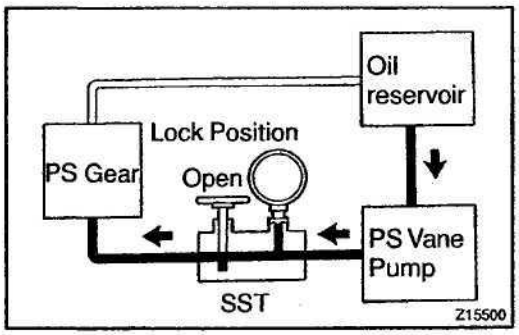

(i) With the engine idling and valve fully opened, turn the steering wheel to full lock.
Minimum fluid pressure:
7,355 kPa (75 kgf/cm^2, 1,067 psi)

NOTICE:
- **Do not maintain lock position for more than 10 seconds.**
- **Do not let the fluid temperature become too high.**

(j) Disconnect the SST.
SST 09640-10010 (09641-01010, 09641-01030, 09641-01060)
(k) Connect the pressure feed tube to the PS vane pump (See page SR-32).
(l) Bleed the power steering system (See page SR-4).

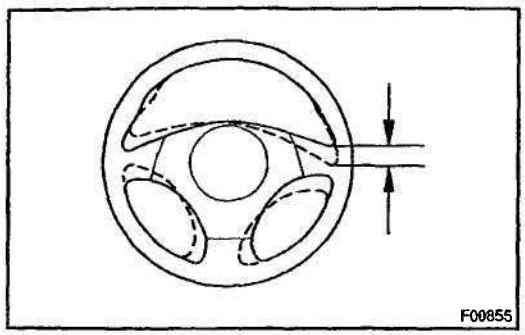

STEERING WHEEL

SR08X-03

INSPECTION

1. CHECK STEERING WHEEL FREEPLAY

(a) Stop the vehicle and face the tires straight ahead.

(b) Rock the steering wheel gently up and down with a finger lightly, check the steering wheel freeplay.

Maximum freeplay: 30 mm (1.18 in.)

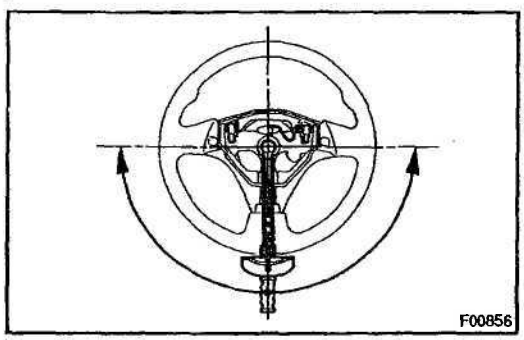

2. CHECK STEERING EFFORT

(a) Center the steering wheel.

(b) Remove the steering wheel pad (See page SR–11).

(c) Start the engine and run it at idle.

(d) Measure the steering effort in both directions.

Steering effort (Reference):
6.5 N·m (65 kgf·cm, 58 in.·lbf)

HINT:

Take the tire type, pressure and contact surface into consideration before making your diagnosis.

(e) Install the steering wheel set nut.

Torque: 34 N·m (350 kgf·cm, 25 ft·lbf)

(f) Install the steering wheel pad (See page SR–19).

TILT STEERING COLUMN

COMPONENTS

SR0YK-01

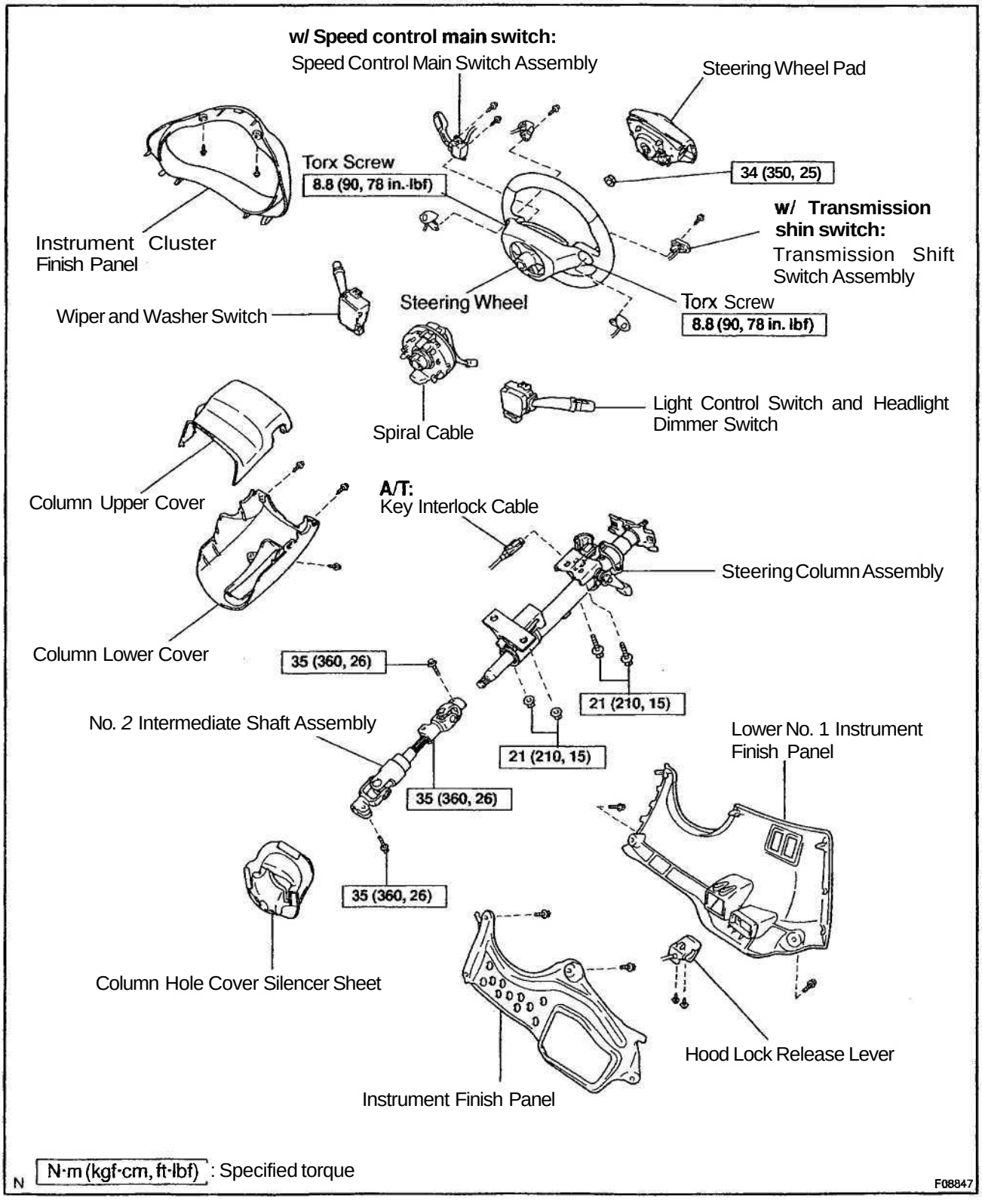

SR

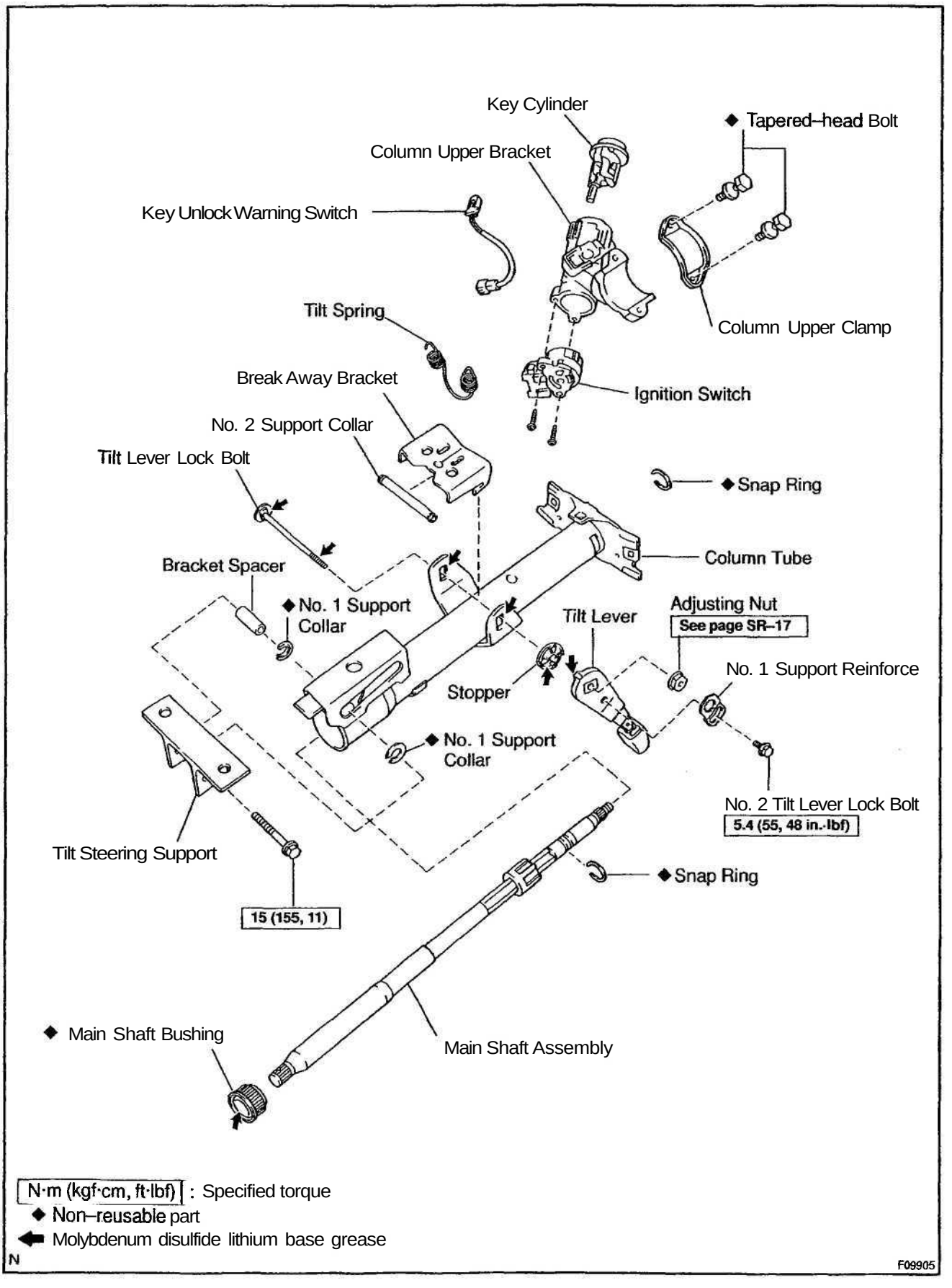

N·m (kgf·cm, ft·lbf) : Specified torque
◆ Non–reusable part
⬅ Molybdenum disulfide lithium base grease

N

F09905

SR

SR0YL-01

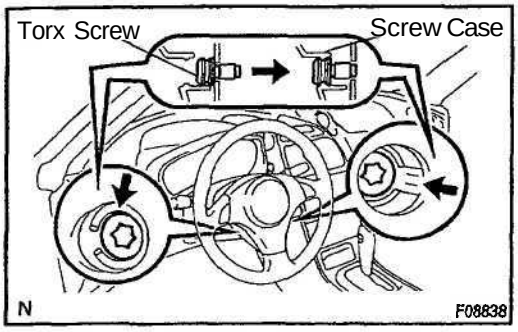

REMOVAL

1. REMOVE STEERING WHEEL PAD

NOTICE:

If the airbag connector is disconnected with the ignition switch at ON, DTCs will be recorded.

(a) Place the front wheels facing straight ahead.

(b) Using a torx socket wrench, loosen the 2 torx screws until the groove along the screw circumference catches on the screw case.

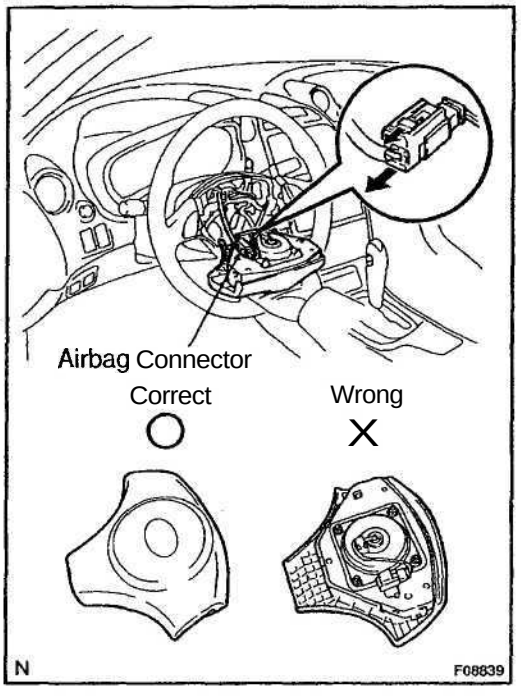

(c) Pull out the wheel pad from the steering wheel and disconnect the airbag connector.

CAUTION:

- **When storing the wheel pad, keep the upper surface of the pad facing upward.**
- **Never disassemble the wheel pad.**

NOTICE:

When removing the wheel pad, take care not to pull the airbag wire harness.

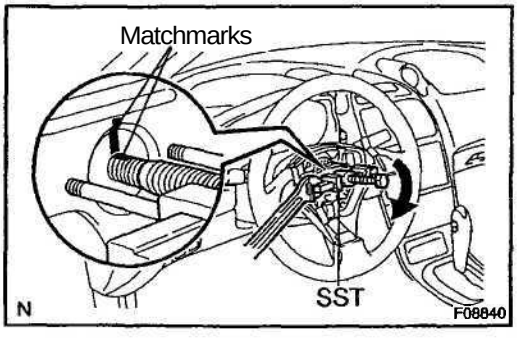

2. REMOVE STEERING WHEEL

(a) Disconnect the connector.

(b) Remove the steering wheel set nut.

(c) Place matchmarks on the steering wheel and main shaft assembly.

(d) Using SST, remove the steering wheel.

SST 09950–50012 (09951–05010, 09952–05010, 09953–05020, 09954–05020)

3. REMOVE LOWER NO. 1 INSTRUMENT FINISH PANEL

(a) Remove the 2 screws and disconnect the hood lock release lever.

(b) Remove the 2 bolts and lower No. 1 instrument finish panel.

(c) Disconnect the connector.

4. REMOVE INSTRUMENT FINISH PANEL

Remove the 2 bolts and instrument finish panel.

5. REMOVE INSTRUMENT CLUSTER FINISH PANEL

Remove the 2 screws and instrument cluster finish panel.

6. REMOVE COLUMN UPPER AND LOWER COVERS

Remove the 3 screws, column upper and lower covers.

7. REMOVE SPIRAL CABLE, LIGHT CONTROL SWITCH AND HEADLIGHT DIMMER SWITCH AND WIPER AND WASHER SWITCH

(a) Disconnect the 3 connectors from the spiral cable, light control switch and headlight dimmer switch and wiper and washer switch.

(b) Disconnect the airbag connector from the spiral cable.

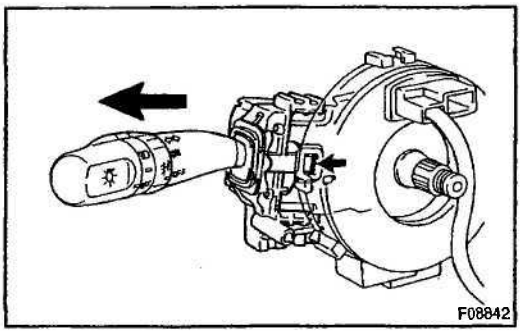

(c) Push the claw and pull out the light control switch and headlight dimmer switch.

(d) Employ the same manner described above to the wiper and washer switch.

(e) Remove the spiral cable.

NOTICE:

Do not disassemble the spiral cable or apply oil to it.

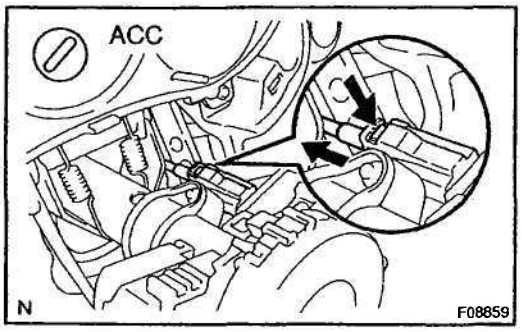

8. A/T:

REMOVE KEY INTERLOCK CABLE

With the key in ACC, push the claw and pull out the key interlock cable.

9. REMOVE COLUMN HOLE COVER SILENCER SHEET

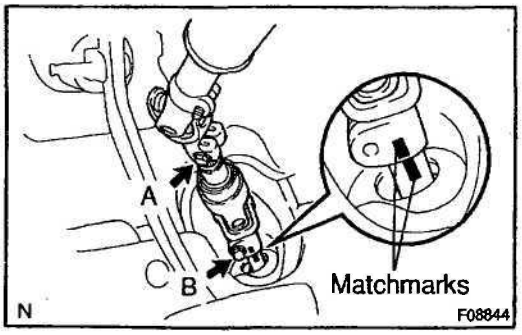

10. DISCONNECT NO. 2 INTERMEDIATE SHAFT ASSEMBLY

(a) Place matchmarks on the No. 2 intermediate shaft assembly and intermediate extension.

(b) Loosen the bolt A and remove the bolt B, then disconnect the No. 2 intermediate shaft assembly.

11. REMOVE STEERING COLUMN ASSEMBLY

(a) Disconnect the connectors.

(b) Remove the 2 bolts, nuts and steering column assembly.

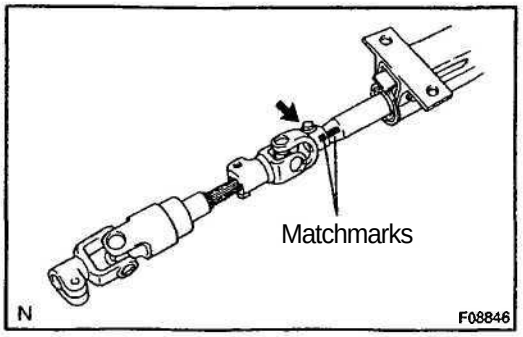

12. REMOVE NO. 2 INTERMEDIATE SHAFT ASSEMBLY

(a) Place matchmarks on the No. 2 intermediate shaft assembly and main shaft assembly.

(b) Remove the bolt and No. 2 intermediate shaft assembly.

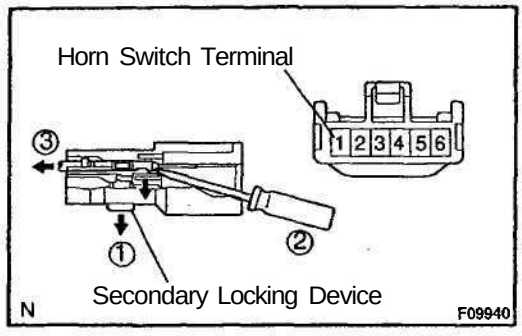

13. w/ Transmission shift switch:

REMOVE TRANSMISSION SHIFT SWITCH ASSEMBLY FROM STEERING WHEEL

(a) Remove the 2 screws.
(b) Disengage the secondary locking device of the connector.
(c) Release the locking lug of the terminal 1 (horn switch terminal), and pull the terminal out of the rear.
(d) Remove the transmission shift switch assembly.

14. w/ Speed control main switch:

REMOVE SPEED CONTROL MAIN SWITCH ASSEMBLY FROM STEERING WHEEL

(a) Remove the 2 screws.
(b) Disengage the secondary locking device of the connector.
(c) Release the locking lug of the terminal 1 (horn switch terminal), and pull the terminal out of the rear.
(d) Remove the speed control main switch assembly.

15. w/ Transmission shift switch and speed control main switch:

REMOVE TRANSMISSION SHIFT SWITCH ASSEMBLY AND SPEED CONTROL MAIN SWITCH ASSEMBLY FROM STEERING WHEEL

(a) Remove the 2 screws from the transmission shift switch assembly.
(b) Remove the 2 screws from the speed control main switch assembly.
(c) Disengage the secondary locking device of the connector.
(d) Release the locking lug of the terminal 1 (horn switch terminal), and pull the terminal out of the rear.
(e) Remove the transmission shift switch assembly and speed control main switch assembly.

SR0YM-01

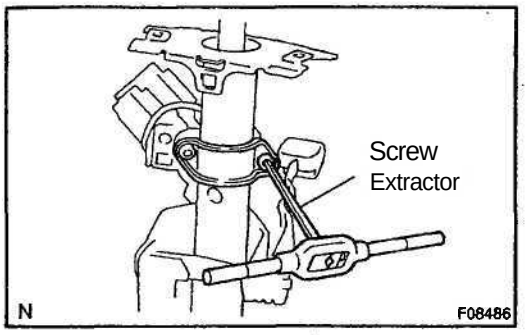

DISASSEMBLY

1. REMOVE COLUMN UPPER BRACKET AND COLUMN UPPER CLAMP

(a) Using a centering punch, mark the center of the 2 tapered–head bolts.

(b) Using a 3 - 4 mm (0.12 – 0.16 in.) drill, drill into the 2 bolts.

(c) Using a screw extractor, remove the 2 bolts, column upper bracket and column upper clamp.

2. REMOVE TILT STEERING SUPPORT

Remove the bolt and tilt steering support.

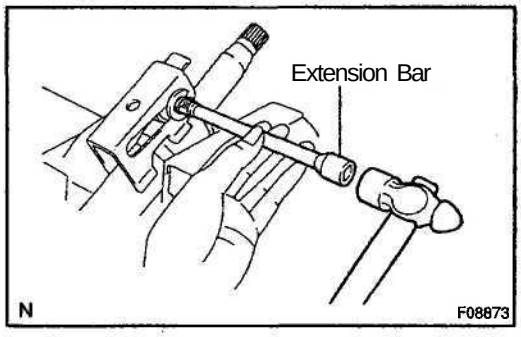

3. REMOVE BRACKET SPACER AND 2 NO. 1 SUPPORT COLLARS

(a) Using an extension bar and a hammer, tap out the bracket spacer.

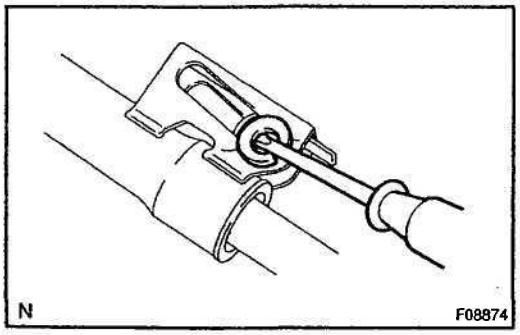

(b) Using a screwdriver, remove the 2 No. 1 support collars.

4. REMOVE TILT LEVER AND BREAK AWAY BRACKET

(a) Remove the tilt spring.

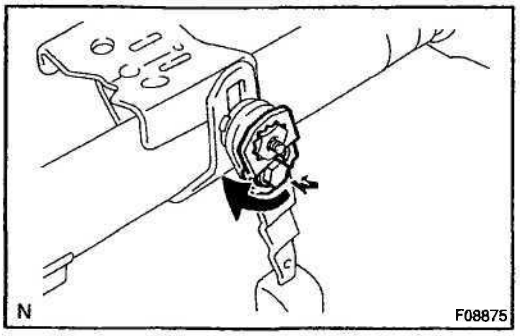

(b) Remove the No. 2 tilt lever lock bolt and No. 1 support reinforce.

HINT:

This bolt is left–handed one.

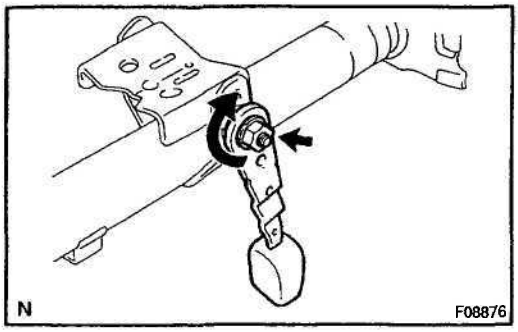

(c) Remove the adjusting nut, tilt lever, stopper, tilt lever lock bolt and break away bracket.

HINT:

This nut is left-handed one.

(d) Remove the No. 2 support collar from the break away bracket.

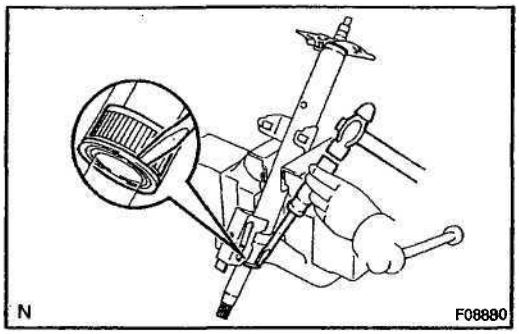

5. REMOVE MAIN SHAFT BUSHING

Using a screwdriver and hammer, tap out the main shaft bushing.

6. REMOVE MAIN SHAFT ASSEMBLY

(a) Using a snap ring expander, remove the snap ring on the upper side.

(b) Remove the main shaft assembly.

(c) Using a snap ring expander, remove the snap ring on the lower side.

SR0VN-02

INSPECTION

1. INSPECT STEERING LOCK OPERATION

Check that the steering lock mechanism operates properly.

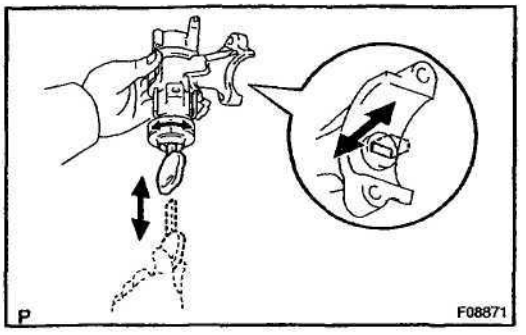

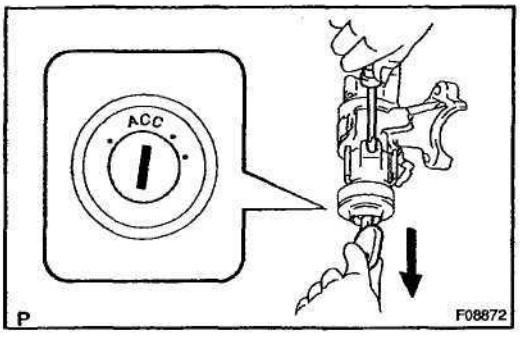

2. IF NECESSARY, REPLACE KEY CYLINDER

(a) Place the ignition key at the ACC position.

(b) Push down the stop pin with a screwdriver, and pull out the cylinder.

(c) Install a new cylinder.

HINT:

Make sure the key is at the ACC position.

3. INSPECT IGNITION SWITCH (See page BE-14)

4. IF NECESSARY, REPLACE IGNITION SWITCH

(a) Remove the 2 screws and ignition switch from the column upper bracket.

(b) Install a new ignition switch with the 2 screws.

5. INSPECT KEY UNLOCK WARNING SWITCH (See page BE-14)

6. IF NECESSARY, REPLACE KEY UNLOCK WARNING SWITCH

(a) Slide the key unlock warning switch out of the column upper bracket.

(b) Slide a new key unlock warning switch in the column upper bracket.

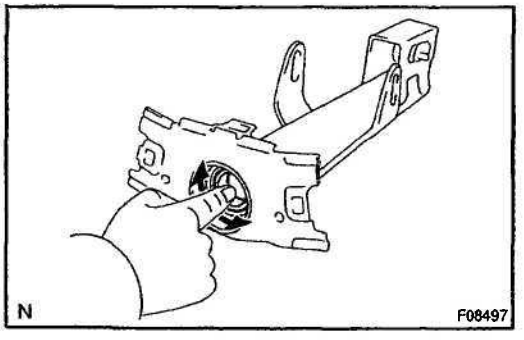

7. INSPECT BEARING

Check the bearing rotation condition and check for abnormal noise.

If the bearing is worn or damaged, replace the column tube.

SR0VO-02

REASSEMBLY

NOTICE:

When using a vise, do not overtighten it.

1. COAT PARTS INDICATED BY ARROWS WITH MOLYBDENUM DISULFIDE LITHIUM BASE GREASE
(See page SR–9)

2. INSTALL MAIN SHAFT ASSEMBLY

(a) Using a snap ring expander, install a new snap ring on the lower side.

(b) Install the main shaft assembly.

(c) Using a snap ring expander, install a new snap ring on the upper side.

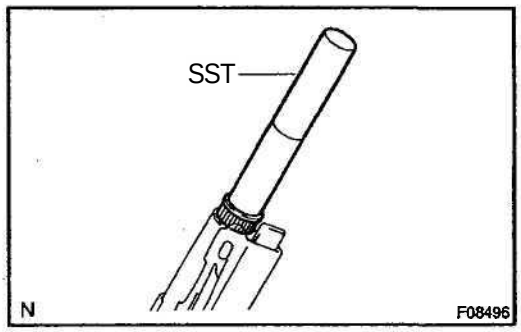

3. **INSTALL MAIN SHAFT BUSHING**

(a) Coat a new bushing with molybdenum disulfide lithium base grease.

(b) Using SST and a hammer, tap in the main shaft bushing.
SST 09608–04031

4. **INSTALL BREAK AWAY BRACKET AND TILT LEVER**

(a) Install the No. 2 support collar to the break away bracket.

(b) Install the break away bracket, tilt lever lock bolt, stopper and tilt lever.

HINT:

Align the holes in the column tube with the projections of the tilt lever lock bolt and stopper.

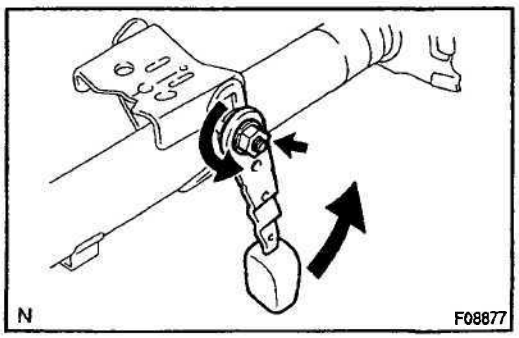

(c) Install the adjusting nut by rotating it counterclockwise in the specified torque so that the locking load (load applied to when a knob is operated) of the tilt lever will be 38 - 82 N (3.9 - 8.4 kgf, 8.5 – 18.4 lbf).

Torque: 9 N m - 14 N·m (90 kgf·cm – 145 kgf·cm, 80 in.·lbf – 10 ft·lbf)

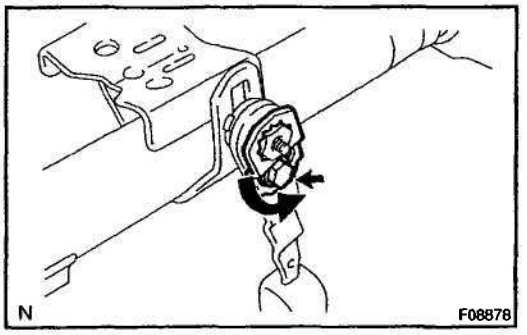

(d) Install the No. 1 support reinforce with the No. 2 tilt lever lock bolt by turning it counterclockwise.

Torque: 5.4 N·m (55 kgf·cm, 48 in.·lbf)

HINT:

Align the No. 1 support reinforce with the nut to eliminate looseness by turning the No. 1 support reinforce counterclockwise a little, then torque the No. 2 tilt lever lock bolt.

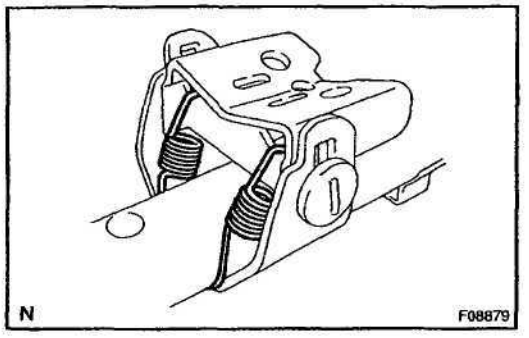

(e) Install the tilt spring.

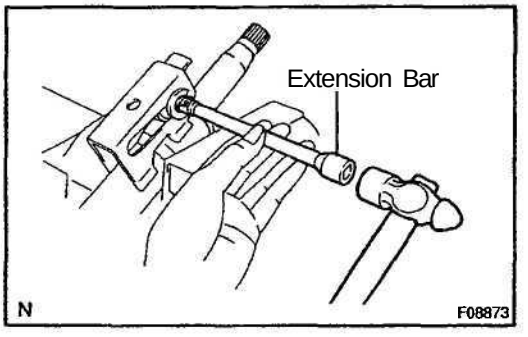

5. INSTALL 2 NO. 1 SUPPORT COLLARS AND BRACKET SPACER

(a) Install 2 new No. 1 support collars.

HINT:

Install the white support collar to the RH side, black support collar to the LH side.

(b) Using an extension bar and a hammer, drive in the bracket spacer.

6. INSTALL TILT STEERING SUPPORT

Install the tilt steering support with the bolt.

Torque: 15 N·m (155 kgf·cm, 11 tt-lbf)

NOTICE:

Make sure that the tilt steering support is installed facing in the correct direction.

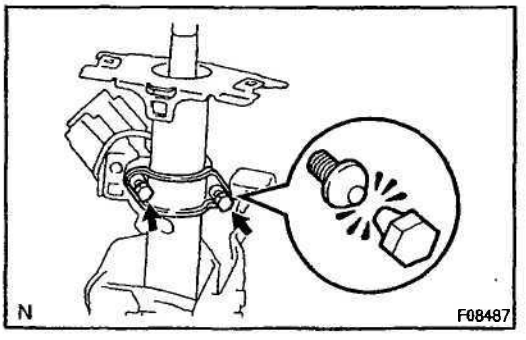

7. INSTALL COLUMN UPPER BRACKET AND COLUMN UPPER CLAMP

(a) Install the column upper bracket and column upper clamp with 2 new tapered–head bolts.

(b) Tighten the 2 tapered–head bolts until the bolt heads break off.

SR0YN-01

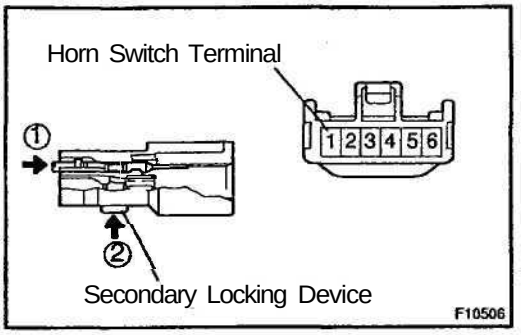

INSTALLATION

1. w/ Transmission shift switch:
INSTALL TRANSMISSION SHIFT SWITCH ASSEMBLY TO STEERING WHEEL

(a) Install the transmission shift switch assembly.
(b) Push the terminal 1 (horn switch terminal) into the connector.
(c) Engage the secondary locking device of the connector.
(d) Install the 2 screws.

2. w/ Speed control main switch:
INSTALL SPEED CONTROL MAIN SWITCH ASSEMBLY TO STEERING WHEEL

(a) Install the speed control main switch assembly.
(b) Push the terminal 1 (horn switch terminal) into the connector.
(c) Engage the secondary locking device of the connector.
(d) Install the 2 screws.

3. w/ Transmission shift switch and speed control main switch:
INSTALL TRANSMISSION SHIFT SWITCH ASSEMBLY AND SPEED CONTROL MAIN SWITCH ASSEMBLY TO STEERING WHEEL

(a) Install the transmission shift switch assembly and speed control main switch assembly.
(b) Push the terminal 1 (horn switch terminal) into the connector.
(c) Engage the secondary locking device of the connector.
(d) Install the 2 screws to the transmission shift switch assembly.
(e) Install the 2 screws to the speed control main switch assembly.

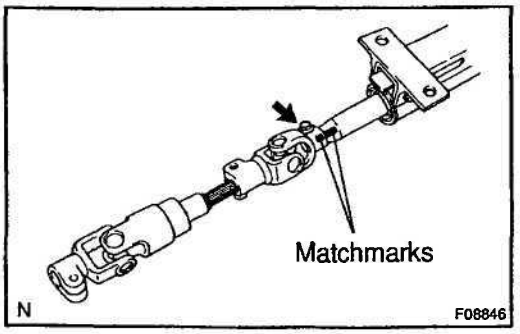

4. INSTALL NO. 2 INTERMEDIATE SHAFT ASSEMBLY

(a) Align the matchmarks on the No. 2 intermediate shaft assembly and main shaft assembly.
(b) Install the No. 2 intermediate shaft assembly with the bolt.
Torque: 35 N·m (360 kgf·cm, 26 ft·lbf)

5. INSTALL STEERING COLUMN ASSEMBLY

(a) Install the steering column assembly with the 2 bolts and nuts.
Torque: 21 N·m (210 kgf·cm, 15 ft·lbf)
(b) Connect the connectors.

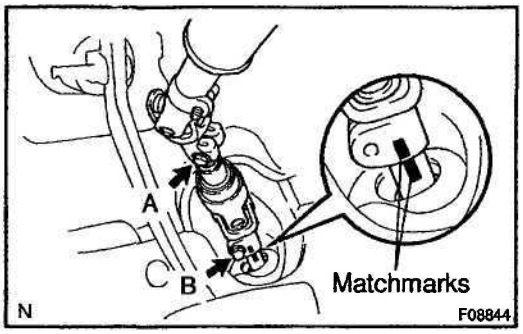

6. CONNECT NO. 2 INTERMEDIATE SHAFT ASSEMBLY

(a) Align the matchmarks on the No. 2 intermediate shaft assembly and intermediate extension.

(b) Install the bolt B.
Torque: 35 N·m (360 kgf·cm, 26 ft·lbf)

(c) Torque the bolt A.
Torque: 35 N·m (360 kgf·cm, 26 ft·lbf)

7. INSTALL COLUMN HOLE COVER SILENCER SHEET

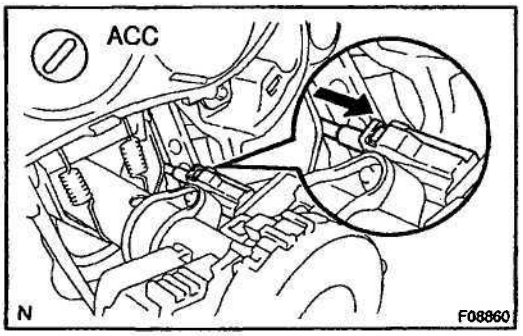

8. A/T:
INSTALL KEY INTERLOCK CABLE

With the key in ACC, push into the key interlock cable and install it.

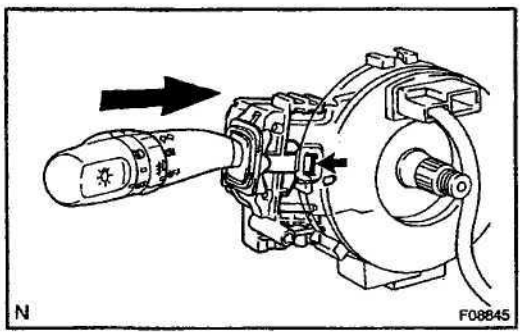

9. **INSTALL LIGHT CONTROL SWITCH AND HEADLIGHT DIMMER SWITCH, WIPER AND WASHER SWITCH AND SPIRAL CABLE**

(a) Install the spiral cable.

(b) Push into the light control switch and headlight dimmer switch until the claw is latched.

(c) Employ the same manner described above to the wiper and washer switch.

(d) Connect the airbag connector to the spiral cable.

(e) Connect the 3 connectors to the spiral cable, light control switch and headlight dimmer switch and wiper and washer switch.

10. INSTALL COLUMN UPPER AND LOWER COVERS

Install the column upper and lower covers with the 3 screws.

11. INSTALL INSTRUMENT CLUSTER FINISH PANEL

Install the instrument cluster finish panel with the 2 screws.

12. INSTALL INSTRUMENT FINISH PANEL

Install the instrument finish panel with the 2 bolts.

13. INSTALL LOWER NO. 1 INSTRUMENT FINISH PANEL

(a) Connect the connector .

(b) Install the lower No. 1 instrument finish panel with the 2 bolts.

(c) Connect the hood lock release lever and install the 2 screws.

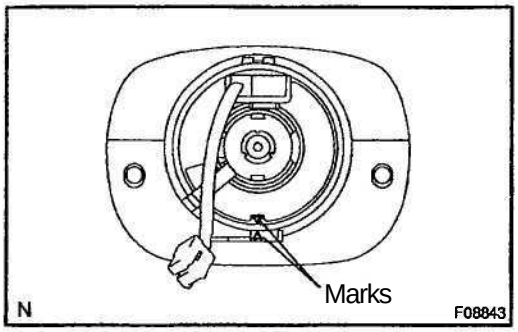

14. CENTER SPIRAL CABLE

(a) Check that the front wheels are facing straight ahead.

(b) Turn the cable counterclockwise by hand until it becomes harder to turn.

(c) Then rotate the cable clockwise about 2.5 turns to align the marks.

HINT:

The cable will rotate about 2.5 turns to either left or right of the center.

15. INSTALL STEERING WHEEL

(a) Align the matchmarks on the steering wheel and main shaft assembly.

(b) Install the steering wheel set nut.

Torque: 34 N·m (350 kgf·cm, 25 ft·lbf)

(c) Connect the connector.

16. INSTALL STEERING WHEEL PAD

NOTICE:

- **Never use airbag parts from another vehicle. When replacing parts, replace with new ones.**
- **Make sure the wheel pad is installed with the specified torque.**
- **If the wheel pad has been dropped, or there are cracks, dents or other defects in the case or connector, replace the wheel pad with a new one.**
- **When installing the wheel pad, take care that the wirings do not interfere with other parts and that they are not pinched between other parts.**

(a) Connect the airbag connector.

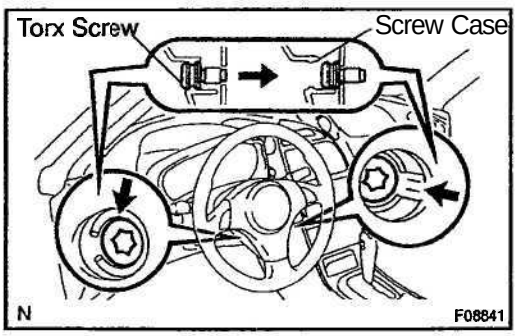

(b) Install the steering wheel pad after confirming that the circumference groove of the torx screws is caught on the screw case.

(c) Using a torx socket wrench, torque the 2 screws.

Torque: 8.8 N·m (90 kgf·cm, 78 in.·lbf)

17. CHECK STEERING WHEEL CENTER POINT

POWER STEERING VANE PUMP

COMPONENTS

SR0YO-01

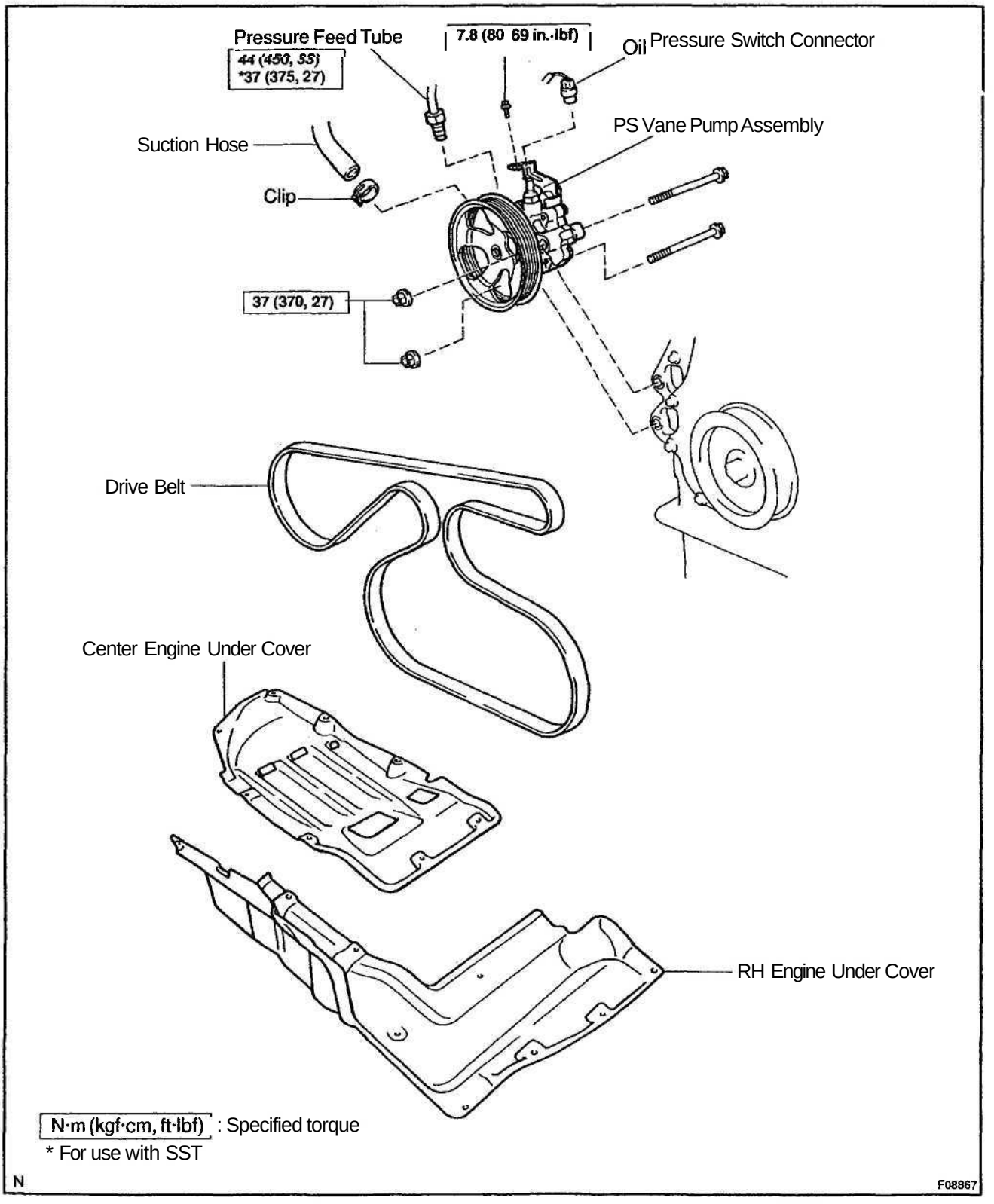

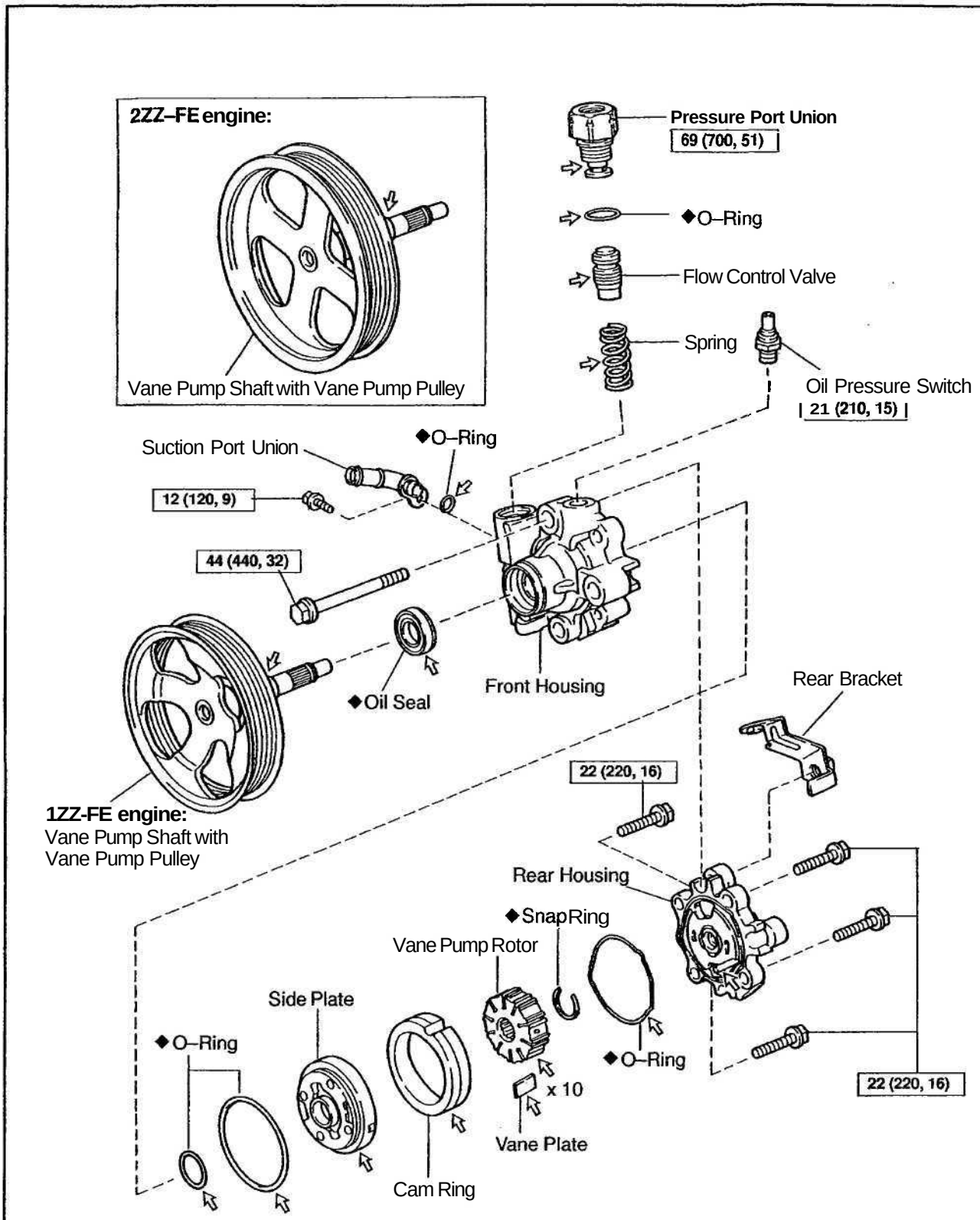

[N·m (kgf·cm, ft-lbf)] : Specified torque
• Non–reusable part
⇦ Power steering fluid

N

F09872

SR0YP-01

REMOVAL

1. REMOVE RH AND CENTER ENGINE UNDER COVERS

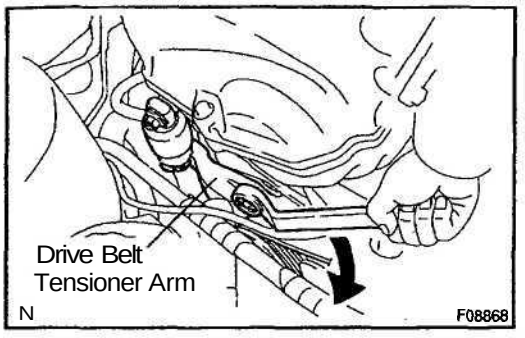

2. REMOVE DRIVE BELT

Loosen the drive belt tension by turning the drive belt tensioner arm clockwise, and remove the drive belt.

3. DISCONNECT SUCTION HOSE

Remove the clip and disconnect the suction hose.

NOTICE:

Take care not to spill fluid on the drive belt.

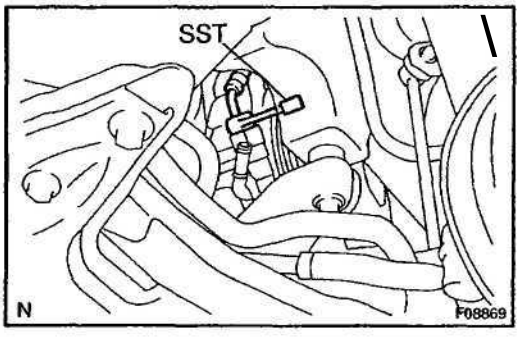

4. DISCONNECT PRESSURE FEED TUBE

(a) Using SST, disconnect the pressure feed tube.
SST 09631-22020

(b) Remove the bolt and disconnect the pressure feed tube clamp.

5. DISCONNECT OIL PRESSURE SWITCH CONNECTOR

6. REMOVE PS VANE PUMP ASSEMBLY

Remove the 2 pump assembly set bolts, nuts and PS vane pump assembly.

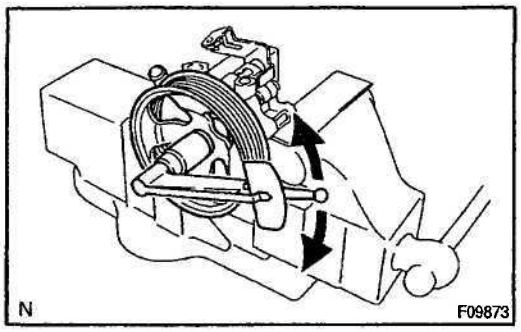

SR0VS-02

DISASSEMBLY

NOTICE:

When using a vise, do not overtighten it.

1. MEASURE PS VANE PUMP ROTATING TORQUE

(a) Check that the pump rotates smoothly without abnormal noise.

(b) Using a torque wrench, check the pump rotating torque.

Rotating torque:

0.27 N·m (2.8 kgf·cm, 2.4 in.·lbf) or less

2. REMOVE SUCTION PORT UNION

(a) Remove the bolt and suction port union.

(b) Remove the O–ring from the suction port union.

3. REMOVE PRESSURE PORT UNION, FLOW CONTROL VALVE AND SPRING

(a) Remove the pressure port union, flow control valve and spring.

(b) Remove the O–ring from the pressure port union.

4. REMOVE OIL PRESSURE SWITCH

NOTICE:

Be careful not to drop the oil pressure switch.

If the oil pressure switch is dropped or strongly damaged, replace it with a new one.

5. REMOVE REAR HOUSING

(a) Remove the bolt and rear bracket.

(b) Remove the 4 bolts and rear housing.

(c) Remove the O–ring from the rear housing.

6. REMOVE CAM RING, 10 VANE PLATES, VANE PUMP ROTOR AND SIDE PLATE

(a) Remove the cam ring and 10 vane plates.

NOTICE:

Take care not to drop the vane plate.

(b) Using a screwdriver, remove the snap ring, vane pump rotor and side plate.

(c) Remove the 2 O–rings from the side plate.

7. REMOVE VANE PUMP SHAFT WITH VANE PUMP PULLEY

SR0VT-02

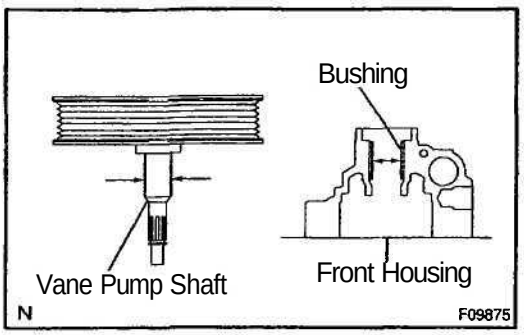

INSPECTION

1. MEASURE OIL CLEARANCE BETWEEN VANE PUMP SHAFT AND BUSHING

Using a micrometer and a caliper gauge, measure the oil clearance.

Standard clearance:
0.021 - 0.043 mm (0.0008 - 0.0017 In.)
Maximum clearance: 0.07 mm (0.0028 in.)

If it is more than the maximum, replace the front housing and vane pump shaft.

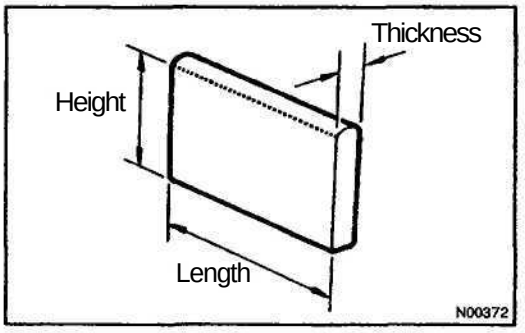

2. INSPECT VANE PUMP ROTOR AND VANE PLATES

(a) Using a micrometer, measure the height, thickness and length of the 10 vane plates.

Minimum height: 7.6 mm (0.299 in.)
Minimum thickness: 1.405 mm (0.0553 in.)
Minimum length: 11.993 mm (0.4722 in.)

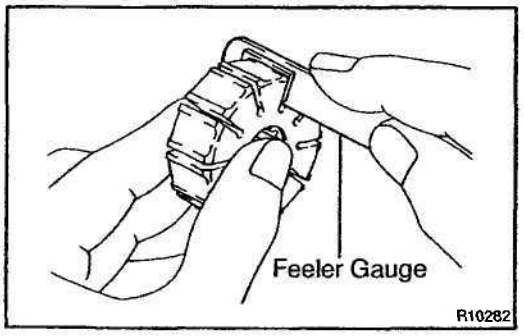

(b) Using a feeler gauge, measure the clearance between the vane pump rotor groove and vane plate.

Maximum clearance: 0.03 mm (0.0012 in.)

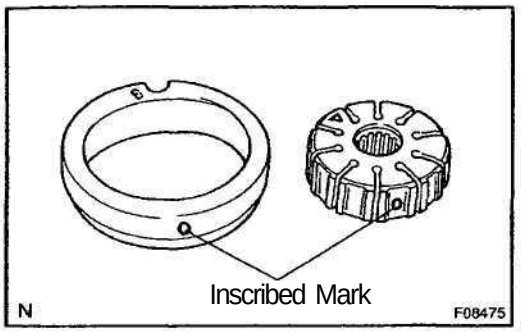

If it is more than the maximum, replace the vane plate and/or vane pump rotor with the one having the same mark stamped on the cam ring.

Inscribed mark: 0, 1, 2, 3, or 4

HINT:

There are 5 vane plate lengths corresponding to the following vane pump rotor and cam ring marks:

Vane pump rotor and cam ring mark	Vane plate part number	Vane plate length mm (in.)
0	44345 – 32100	12.001 – 12.003 (0.47248-0.47256)
1	44345 – 32110	11.999 – 12.001 (0.47240-0.47248)
2	44345- 32120	11.997 – 11.999 (0.47232 – 0.47240)
3	44345-32130	11.995 – 11.997 (0.47224-0.47232)
4	44345 – 32140	11.993 – 11.995 (0.47216 – 0.47224)

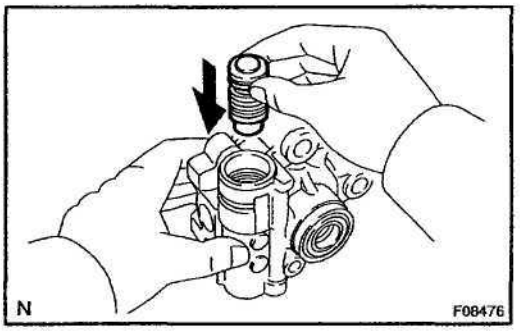

3. INSPECT FLOW CONTROL VALVE

(a) Coat the flow control valve with power steering fluid and check that it falls smoothly into the valve hole of the front housing by its own weight.

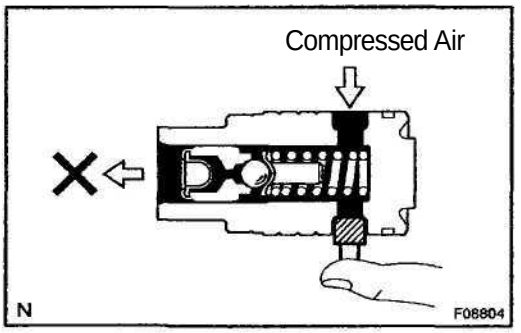

(b) Check the flow control valve for leakage. Close one of the holes and apply compressed air of 392 - 490 kPa (4 – 5 kgf/cm^2, 57 – 71 psi) into the opposite side hole, and confirm that air does not come out from the end hole.

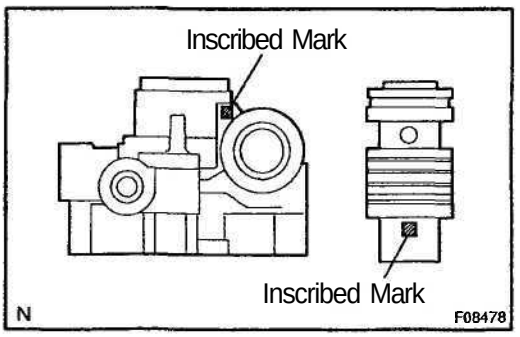

If necessary, replace the flow control valve with the one having the same letter as inscribed on the front housing.

Inscribed mark: A, B, C, D, E or F

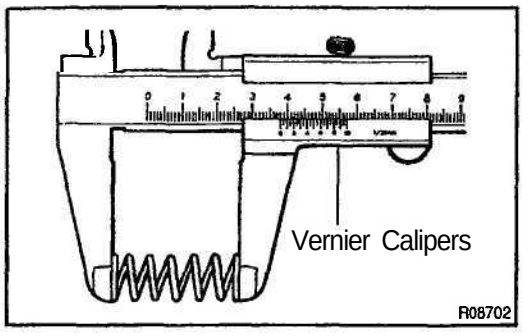

4. INSPECT SPRING

Using vernier calipers, measure the free length of the spring.

Minimum free length: 35.8 mm (1.409 in.)

If it is not within the specification, replace the spring.

5R0VU-02

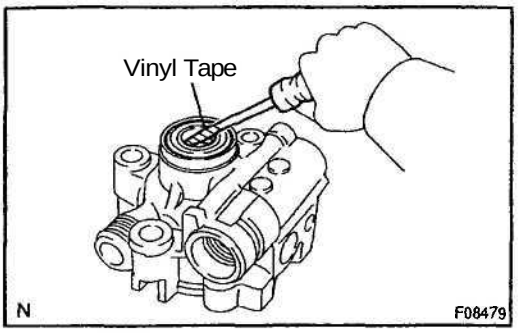

REPLACEMENT

NOTICE:

When using a vise, do not overtighten it.

IF NECESSARY, REPLACE OIL SEAL

(a) Using a screwdriver with vinyl tape wound around its tip, remove the oil seal.

NOTICE:

Be careful not to damage the bushing of the front housing.

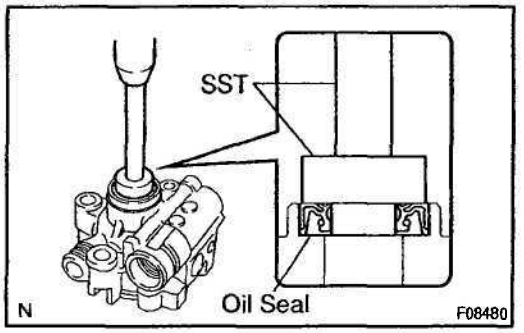

(b) Coat a new oil seal lip with power steering fluid.

(c) Using SST, press in the oil seal.

SST 09950–60010 (09951–00280), 09950–70010 (09951–07100)

NOTICE:

Make sure that the oil seal is installed facing in the correct direction.

REASSEMBLY

NOTICE:

When using a vise, do not overtighten it.

1. **COAT PARTS INDICATED BY ARROWS WITH POWER STEERING FLUID (See page SR-22)**
2. **INSTALL VANE PUMP SHAFT WITH VANE PUMP PULLEY**

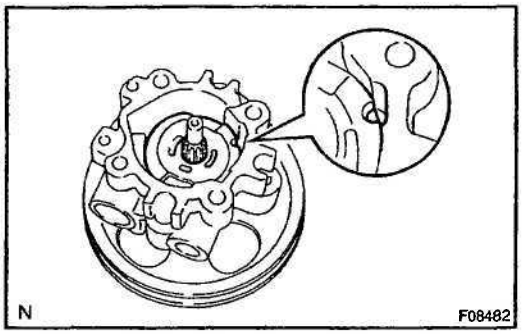

3. **INSTALL SIDE PLATE**

(a) Coat 2 new O–rings with power steering fluid, and install them to the side plate.

(b) Align the dent of the side plate with the dent of the front housing, and install the side plate.

NOTICE:

Make sure that the side plate is installed facing in the correct direction.

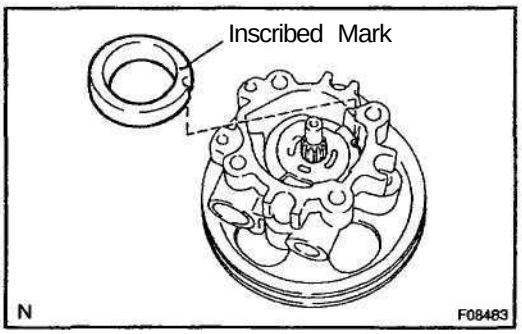

4. **INSTALL CAM RING**

Align the dent of the cam ring with the dent of the side plate, and install the cam ring with the inscribed mark facing outward.

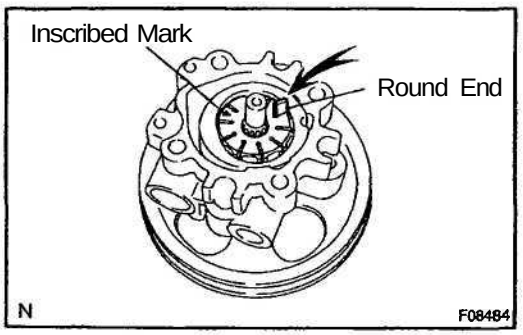

5. **INSTALL VANE PUMP ROTOR**

(a) Install the vane pump rotor with the inscribed mark facing outward.

(b) Install a new snap ring to the vane pump shaft.

6. **INSTALL 10 VANE PLATES**

Install the 10 vane plates with the round end facing outward.

7. **INSTALL REAR HOUSING**

(a) Coat a new O–ring with power steering fluid, and install it to the rear housing.

(b) Align the straight pin of the rear housing with the dents of the cam ring, side plate and front housing, and install the rear housing with the 4 bolts.

Torque: 22 N·m (220 kgf·cm, 16 ft·lbf)

(c) Install the rear bracket with the bolt.

Torque: 44 N·m (440 kgf·cm, 32 ft·lbf)

8. **INSTALL OIL PRESSURE SWITCH**

Torque: 21 N·m (210 kgf·cm, 15 ft·lbf)

9. INSTALL SPRING, FLOW CONTROL VALVE AND PRESSURE PORT UNION

(a) Install the spring.

(b) Install the flow control valve facing in the correct direction (See page SR–22).

(c) Coat a new O–ring with power steering fluid, and install it to the pressure port union.

(d) Install the pressure port union.

Torque: 69 N·m (700 kgf·cm, 51 ft·lbf)

10. INSTALL SUCTION PORT UNION

(a) Coat a new O–ring with power steering fluid, and install it to the suction port union.

(b) Install the suction port union with the bolt.

Torque: 12 N m (120 kgf·cm, 9 ft lbf)

11. MEASURE PS VANE PUMP ROTATING TORQUE (See page SR–25)

5R0YO–01

INSTALLATION

1. INSTALL PS VANE PUMP ASSEMBLY

Install the PS vane pump assembly with the 2 pump assembly set bolts and nuts.

Torque: 37 N·m (370 kgf·cm, 27 ft·lbf)

2. CONNECT OIL PRESSURE SWITCH CONNECTOR

NOTICE:

Be careful to prevent oil from being attached to the connector.

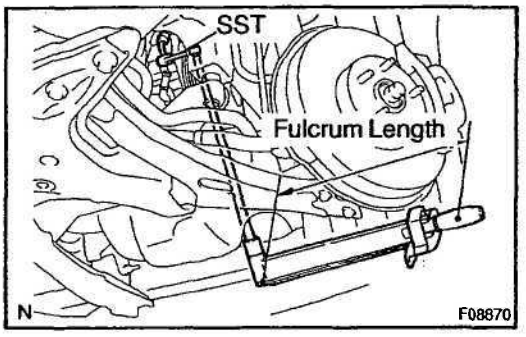

3. CONNECT PRESSURE FEED TUBE

(a) Connect the pressure feed tube clamp with the bolt.

Torque: 7.8 N·m (80 kgf·cm, 69 in.·lbf)

(b) Using SST, connect the pressure feed tube.

SST 09631-22020

Torque: 37 N·m (375 kgf·cm, 27 ft·lbf)

HINT:

- Use a torque wrench with a fulcrum length of 345 mm (11.81 in).
- This torque value is effective in case that SST is parallel to a torque wrench.

4. CONNECT SUCTION HOSE

Connect the suction hose with the clip.

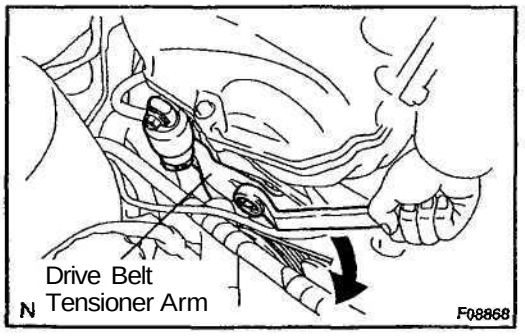

5. INSTALL DRIVE BELT

Loosen the drive belt tension by turning the drive belt tensioner arm clockwise, and install the drive belt.

6. INSTALL RH AND CENTER ENGINE UNDER COVERS

7. BLEED POWER STEERING SYSTEM

(See page SR–4)

POWER STEERING GEAR

COMPONENTS

SR0YX–01

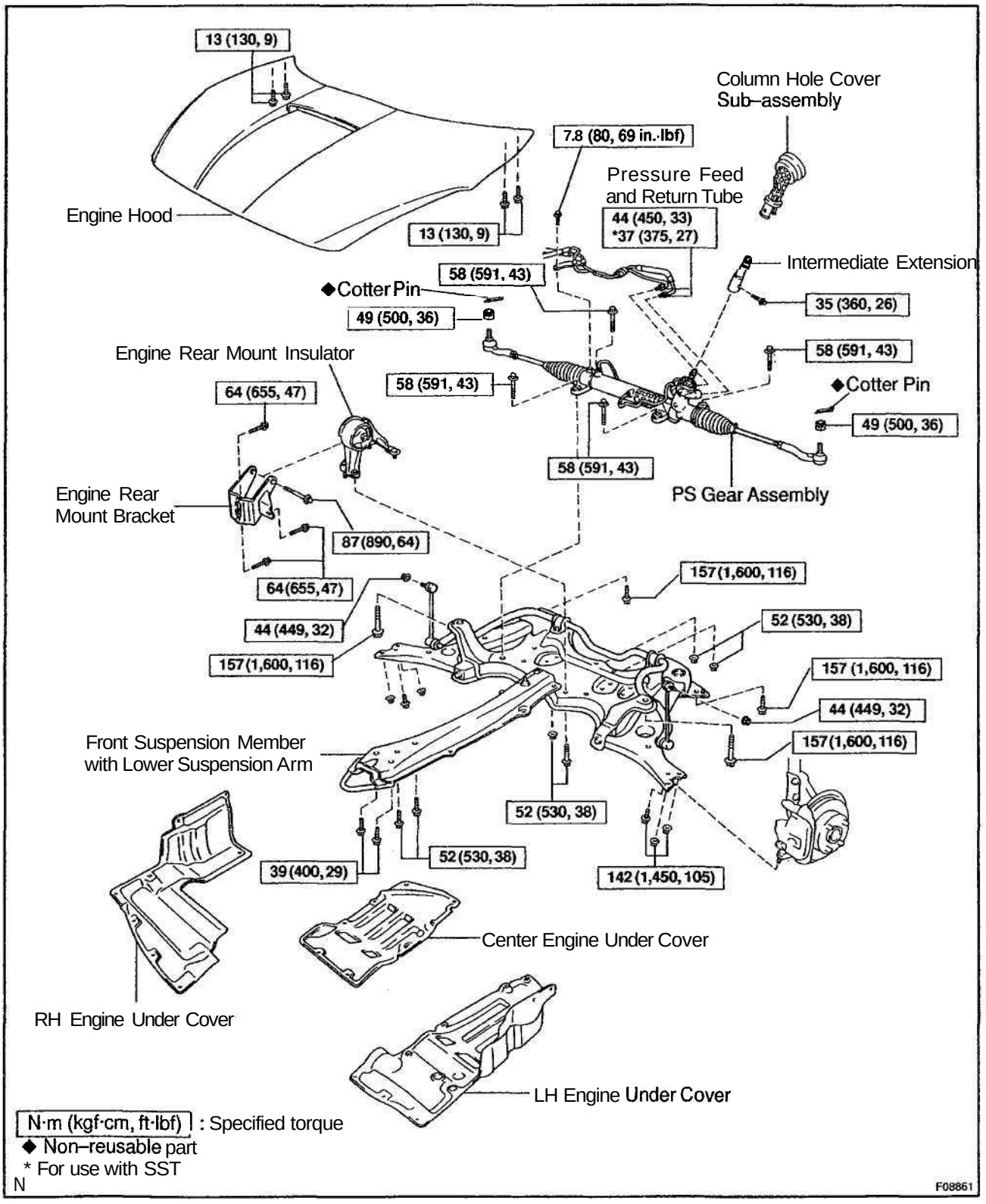

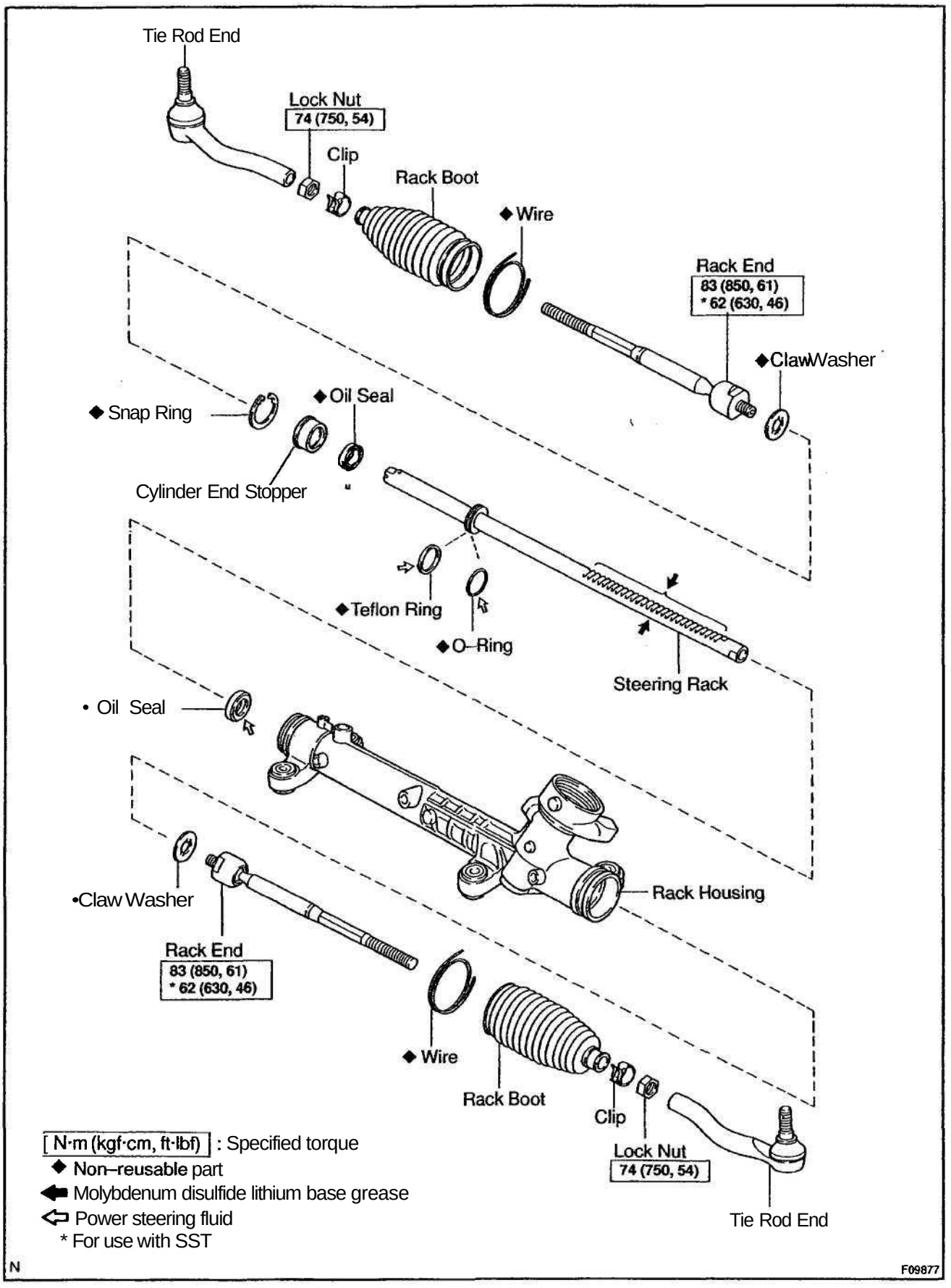
Tie Rod End
Lock Nut
74 (750, 54)
Clip
Rack Boot
◆Wire
Rack End
83 (850, 61)
* 62 (630, 46)
◆ClawWasher
◆ Snap Ring
◆Oil Seal
Cylinder End Stopper
◆Teflon Ring
◆O–Ring
Steering Rack
• Oil Seal
Rack Housing
•Claw Washer
Rack End
83 (850, 61)
* 62 (630, 46)
◆ Wire
Rack Boot
Clip
Lock Nut
74 (750, 54)
Tie Rod End
[N·m (kgf·cm, ft·lbf)] : Specified torque
◆ Non–reusable part
Molybdenum disulfide lithium base grease
Power steering fluid
* For use with SST
N
F09877

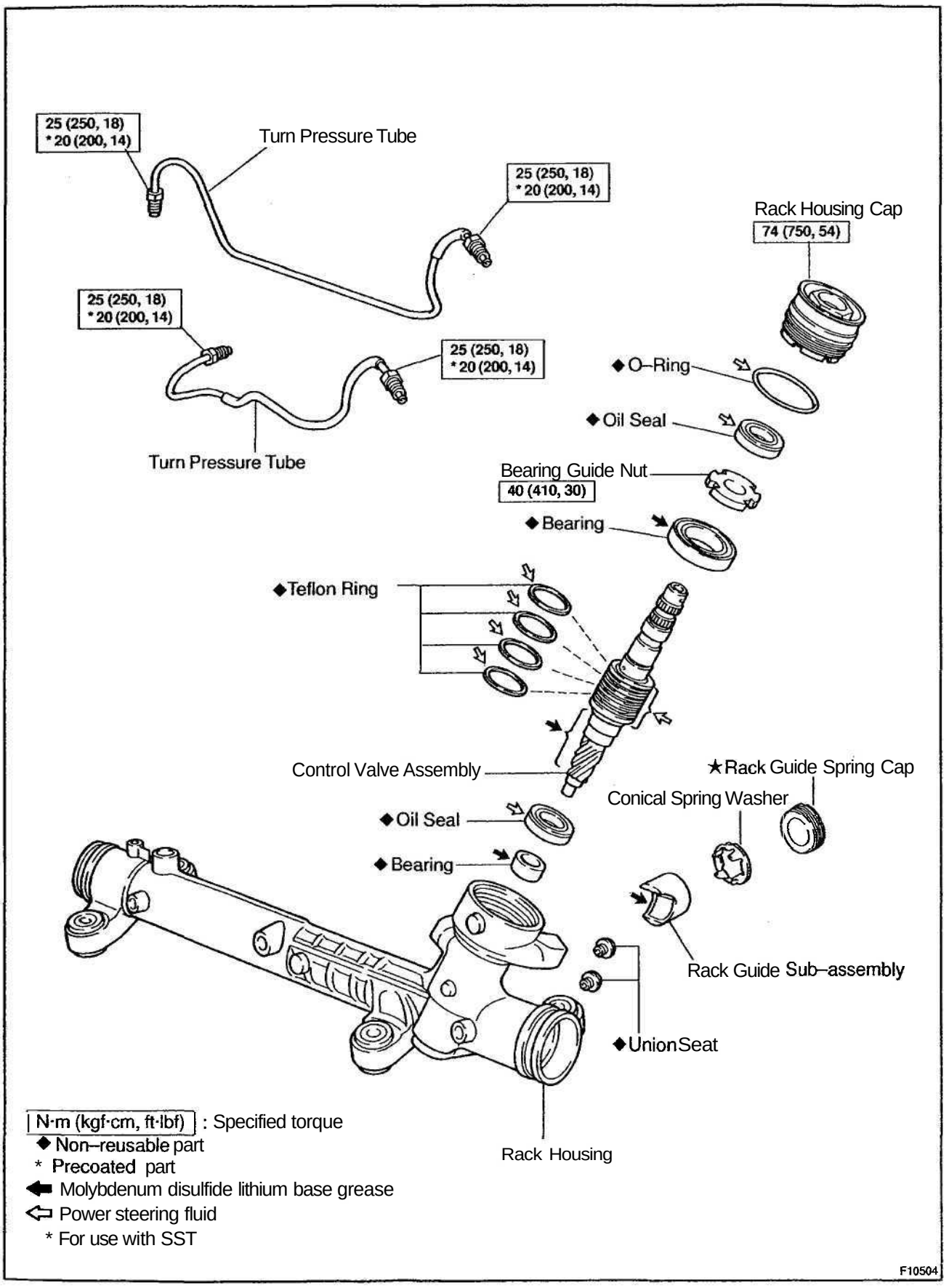
25 (250, 18)
*20 (200, 14)
Turn Pressure Tube
25 (250, 18)
*20 (200, 14)
Rack Housing Cap
74 (750, 54)
25 (250, 18)
*20 (200, 14)
25 (250, 18)
*20 (200, 14)
◆O–Ring
◆Oil Seal
Turn Pressure Tube
Bearing Guide Nut
40 (410, 30)
◆Bearing
◆Teflon Ring
Control Valve Assembly
★Rack Guide Spring Cap
Conical Spring Washer
◆Oil Seal
◆Bearing
Rack Guide Sub–assembly
◆Union Seat
Rack Housing
N·m (kgf·cm, ft·lbf) : Specified torque
◆ Non–reusable part
* Precoated part
Molybdenum disulfide lithium base grease
Power steering fluid
* For use with SST
F10504

SR0YR-01

REMOVAL

NOTICE:

Remove the steering wheel assembly before the steering gear removal, because there is possibility of breaking of the spiral cable.

1. **PLACE FRONT WHEELS FACING STRAIGHT AHEAD**
2. **REMOVE STEERING WHEEL PAD (See page SR–11)**
3. **REMOVE STEERING WHEEL (See page SR–11)**
4. **REMOVE RH, CENTER AND LH ENGINE UNDER COVERS**
5. **DISCONNECT RH AND LH TIE ROD ENDS (See page SA–12)**
6. **DISCONNECT NO. 2 INTERMEDIATE SHAFT ASSEMBLY (See page SR–11)**

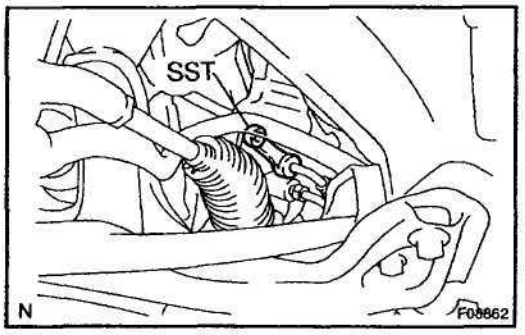

7. **DISCONNECT PRESSURE FEED AND RETURN TUBES**

Using SST, disconnect the pressure feed and return tubes.

SST 09631-22020

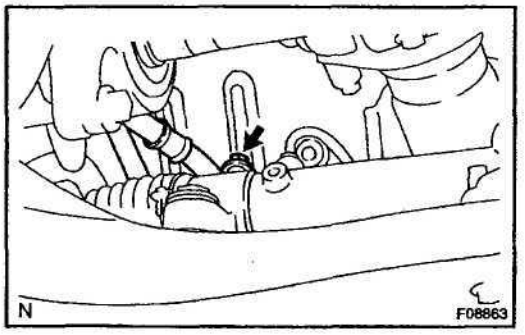

8. **DISCONNECT TUBE CLAMP**

Remove the bolt and disconnect the tube clamp.

9. **DISCONNECT COLUMN HOLE COVER SUB-ASSEMBLY**
10. **REMOVE ENGINE HOOD (See page BO–9)**

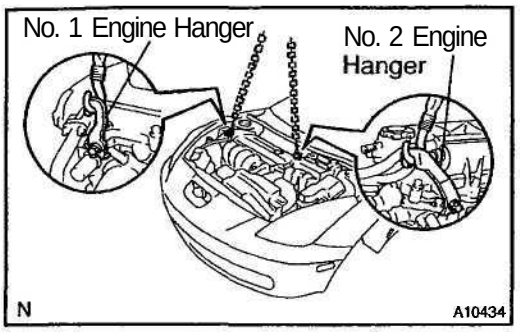

11. ATTACH ENGINE SLING DEVICE TO ENGINE HANGERS

(a) Remove the 4 bolts and No. 2 cylinder head cover.

(b) Disconnect the PCV hoses from the cylinder head cover.

(c) Install the No. 1 and No. 2 engine hangers in the correct direction.

1ZZ-FE Engine:
Part No.:
No. 1 engine hanger: 12281-22021
No. 2 engine hanger: 12281-15040 or 12281–15050
Bolt: 91512–B1016
Torque: 38 N·m (388 kgf·cm, 28 ft lbf)
2ZZ–FE Engine:
Part No.:
No. 1 engine hanger: 12281–88600
No. 2 engine hanger: 12282–88600
Bolt: 91512–61020
Torque: 38 N·m (388 kgf·cm, 28 ft·lbf)

(d) Attach the engine sling device to the engine hangers.

CAUTION:
Do not attempt to hang the engine by hooking the chain to any other part.

12. DISCONNECT LOWER BALL JOINT FROM LOWER SUSPENSION ARM (See page SA–42)

13. DISCONNECT STABILIZER BAR

(a) Remove the nut and disconnect the stabilizer bar.

(b) Employ the same manner described above to the other side.

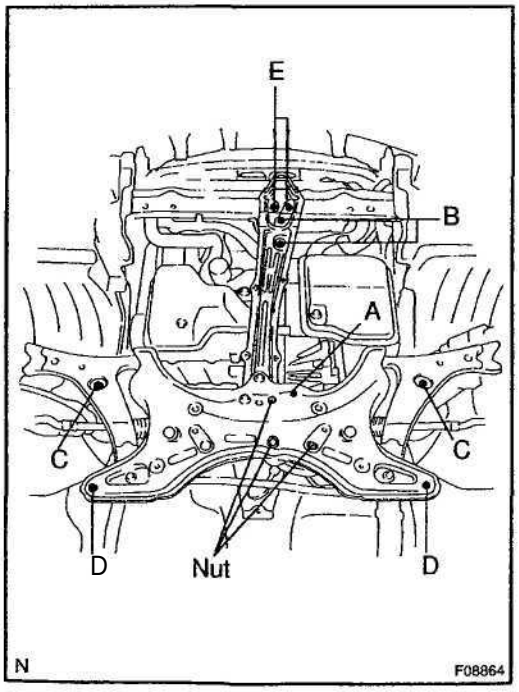

14. DISCONNECT ENGINE REAR MOUNT INSULATOR AND FRONT SUSPENSION MEMBER

Remove the bolt (bolt A) and 3 nuts, and disconnect the engine rear mount insulator and front suspension member.

15. DISCONNECT ENGINE FRONT MOUNT INSULATOR AND FRONT SUSPENSION MEMBER

Remove the 2 bolts (bolt B) and disconnect the engine front mount insulator and front suspension member.

16. SUPPORT FRONT SUSPENSION MEMBER WITH LOWER SUSPENSION ARM

Using a transmission jack, support the front suspension member with lower suspension arm.

17. REMOVE FRONT SUSPENSION MEMBER WITH LOWER SUSPENSION ARM AND PS GEAR ASSEMBLY

Remove the 6 bolts (bolt C, D and E) and front suspension member with lower suspension arm and PS gear assembly.

18. REMOVE PS GEAR ASSEMBLY

(a) Remove the 4 bolts and PS gear assembly from the front suspension member.

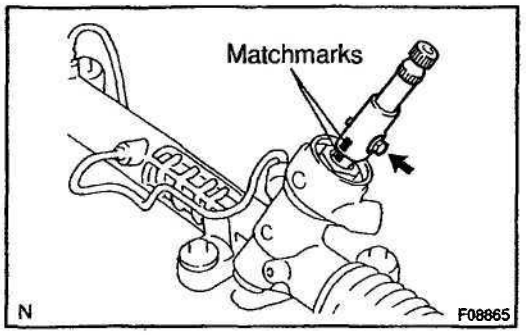

(b) Place matchmarks on the intermediate extension and control valve shaft.

(c) Remove the bolt and intermediate extension.

19. REMOVE ENGINE REAR MOUNT INSULATOR AND ENGINE REAR MOUNT BRACKET

(a) Remove the through bolt and engine rear mount insulator.

(b) Remove the 3 bolts and engine rear mount bracket.

SROYS-01

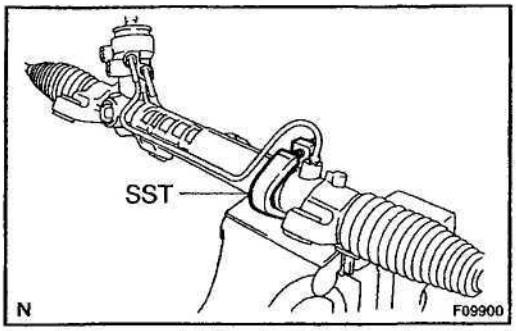

DISASSEMBLY

NOTICE:

When using a vise, do not overtighten it.

1. SECURE PS GEAR ASSEMBLY IN VISE

Using SST, secure the PS gear assembly in a vise.

SST 09612–00012

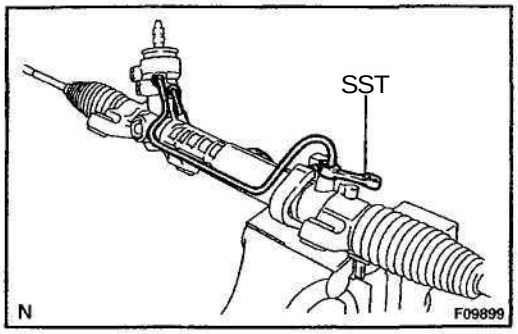

2. REMOVE 2 TURN PRESSURE TUBES

Using SST, remove the 2 turn pressure tubes.

SST 09633–00020

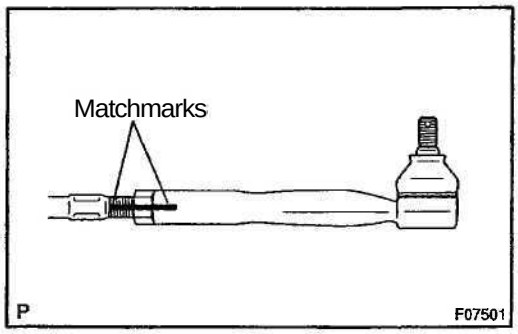

3. REMOVE RH AND LH TIE ROD ENDS AND LOCK NUTS

(a) Place matchmarks on the tie rod end and rack end.

(b) Loosen the lock nut, and remove the tie rod end and lock nut.

(c) Employ the same manner described above to the other side.

4. REMOVE RH AND LH CLIPS, WIRES AND RACK BOOTS

(a) Using needle nose pliers, loosen the wire.

(b) Remove the clip, wire and rack boot.

NOTICE:

Be careful not to damage the boot.

HINT:

Mark the RH and LH rack boots.

(c) Employ the same manner described above to the other side.

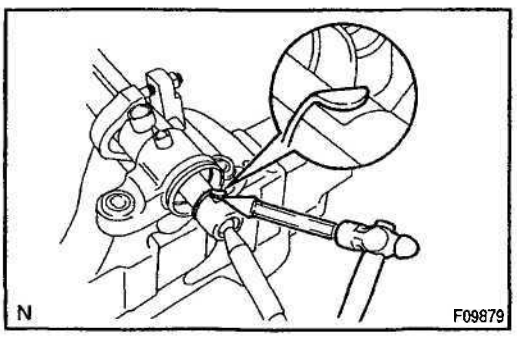

5. REMOVE RH AND LH RACK ENDS AND CLAW WASHERS

(a) Using a chisel and a hammer, unstake the washer.

NOTICE:

Avoid any impact on the steering rack.

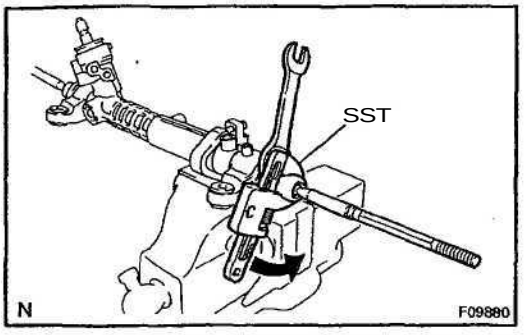

(b) Using a spanner, hold the steering rack steadily and using SST, remove the rack end.
SST 09922-10010

NOTICE:

Use SST 09922-10010 in the direction shown in the illustration.

HINT:

Mark the RH and LH rack ends.

(c) Remove the claw washer.

(d) Employ the same manner described above to the other side.

6. REMOVE RACK GUIDE SPRING CAP, CONICAL SPRING WASHER AND RACK GUIDE SUB-ASSEMBLY

7. REMOVE RACK HOUSING CAP

(a) Remove the rack housing cap.

(b) Remove the O-ring from the rack housing cap.

8. REMOVE CONTROL VALVE ASSEMBLY

Pull out the control valve assembly.

NOTICE:

Be careful not to damage the oil seal lip.

9. REMOVE CYLINDER END STOPPER

(a) Using snap ring pliers, remove the snap ring.

(b) Pull out the cylinder end stopper.

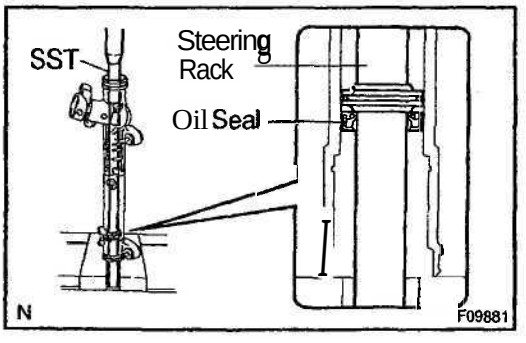

10. REMOVE STEERING RACK AND OIL SEAL

Using SST, press out the steering rack and oil seal.
SST 09950-70010 (09951-07200)

NOTICE:

Take care not to drop the steering rack.

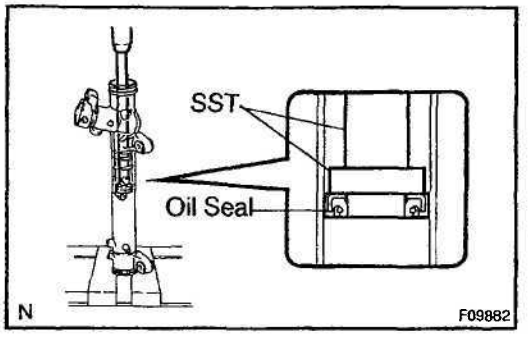

11. REMOVE OIL SEAL

Using SST, press out the oil seal.
SST 09950-60010 (09951-00280),
09950-70010 (09951-07360)

NOTICE:

Do not damage the rack housing.

SR0YT-01

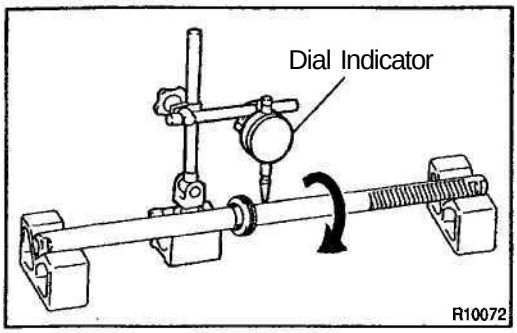

INSPECTION

NOTICE:

When using a vise, do not overtighten it.

INSPECT STEERING RACK

(a) Using a dial indicator, check the rack for runout, teeth wear and damage.

Maximum runout: 0.1 mm (0.004 in.)

(b) Check the back surface for wear and damage.

SR0YU-01

REPLACEMENT

NOTICE:

When using a vise, do not overtighten it.

1. IF NECESSARY, REPLACE BEARING

(a) Using SST, remove the bearing guide nut and bearing.
SST 09617-35020

(b) Coat a new bearing with molybdenum disulfide lithium base grease.

(c) Install the bearing and using SST, install the bearing guide nut.
SST 09617-35020
Torque: 40 N m (410 kgf·cm, 30 ft·lbf)

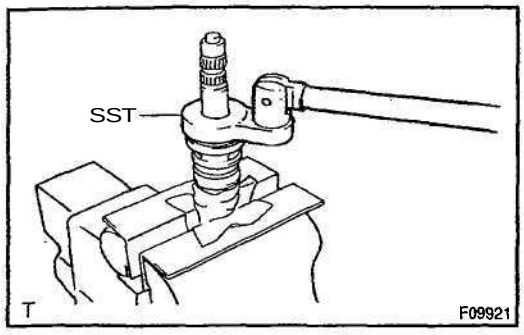

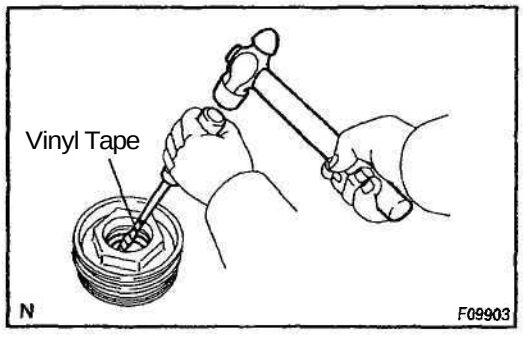

2. IF NECESSARY, REPLACE OIL SEAL

(a) Using a screwdriver with vinyl tape wound around its tip, remove the oil seal.

NOTICE:

Be careful not to damage the rack housing cap.

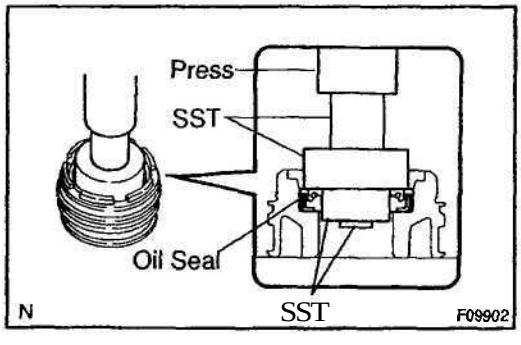

(b) Coat a new oil seal lip with power steering fluid.

(c) Using SST, press in the oil seal.
SST 09950–60010 (09951–00210, 09951–00340, 09952–06010), 09950–70010 (09951–07100)

NOTICE:

Make sure that the oil seal is installed facing in the correct direction.

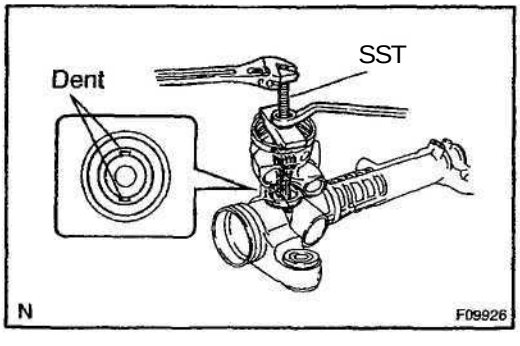

3. IF NECESSARY, REPLACE OIL SEAL

(a) Using SST, remove the oil seal.
SST 09612-20010

NOTICE:

Be careful not to damage the rack housing.

(b) Coat a new oil seal lip with power steering fluid.

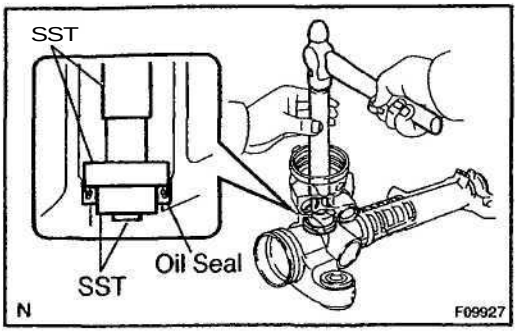

(c) Using SST and a hammer, tap in the oil seal.
SST 09950-60010 (09951-00240, 09951-00350, 09952–06010), 09950–70010 (09951–07150)

NOTICE:
Make sure that the oil seal is installed facing in the correct direction.

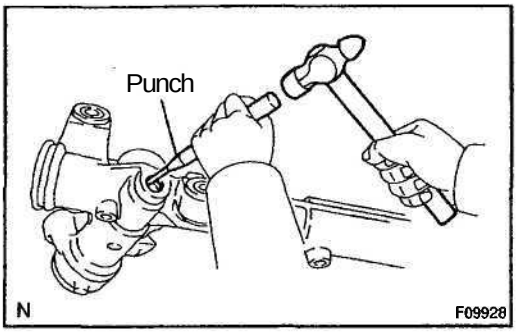

4. IF NECESSARY, REPLACE BEARING

(a) Using a punch and a hammer, tap out the bearing.

(b) Coat a new bearing with molybdenum disulfide lithium base grease.

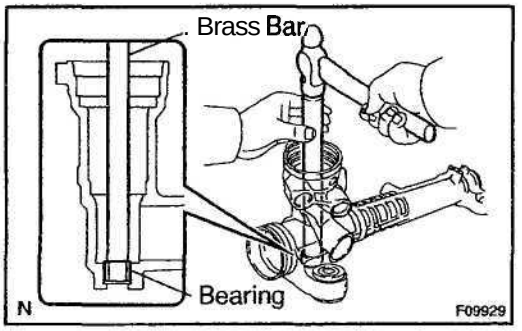

(c) Using a brass bar and a hammer, tap in the bearing.

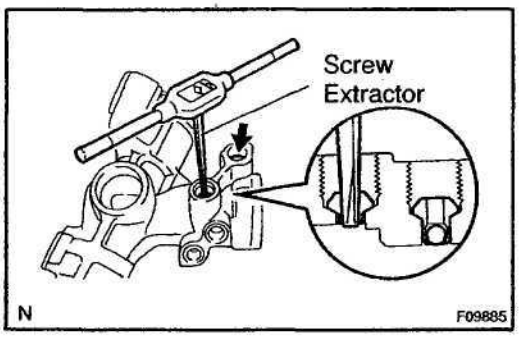

5. IF NECESSARY, REPLACE 2 UNION SEATS

(a) Using a screw extractor, remove the union seat from the rack housing.

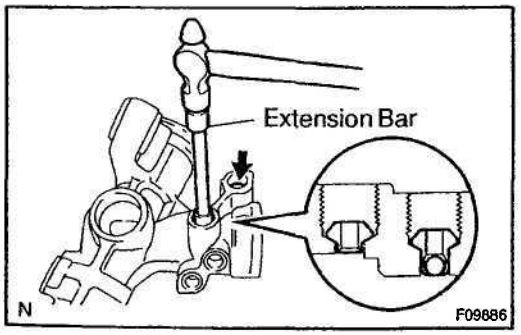

(b) Using a hammer and an extension bar, lightly tap in a new union seat.

NOTICE:
Before installing the union seat, remove the dust sticking to the rack housing.

(c) Employ the same manner described above to the other side.

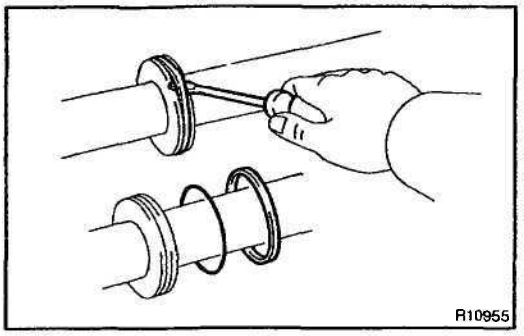

6. IF NECESSARY, REPLACE TEFLON RING AND O–RING

(a) Using a screwdriver, remove the teflon ring and O–ring from the steering rack.

NOTICE:

Be careful not to damage the groove for the teflon ring.

(b) Coat a new O–ring with power steering fluid and install it to the steering rack.

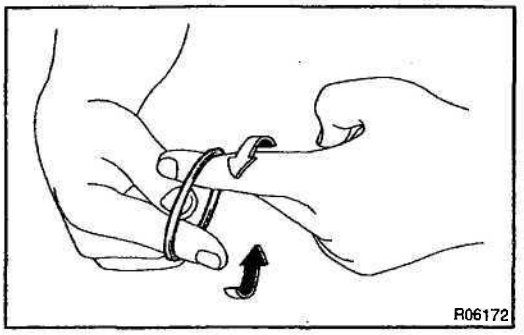

(c) Expand a new teflon ring with your fingers.

NOTICE:

Be careful not to overexpand the teflon ring.

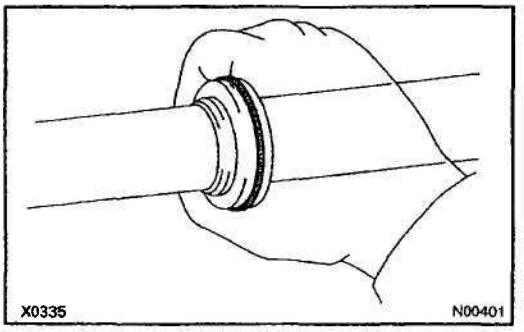

(d) Coat the teflon ring with power steering fluid.

(e) Install the teflon ring to the steering rack and settle it down with your fingers.

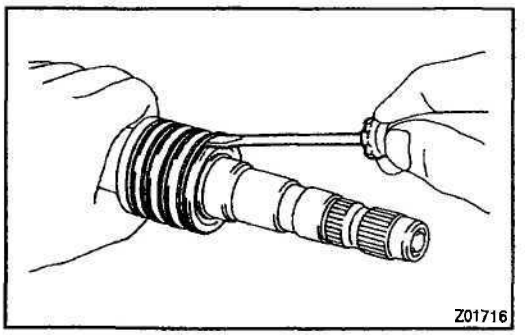

7. IF NECESSARY, REPLACE 4 TEFLON RINGS

(a) Using a screwdriver, remove the 4 teflon rings from the control valve assembly.

NOTICE:

Be careful not to damage the grooves for the teflon rings.

(b) Expand 4 new teflon rings with your fingers.

NOTICE:

Be careful not to overexpand the teflon ring.

(c) Coat the teflon rings with power steering fluid.

(d) Install the teflon rings to the control valve assembly and settle them down with your fingers.

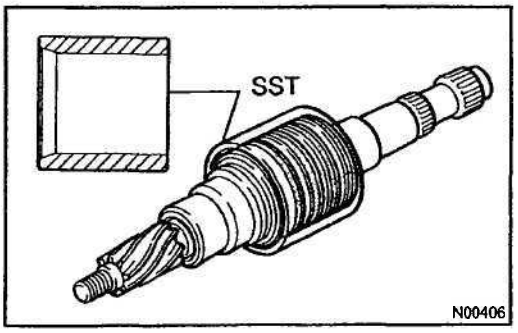

(e) Carefully slide the tapered end of SST over the teflon rings until they fit to the control valve assembly.
SST 09631-20081

NOTICE:

Be careful not to damage the teflon rings.

SR0YY-01

REASSEMBLY

NOTICE:

When using a vise, do not overtighten it.

1. COAT PARTS INDICATED BY ARROWS WITH POWER STEERING FLUID OR MOLYBDENUM DISULFIDE LITHIUM BASE GREASE (See page SR–33)

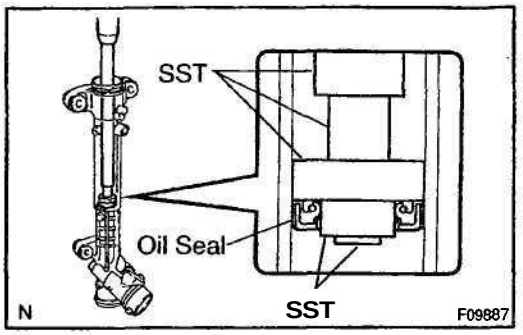

2. INSTALL OIL SEAL

(a) Coat a new oil seal lip with power steering fluid.

(b) Install the oil seal to SST, and press them into the rack housing.

SST 09950–60010 (09951–00240, 09951–00400, 09952–06010), 09950–70010 (09951–07360)

NOTICE:

- **Make sure that the oil seal is installed facing in the correct direction.**
- **Take care that the oil seal does not get reversed as you install it.**

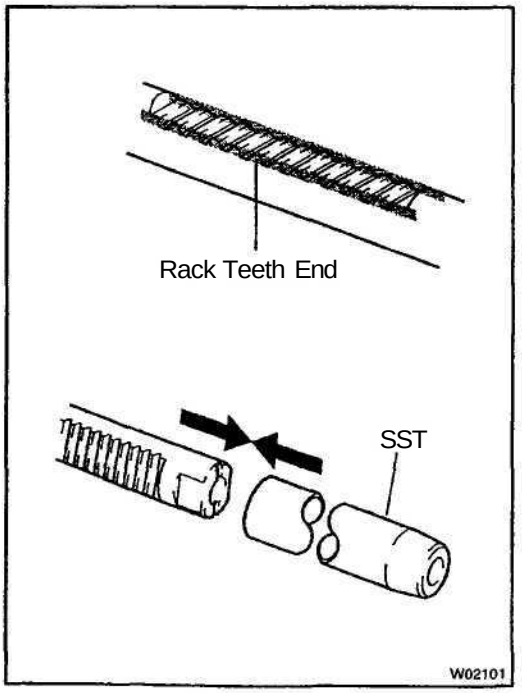

3. INSTALL STEERING RACK

(a) Install SST to the rack.

SST 09631-20051

HINT:

If necessary, scrape the burrs off the rack teeth end and burnish.

(b) Coat SST with power steering fluid.

(c) Install the steering rack into the rack housing.

(d) Remove the SST.

SST 09631-20051

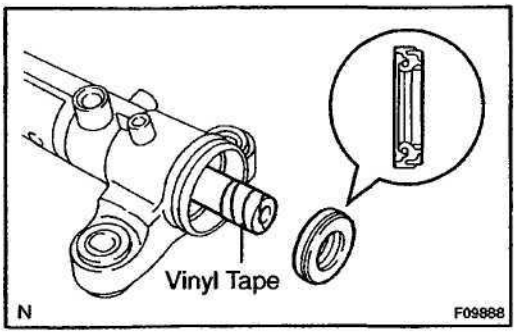

4. INSTALL OIL SEAL

(a) Coat a new oil seal lip with power steering fluid.

(b) To prevent oil seal lip damage, wind vinyl tape on the steering rack end, and apply power steering fluid.

(c) Install the oil seal by pushing it into the rack housing without tilting.

NOTICE:

- **Make sure that the oil seal is installed facing in the correct direction.**
- **Be careful not to damage the oil seal lip.**

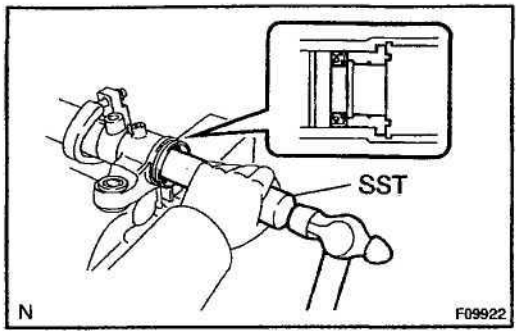

5. INSTALL CYLINDER END STOPPER

(a) Using SST and a hammer, drive in the cylinder end stopper.

SST 09612-22011

(b) Using snap ring pliers, install a new snap ring to the rack housing.

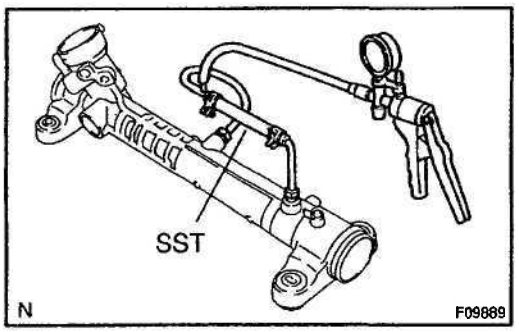

6. AIR TIGHTNESS TEST

(a) Install SST to the rack housing.

SST 09631-12071

(b) Apply 53 kPa (400 mmHg, 15.75 in.Hg) of vacuum for about 30 seconds.

(c) Check that there is no change in the vacuum.

If there is a change in the vacuum, check the installation of the oil seals.

7. INSTALL CONTROL VALVE ASSEMBLY

NOTICE:

Be careful not to damage the teflon rings and oil seal lips.

8. INSTALL RACK HOUSING CAP

(a) Coat a new O–ring with power steering fluid, and install it to the rack housing cap.

(b) Install the rack housing cap.

Torque: 74 N·m (750 kgf·cm, 54 ft·lbf)

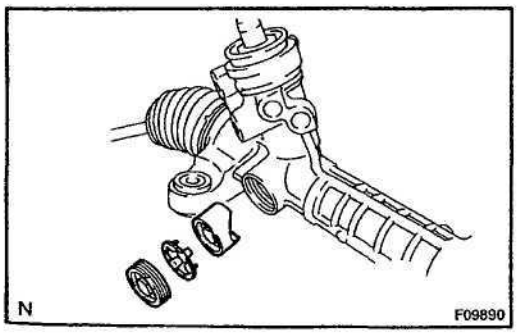

9. INSTALL RACK GUIDE SUB-ASSEMBLY, CONICAL SPRING WASHER AND RACK GUIDE SPRING CAP

(a) Install the rack guide sub–assembly and conical spring washer.

(b) Apply sealant to 2 or 3 threads of the rack guide spring cap.
Sealant:
Part No. 08833–00080, THREE BOND 1344, LOCTITE 242 or equivalent
(c) Temporarily install the rack guide spring cap.

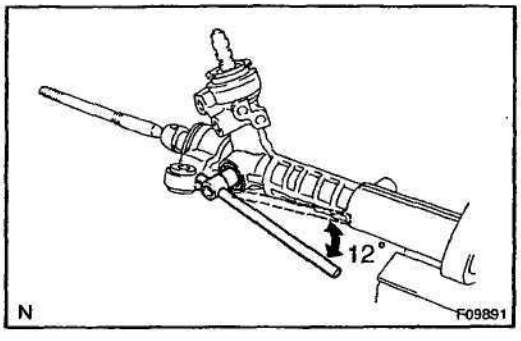

10. ADJUST TOTAL PRELOAD
(a) To prevent the steering rack teeth from damaging the oil seal lip, temporarily install the RH and LH rack ends.
(b) Torque the rack guide spring cap.
Torque: 25 N·m (250 kgf·cm, 18 ft·lbf)
(c) Return the rack guide spring cap 12°.

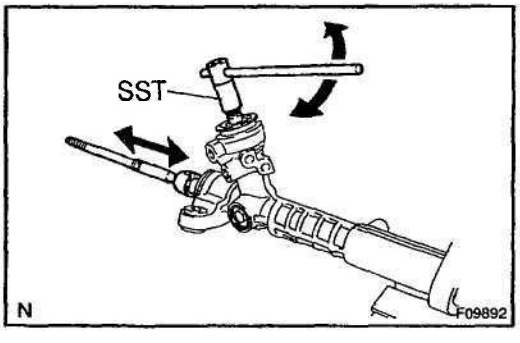

(d) Using SST, turn the control valve shaft right and left 1 or 2 times.
SST 09616–00010
(e) Loosen the rack guide spring cap until the rack guide spring is not functioning.

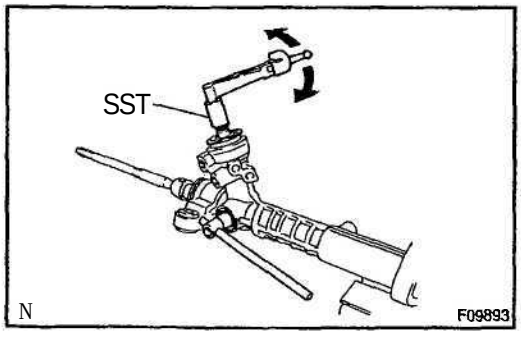

(f) Using SST and torque wrench, tighten the rack guide spring cap until the preload is within the specification.
SST 09616–00010
Preload (turning):
0.9 – 1.3 N·m (9 – 13 kgf·cm, 8.0 – 11.5 in.·lbf)

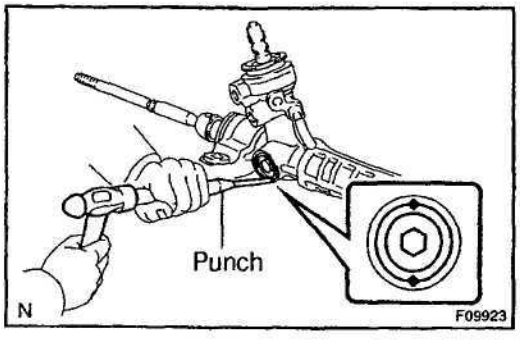

(g) Using a punch and a hammer, stake 2 parts in opposing positions on the rack guide spring cap.
(h) Recheck the total preload.
Preload (turning):
0.9 – 1.3 N·m (9 – 13 kgf·cm, 8.0 – 11.5 in.·lbf)
(i) Remove the RH and LH rack ends.

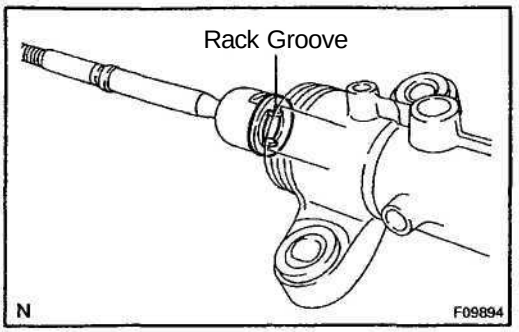

11. INSTALL RH AND LH CLAW WASHERS AND RACK ENDS

(a) Install a new claw washer, and temporarily install the rack end.

HINT:

Align the claws of the claw washer with the steering rack grooves.

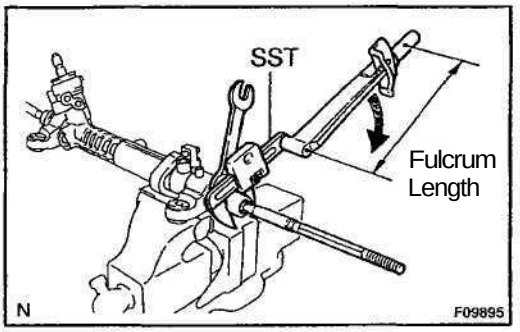

(b) Using a spanner, hold the steering rack steadily and using SST, torque the rack end.

SST 09922-10010

Torque: 62 N·m (630 kgf cm, 46 ft·lbf)

NOTICE:

Use SST 09922–10010 in the direction shown in the illustration.

HINT:

Use a torque wrench with a fulcrum length of 380 mm (14.96 in.).

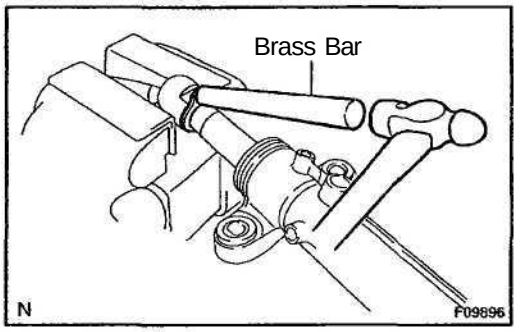

(c) Using a brass bar and a hammer, stake the washer.

NOTICE:

Avoid any impact on the steering rack.

(d) Employ the same manner described above to the other side.

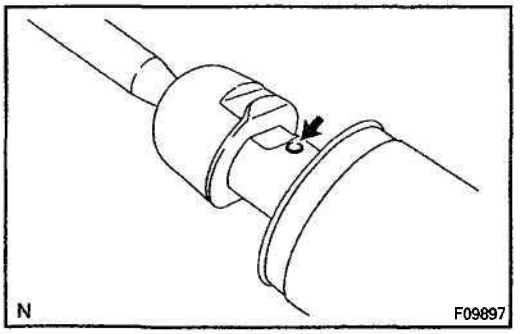

12. INSTALL RH AND LH RACK BOOTS, WIRES AND CLIPS

(a) Ensure that the steering rack hole is not clogged with grease.

HINT:

If the hole is clogged, the pressure inside the boot will change after it is assembled and the steering wheel is turned.

(b) Install the boot, clip and a new wire.

NOTICE:

Be careful not to damage or twist the boot.

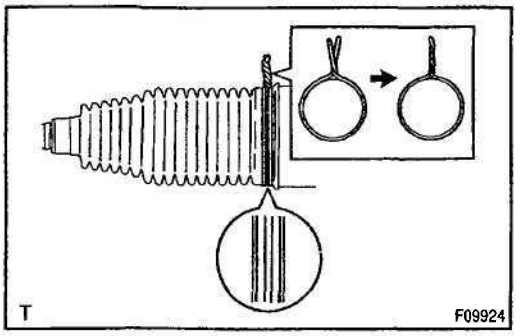

(c) After winding and tightening the wire around the circumference of the boot twice, twist it several times, and install it.

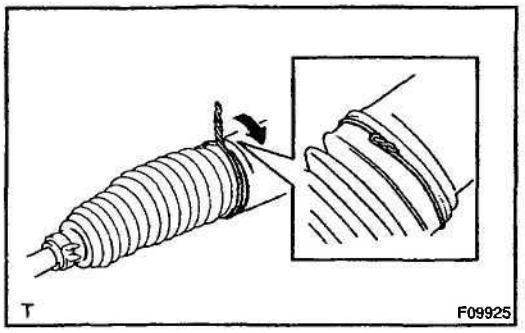

(d) As shown in the illustration, bend the wire to the circular direction to prevent damage to the boot.
(e) Employ the same manner described above to the other side.

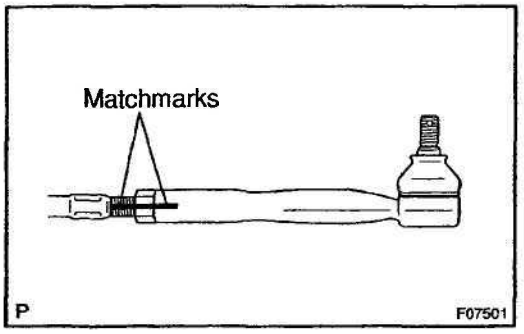

13. INSTALL RH AND LH TIE ROD ENDS AND LOCK NUTS

(a) Screw the lock nut and tie rod end onto the rack end until the matchmarks are aligned.
(b) After adjusting toe–in, torque the nut (See page SA–4).
Torque: 74 N·m (750 kgf·cm, 54 ft·lbf)
(c) Employ the same manner described above to the other side.

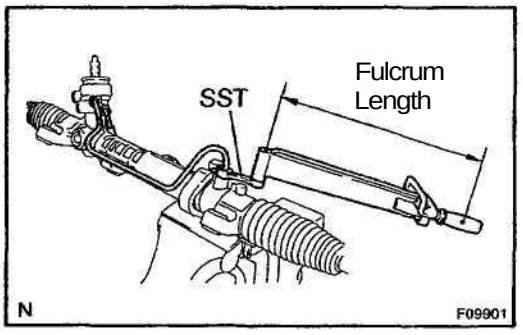

14. INSTALL *2* TURN PRESSURE TUBES

Using SST, install the 2 turn pressure tubes.
SST 09633–00020
Torque: 20 N·m (200 kgf·cm, 14 tt-lbf)

HINT:

- Use a torque wrench with a fulcrum length of 300 mm (11.81 in.).
- This torque value is effective in case that SST is parallel to a torque wrench.

INSTALLATION

1. INSTALL ENGINE REAR MOUNT INSULATOR AND ENGINE REAR MOUNT BRACKET

(a) Install the engine rear mount bracket with the 3 bolts.
Torque: 64 N·m (655 kgf·cm, 47 ft·lbf)

(b) Install the engine rear mount insulator with the through bolt.
Torque: 87 N·m (890 kgf·cm, 64 ft·lbf)

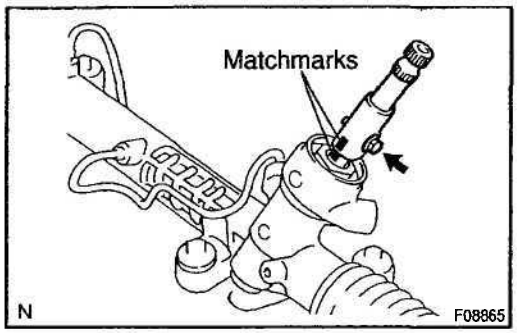

2. INSTALL PS GEAR ASSEMBLY

(a) Align the matchmarks on the intermediate extension and control valve shaft.

(b) Install the bolt.
Torque: 35 N·m (360 kgf-cm, 26 ft·lbf)

(c) Install the PS gear assembly with the 4 bolts to the front suspension member.
Torque: 58 N·m (591 kgf·cm, 43 ft·lbf)

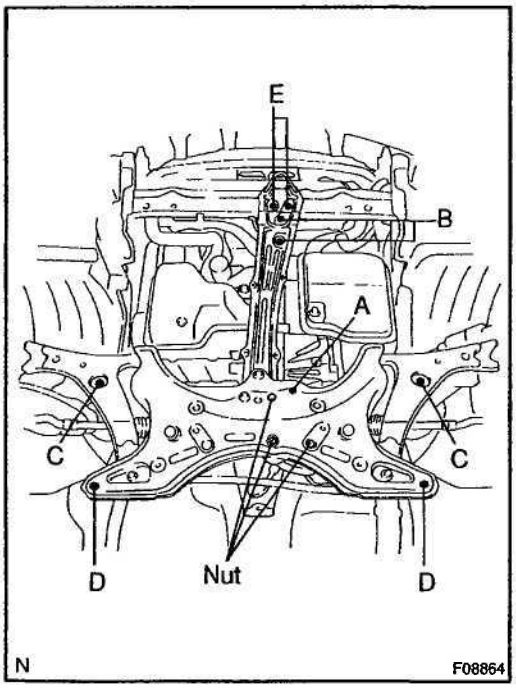

3. INSTALL FRONT SUSPENSION MEMBER WITH LOWER SUSPENSION ARM AND PS GEAR ASSEMBLY

Install the front suspension member with lower suspension arm and PS gear assembly with the 6 bolts (bolt C, D and E).
Torque:
Bolt C: 157 N·m (1,600 kgf·cm, 116 ft-lbf)
Bolt D: 157 N·m (1,600 kgf·cm, 116 ft-lbf)
Bolt E: 39 N·m (400 kgf·cm, 29 ft-lbf)

4. CONNECT ENGINE FRONT MOUNT INSULATOR AND FRONT SUSPENSION MEMBER

Connect the engine front mount insulator and front suspension member with the 2 bolts (bolt B).
Torque: 52 N·m (530 kgf·cm, 38 ft·lbf)

5. CONNECT ENGINE REAR MOUNT INSULATOR AND FRONT SUSPENSION MEMBER

Connect the engine rear mount insulator and front suspension member with the bolt (bolt A) and 3 nuts.
Torque: 52 N·m (530 kgf·cm, 38 ft·lbf)

6. CONNECT STABILIZER BAR

(a) Connect the stabilizer bar with the nut.
Torque: 44 N·m (449 kgf·cm, 32 ft·lbf)

(b) Employ the same manner described above to the other side.

7. CONNECT LOWER BALL JOINT TO LOWER SUSPENSION ARM (See page SA–45)

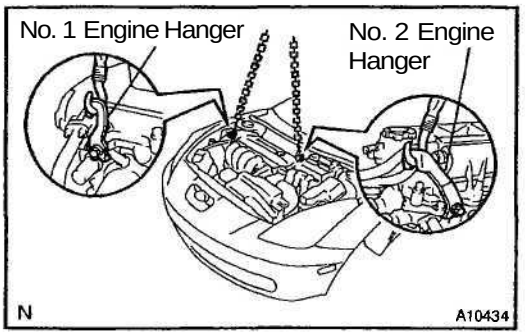

8. DISENGAGE ENGINE SLING DEVICE FROM ENGINE HANGERS

(a) Disengage the engine sling device from the engine hangers.

(b) Remove the No. 1 and No. 2 engine hangers.

(c) Connect the PCV hoses to the cylinder head cover.

(d) Install the No. 2 cylinder head cover with the 4 bolts.

9. INSTALL ENGINE HOOD (See page BO–9)

10. CONNECT COLUMN HOLE COVER SUB-ASSEMBLY

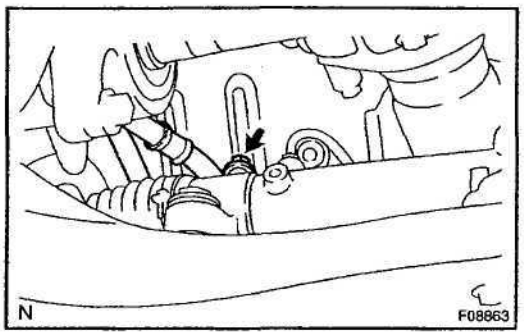

11. CONNECT TUBE CLAMP

Connect the tube clamp with the bolt.

Torque: 7.8 N·m (80 kgf·cm, 69 in.·lbf)

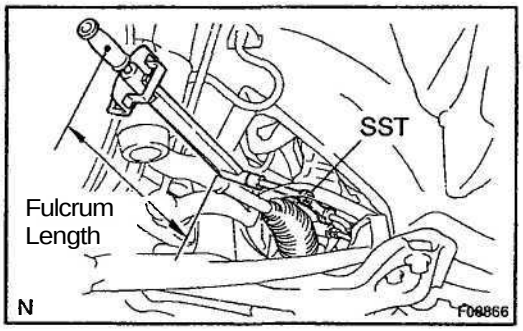

12. CONNECT PRESSURE FEED AND RETURN TUBES

Using SST, connect the pressure feed and return tubes.

SST 09631-22020

Torque: 37 N·m (375 kgf·cm, 27 tt-lbf)

HINT:

- Use a torque wrench with a fulcrum length of 345 mm (13.58 in.).
- This torque value is effective in case that SST is parallel to a torque wrench.

13. CONNECT NO. 2 INTERMEDIATE SHAFT ASSEMBLY (See page SR–19)

14. CONNECT RH AND LH TIE ROD ENDS (See page SA–16)

15. INSTALL RH, CENTER AND LH ENGINE UNDER COVERS

16. PLACE FRONT WHEELS FACING STRAIGHT AHEAD

HINT:

Do it with the front of the vehicle jacked up.

17. CENTER SPIRAL CABLE (See page SR–19)

18. INSTALL STEERING WHEEL

(a) Align the matchmarks on the steering wheel and steering column main shaft.

(b) Temporarily tighten the steering wheel set nut.

19. BLEED POWER STEERING SYSTEM (See page SR–4)

20. CHECK STEERING WHEEL CENTER POINT
21. TORQUE STEERING WHEEL SET NUT
    Torque: 34 N·m (350 kgf·cm, 25 ft·lbf)
22. INSTALL STEERING WHEEL PAD (See page SR–19)
23. CHECK FRONT WHEEL ALIGNMENT
    (See page SA–4)

– MEMO –

SUPPLEMENTAL RESTRAINT SYSTEM

SRS AIRBAG RS–1
STEERING WHEEL PAD AND
SPIRAL CABLE RS–12
FRONT PASSENGER
AIRBAG ASSEMBLY RS–26
SIDE AIRBAG ASSEMBLY RS–39
AIRBAG SENSOR ASSEMBLY RS–52
FRONT AIRBAG SENSOR RS–57
SIDE AIRBAG SENSOR ASSEMBLY RS–62
DOOR SIDE AIRBAG SENSOR RS–67
WIRE HARNESS AND CONNECTOR RS–72

RS

SRS AIRBAG

PRECAUTION

RS0JO-01

CAUTION:

- The CELICA is equipped with SRS, which comprises a driver airbag, front passenger airbag and side airbag. Failure to carry out service operations in the correct sequence could cause the SRS to unexpectedly deploy during servicing, possibly leading to a serious accident. Further, if a mistake is made in servicing the SRS, it is possible that the SRS may fail to operate when required. Before performing servicing (including removal or installation of parts, inspection or replacement), be sure to read the following items carefully, then follow the correct procedures described in the repair manual.
- Work must be started 90 seconds after the ignition switch is turned to the "LOCK" position and the negative (–) terminal cable is disconnected from the battery.
  (The SRS is equipped with a back–up power source so that if work is started within 90 seconds from disconnecting the negative (-) terminal cable of the battery, the SRS may be deployed.)
- Do not expose the steering wheel pad, front passenger airbag assembly, side airbag assembly, airbag sensor assembly, front airbag sensor side airbag sensor assembly or door side airbag sensor directly to hot air or flames.

NOTICE:

- Malfunction symptoms of the SRS are difficult to confirm, so the DTCs become the most important source of information when troubleshooting. When troubleshooting the SRS, always inspect the DTCs before disconnecting the battery.
- Even in cases of a minor collision where the SRS does not deploy, the steering wheel pad, front passenger airbag assembly, side airbag assembly, airbag sensor assembly, front airbag sensor, side airbag sensor assembly and door side airbag sensor should be inspected.
  (See page RS–14, RS–28, RS–42, RS–54, RS–59, RS–64 and RS–69)
- Before repairs, remove the airbag sensor if shocks are likely to be applied to the sensor during repairs.
- Never use SRS parts from another vehicle. When replacing parts, replace them with new parts.
- Never disassemble and repair the steering wheel pad, front passenger airbag assembly, side airbag assembly, airbag sensor assembly, front airbag sensor, side airbag sensor assembly or door side airbag sensor in order to reuse it.
- If the steering wheel pad, front passenger airbag assembly, side airbag assembly, airbag sensor assembly, front airbag sensor, side airbag sensor assembly or door side airbag sensor has been dropped, or if there are cracks, dents or other defects in the case, bracket or connector, replace it with new one.
- Use a volt/ohmmeter with high impedance (10 kΩ/V minimum) for troubleshooting the system's electrical circuits.
- Information labels are attached to the periphery of the SRS components. Follow the instructions on the notices.
- After work on the SRS is completed, perform the SRS warning light check (See page DI–326).
- When the negative (-) terminal cable is disconnected from the battery, the memory of the clock and audio system will be canceled. So before starting work, make a record of the contents memorized in the audio memory system. When work is finished, reset the audio systems as they were before and adjust the clock. To avoid erasing the memory in each memory system, never use a back- up power supply from outside the vehicle.
- If the vehicle is equipped with a mobile communication system, refer to the precaution in the IN section.

RS0JP-01

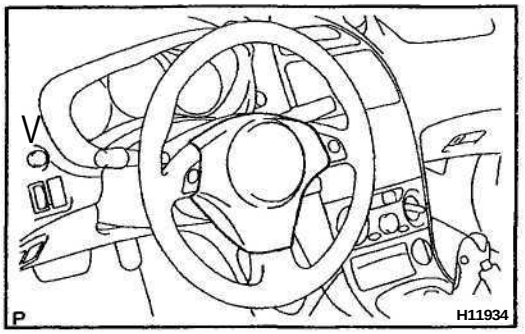

OPERATION

1. STEERING WHEEL PAD (with AIRBAG)

The inflater and bag of the SRS are stored in the steering wheel pad and cannot be disassembled. The inflater contains a squib, igniter charge, gas generator, etc., and inflates the bag when instructed by the airbag sensor assembly.

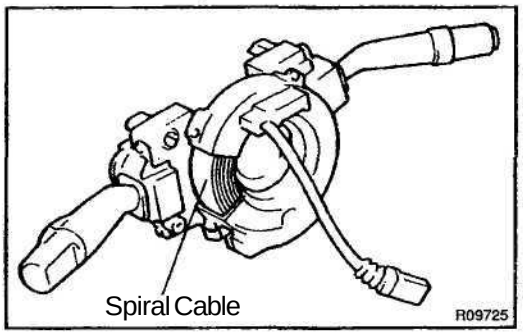

2. SPIRAL CABLE (in COMBINATION SWITCH)

A spiral cable is used as an electrical joint from the vehicle body side to the steering wheel.

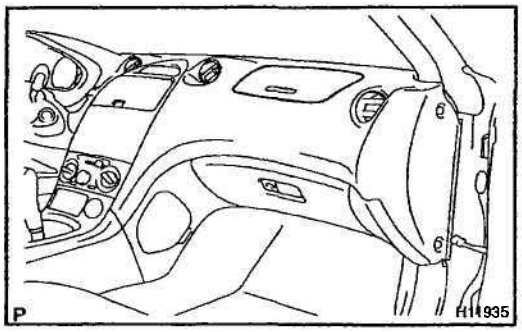

3. FRONT PASSENGER AIRBAG ASSEMBLY

The inflater and bag of the SRS are stored in the front passenger airbag assembly and cannot be disassembled. The inflater contains a squib, igniter charge, gas generator, etc., and inflates the bag when instructed by the airbag sensor assembly.

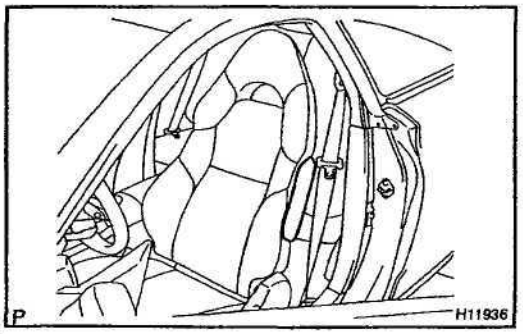

4. SIDE AIRBAG ASSEMBLY

The inflater and bag of the SRS side airbag are stored in the side airbag assembly and cannot be disassembled. The inflater contains a squib, igniter charge, gas generator, etc., and inflates the bag when instructed by the side airbag sensor assembly.

RS

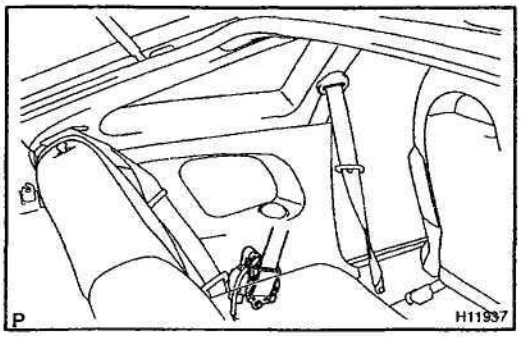

5. SEAT BELT PRETENSIONER

The seat belt pretensioner system is a component of the front seat outer belt. The pretensioner contains a squib, gas generator, wire, piston, etc., and operates in the event of a frontal collision. The seat belt pretensioner cannot be disassembled.

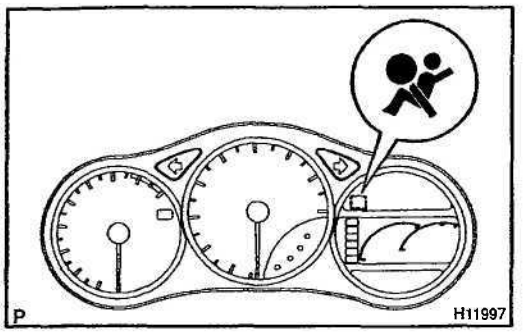

6. SRS WARNING LIGHT

The SRS warning light is located on the combination meter. It goes on to alert the driver of trouble in the system when a malfunction is detected in the airbag sensor assembly self–diagnosis. In normal operation conditions when the ignition switch is turned to the ON position, the light goes on for about 6 seconds and then goes off.

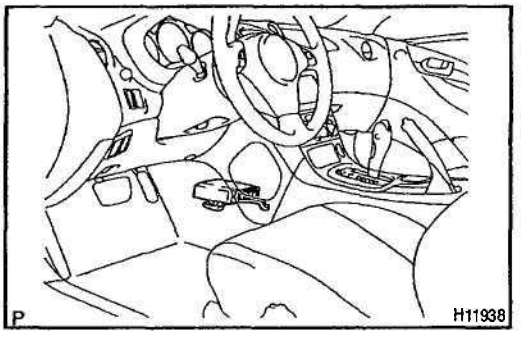

7. AIRBAG SENSOR ASSEMBLY

The airbag sensor assembly is mounted on the floor inside the lower center finish panel. The airbag sensor assembly consists of an airbag sensor, safing sensor, diagnosis circuit, ignition control, drive circuit, etc. It receives signals from the airbag sensor, front airbag sensor, side airbag sensor assembly and door side airbag assembly and judges whether the SRS must be activated or not. The airbag sensor assembly cannot be disassembled.

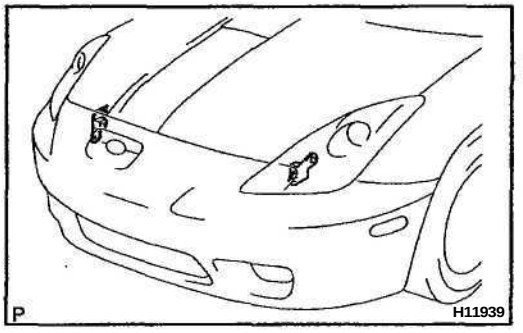

8. FRONT AIRBAG SENSOR

The front airbag sensor is mounted inside each of the side members. The sensor unit is a mechanical type. When the sensor detects deceleration force above a predetermined limit, contact is made in the sensor, sending a signal to the airbag sensor assembly. The front airbag sensor cannot be disassembled.

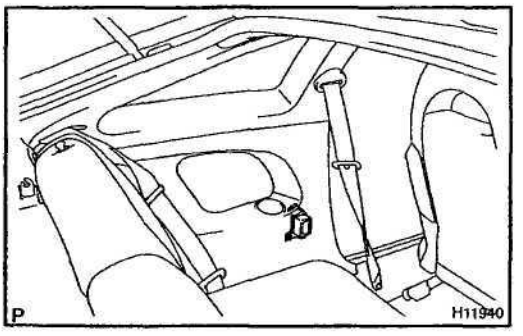

9. SIDE AIRBAG SENSOR ASSEMBLY

The side airbag sensor assembly is mounted in the LH and RH center pillars. The side airbag sensor assembly consists of a lateral deceleration sensor, safing sensor, diagnosis circuit, etc. It sends signals to the airbag sensor assembly to judge whether the SRS side airbag must be activated or not. The side airbag sensor assembly cannot be disassembled.

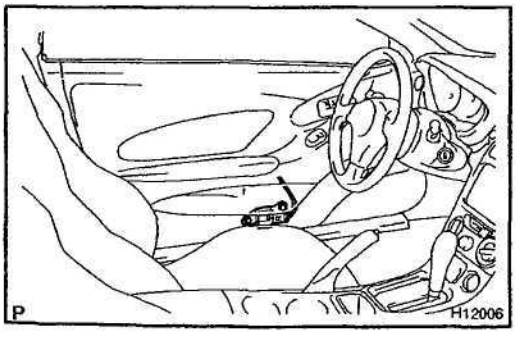

10. DOOR SIDE AIRBAG SENSOR

The door side airbag sensor is mounted on each of the door inside panel. The sensor unit is a mechanical type. When the sensor detects deceleration force above a predetermined limit, contact is made in the sensor, sending a signal to the airbag sensor assembly. The door side airbag sensor cannot be disassembled.

11. SRS CONNECTORS

HINT:

SRS connectors are located as shown in the following illustration.

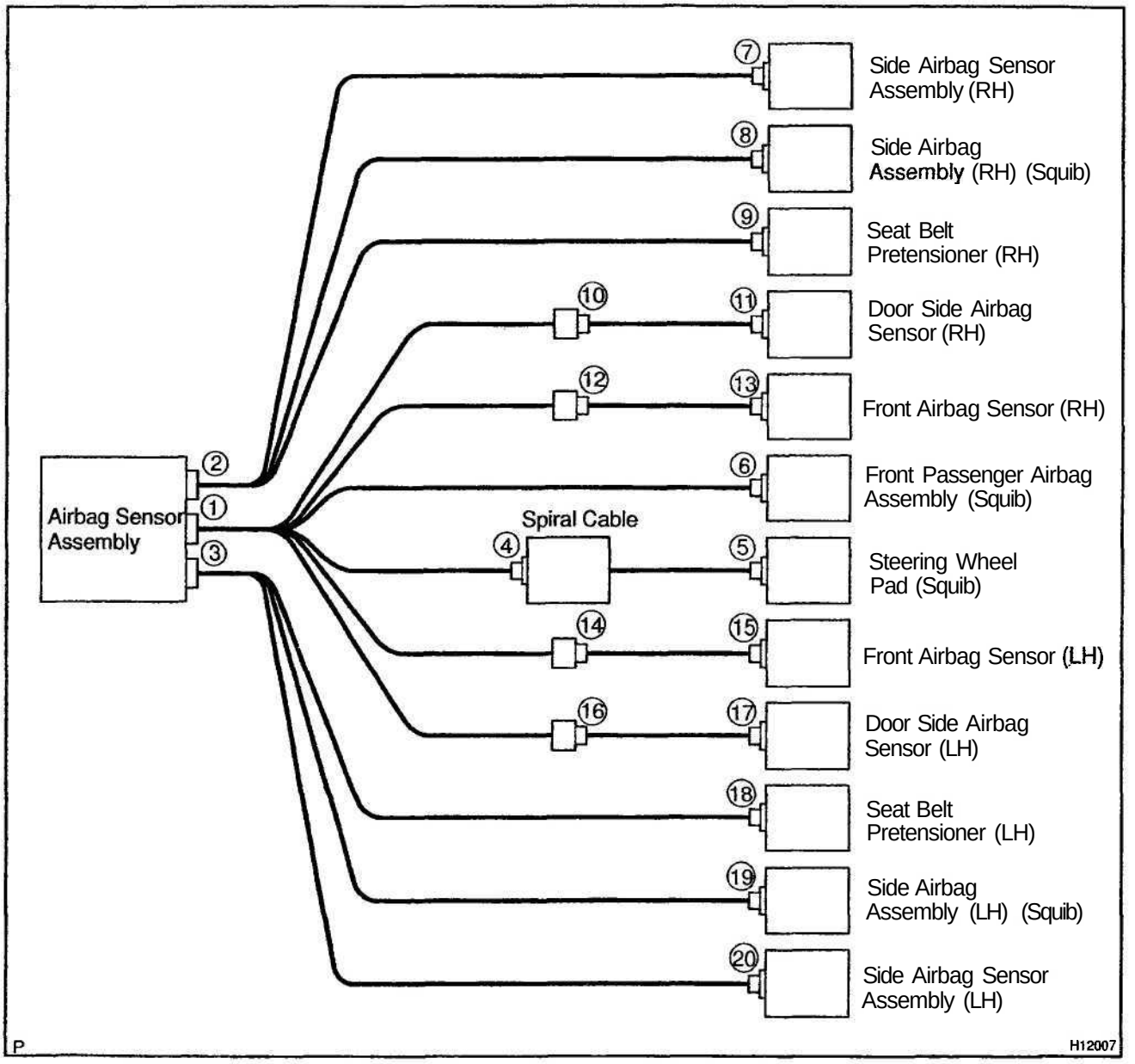

RS

No.	Item	Application
O)	Terminal Twin-Lock Mechanism	Connectors 1, 2, 3, 4, 5, 6, 7, 8, 9, 10, 11, 12, 13, 14, 15, 16, 17, 18, 19, 20
(2)	Airbag Activation Prevention Mechanism	Connectors 1, 2, 3, 4, 5, 6, 8, 19
(3)	Electrical Connection Check Mechanism	Connectors 1, 2, 3

(a) All connectors in the SRS are colored in yellow to distinguish them from other connectors. Connectors having special functions and specifically designed for the SRS are used in the locations shown on the previous page to ensure high reliability. These connectors use durable gold–plated terminals.

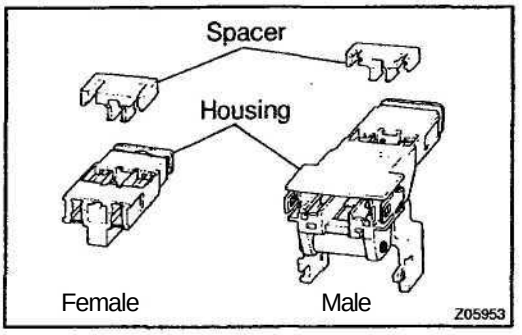

(1) Terminal Twin–Lock Mechanism
Each connector has a two–piece component consisting of a housing and a spacer. This design enables the terminal to be locked securely by two locking devices (the retainer and the lance) to prevent terminals from coming out.

(2) Airbag Activation Prevention Mechanism
Each connector contains a short spring plate. When the connector is disconnected, the short spring plate automatically connects positive (+) terminal and negative (–) terminal of the squib.

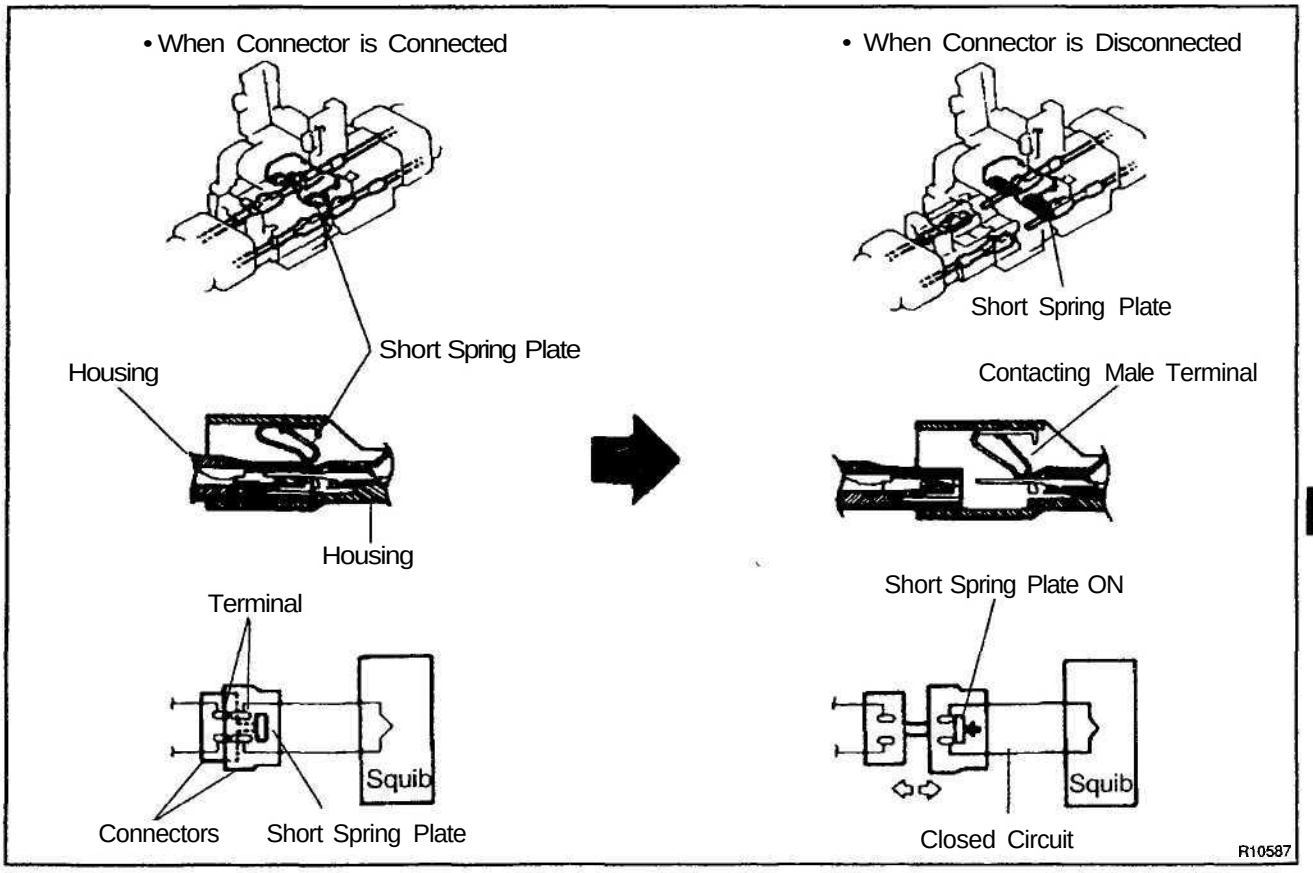

RS

HINT:
The type of connector is shown in the diagram on the previous page.

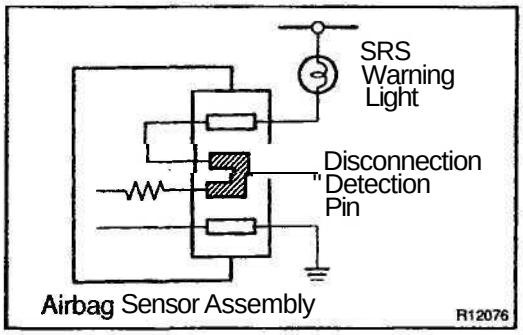

(3) Electrical Connection Check Mechanism
This mechanism electrically checks that connectors are connected correctly and completely. The electrical connection check mechanism is designed so that the disconnection detection pin connects with the diagnosis terminals when the connector housing lock is locked.

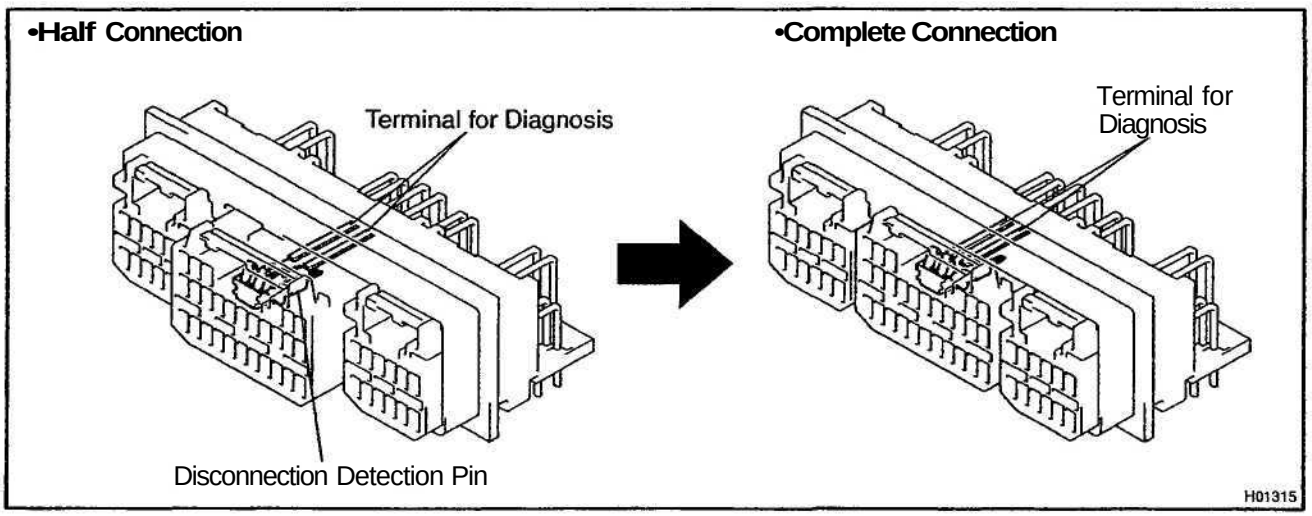

HINT:
The illustration shows connectors "1", "2" and "3" in step 11.

RS

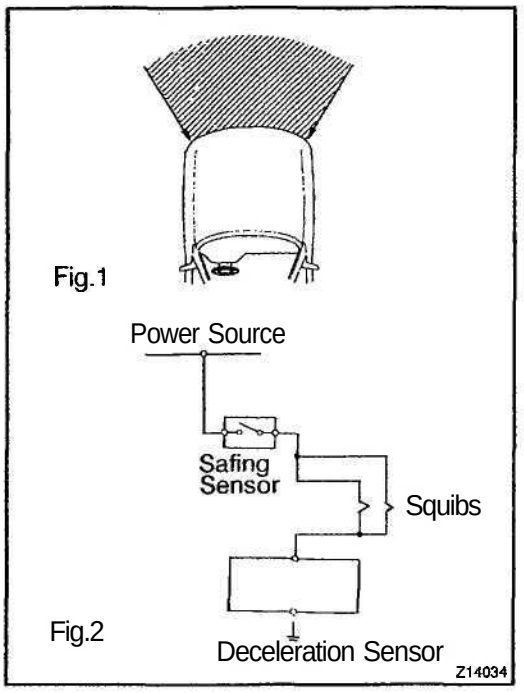

Fig.1

Fig.2

(b) When the vehicle is involved in a frontal collision in the hatched area (Fig. 1) and the shock is larger than the predetermined level, the SRS is activated automatically. A safing sensor is designed to go on at a smaller deceleration rate than the airbag sensor. As illustrated in Fig. 2, ignition is caused when current flows to the squib, which happens when a safing sensor and the deceleration sensor go on simultaneously. When a deceleration force acts on the sensors, 2 squibs in the driver airbag and front passenger airbag ignite and generate gas. The gas discharging into the driver airbag and front passenger airbag rapidly increases the pressure inside the bags, breaking open the steering wheel pad and instrument panel.
Bag inflation then ends, and the bags deflate as the gas is discharged through discharge holes at the bag's rear or side.

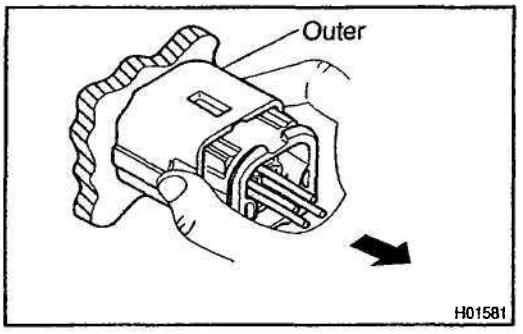

12. DISCONNECTION OF CONNECTORS FOR FRONT AIRBAG SENSOR, SIDE AIRBAG SENSOR AND DOOR SIDE AIRBAG SENSOR

(a) While holding both flank sides of the outer, slide the outer to the direction shown by an arrow.

(b) Lock of the connectors is released, then disconnect the connectors.

HINT:

Be sure to hold both flank sides of the outer. If holding the top and bottom sides, it will obstruct disconnection.

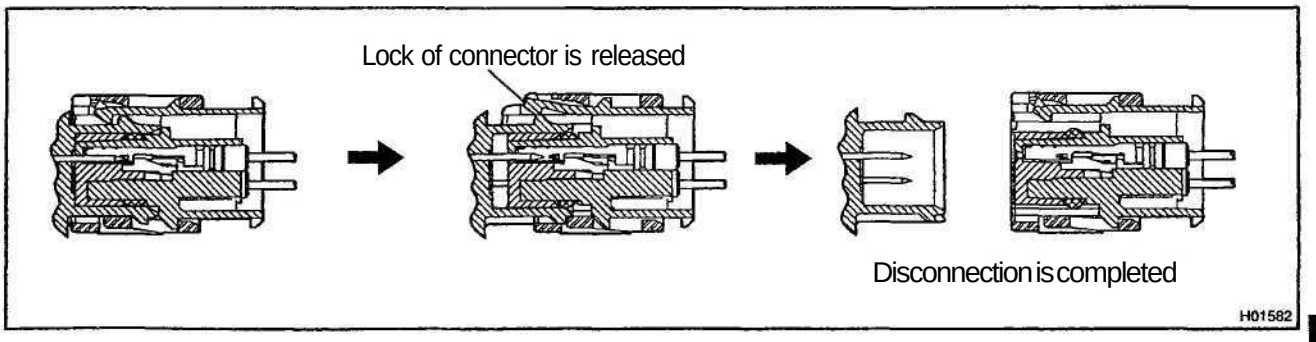

RS

13. CONNECTION OF CONNECTORS FOR FRONT AIR-BAG SENSOR, SIDE AIRBAG SENSOR AND DOOR SIDE AIRBAG SENSOR

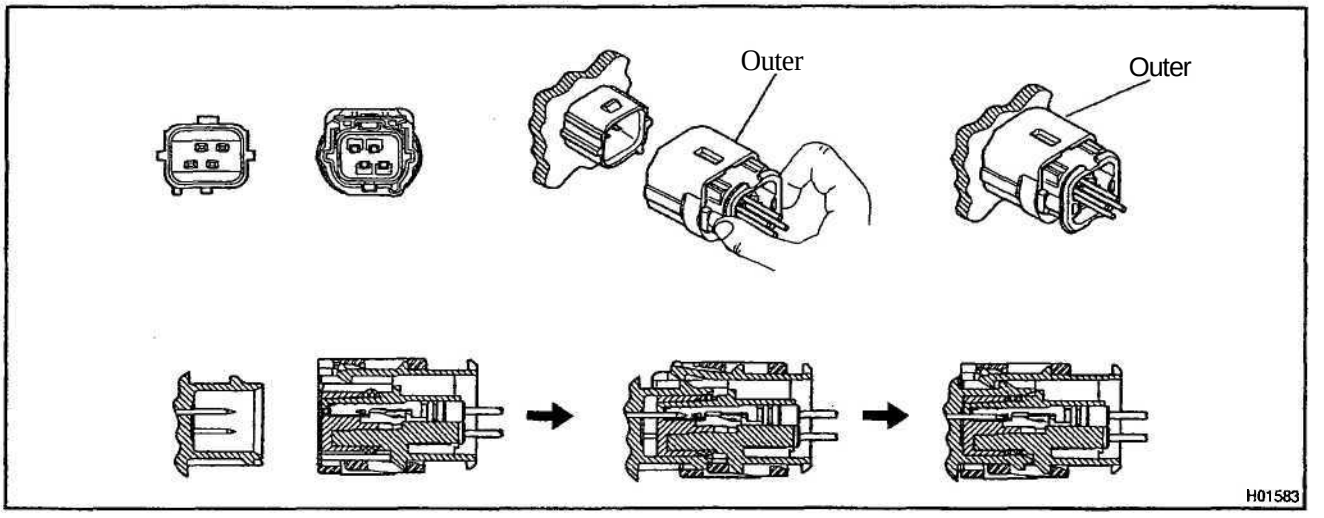

(a) Align the male connector (of the side of sensor) and female connector in the same direction as shown in the illustration and fit in them without rubbing.

(b) As they are fitted in, the outer slides rearward. Press it until the outer returns to its original position again.

If fitting stops half way, connectors will separate.

(c) Be sure to insert until they are locked. After fitting in, pull them slightly to check that they are locked. (When locked, make sure that the outer returns to its original position and sound at the time of fitting in can be heard.)

HINT:

- Do not fit in while holding the outer.
- When fitting in, the outer slides. Do not touch it.

14. DISCONNECTION OF SIDE AIRBAG CONNECTOR

(a) Place a finger on the slider.
(b) Slide the slider to release lock.
(c) Disconnect the connector.

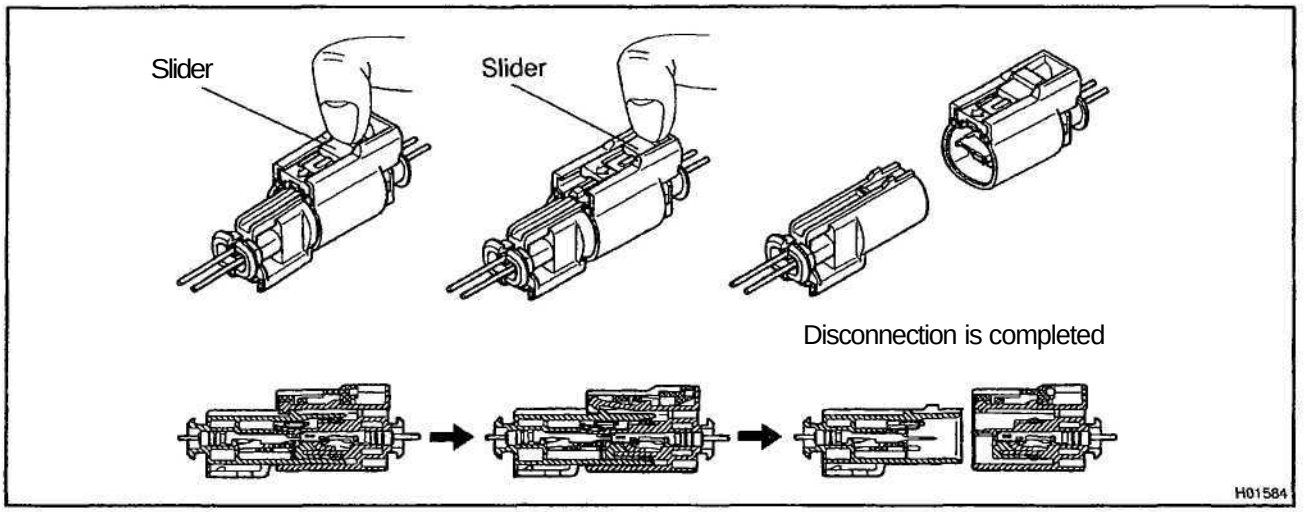

15. CONNECTION OF SIDE AIRBAG CONNECTOR

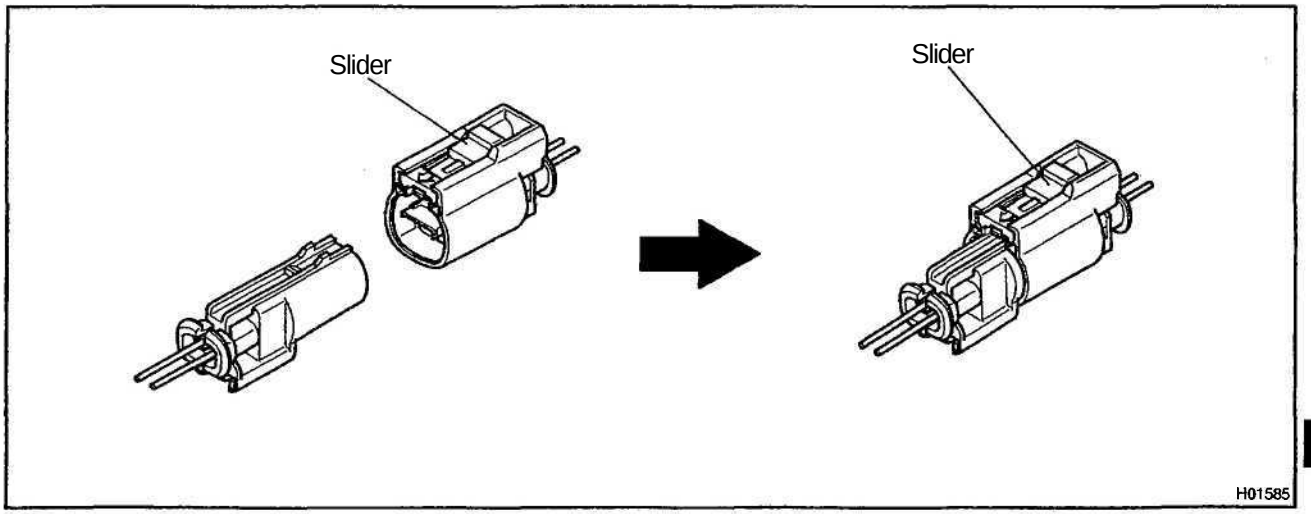

RS

(a) Align a lock part of male connector and a slider of female connector in the same direction as shown in the illustration, fit in them without rubbing.

(b) Be sure to insert until they are locked. After fitting in pull them slightly to check that they are locked. (When locked, make sure that the outer returns to its original position and sound at the time of fitting in can be heard.)

HINT:

- As the slider slides, do not touch it.
- Be careful not to deform the release board. If the release board is deformed, replace it with a new one.

16. DISCONNECTION OF CONNECTORS FOR STEERING WHEEL PAD (with AIRBAG) AND FRONT PASSENGER AIRBAG ASSEMBLY

(a) Place a finger on the slider.
(b) Slide the slider to release lock.
(c) Disconnect the connector.

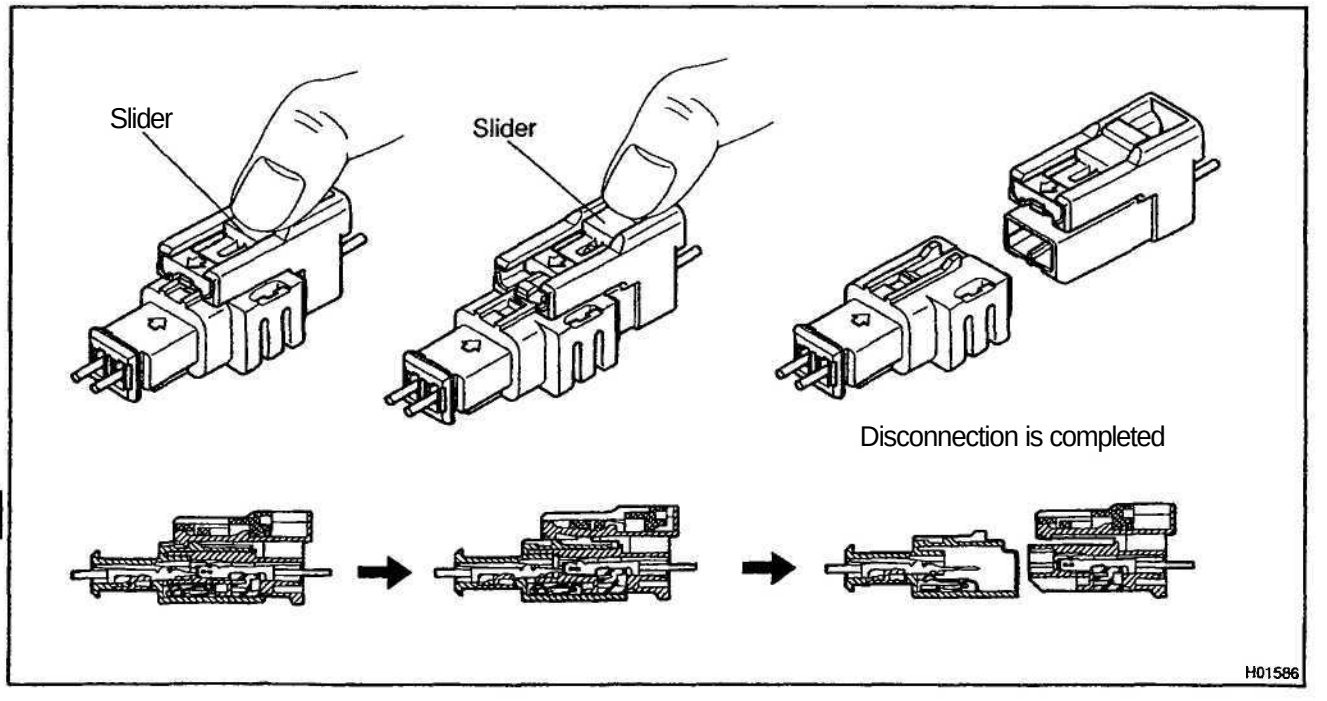

RS

17. CONNECTION OF CONNECTORS FOR STEERING WHEEL PAD (with AIRBAG) AND FRONT PASSENGER AIRBAG ASSEMBLY

(a) Align a lock part of male connector and a slider of female connector in the same direction as shown in the illustration, fit in them without rubbing.

(b) Be sure to insert until they are locked. After fitting in pull them slightly to check that they are locked. (When locked, make sure that the outer returns to its original position and sound at the time of fitting in can be heard.)

HINT:

- As the slider slides, do not touch it.
- Be careful not to deform the release board. If the release board is deformed, replace it with a new one.

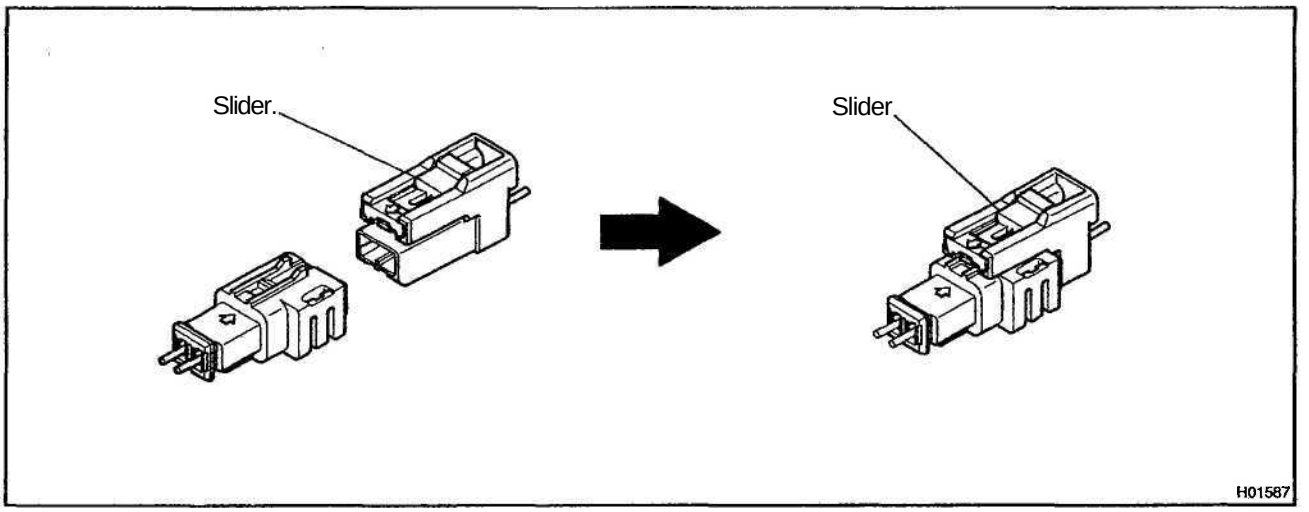

STEERING WHEEL PAD AND SPIRAL CABLE

COMPONENTS

RS0JQ-01

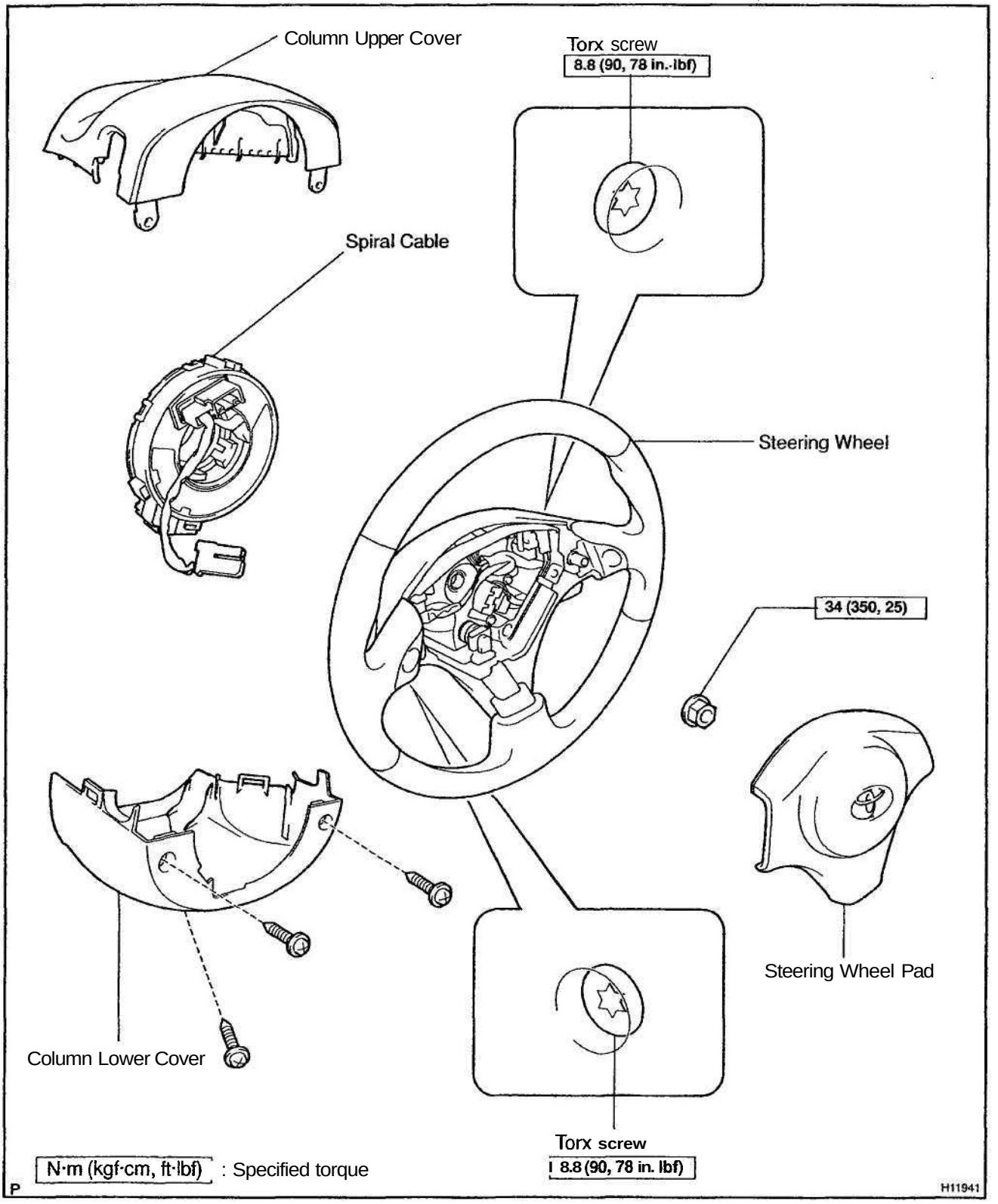

REMOVAL

HINT:

For step 1 to 4, refer to page SR–11.

1. **REMOVE STEERING WHEEL PAD**
2. **REMOVE STEERING WHEEL**
3. **REMOVE UPPER AND LOWER COLUMN COVERS**
4. **REMOVE SPIRAL CABLE**

RS0JS-01

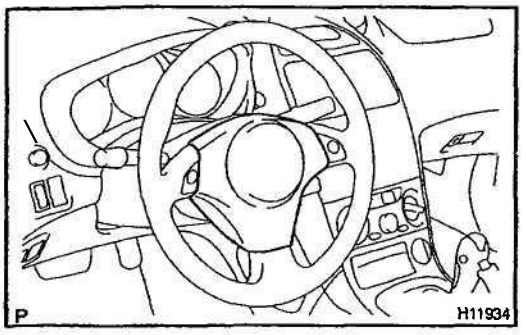

INSPECTION

1. Vehicle not involved in collision:
INSPECT SUPPLEMENTAL RESTRAINT SYSTEM

(a) Do a diagnostic system check (See page DI–326).

(b) Do a visual check which includes the following item with the steering wheel pad (with airbag) installed in the vehicle.

Check cuts, minute cracks or marked discoloration on the steering wheel pad top surface and in the grooved portion.

2. Vehicle involved in collision and airbag is not deployed:
INSPECT SUPPLEMENTAL RESTRAINT SYSTEM

(a) Do a diagnostic system check (See page DI-326).

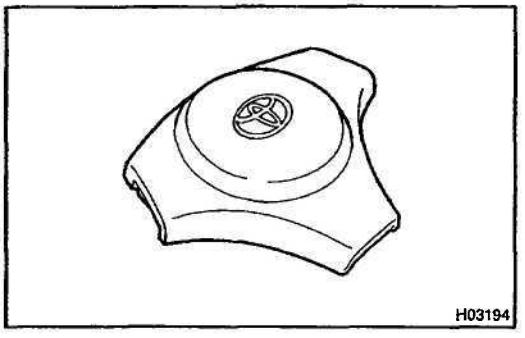

(b) Do a visual check which includes the following items with the steering wheel pad (with airbag) removed from the vehicle.

- Check cuts, minute cracks or marked discoloration on the steering wheel pad top surface and in the grooved portion.
- Check cuts and cracks in wire harness, and chipping in connectors.

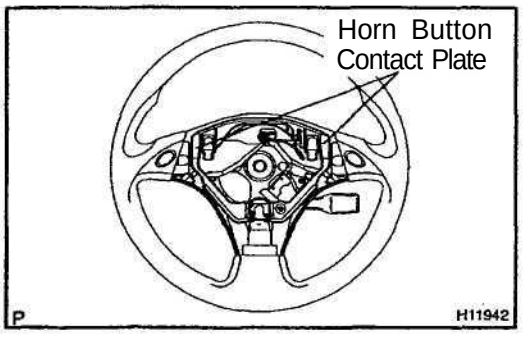

- Check the deformation of the horn button contact plate of the steering wheel.

CAUTION:
For removal and installation of the steering wheel pad, see page SR-11 and SR–19, be sure to follow the correct procedure.

HINT:

- If the horn button contact plate of the steering wheel is deformed, never repair it. Always replace the steering wheel assembly with a new one.
- There should be no interference between the steering wheel pad and steering wheel, and the clearance should be uniform all the way around when the new steering wheel pad is installed on the steering wheel.

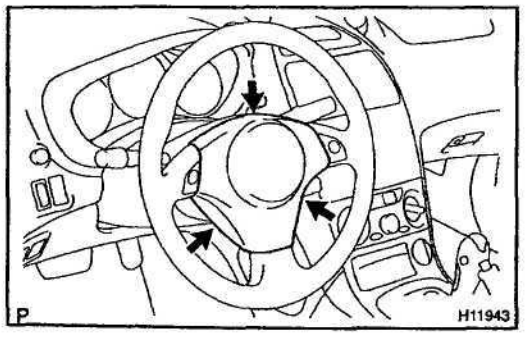

3. Vehicle involved in collision and airbag is deployed: INSPECT SUPPLEMENTAL RESTRAINT SYSTEM

(a) Do a diagnostic system check (See page DI–326).

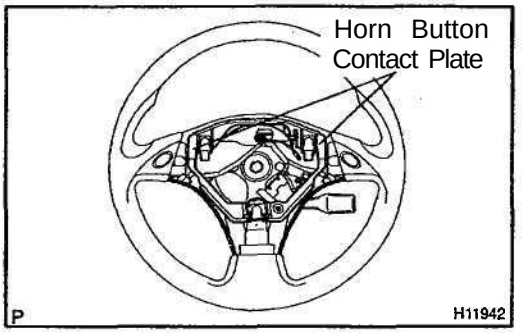

(b) Do a visual check which includes the following items with the steering wheel pad (with airbag) removed from the vehicle.

- Check the deformation on the horn button contact plate of the steering wheel.
- Check the damage on the spiral cable connector and wire harness.

CAUTION:
For removal and installation of the steering wheel pad, see page SR–11 and SR–19, and be sure to follow the correct procedure.

HINT:

- If the horn button contact plate of the steering wheel is deformed, never repair it. Always replace the steering wheel assembly with a new one.

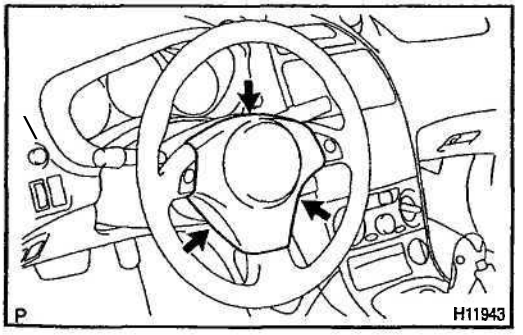

- There should be no interference between the steering wheel pad and steering wheel, and the clearance should be uniform all the way around when the new steering wheel pad is installed on the steering wheel.

RS0JT-01

DISPOSAL

HINT:

When scrapping vehicle equipped with an SRS or disposing of a steering wheel pad (with airbag), always first deploy the airbag in accordance with the procedure described below. If any abnormality occurs with the airbag deployment, contact the SERVICE DEPT. of TOYOTA MOTOR SALES, U.S.A., INC.

CAUTION:

- **Never dispose of a steering wheel pad which has an undeployed airbag.**
- **The airbag produces a sizeable exploding sound when it deploys, so perform the operation out–of–doors and where it will not create a nuisance to nearby residents.**

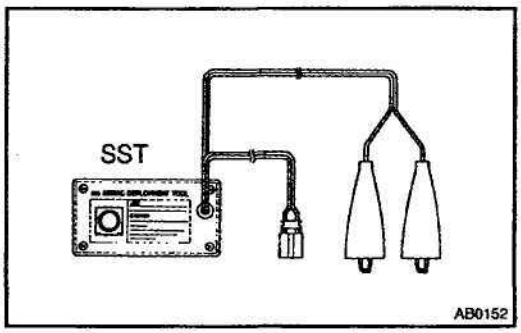

- **When deploying the airbag, always use the specified SST (SRS Airbag Deployment Tool). Perform the operation in a place away from electrical noise.**
  SST 09082–00700
- **When deploying an airbag, perform the operation at least 10 m (33 ft) away from the steering wheel pad.**
- **The steering wheel pad is very hot when the airbag is deployed, so leave it alone for at least 30 minutes after deployment.**
- **Use gloves and safety glasses when handling a steering wheel pad with the deployed airbag.**
- **Always wash your hands with water after completing the operation.**
- **Do not apply water, etc. to a steering wheel pad with the deployed airbag.**

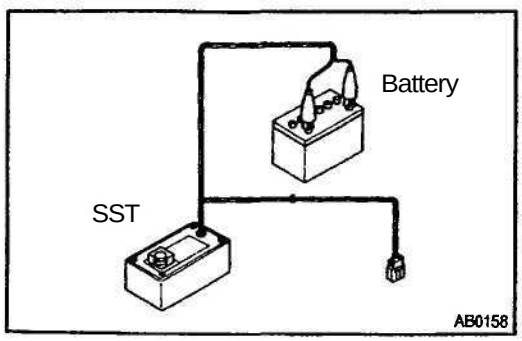

1. AIRBAG DEPLOYMENT WHEN SCRAPPING VEHICLE

HINT:

Have a battery ready as the power source to deploy the airbag.

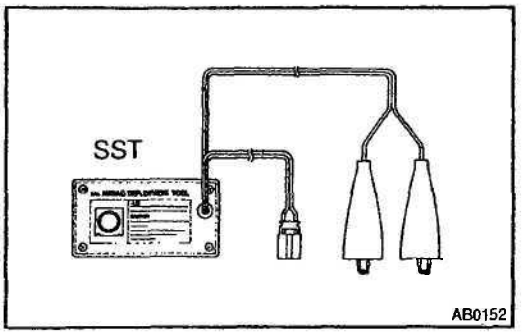

(a) Check functioning of the SST.

CAUTION:

When deploying the airbag, always use the specified SST: SRS Airbag Deployment Tool.

SST 09082–00700

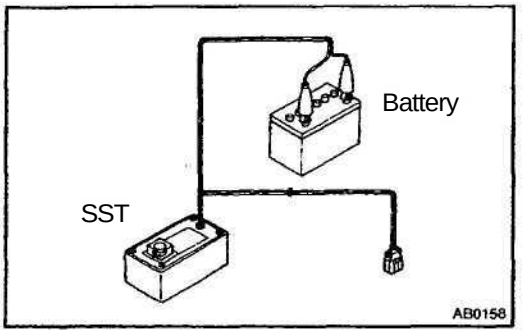

(1) Connect the red clip of the SST to the battery positive (+) terminal and the black clip to the battery negative (-) terminal.

HINT:

Do not connect the yellow connector which will be connected with the supplemental restraint system.

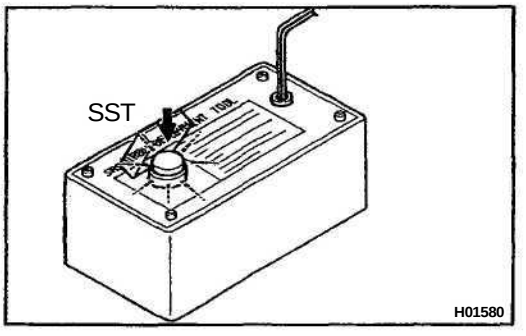

(2) Press the SST activation switch, and check that the LED of the SST activation switch lights up.

CAUTION:

If the LED lights up when the activation switch is not being pressed, SST malfunction is probable, so definitely do not use the SST.

(3) Disconnect the SST from the battery.

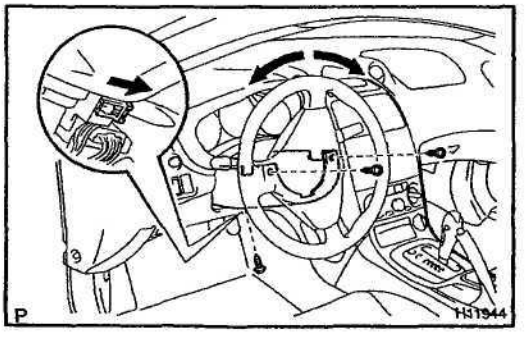

(b) Install the SST.

CAUTION:

Check that there is no looseness in the steering wheel and steering wheel pad.

(1) While turning the steering wheel right / left, remove the 3 screws and column lower cover.

(2) Disconnect the airbag connector of the spiral cable.

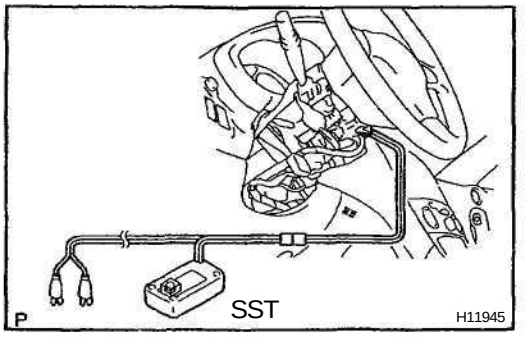

(3) Connect the connectors of the 2 SST to the airbag connector of the spiral cable.

SST 09082–00700, 09082–00760

NOTICE:

To avoid damaging the connector of the SST and wire harness, do not lock the secondary lock of the twin lock.

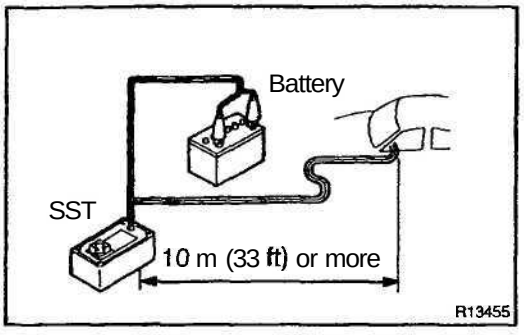

(4) Move the SST at least 10 m (33 ft) away from the front of the vehicle.

(5) Close all the doors and windows of the vehicle.

NOTICE:

Take care not to damage the SST wire harness.

(6) Connect the SST red clip to the battery positive (+) terminal and the black clip to the negative (-) terminal.

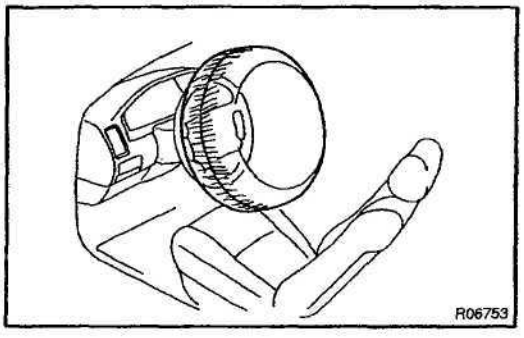

(c) Deploy the airbag.

(1) Check that no one is inside the vehicle or within 10 m (33 ft) area around the vehicle.

(2) Press the SST activation switch and deploy the airbag.

CAUTION:

- **The steering wheel pad is very hot when the airbag is deployed, so leave it alone for at least 30 minutes after deployment.**
- **Use gloves and safety glasses when handling a steering wheel pad with the deployed airbag.**
- **Always wash your hands with water after completing the operation.**
- **Do not apply water, etc. to a steering wheel pad with the deployed airbag.**
- **When scrapping a vehicle, deploy the airbag and scrap the vehicle with the steering wheel pad still installed.**
- **When moving a vehicle for scrapping which has a steering wheel pad with deployed airbag, use gloves and safety glasses.**

HINT:

The airbag deploys simultaneously as the LED of the SST activation switch lights up.

2. DEPLOYMENT WHEN DISPOSING OF STEERING WHEEL PAD ONLY

NOTICE:

- **When disposing of the steering wheel pad (with airbag) only, never use the customers vehicle to deploy the airbag.**
- **Be sure to follow the procedure given below when deploying the airbag.**

HINT:

Have a battery ready as the power source to deploy the airbag.

(a) Remove the steering wheel pad (See page SR–11).

CAUTION:

- **When removing the steering wheel pad, work must be started 90 seconds after the ignition switch is turned to the "LOCK" position and the negative (-) terminal cable is disconnected from the battery.**
- **When storing the steering wheel pad, keep the upper surface of the pad facing upward.**

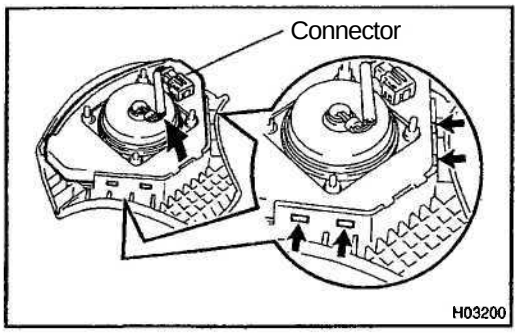

(b) Remove the connector on the steering wheel pad rear surface.

(c) Remove the steering wheel pad cover.

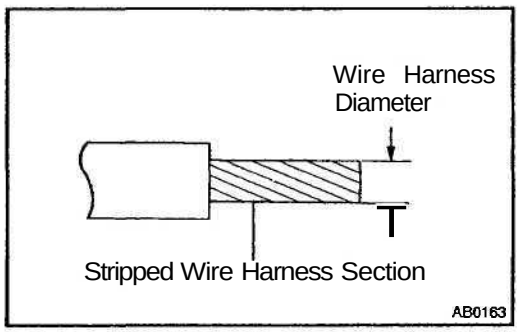

(d) Using a service–purpose wire harness tie down the steering wheel pad to the disc wheel.

Wire harness: Stripped wire harness section 1.25 mm² or more (0.0019 in². or more)

CAUTION:

If a wire harness which is too thin or some other thing is used to tie down the steering wheel pad, it may be snapped by the shock when the airbag is deployed. This is highly dangerous. Always use a wire harness for vehicle use which is at least 1.25 mm² (0.0019 in².).

HINT:

To calculate the square of the stripped wire harness section:

Square = 3.14 x (Diameter)² divided by 4

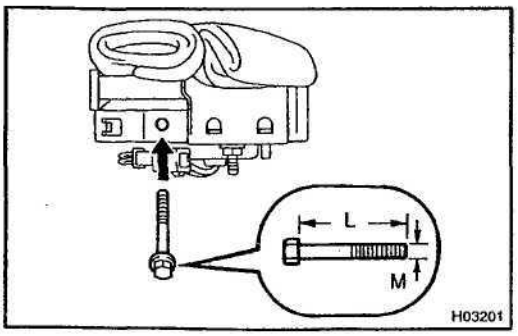

(1) Install the 2 bolts with washers in the 2 bolt holes in the steering wheel pad.

Bolt:
L: 35. mm (1.387 in.)
M: 6.0 mm (0.236 in.)
Pitch: 1.0 mm (0.039 in.)

NOTICE:

- **Tighten the bolts by hand until the bolts become difficult to turn.**
- **Do not tighten the bolts too much.**

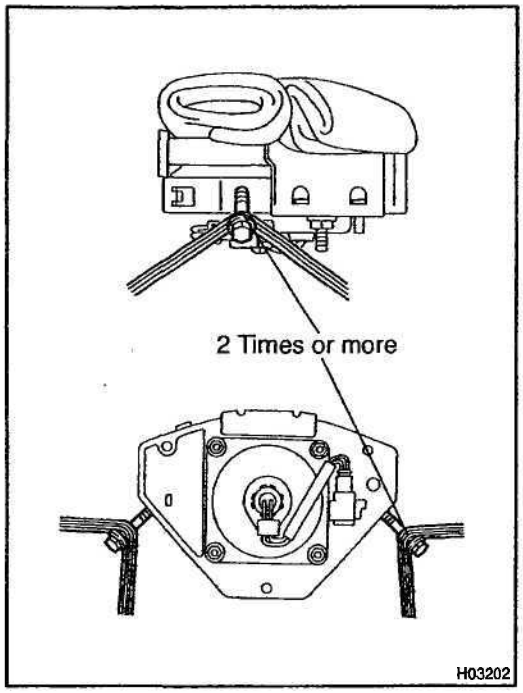

(2) Using 3 wire harness, wind the wire harness at least 2 times each around the bolts installed on the left and right sides of the steering wheel pad.

CAUTION:

- **Tightly wind the wire harness around the bolts so that there is no slack.**
- **If there is slackness in the wire harness, the steering wheel pad may come loose due to the shock when the airbag is deployed. This is highly dangerous.**

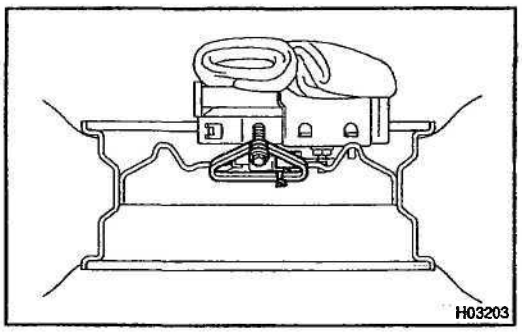

(3) Face the upper surface of the steering wheel pad upward. Separately tie the left and right sides of the steering wheel pad to the disc wheel through the hub nut holes. Position the steering wheel pad connector so that it hangs downward through a hub hole in the disc wheel.

CAUTION:

- **Make sure that the wire harness is tight. It is very dangerous when looseness in the wire harness results in the steering wheel pad coming free due to the shock from the airbag deploying.**
- **Always tie down the steering wheel pad with the pad side facing upward. It is very dangerous if the steering wheel pad is tied down with the metal surface facing upward as the wire harness will be cut by the shock from the airbag deploying and the steering wheel pad will be thrown into the air.**

NOTICE:

The disc wheel will be marked by airbag deployment, so when disposing of the airbag use a redundant disc wheel.

(e) Check functioning of the SST (See step 1–(a)).
SST 09082–00700

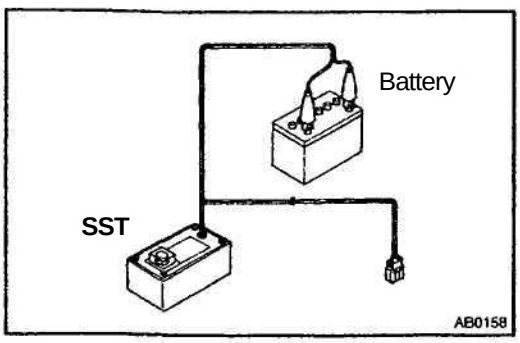

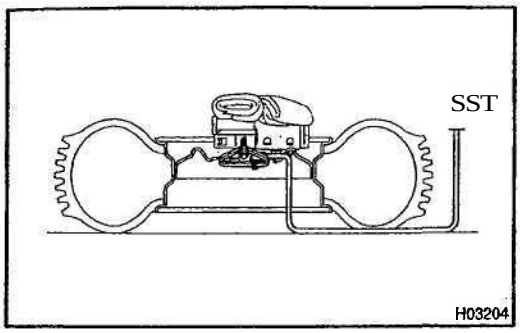

(f) Install the SST.

CAUTION:

Place the disc wheel on the level ground.

(1) Connect the connectors of the 2 SST to the steering wheel pad connector.

SST 09082–00700, 09082–00760

NOTICE:

To avoid damaging the SST connector and wire harness, do not lock the secondary lock of the twin lock. Also, secure some slack for the SST wire harness inside the disc wheel.

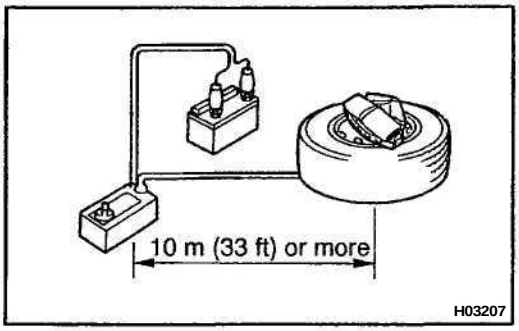

(2) Move the SST to at least 10 m (33 ft) away from the steering wheel pad tied down on the disc wheel.

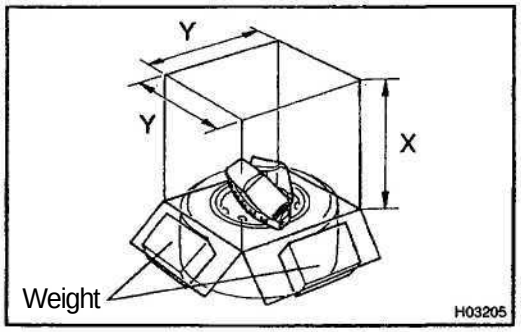

(g) Cover the steering wheel pad with a cardboard box or tires.

- Covering method using a cardboard box:
  Cover the steering wheel pad with the cardboard box and weight the cardboard box down in 4 places with at least 190 N (20 kg, 44 lb).

Size of cardboard box:

Must exceed the following dimensions:

X = 460 mm (18.11 in.)

Y = 650 mm (25.59 in.)

NOTICE:

- **When dimension Y of the cardboard box exceeds the diameter of the disc wheel with tire to which the steering wheel pad is tied, X should be the following size.**
  X = 460 mm (18.11 in.) + width of tire
- **If a cardboard box smaller than the specified size is used, the cardboard box will be broken by the shock from the airbag deployment.**

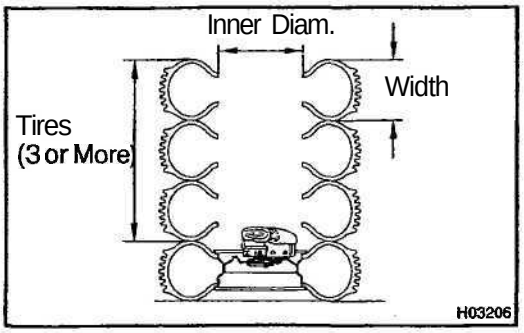

- Covering method using tires:
  Place at least 3 tires without disc wheel on top of the disc wheel with tire to which the steering wheel pad is tied.

Tire size: Must exceed the following dimensions–
Width: 185 mm (7.87 in.)
Inner diameter: 360 mm (14.17 in.)

CAUTION:
Do not use tires with disc wheels.
NOTICE:
The tires may be marked by the airbag deployment, so use the redundant tires.

(h) **Deploy the airbag.**

(1) Connect the SST red clip to the battery positive (+) terminal and the black clip to the battery negative (–) terminal.

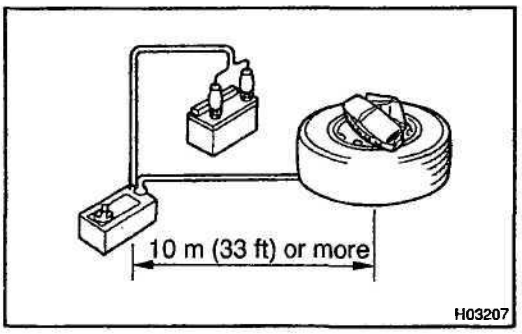

(2) Check that no one is within 10 m (33 ft) area around the disc wheel which the steering wheel pad is tied to.

(3) Press the SST activation switch and deploy the airbag.

HINT:
The airbag deploys simultaneously as the LED of the SST activation switch lights up.

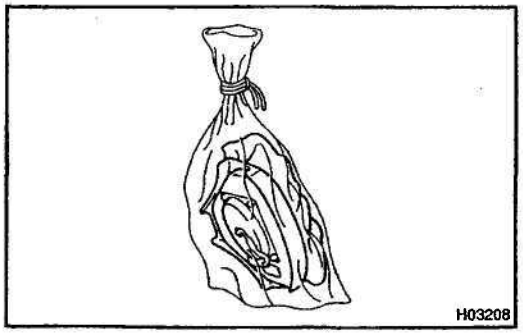

(i) Dispose of the steering wheel pad (with airbag).

CAUTION:

- **The steering wheel pad is very hot when the airbag is deployed, so leave it alone for at least 30 minutes after deployment.**
- **Use gloves and safety glasses when handling a steering wheel pad with the deployed airbag.**
- **Always wash your hands with water after completing the operation.**
- **Do not apply water, etc. to a steering wheel pad with the deployed airbag.**

(1) Remove the steering wheel pad from the disc wheel.

(2) Place the steering wheel pad in a vinyl bag, tie the end tightly and dispose of it in the same way as other general parts disposal.

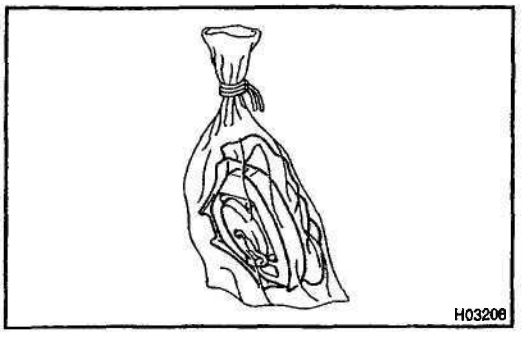

3. DEPLOYMENT WHEN DISPOSING OF STEERING WHEEL PAD WITH AIRBAG DEPLOYED IN COLLISION

Dispose of the steering wheel pad (with airbag).

CAUTION:

- **The steering wheel pad is very hot when the airbag is deployed, so leave it alone for at least 30 minutes after deployment.**
- **When moving a vehicle for scrapping which has a steering wheel pad with the deployed airbag, use gloves and safety glasses.**
- **Use gloves and safety glasses when handling a steering wheel pad with deployed airbag.**
- **Always wash your hands with water after completing the operation.**
- **Do not apply water, etc. to a steering wheel pad with deployed airbag.**

(1) Remove the steering wheel pad from the steering wheel (See page SR–11).

(2) Place the steering wheel pad in a vinyl bag, tie the end tightly and dispose of it in the same way as other general parts disposal.

RS0JU–01

REPLACEMENT

REPLACEMENT REQUIREMENTS

In the following cases, replace the steering wheel pad, steering wheel or spiral cable.

Case	Replacing part
If the airbag has been deployed.	Steering wheel pad
If the steering wheel pad has been found to be faulty in troubleshooting.	Steering wheel pad
If the spiral cable has been found to be faulty in troubleshooting.	Spiral cable
If the steering wheel pad has been found to be faulty during checking items (See page RS–14).	Steering wheel pad
If the steering wheel has been found to be faulty during checking items (See page RS–14).	Steering wheel
If the spiral cable has been found to be faulty during checking items (See page RS–14).	Spiral cable
If the steering wheel pad has been dropped.	Steering wheel pad

CAUTION:

For removal and installation of the steering wheel pad, see page SR–11 and SR–19. Be sure to follow the correct procedure.

INSTALLATION

HINT:

For step 1 to 4, refer to page SR–19.

1. **INSTALL SPIRAL CABLE**
2. **INSTALL UPPER AND LOWER COLUMN COVERS**
3. **INSTALL STEERING WHEEL**
4. **INSTALL STEERING WHEEL PAD**

FRONT PASSENGER AIRBAG ASSEMBLY

COMPONENTS

RSOJW-01

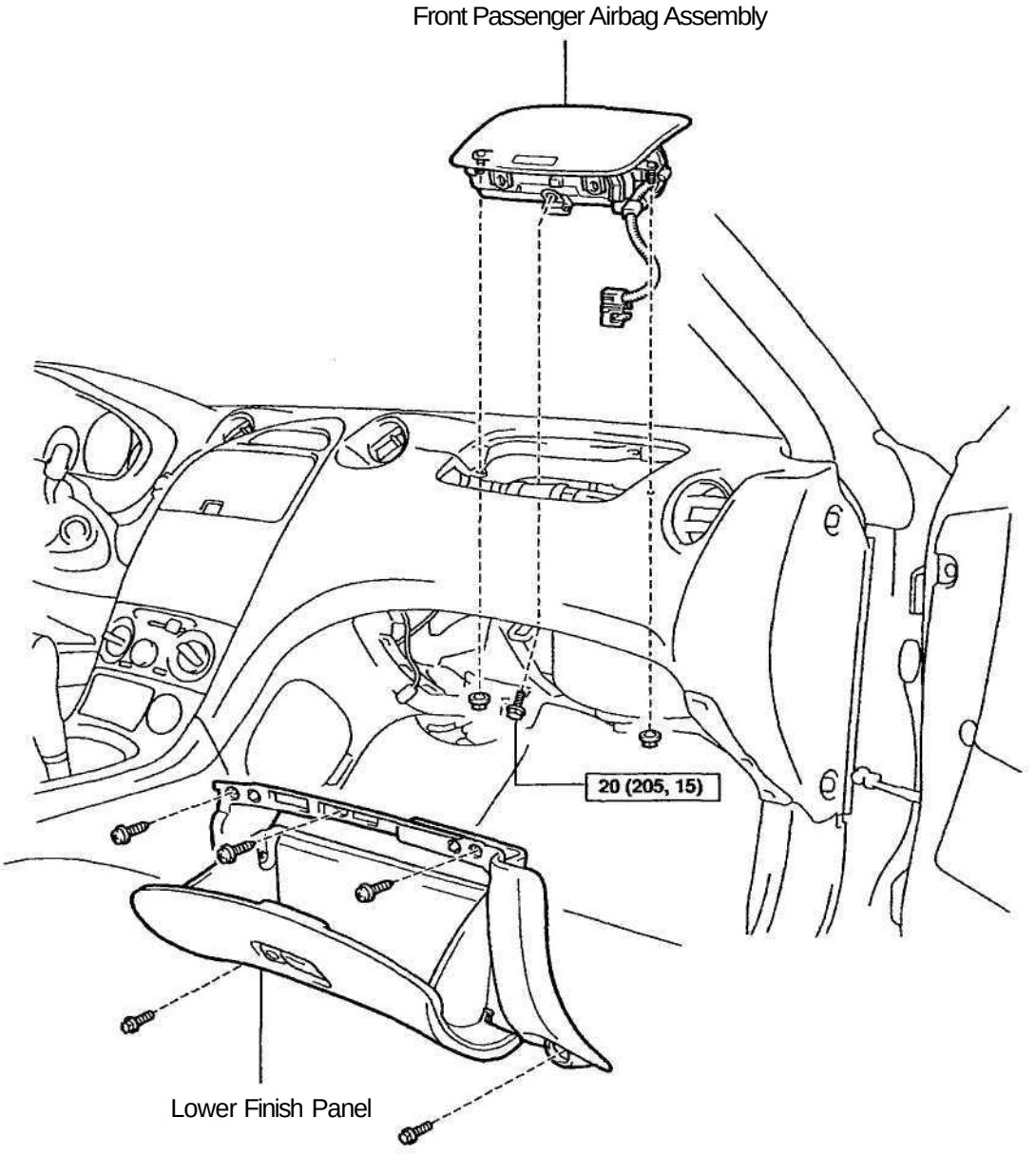

N·m (kgf·cm, ft·lbf) : Specified torque

P

H11957

RS0JX-01

REMOVAL

NOTICE:

- If the wiring connector of the SRS is disconnected and the ignition switch is in ON position, DTCs will be recorded.
- Never use the airbag parts from another vehicle. When replacing parts, replace them with new parts.

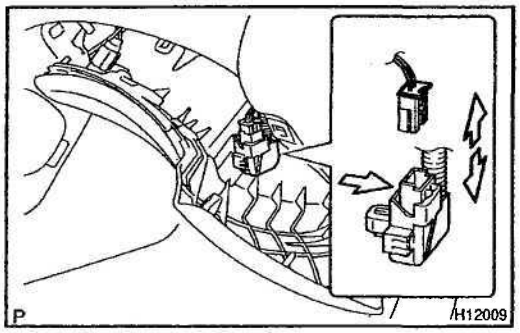

1. DISCONNECT AIRBAG CONNECTOR

(a) Remove the 3 screws, 2 bolts and lower finish panel.

(b) Remove the connector cover from the lower finish panel.

NOTICE:

When handling the airbag connector, take care not to damage the airbag wire harness.

(c) Disconnect the airbag connector.

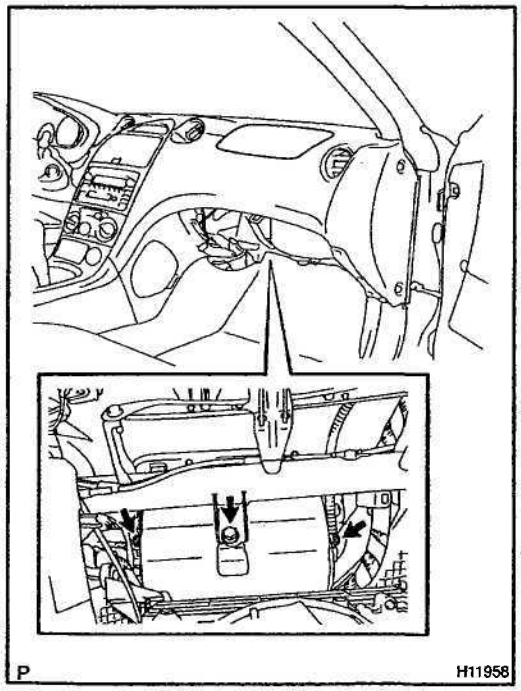

2. REMOVE FRONT PASSENGER AIRBAG ASSEMBLY

Remove the bolt and 2 nuts.

CAUTION:

- Do not store the front passenger airbag assembly with the airbag deployment side facing downward.
- Never disassemble the front passenger airbag assembly.

NOTICE:

When removing the front passenger airbag assembly, take care not to damage the wire harness.

RS0JY-01

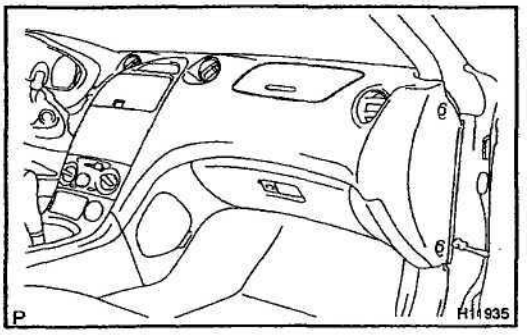

INSPECTION

1. **Vehicles not involved in collision:**
   INSPECT SUPPLEMENTAL RESTRAINT SYSTEM

(a) Do a diagnostic system check (See page DI–326).

(b) Do a visual check which includes the following item with the front passenger airbag assembly installed in the vehicle.

Check cuts, minute cracks or marked discoloration on the front passenger airbag assembly and instrument panel.

2. **Vehicle involved in a collision and airbag is not deployed:**
   INSPECT SUPPLEMENTAL RESTRAINT SYSTEM

(a) Do a diagnostic system check (See page DI-326).

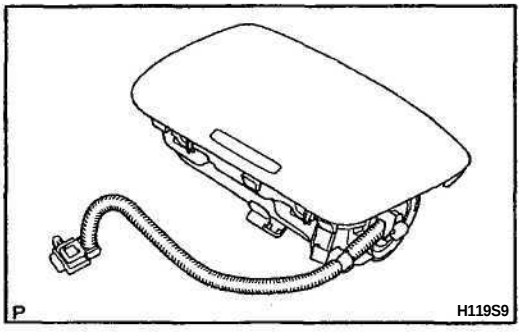

(b) Do a visual check which includes the following items with the front passenger airbag assembly removed from the vehicle.

- Check cuts, minute cracks or marked discoloration on the front passenger airbag assembly.
- Check cuts and cracks in wire harness, and for chipping in connectors.

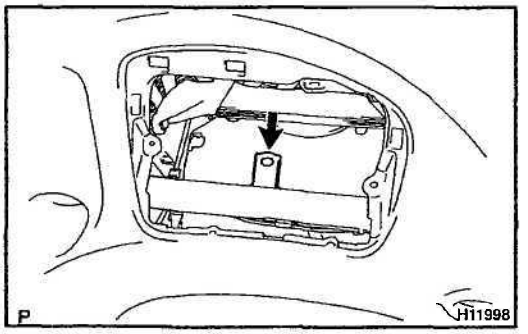

- Check the deformation or cracks on the instrument panel and instrument panel reinforcement.

CAUTION:

For removal and installation of the front passenger airbag assembly, see page RS–27 and RS–38, and be sure to follow the correct procedure.

HINT:

If the instrument panel or instrument panel reinforcement is deformed or cracked, never repair it. Always replace it with a new one.

3. Vehicle involved in a collision and airbag is deployed: INSPECT SUPPLEMENTAL RESTRAINT SYSTEM

(a) Do a diagnostic system check (See page DI–326).

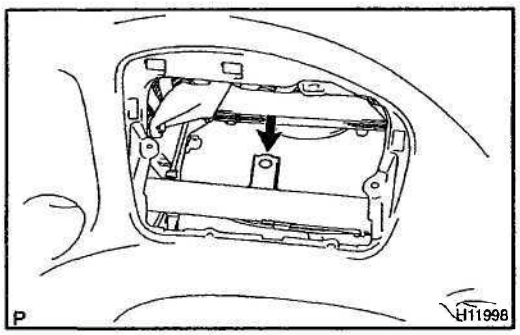

(b) Do a visual check which includes the following items with the front passenger airbag assembly removed from the vehicle.

- Check the deformation or cracks on the instrument panel and instrument panel reinforcement.
- Check the damage on the connector and wire harness.

CAUTION:

For removal and installation of the front passenger airbag assembly, see page SR–11 and SR–19, and be sure to follow the correct procedure.

HINT:

If the instrument panel or instrument panel reinforcement is deformed or cracked, never repair it. Always replace it with a new one.

RS0JZ-01

DISPOSAL

HINT:

When scrapping vehicle equipped with an SRS or disposing of a front passenger airbag assembly, always first deploy the airbag in accordance with the procedure described below. If any abnormality occurs with the airbag deployment, contact the SERVICE DEPT. of TOYOTA MOTOR SALES, U.S.A., INC.

CAUTION:

- Never dispose of a front passenger airbag assembly which has an **undeployed** airbag.
- The airbag produces a sizeable exploding sound when it deploys, so perform the operation **out–of–** doors and where it will not create a nuisance to nearby residents.

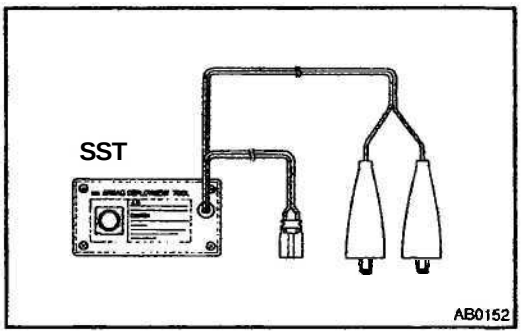

- When deploying the airbag, always use the specified SST (SRS Airbag Deployment Tool). Perform the **operation** in a place away **from** electrical noise.
  SST 09082–00700
- When deploying an airbag, perform the operation at least 10 m (33 ft) away from the front passenger airbag assembly.
- The front passenger airbag assembly is very hot when the airbag is deployed, so leave it alone for at least 30 minutes after deployment.
- Use gloves and safety glasses when handling a front passenger airbag assembly with the deployed airbag.
- Always wash your hands with water after completing the operation.
- Do not apply water, etc. to a front passenger airbag assembly with the deployed airbag.

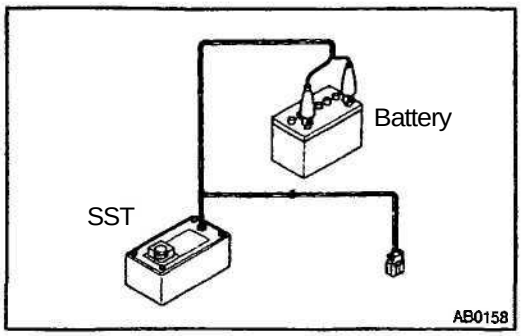

1. AIRBAG DEPLOYMENT WHEN SCRAPPING VEHICLE

HINT:

Have a battery ready as the power source to deploy the airbag.

(a) Check functioning of the SST (See step 1–(a) on page RS–16).
SST 09082–00700

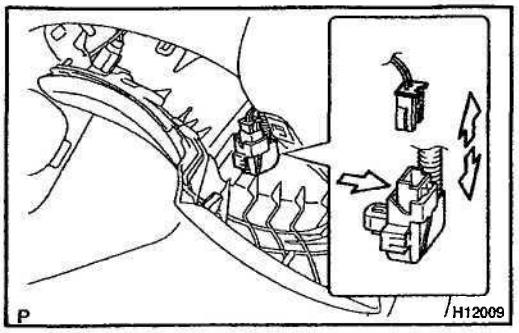

(b) Disconnect the airbag connector.

(1) Using a screwdriver, pry out the glove compartment door finish plate inside the lower panel.

HINT:

Tape the screwdriver tip before use.

(2) Remove the connector from the glove compartment door finish plate.

NOTICE:

When handling the airbag connector, take care not to damage the airbag wire harness.

(3) Disconnect the airbag connector.

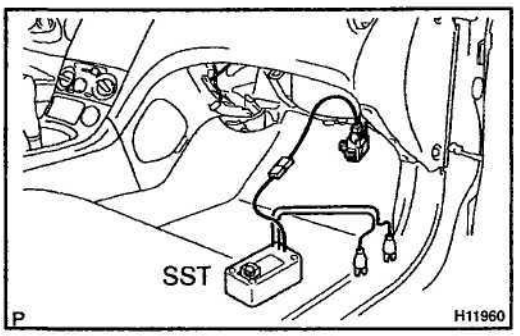

(c) Install the SST.

(1) Connect the connectors of the 2 SST to the front passenger airbag assembly connector.

SST 09082–00700, 09082–00760

NOTICE:

To avoid damaging the SST connector and wire harness, do not lock the secondary lock of the twin lock.

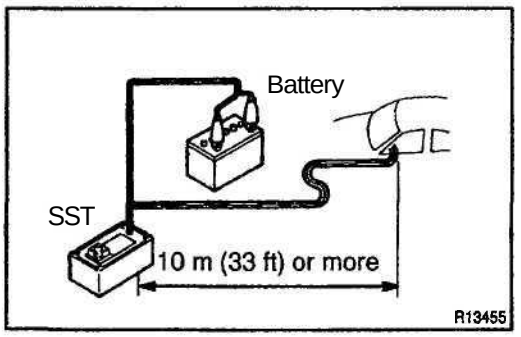

(2) Move the SST to at least 10 m (33 ft) away from the front of the vehicle.

(3) Close all the doors and windows of the vehicle.

NOTICE:

Take care not to damage the SST wire harness.

(4) Connect the SST red clip to the battery positive (+) terminal and the black clip to the negative (-) terminal.

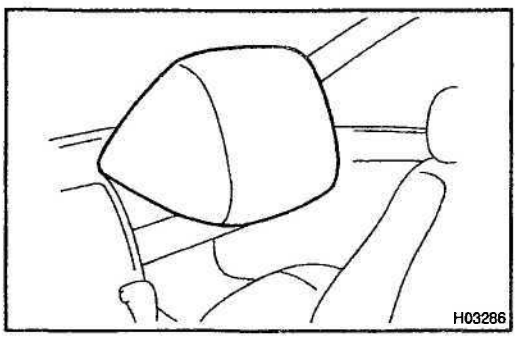

(d) Deploy the airbag.

(1) Check that no one is inside the vehicle or within 10 m (33 ft) area around the vehicle.

(2) Press the SST activation switch and deploy the airbag.

CAUTION:

- **The front passenger airbag assembly is very hot when the airbag is deployed, so leave it alone for at least 30 minutes after deployment.**
- **Use gloves and safety glasses when handling the front passenger airbag assembly with the deployed airbag.**
- **Always wash your hands with water after completing the operation.**
- **Do not apply water, etc. to the front passenger airbag assembly with the deployed airbag.**
- **When scrapping a vehicle, deploy the airbag and scrap the vehicle with the front passenger airbag assembly still installed.**
- **When moving a vehicle for scrapping which has the front passenger airbag assembly with the deployed airbag, use gloves and safety glasses.**

HINT:

The airbag deploys simultaneously as the LED of the SST activation switch lights up.

2. DEPLOYMENT WHEN DISPOSING OF FRONT PASSENGER AIRBAG ASSEMBLY ONLY

NOTICE:

- **When disposing of the front passenger airbag assembly only, never use the customer's vehicle to deploy the airbag.**
- **Be sure to follow the procedure given below when deploying the airbag.**

HINT:

Have a battery ready as the power source to deploy the airbag.

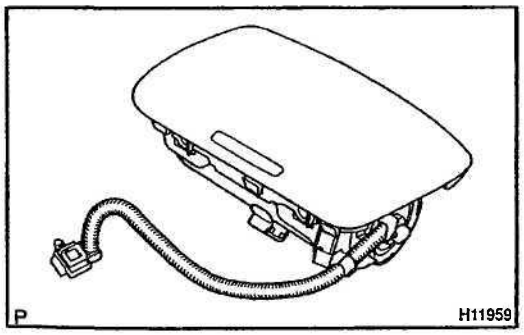

(a) Remove the front passenger airbag assembly (See page RS–27).

CAUTION:

- **When removing the front passenger airbag assembly, work must be started 90 seconds after the ignition switch is turned to the "LOCK" position and the negative (–) terminal cable is disconnected from the battery.**
- **When storing the front passenger airbag assembly, keep the upper surface of the airbag deployment side facing upward.**

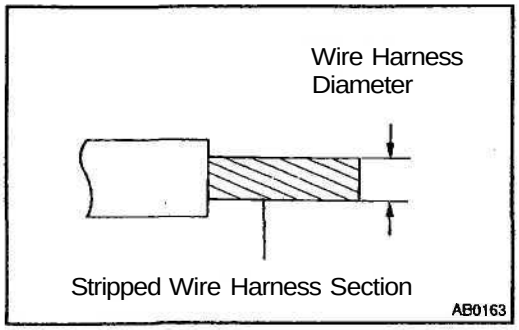

(b) Using a service–purpose wire harness, tie down the front passenger airbag assembly to the tire.

Wire harness: Stripped wire harness section 1.25 mm² or more (0.0019 in.² or more)

CAUTION:

If the front passenger airbag assembly is tied down with too thin wire harness, it may snap. This is highly dangerous. Always use a wire harness which is at least 1.25 mm² (0.0019 in².).

HINT:

To calculate the square of the stripped wire harness section:

Square = 3.14 X (Diameter)² divided by 4

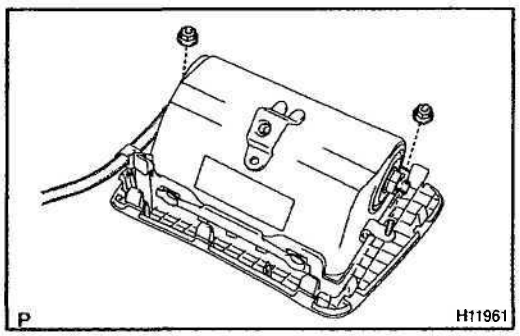

(1) Install the 2 nuts on the front passenger airbag assembly.

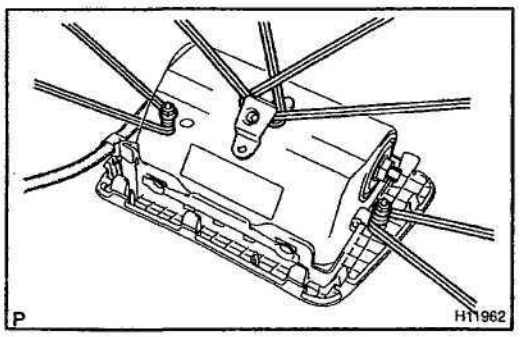

(2) Wind the wire harness around the bolts, and pass the wire harness though the installation holes.

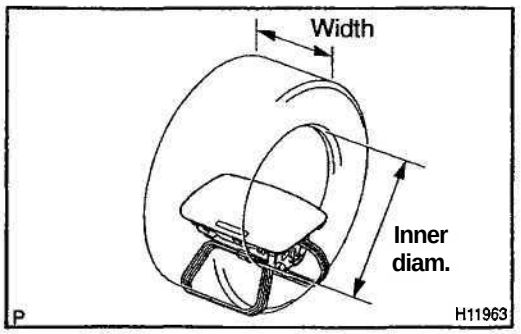

(3) Position the front passenger airbag assembly inside the tire with the airbag deployment side facing inside.

Tire size: Must exceed the following dimensions–
Width: 185 mm (7.28 in.)
Inner diameter: 360 mm (14.17 in.)

CAUTION:

- **Make sure that the wire harness is tight. It is very dangerous if looseness in the wire harness results in the front passenger airbag assembly coming free due to the shock from the airbag deploying.**
- **Always tie down the front passenger airbag assembly with the airbag deployment side facing inside.**

NOTICE:

The tire will be marked by the airbag deployment, so when disposing of the airbag use a redundant tire.

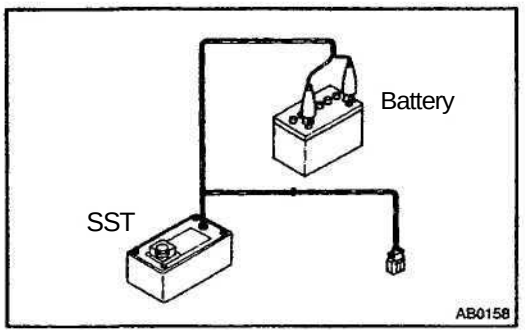

(c) Check functioning of the SST (See step 1–(a) on page RS–16).
SST 09082–00700

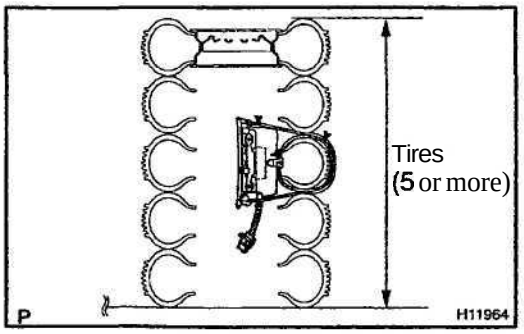

(d) Place the tires.
(1) Place at least 2 tires under the tire to which the front passenger airbag assembly is tied.
(2) Place at least 2 tires over the tire to which the front passenger airbag assembly is tied. The top tire should have the wheel installed.

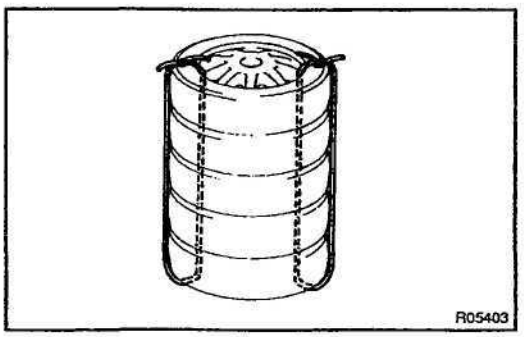

(3) Tie the tires together with 2 wire harness.

CAUTION:

Make sure that the wire harness is tight. It is very dangerous if loose wire harnesses result in the tires coming free due to the shock from the airbag deploying.

HINT:

Place the SST connector and wire harness inside tires. Provide at least 1 m (3 ft) of slack for the wire harness.

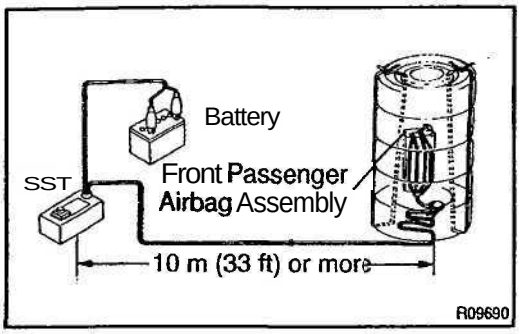

(e) Install the SST.
Connect the connectors of the 2 SST to the front passenger airbag assembly connector.
SST 09082–00700, 09082–00760

NOTICE:

To avoid damaging the SST connector and wire harness, do not lock the secondary lock of the twin lock. Also, secure some slack for the SST wire harness inside the tires.

(f) Deploy the airbag.
(1) Connect the SST red clip to the battery positive (+) terminal and the black clip to the battery negative (-) terminal.
(2) Check that no one is within 10 m (33 ft) area around the tire which the front passenger airbag assembly is tied to.
(3) Press the SST activation switch and deploy the airbag.

HINT:
The airbag deploys simultaneously as the LED of the SST activation switch lights up.

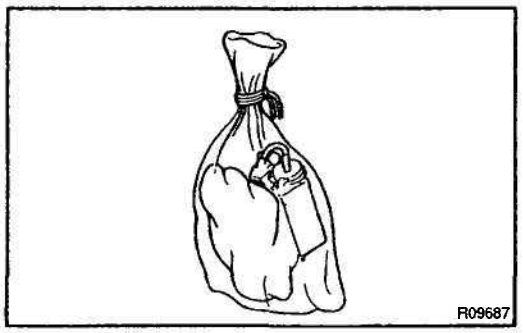

(g) Dispose of the front passenger airbag assembly.

CAUTION:

- **The front passenger airbag assembly is very hot when the airbag is deployed, so leave it alone for at least 30 minutes after deployment.**
- **Use gloves and safety glasses when handling a front passenger airbag assembly with the deployed airbag.**
- **Always wash your hands with water after completing the operation.**
- **Do not apply water, etc. to a front passenger airbag assembly with the deployed airbag.**

(1) Remove the front passenger airbag assembly from the tire.
(2) Place the front passenger airbag assembly in a vinyl bag, tie the end tightly and dispose of it in the same way as other general parts disposal.

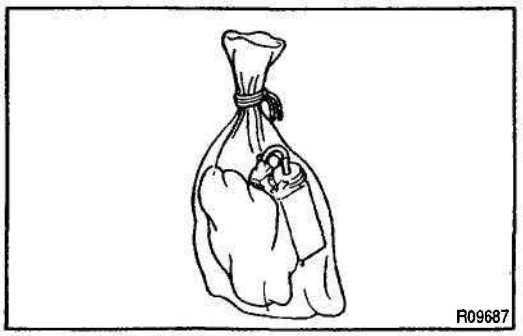

3. DEPLOYMENT WHEN DISPOSING OF FRONT PASSENGER AIRBAG ASSEMBLY WITH AIRBAG DEPLOYED IN COLLISION

Dispose of the front passenger airbag assembly.

CAUTION:

- **The front passenger airbag assembly is very hot when the airbag is deployed, so leave it alone for at least 30 minutes after deployment.**
- **Use gloves and safety glasses when handling a front passenger airbag assembly with the deployed airbag.**
- **Always wash your hands with water after completing the operation.**
- **Do not apply water, etc. to a front passenger airbag assembly with the deployed airbag.**

(1) Remove the front passenger airbag assembly from the instrument panel (See page RS–27).

(2) Place the front passenger airbag assembly in a vinyl bag, tie the end tightly and dispose of it in the same way so as other general parts disposal.

RS0K0-01

REPLACEMENT

REPLACEMENT REQUIREMENTS

In the following cases, replace the front passenger airbag assembly, instrument panel or instrument panel reinforcement.

Case	Replacing part
If the airbag has been deployed.	Front passenger airbag assembly
If the front passenger airbag assembly has been found to be faulty in trouble-shooting.	Front passenger airbag assembly
If the front passenger airbag assembly has been found to be faulty during checking items (See page RS–28).	Front passenger airbag assembly
If the instrument panel has been found to be faulty during checking items (See page RS–28).	Instrument panel
If the instrument panel reinforcement has been found to be faulty during checking items (See page RS–28).	Instrument panel reinforcement
If the front passenger airbag assembly has been dropped.	Front passenger airbag assembly

CAUTION:

For replacement of the front passenger airbag assembly, see page RS–27 and RS–38. Be sure to follow the correct procedure.

RS0K1-01

INSTALLATION

NOTICE:

Never use airbag parts from another vehicle. When replacing parts, replace them with new parts.

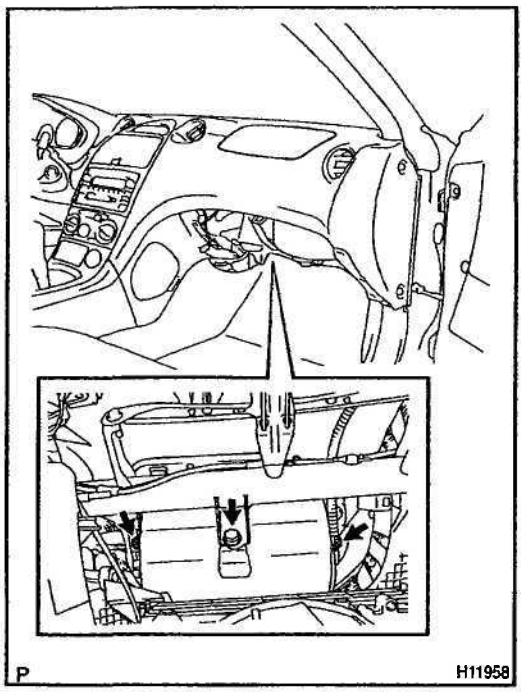

1. INSTALL FRONT PASSENGER AIRBAG ASSEMBLY

(a) Install the front passenger airbag assembly with the 2 nuts.

(b) Install the bolt.

Torque: 20 N·m (205 kgf·cm, 15 ft·lbf)

CAUTION:

- **When installing the front passenger airbag assembly, take care that the wiring does not interfere with other parts and is not pinched between other parts.**
- **Make sure that no foreign objects are trapped between the airbag bag and within the module.**

NOTICE:

If the front passenger airbag assembly has been dropped, or there are cracks, dents or other defects in the case or connector, replace the front passenger airbag assembly with a new one.

(c) Install the airbag wire harness clamp.

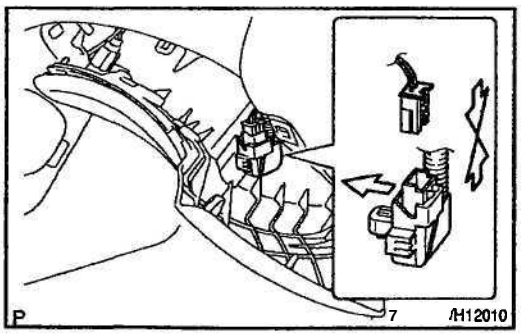

2. CONNECT AIRBAG CONNECTOR

(a) Connect the airbag connector.

(b) Install the connector cover to the lower finish panel.

(c) Install the lower finish panel with the 3 screws and 2 bolts.

SIDE AIRBAG ASSEMBLY

COMPONENTS

RS0K2-01

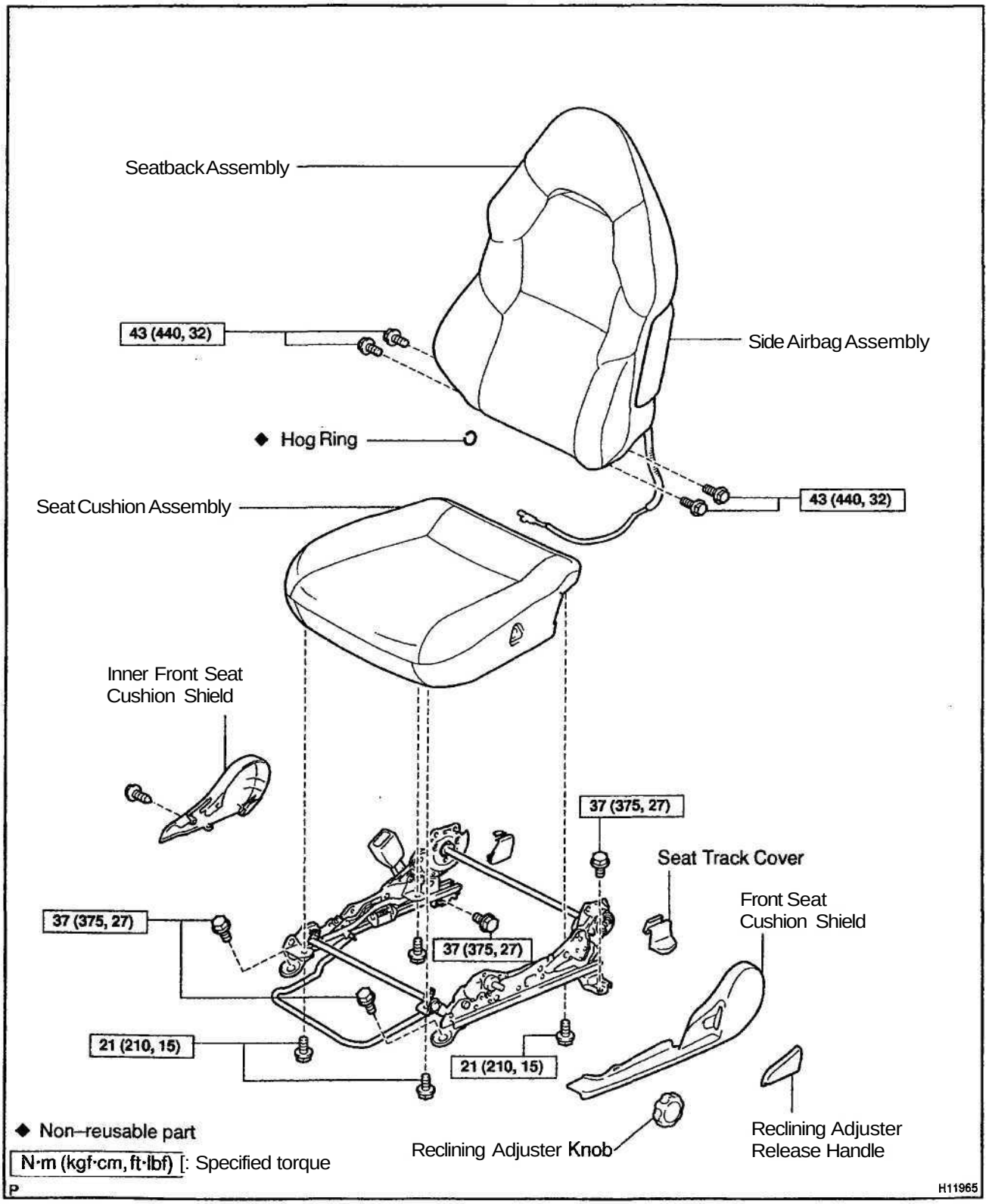

RS0K3-01

REMOVAL

NOTICE:

- **If the wiring connector of the SRS is disconnected and the ignition switch is at ON position, DTCs will be recorded.**
- **Never use the airbag parts from another vehicle. When replacing parts, replace them with new parts.**

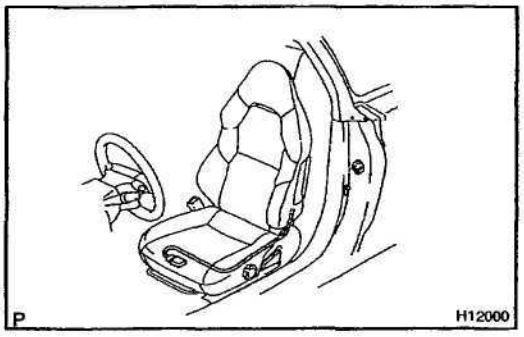

1. REMOVE FRONT SEAT

(a) Remove the 2 seat track covers and 4 bolts.

(b) Disconnect the side airbag connector.

NOTICE:

When handling the airbag connector, take care not to damage the airbag wire harness.

(c) Remove the front seat.

2. REMOVE RECLINING ADJUSTER RELEASE HANDLE

3. REMOVE RECLINING ADJUSTER KNOB

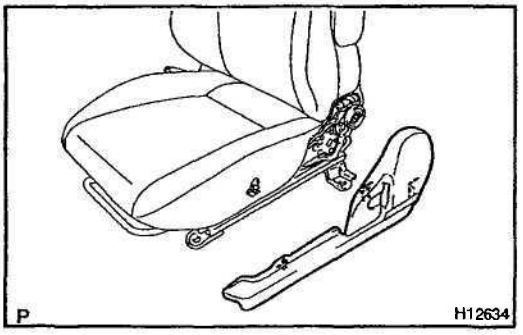

4. REMOVE FRONT SEAT CUSHION SHIELD

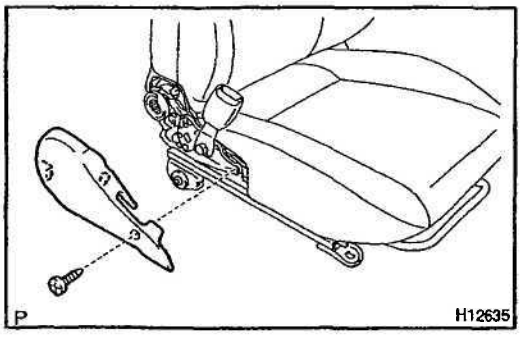

5. REMOVE INNER FRONT SEAT CUSHION SHIELD

Remove the screw and inner front seat cushion shield

6. REMOVE SEAT CUSHION ASSEMBLY

(a) Remove the wire harness from the seat cushion assembly.

NOTICE:

When handling the airbag wire harness, take care not to damage the airbag wire harness.

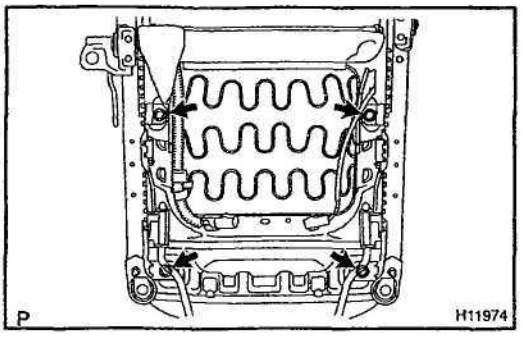

(b) Remove the 4 bolts and seat cushion assembly.

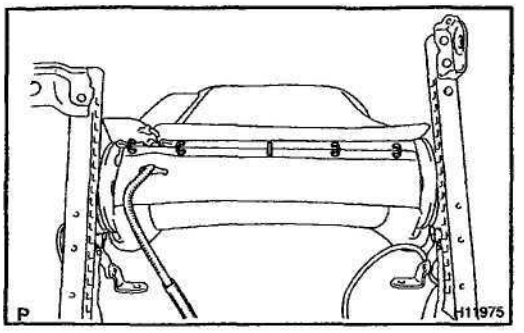

7. REMOVE SEATBACK ASSEMBLY

(a) Remove the hog rings of the seatback frame, as shown in the illustration.

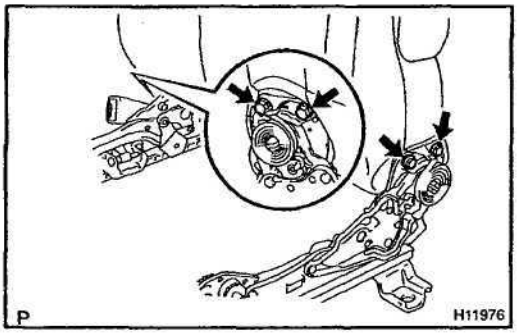

(b) Remove the 4 bolts and seatback assembly.

CAUTION:

Do not store the seatback assembly with the airbag deployment side facing downward.

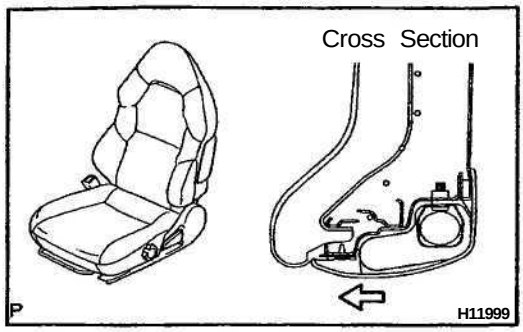

RS0R4-01

INSPECTION

1. Vehicles not involved in collision:
INSPECT SUPPLEMENTAL RESTRAINT SYSTEM

(a) Do a diagnostic system check (See page DI–326).

(b) Do a visual check which includes the following item with the seatback assembly installed in the vehicle.
Check that there are no cuts and cracks of the outside of side airbag assembly.

2. Vehicle involved in a collision and airbag is not deployed:
INSPECT SUPPLEMENTAL RESTRAINT SYSTEM

(a) Do a diagnostic system check (See page DI-326).

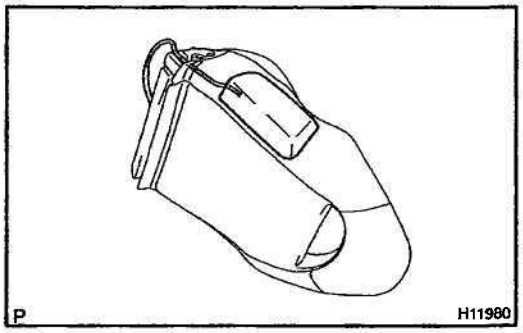

(b) Do a visual check which includes the following items with the seatback assembly removed from the vehicle.
- Check cuts and cracks of the side airbag assembly.
- Check cuts and cracks in wire harness, and chipping in connectors.

CAUTION:
For removal and installation of the seatback assembly, see page RS–40 and RS–50. Be sure to follow the correct procedure.

3. Vehicle involved in a collision and airbag is deployed:
INSPECT SUPPLEMENTAL RESTRAINT SYSTEM

(a) Do a diagnostic system check (See page DI–326).

(b) Do a visual check which includes the following items with the seatback assembly removed from the vehicle.
- Check the seatback installation part of the seat adjuster.
- Check the damage to the connector and wire harness.

CAUTION:
For removal and installation of the seatback assembly, see page RS–40 and RS–50. Be sure to follow the correct procedure.

HINT:
If the seat adjuster is deformed, never repair it. Always replace it with new one.

RS0K5-01

DISPOSAL

HINT:

When scrapping vehicles equipped with an SRS or disposing of the side airbag assembly always first deploy the airbag in accordance with the procedure described below. If any abnormality occurs with the airbag deployment, contact the SERVICE DEPT. of TOYOTA MOTOR SALES, U.S.A., INC.

CAUTION:

- **Never dispose of a side airbag assembly which has an undeployed airbag.**
- **The airbag produces a sizeable exploding sound when it deploys, so perform the operation out–of–doors and where it will not create a nuisance to nearby residents.**

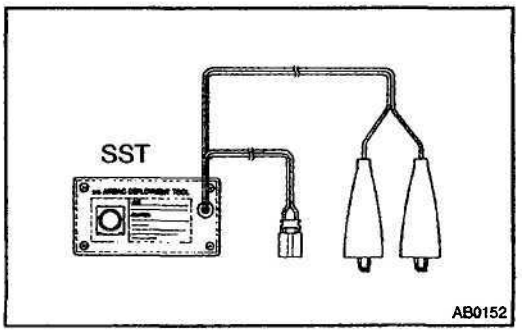

- **When deploying the airbag, always use the specified SST (SRS Airbag Deployment Tool), perform the operation in a place away from electrical noise.**
  SST 09082–00700
- **When deploying an airbag, perform the operation at least 10 m (33 ft) away from the airbag assembly.**
- **The side airbag assembly is very hot when the airbag is deployed, so leave it alone for at least 30 minutes after deployment.**
- **Use gloves and safety glasses when handling side airbag assembly with the deployed airbag.**
- **Always wash your hands with water after completing the operation.**
- **Do not apply water, etc. to a side airbag assembly with the deployed airbag.**

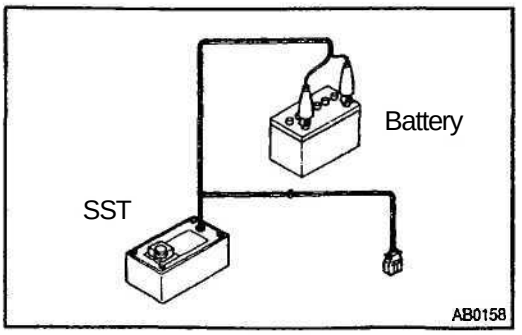

1. AIRBAG DEPLOYMENT WHEN SCRAPPING VEHICLE

HINT:

Have a battery ready as the power source to deploy the airbag.

(a) Check functioning of the SST (See step 1–(a) on page RS–16).
SST 09082–00700

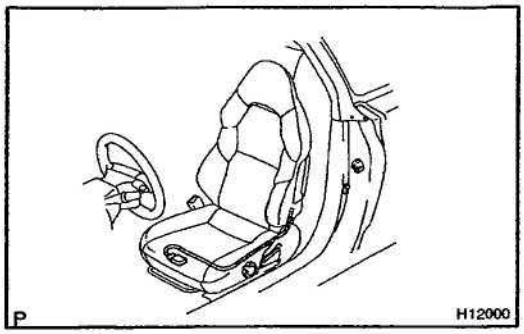

(b) Disconnect the side airbag connector.

NOTICE:

When handling the airbag connector, take care not to damage the airbag wire harness.

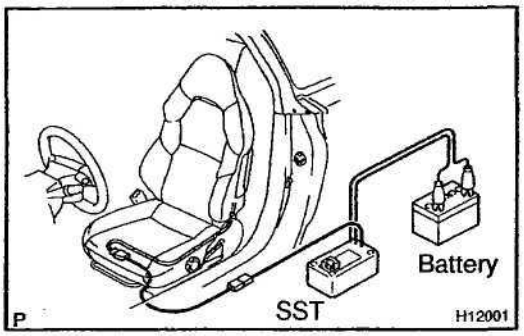

(c) Install the SST.

(1) Connect the connectors of the 2 SST to the airbag connector.

SST 09082–00700, 09082–00750

NOTICE:

To avoid damaging the SST connector and wire harness, do not lock the secondary lock of the twin lock.

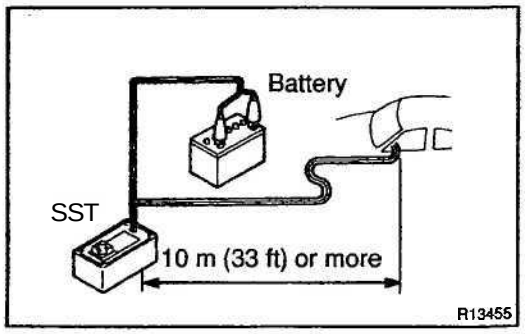

(2) Move the SST at least 10 m (33 ft) away from the front of the vehicle.

(3) Close all the doors and windows of the vehicle.

NOTICE:

Take care not to damage the SST wire harness.

(4) Connect the SST red clip to the battery positive (+) terminal and the black clip to the battery negative (-) terminal.

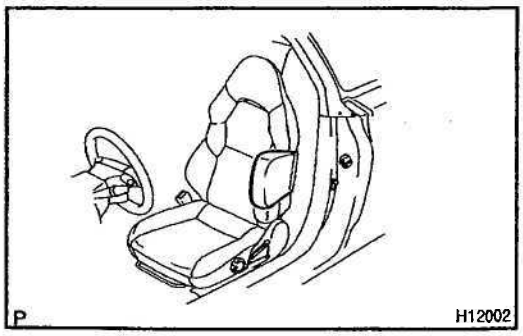

(d) Deploy the airbag.

(1) Check that no one is inside the vehicle or within 10 m (33 ft) area around the vehicle.

(2) Press the SST activation switch and deploy the airbag.

CAUTION:

- **The side airbag assembly is very hot when the airbag is deployed, so leave it alone for at least 30 minutes after deployment.**
- **Use gloves and safety glasses when handling the side airbag assembly with the deployed airbag.**
- **Do not apply water, etc. to the side airbag assembly with the deployed airbag.**
- **Always wash your hands with water after completing the operation.**
- **When scrapping a vehicle, deploy the airbag and scrap the vehicle with the side airbag assembly still installed.**

HINT:

The airbag deploys simultaneously as the LED of SST activation switch lights up.

2. DEPLOYMENT WHEN DISPOSING OF SIDE AIRBAG ASSEMBLY

NOTICE:

- **When disposing of the side airbag assembly only, never use the customer's vehicle to deploy the airbag.**
- **Be sure to follow the procedure given below when deploying the airbag.**

HINT:

Have a battery ready as the power source to deploy the airbag.

(a) Remove the seatback assembly (See page RS–40).

(b) Open the fastener of the seatback cover.

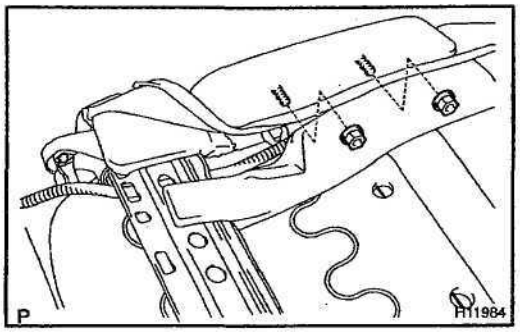

(c) Remove the side airbag assembly from the seatback assembly.

CAUTION:

When storing the side airbag assembly, keep the upper surface of the airbag deployment side facing upward.

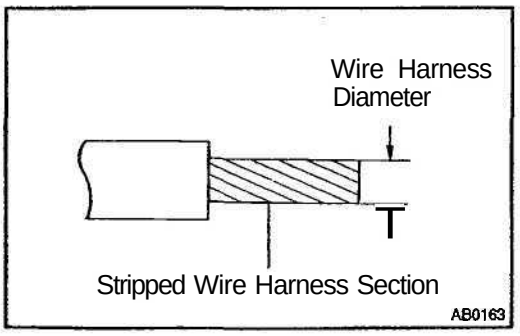

(d) Using a service–purpose wire harness, tie down the side airbag assembly to the tire.

Wire harness: Stripped wire harness section 1.25 mm^2 or more (0.0019 in^2. or more)

CAUTION:

If a wire harness which is too thin or some other thing is used to tie down the side airbag assembly, it may be snapped by the shock when the airbag is deployed. This is highly dangerous. Always use a wire harness for vehicle use which is at least 1.25 mm^2 (0.0019 in^2.).

HINT:

To calculate the square of the stripped wire harness section–

Square = 3.14 x $(Diameter)^2$ divided by 4

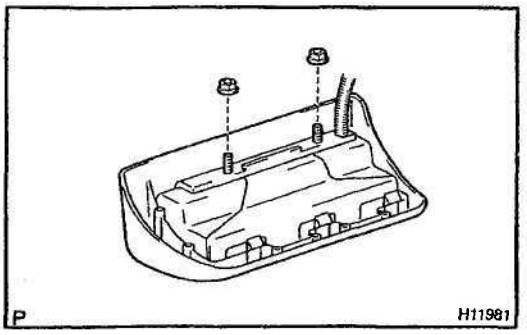

(1) Install the 2 nuts to the side airbag assembly.

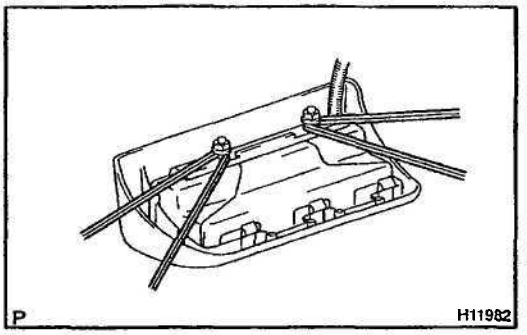

(2) Wind the wire harness around the stud bolts of the side airbag assembly as shown in the illustration.

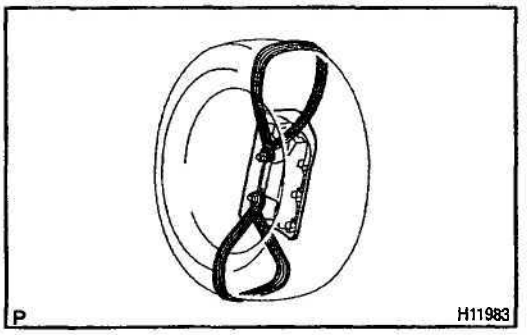

(3) Position the side airbag assembly inside the tire with the airbag deployment direction facing inside.

Tire size: Must exceed the following dimensions–
Width: 185 mm (7.28 in.)
Inner diameter: 360 mm (14.17 in.)

CAUTION:

- **Make sure the wire harness is tight. It is very dangerous when a loose wire harness results in the side airbag assembly coming free due to the shock from the airbag deploying.**
- **Always tie down the side airbag assembly with the airbag deployment side facing inside.**

NOTICE:

The tire will be marked by the airbag deployment, so when disposing of the airbag use a redundant tire.

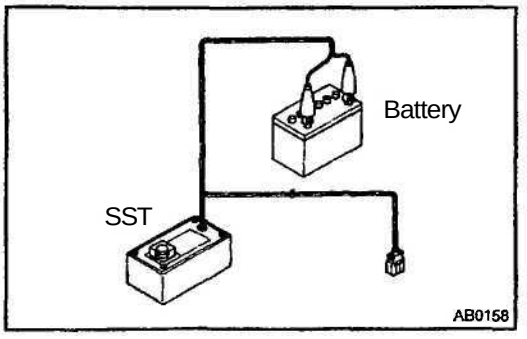

(e) Check functioning of the SST (See step **1–(a)** on page **RS–16**).
SST 09082–00700

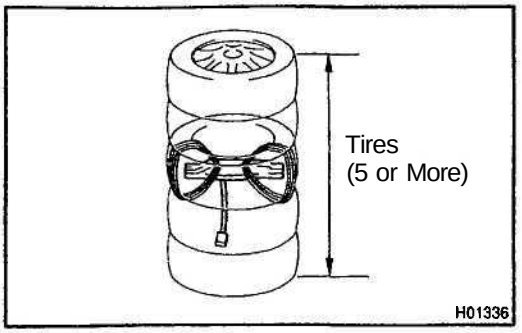

(f) Place the tires.
(1) Place at least 2 tires under the tire to which the side airbag assembly is tied.
(2) Place at least 2 tires over the tire to which the side airbag assembly is tied. The top tire should have the wheel installed.

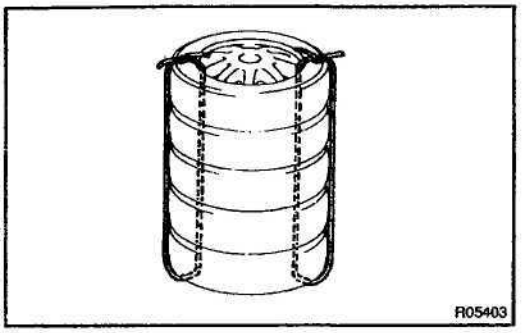

(3) Tie the tires together with 2 wire harness.

CAUTION:

Make sure that the wire harness are tight. It is very dangerous when loose wire harness results in the tires coming free due to the shock from the airbag deploying.

HINT:

Place the SST connector and wire harness inside tires. Secure at least 1 m (3 ft) of slack for the wire harness.

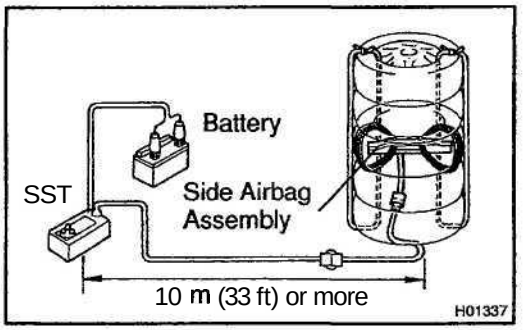

(g) Install the SST.

Connect the connectors of the 2 SST to the side airbag assembly connector.

SST 09082–00700, 09082–00750

NOTICE:

To avoid damaging the SST connector and wire harness, do not lock the secondary lock of the twin lock. Also, secure some slack for the SST wire harness inside the tire.

(h) Deploy the airbag.
(1) Connect the SST red clip to the battery positive (+) terminal and the black clip to the battery negative (-) terminal.
(2) Check that no one is within 10 m (33 ft) area around the tire which the side airbag assembly is tied to.
(3) Press the SST activation switch and deploy the airbag.

HINT:

The airbag deploys simultaneously as the LED of the SST activation switch lights up.

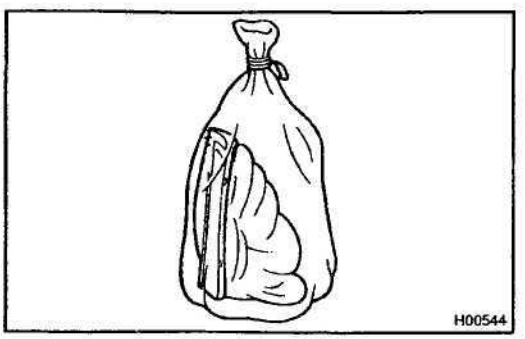

(i) Dispose of the side airbag assembly.

CAUTION:

- **The side airbag assembly is very hot when the airbag is deployed, so leave it alone for at least 30 minutes after deployment.**
- **Use gloves and safety glasses when handling a side airbag assembly with the deployed airbag.**
- **Do not apply water etc. to a side airbag assembly with the deployed airbag.**

- **Always wash your hands with water after completing the operation.**

(1) Remove the side airbag assembly from the tire.
(2) Place the side airbag assembly in a vinyl bag, tie the end tightly and dispose of it in the same way as other general parts disposal.

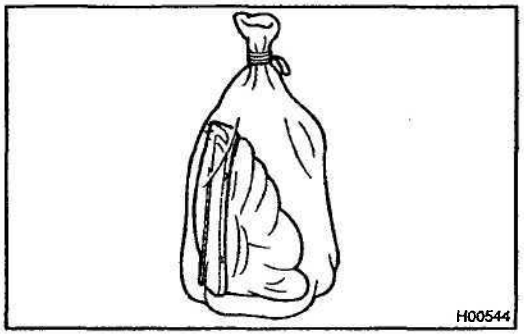

3. DEPLOYMENT WHEN DISPOSING OF SIDE AIRBAG ASSEMBLY WITH AIRBAG DEPLOYED IN COLLISION

Dispose of the side airbag assembly.

CAUTION:

- **The side airbag assembly is very hot when the airbag is deployed, so leave it alone for at least 30 minutes after deployment.**
- **Use gloves and safety glasses when handling a side airbag assembly with the deployed airbag.**
- **Do not apply water etc. to a side airbag assembly with the deployed airbag.**
- **Always wash your hands with water after completing the operation.**

(1) Remove the side airbag assembly from the seat (See page RS–40 and see step 2).
(2) Place the side airbag assembly in a vinyl bag, tie the end tightly and dispose of it in the same way as other general parts disposal.

RS0KS-01

REPLACEMENT

REPLACEMENT REQUIREMENTS

In the following cases, replace the seatback assembly.

Case	Replacing part
If the side airbag has been deployed.	Seatback assembly
If the side airbag assembly has been found to be faulty in troubleshooting.	Seatback assembly
If the side airbag assembly has cuts during checking items (See page RS–42).	Seatback assembly
If the side airbag assembly has been found to be faulty during checking items (See page RS–42).	Seatback assembly
If the seatback assembly has been dropped.	Seatback assembly

CAUTION:

For removal and installation of the seatback assembly, see page RS–40 and RS–50. Be sure to follow the correct procedure.

RS0K7-01

INSTALLATION

NOTICE:

Never use airbag parts from another vehicle. When replacing parts, replace them with new parts.

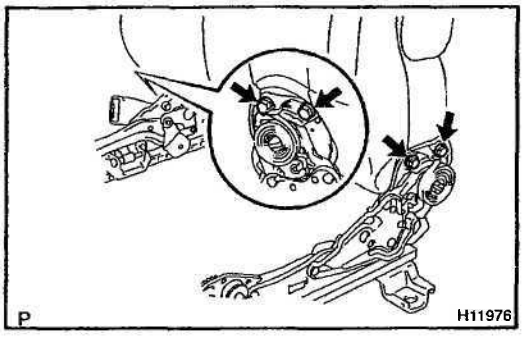

1. INSTALL SEATBACK ASSEMBLY

(a) Install the seatback assembly to the seat adjuster with the 4 bolts.

Torque: 43 N·m (440 kgf cm, 32 ft·lbf)

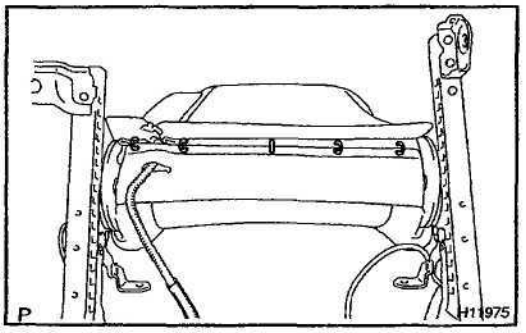

(b) Install 5 new hog rings.

HINT:

When installing the hog rings, take care to prevent wrinkles as little as possible.

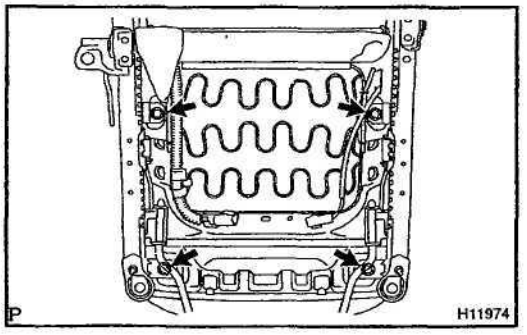

2. INSTALL SEAT CUSHION ASSEMBLY

(a) Install the seat cushion assembly with the 4 bolts.

Torque: 21 N·m (210 kgf cm, 15 ft·lbf)

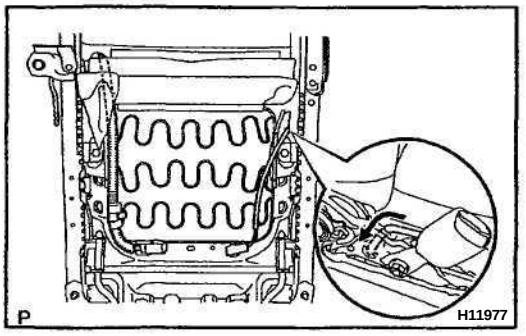

(b) Install the wire harness to the seat cushion assembly.

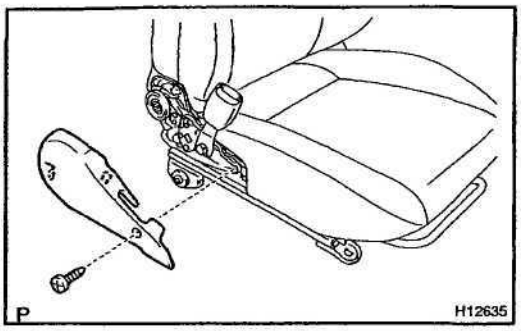

3. INSTALL INNER FRONT SEAT CUSHION SHIELD

Install the inner front seat cushion shield with the screw.

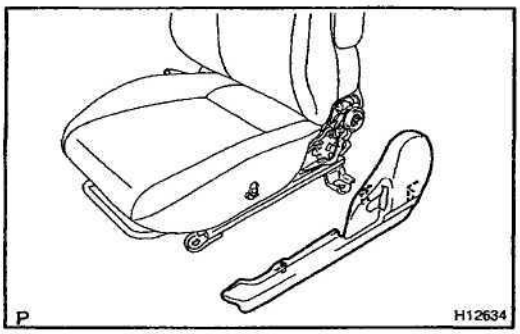

4. INSTALL FRONT SEAT CUSHION SHIELD

5. INSTALL RECLINING ADJUSTER KNOB

6. INSTALL RECLINING ADJUSTER RELEASE HANDLE

7. INSTALL FRONT SEAT

NOTICE:

When mounting the seat to the vehicle, take care not to damage the airbag wire harness.

(a) Connect the side airbag connector.

(b) Slide the front seat to the most front position.

NOTICE:

Make sure that seat adjuster locks.

(c) Without holding the seat track handle, mount the seat to the vehicle.

HINT:

If holding the seat track handle, the adjusted rearmost position slip off.

(d) Tighten the bolts on the front side temporarily, from the bolt on the inner side tighten them completely.

Torque: 37 N·m (375 kgf-cm, 27 tt-lbf)

(e) Slide the seat to the most front position to install the bolts on the rear side.

Torque: 37 N·m (375 kgf·cm, 27 ft·lbf)

(f) Install the 2 seat track covers.

AIRBAG SENSOR ASSEMBLY

COMPONENTS

RS0K8-01

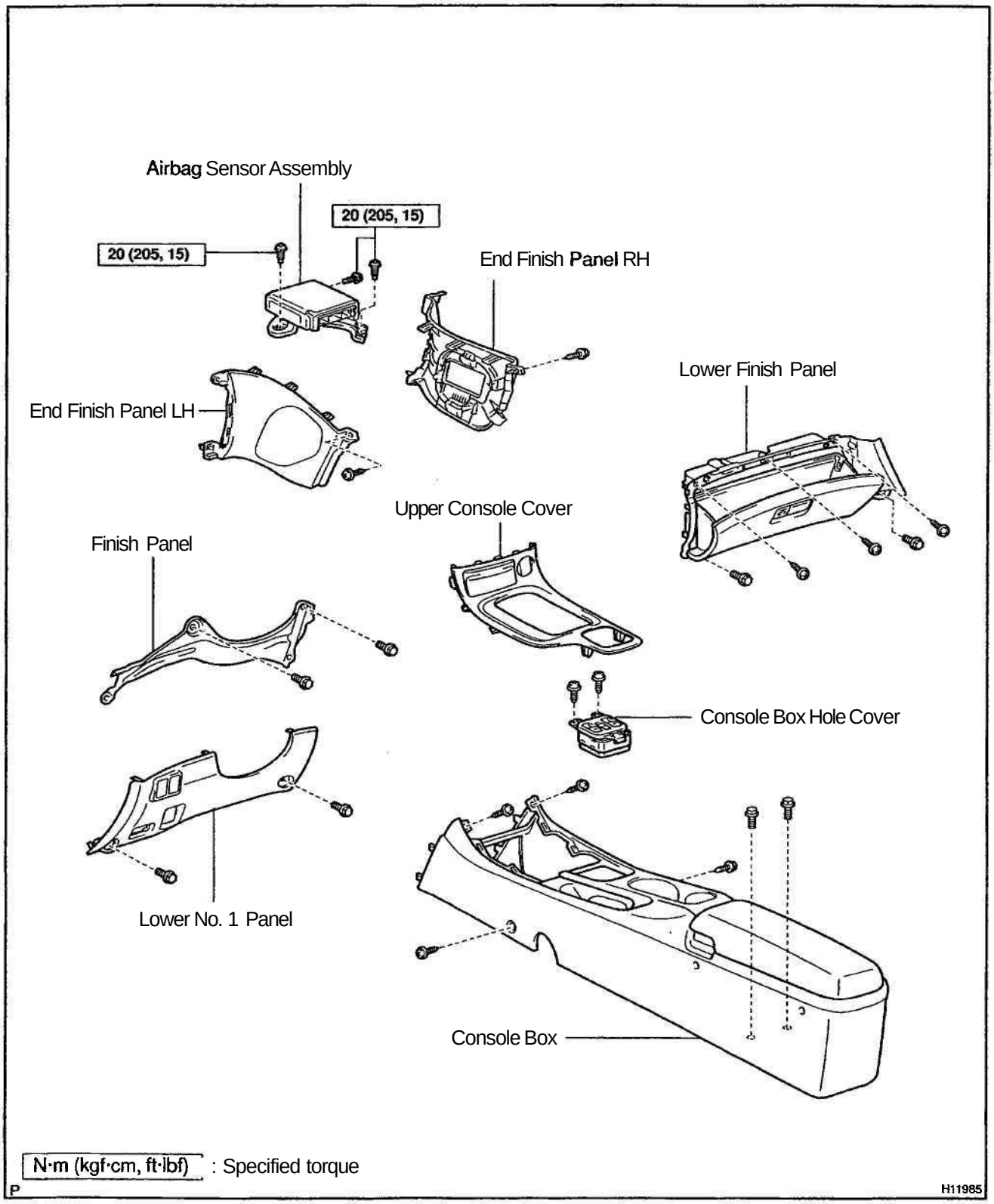

RS0K9-01

REMOVAL

NOTICE:

Do not open the cover or the case of the ECU and various electrical devices unless absolutely necessary.
(If the IC terminals are touched, the IC may be destroyed by static electricity.)

HINT:

For step 1 to 8, refer to page BO–79.

1. **REMOVE LOWER FINISH PANEL**
2. **REMOVE LOWER NO. 1 PANEL**
3. **REMOVE FINISH PANEL**
4. **REMOVE UPPER CONSOLE COVER**
5. **REMOVE CONSOLE BOX HOLE COVER**
6. **REMOVE CONSOLE BOX**
7. **REMOVE END FINISH PANEL LH**
8. **REMOVE END FINISH PANEL RH**

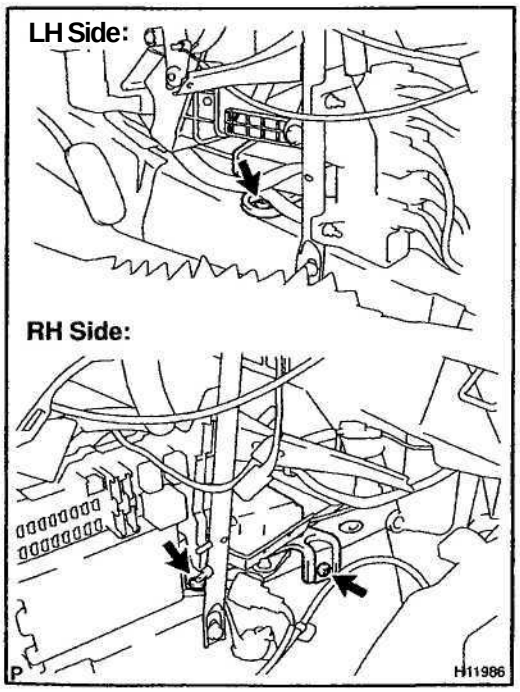

9. **REMOVE AIRBAG SENSOR ASSEMBLY**

(a) Disconnect the airbag sensor connectors.

NOTICE:

Disconnect the connectors with the airbag sensor assembly installed.

(b) Using a torx wrench, remove the 3 screws and airbag sensor assembly.

Torx wrench: T40 (Part No.09042–00020 or locally manufactured tool)

INSPECTION

1. VEHICLE NOT INVOLVED IN COLLISION

Do a diagnostic system check (See page DI–326).

2. VEHICLE INVOLVED IN COLLISION AND AIRBAG IS NOT DEPLOYED

Do a diagnostic system check (See page DI–326).

3. VEHICLE INVOLVED IN COLLISION AND AIRBAG IS DEPLOYED

Replace the airbag sensor assembly (See page DI-326).

REPLACEMENT

REPLACEMENT REQUIREMENTS

In the following cases, replace the airbag sensor assembly.

- If the SRS has been deployed in a collision.
- If the airbag sensor assembly has been found to be faulty in troubleshooting.
- If the airbag sensor assembly has been dropped.

CAUTION:

For removal and installation of the airbag sensor assembly, see page RS–53 and RS–56. Be sure to follow the correct procedure.

RS0KC-01

INSTALLATION

NOTICE:

- **Never use SRS parts from another vehicle. When replacing parts, replace them with new parts.**
- **Never reuse the airbag sensor assembly involved in a collision when the airbag has deployed.**
- **Never repair a sensor in order to reuse it.**

HINT:

For step 2 to 9, refer to page BO-85.

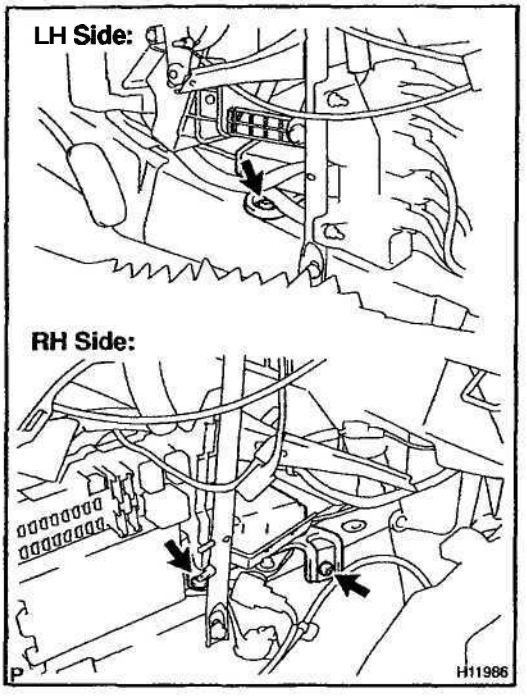

1. INSTALL AIRBAG SENSOR ASSEMBLY

(a) Using a torx wrench, install the airbag sensor assembly with the 3 screws.

Torx wrench: T40 (Part No.09042-00020 or locally manufactured tool)

Torque: 20 N·m (205 kgf·cm, 15 ft·lbf)

(b) Connect the airbag sensor connectors.

NOTICE:

- **Connection of the connector is done after the sensor assembly has been installed.**
- **Make sure the sensor assembly is installed with the specified torque.**
- **If the sensor assembly has been dropped, or there are cracks, dents or other defects in the case, bracket or connector, replace the sensor assembly with a new one.**
- **When installing the senor assembly, take care that the SRS wiring does not interfere with other parts and is not pinched between other parts.**
- **After installing, shake the sensor assembly to check that there is no looseness.**

2. INSTALL END FINISH PANEL RH
3. INSTALL END FINISH PANEL LH
4. INSTALL CONSOLE BOX
5. INSTALL CONSOLE BOX HOLE COVER
6. INSTALL UPPER CONSOLE COVER
7. INSTALL FINISH PANEL
8. INSTALL LOWER NO. 1 PANEL
9. INSTALL LOWER FINISH PANEL

FRONT AIRBAG SENSOR

COMPONENTS

RS0KD–01

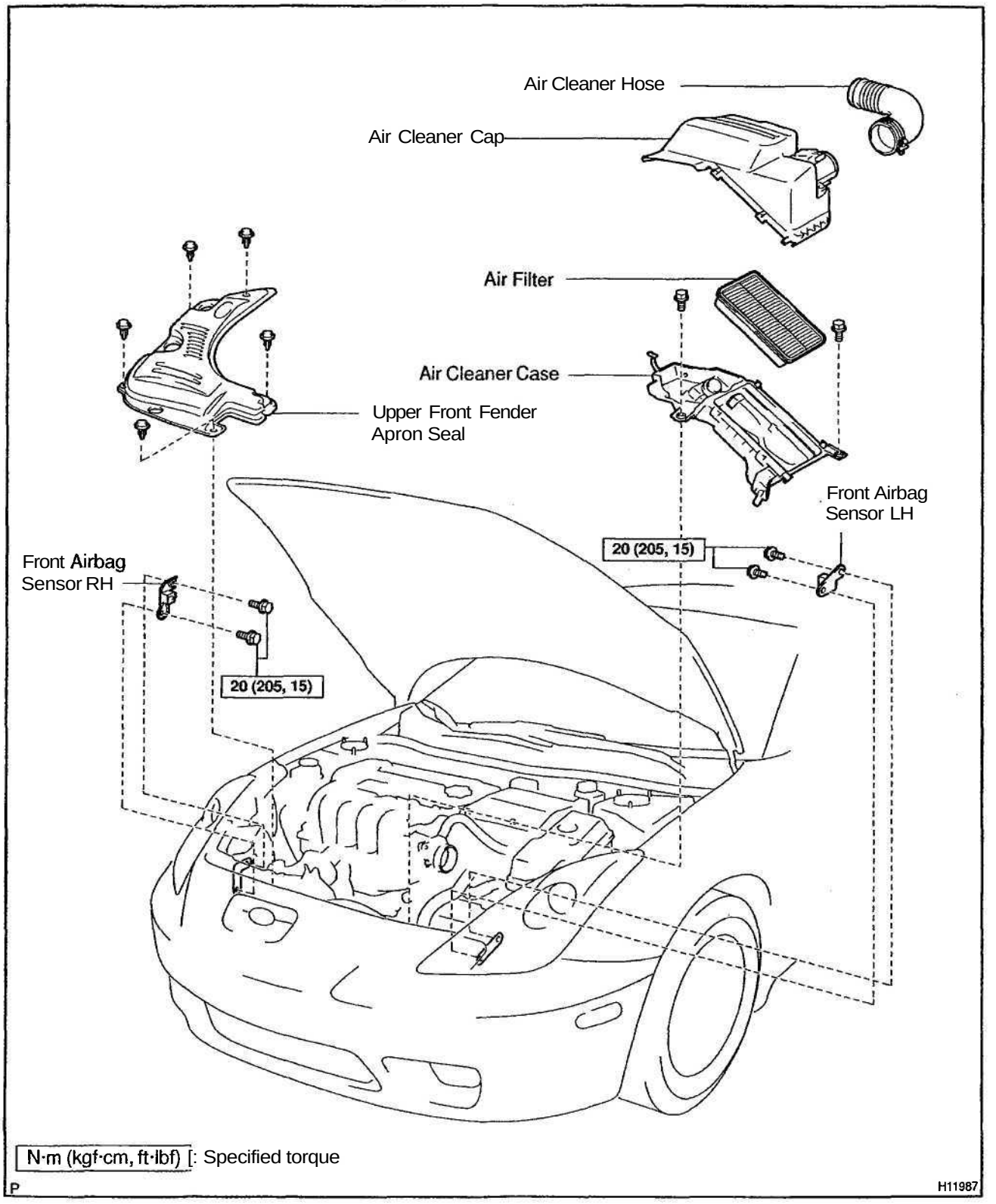

RS0KE-01

REMOVAL

NOTICE:

- **If the wiring connector of the SRS is disconnected with the ignition switch at ON position, DTCs will be recorded.**
- **Never use SRS parts from another vehicle. When replacing parts, replace them with new parts.**
- **Never reuse the sensor involved in a collision when the SRS has deployed.**
- **Never repair a sensor in order to reuse it.**

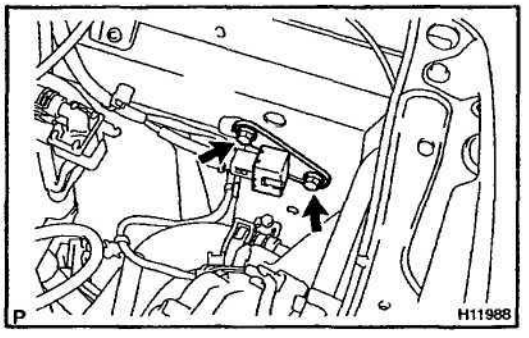

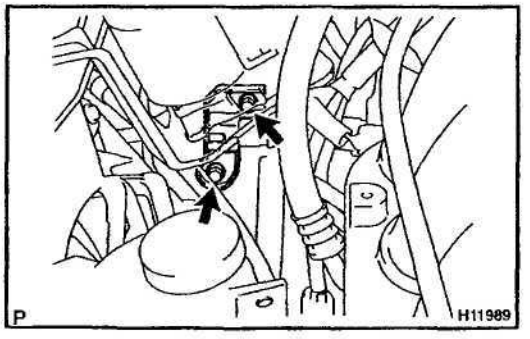

1. LH:

REMOVE FRONT AIRBAG SENSOR

(a) Remove the air cleaner hose.
(b) Remove the air cleaner cap.
(c) Remove the air filter.
(d) Remove the 2 bolts and air cleaner case.
(e) Disconnect the connector.

NOTICE:

Disconnect the connector with sensor assembly installed.

(f) Remove the 2 bolts and front airbag sensor LH.

2. RH:

REMOVE FRONT AIRBAG SENSOR

(a) Remove the 5 clips and upper front fender apron seal.
(b) Disconnect the connector.

NOTICE:

Disconnect the connector with sensor assembly installed.

(c) Remove the 2 bolts and front airbag sensor RH.

RS0KF-01

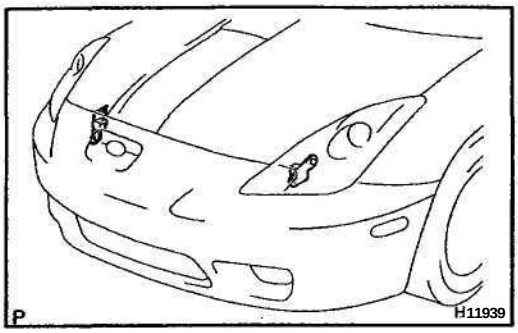

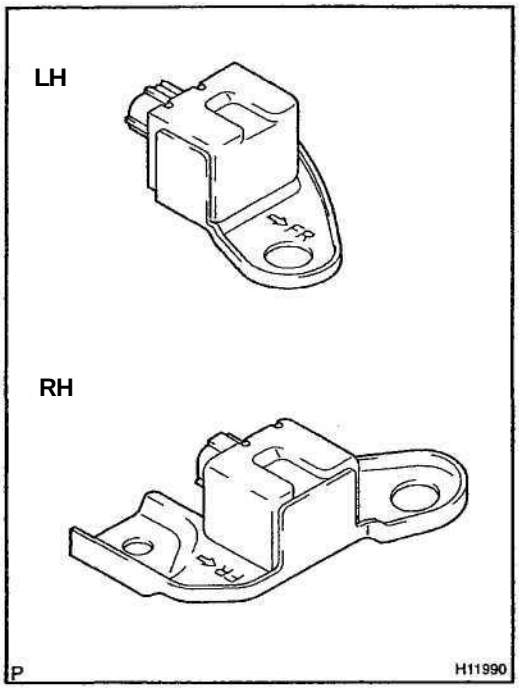

INSPECTION

1. VEHICLES NOT INVOLVED IN COLLISION

Do a diagnostic system check (See page DI–326).

2. VEHICLES INVOLVED IN COLLISION

(a) Do a diagnostic system check (See page DI–326).

(b) If the front fender of the car or its periphery is damaged, do a visual check for damage to the front airbag sensor, which includes the following items even if the airbag was not deployed:

- Check the bracket deformation.
- Check the paint peeling off the bracket.
- Check the cracks, dents or chips in the case.
- Check the cracks, dents, chipping and scratches in the connector.
- Check the peeling off of the label or damage to the serial number.

REPLACEMENT

REPLACEMENT REQUIREMENTS

In the following cases, replace the front airbag sensor.

- If the SRS has been deployed in a collision. (Replace both the left and right airbag sensors.)
- If the front airbag sensor has been found to be faulty in troubleshooting.
- If the front airbag sensor has been found to be faulty during checking items (See page RS–59)
- If the front airbag sensor has been dropped.

CAUTION:

For removal and installation of the front airbag sensor, see page RS–58 and RS–61. Be sure to follow the correct procedure.

RS0401-01

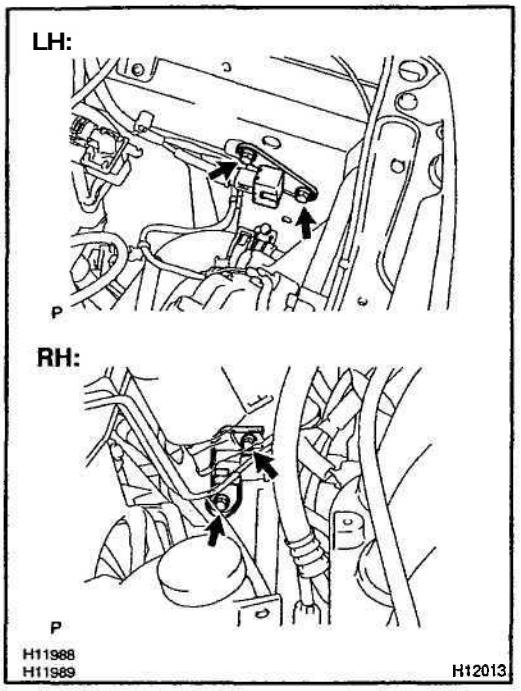

INSTALLATION

1. INSTALL FRONT AIRBAG SENSOR LH AND RH

(a) Install the front airbag sensors with the 4 bolts.
Torque: 20 N·m (205 kgf cm, 15 ft·lbf)

(b) Connect the front airbag sensor connector.

NOTICE:

- **Connection of the connector is done after the sensor assembly has been installed.**
- **Make sure the sensor is installed with the specified torque.**
- **If the sensor has been dropped, or there are cracks, dents or other defects in the case, brackets or connector, replace the removed sensor with a new one.**
- **The front sensor is equipped with an electrical connection check mechanism. Be sure to lock this mechanism securely when connecting the connector. If the connector is not securely locked, a malfunction code will be detected by the diagnostic system.**

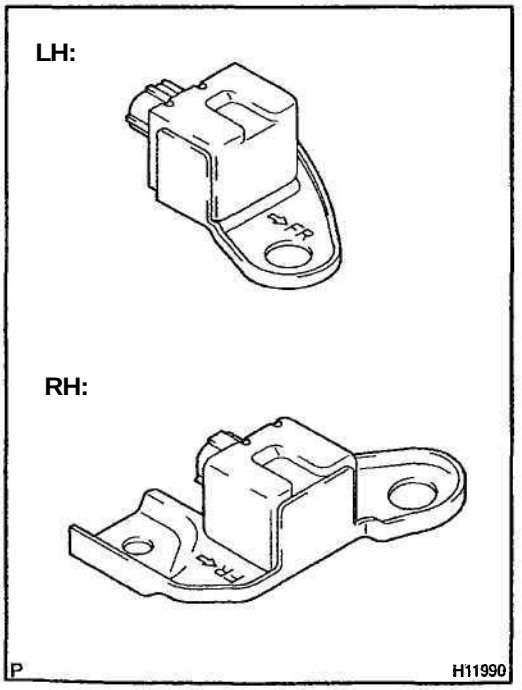

HINT:

Install the front airbag sensor with the arrow on the sensor facing toward the front of the vehicle.

2. INSTALL HEAD LIGHT

Install head lights with the 4 bolts and 2 screws (See page BE-20).

3. INSTALL AIR CLEANER CASE

Install the air cleaner case with the 2 bolts.

4. INSTALL AIR FILTER

5. INSTALL AIR CLEANER CAP

6. INSTALL AIR CLEANER HOSE

7. INSTALL UPPER FRONT FENDER APRON SEAL

Install the upper front fender apron seal with the 5 clips.

SIDE AIRBAG SENSOR ASSEMBLY

COMPONENTS

RS0KI-01

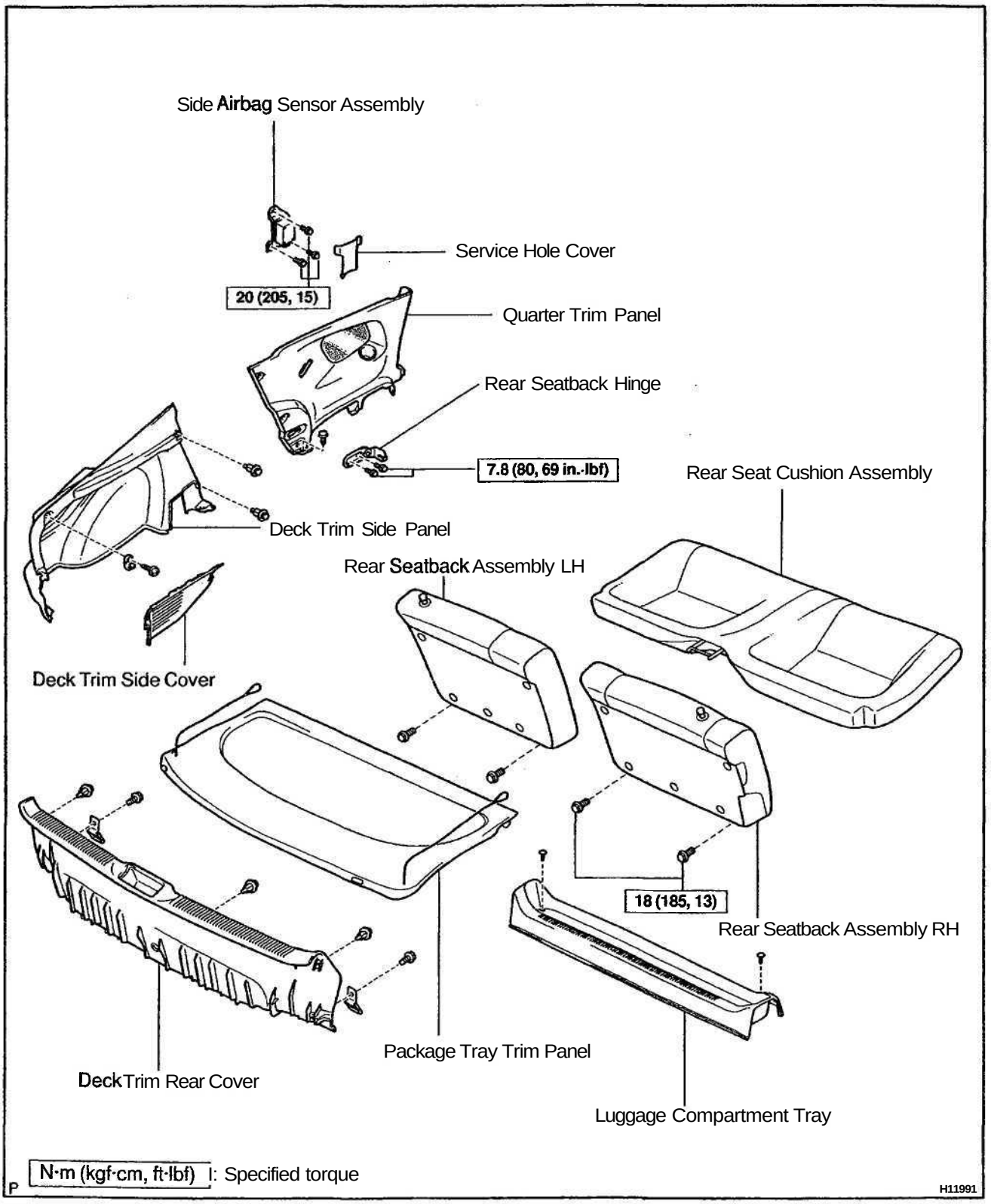

RS0KJ-01

REMOVAL

NOTICE:

- If the wiring connector of the SRS is disconnected with the ignition switch at ON position, DTCs will be recorded.
- Do not open the cover or the case of the ECU and various electrical devices unless absolutely necessary. (If the **IC** terminals are touched, the **IC** may be destroyed by static **electricity.)**

HINT:

For step 1 to 9, refer to page BO–88.

1. **REMOVE PACKAGE TRAY TRIM PANEL**
2. **REMOVE REAR SEATBACK ASSEMBLY LH AND RH**
3. **REMOVE REAR SEAT CUSHION ASSEMBLY**
4. **REMOVE DECK TRIM REAR COVER**
5. **REMOVE DECK TRIM SIDE COVER**
6. **REMOVE DECK TRIM SIDE PANEL**
7. **REMOVE LUGGAGE COMPARTMENT TRAY**
8. **REMOVE REAR SEATBACK HINGE**
9. **REMOVE QUARTER TRIM PANEL**

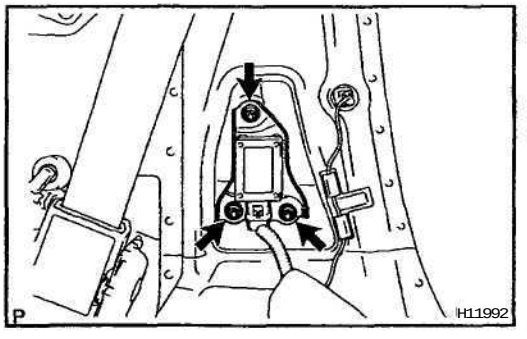

10. **REMOVE SIDE AIRBAG SENSOR ASSEMBLY**

(a) Remove the cover.

(b) Disconnect the connector.

NOTICE:

Remove the connector with the sensor assembly installed.

(c) Remove the 3 nuts and side airbag sensor assembly.

INSPECTION

1. VEHICLES NOT INVOLVED IN COLLISION

Do a diagnostic system check (See page DI–326).

2. VEHICLE INVOLVED IN COLLISION AND AIRBAG IS NOT DEPLOYED

Do a diagnostic system check (See page DI-326).

3. VEHICLE INVOLVED IN COLLISION AND AIRBAG IS DEPLOYED

Replace the side airbag sensor assembly (See page DI-326).

REPLACEMENT

REPLACEMENT REQUIREMENTS

In the following cases, replace the side airbag sensor assembly.

- If the side airbag assembly has been deployed in a collision.
- If the side airbag sensor assembly has been found to be faulty in troubleshooting.
- If the side airbag sensor assembly has been dropped.

CAUTION:

For removal and installation of the side airbag sensor assembly, see page RS–63 and RS–66. Be sure to follow the correct procedure.

RS0IOM-01

INSTALLATION

NOTICE:

- **Never use SRS parts from another vehicle. When replacing parts, replace them with new ones.**
- **Never reuse the side airbag sensor assembly involved in a collision when the airbag has deployed.**
- **Never repair a sensor in order to reuse it.**

HINT:

For step 2 to 10, refer to page BO–91.

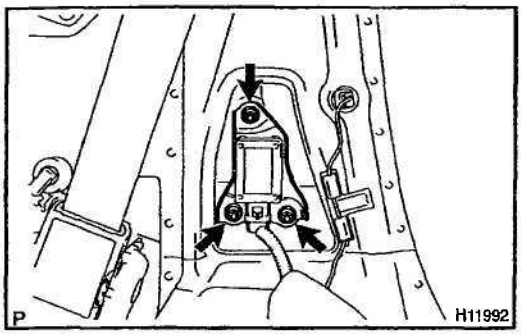

1. INSTALL SIDE AIRBAG SENSOR

(a) Install the side airbag assembly with 3 screws.
Torque: 20 **N·m** (205 **kgf·cm,** 15 **ft·lbf)**

(b) Connect the connector.

NOTICE:

- **Connection of the connector is done after the sensor assembly has been installed.**
- **Make sure the sensor assembly is installed with the specified torque.**
- **If the sensor assembly has been dropped, or there are cracks, dents or other defects in the case, bracket or connector, replace the sensor assembly with a new one.**
- **When installing the sensor assembly, take care that the SRS wiring does not interfere with other parts and is not pinched between other parts.**
- **After installation, shake the sensor assembly to check that there is no looseness.**

(c) Install the cover.

2. INSTALL QUATER TRIM PANEL

3. INSTALL REAR SEAT BACK HINGE
Torque: 7.8 N·m (80 kgf·cm, 69 in.·lbf)

4. INSTALL LUGGAGE COMPARTMENT TRAY

5. INSTALL DECK TRIM SIDE PANEL

6. INSTALL DECK TRIM SIDE COVER

7. INSTALL DECK TRIM REAR COVER

8. INSTALL REAR SEAT CUSHION ASSEMBLY

9. INSTALL REAR SEATBACK ASSEMBLY LH AND RH
Torque: 18 N·m (185 kgf·cm, 13 ft-lbf)

10. INSTALL PACKAGE TRAY TRIM PANEL

DOOR SIDE AIRBAG SENSOR

COMPONENTS

RS0KN-01

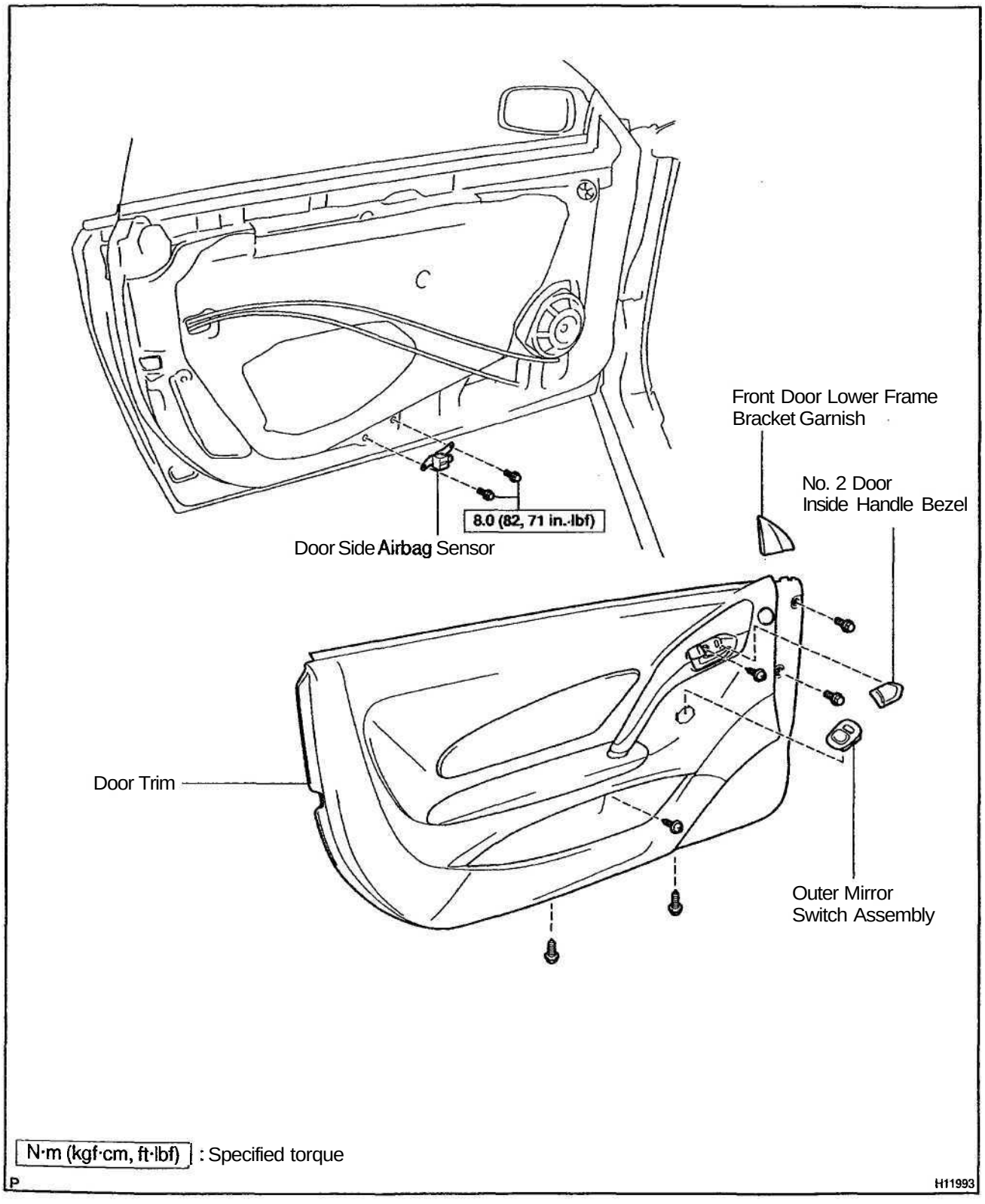

N·m (kgf·cm, ft·lbf) : Specified torque

P

H11993

RS0KO-01

REMOVAL

NOTICE:

- **If the wiring connector of the SRS is disconnected with the ignition switch at ON position, DTCs will be recorded.**
- **Never use SRS parts from another vehicle. When replacing parts, replace them with new parts.**
- **Never reuse the sensor involved in a collision when the SRS has deployed.**
- **Never repair a sensor in order to reuse it.**

HINT:

For step 1 to 4, refer to page BO–11.

1. **REMOVE NO. 2 DOOR INSIDE HANDLE BEZEL**
2. **REMOVE OUTER MIRROR SWITCH ASSEMBLY**
3. **REMOVE FRONT DOOR LOWER FRAME BRACKET GARNISH**
4. **REMOVE DOOR TRIM**

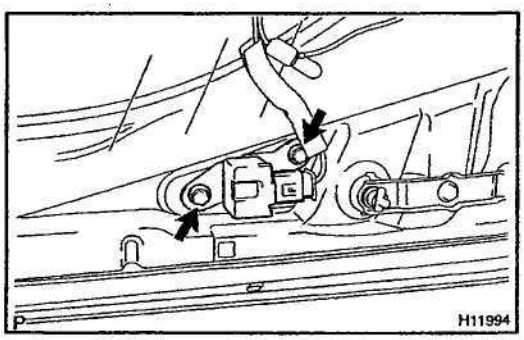

5. **REMOVE DOOR SIDE AIRBAG SENSOR**

(a) Disconnect the door side airbag sensor connector.

NOTICE:

Disconnect the connector with sensor assembly installed.

(b) Remove the 2 bolts and door side airbag sensor.

RS0KP–01

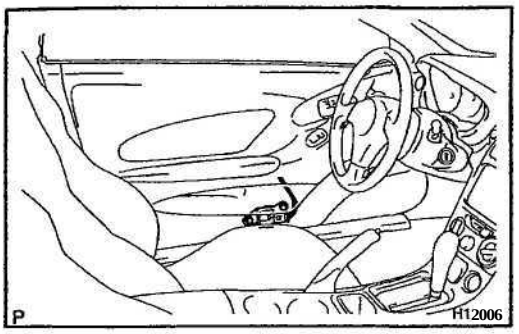

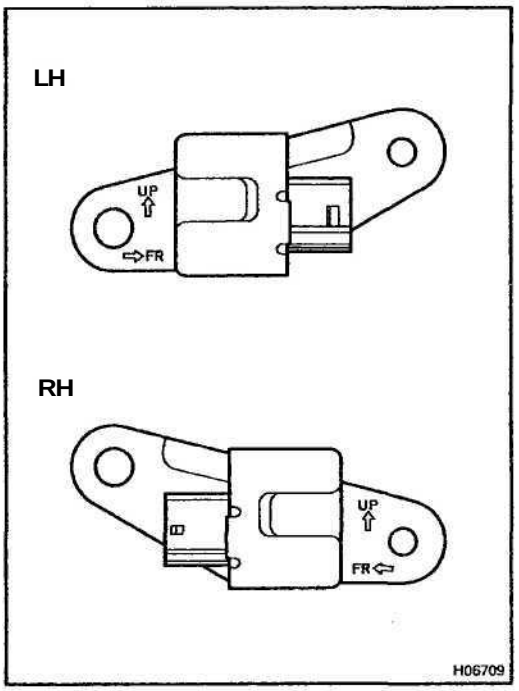

INSPECTION

1. VEHICLES NOT INVOLVED IN COLLISION

Do a diagnostic system check (See page DI–326).

2. VEHICLES INVOLVED IN COLLISION

(a) Do a diagnostic system check (See page DI-326).

(b) If the front door or its periphery is damaged, do a visual check for damage to the door side airbag sensor, which includes the following items even if the airbag was not deployed:

- Check the bracket deformation.
- Check the paint peeling off the bracket.
- Check the cracks, dents or chips in the case.
- Check the cracks, dents, chipping and scratches in the connector.
- Check the peeling off of the label or damage to the serial number.

REPLACEMENT

REPLACEMENT REQUIREMENTS

In the following cases, replace the front airbag sensor.

- If the side airbag assembly has been deployed in a collision.
- If the door side airbag sensor has been found to be faulty in troubleshooting.
- If the door side airbag sensor has been found to be faulty during checking items (See page RS–59).
- If the door side airbag sensor has been dropped.

CAUTION:

For removal and installation of the door side airbag sensor, see page RS–68 and RS–71. Be sure to follow the correct procedure.

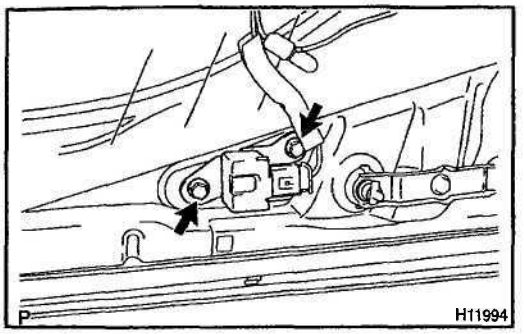

RS0KR–01

INSTALLATION

HINT:

For step 2 to 5, refer to page BO–21.

1. INSTALL DOOR SIDE AIRBAG SENSOR

(a) Install the door side airbag sensor with the 2 bolts.

Torque: 8.0 N·m (82 kgf·cm, 71 in.·lbf)

NOTICE:

- **Connection of the connector is done after the sensor has been installed.**
- Make sure the sensor is installed with the specified torque.
- If the sensor has been dropped, or there are cracks, dents or other defects in the case, brackets or connector, replace the removed sensor with new one.
- The door side airbag sensor is equipped with an electrical connection check mechanism. Be sure to lock this mechanism securely when connecting the connector. If the connector is not securely locked, a malfunction code will be detected by the diagnostic system.

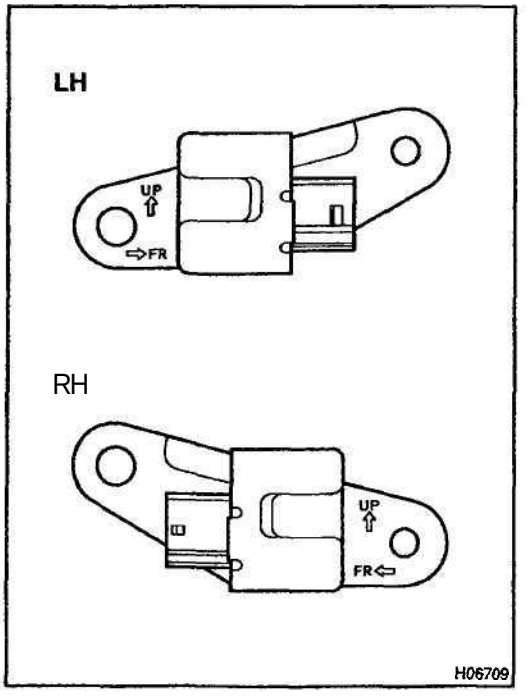

HINT:

Install the door side airbag sensor with the arrow on the sensor facing toward the front of the vehicle.

(b) Connect the front airbag sensor connector.

2. INSTALL DOOR TRIM

3. INSTALL FRONT DOOR LOWER FRAME BRACKET GARNISH

4. INSTALL OUTER MIRROR SWITCH ASSEMBLY

5. INSTALL NO. 2 DOOR INSIDE HANDLE BEZEL

WIRE HARNESS AND CONNECTOR

LOCATION

RS0KS-01

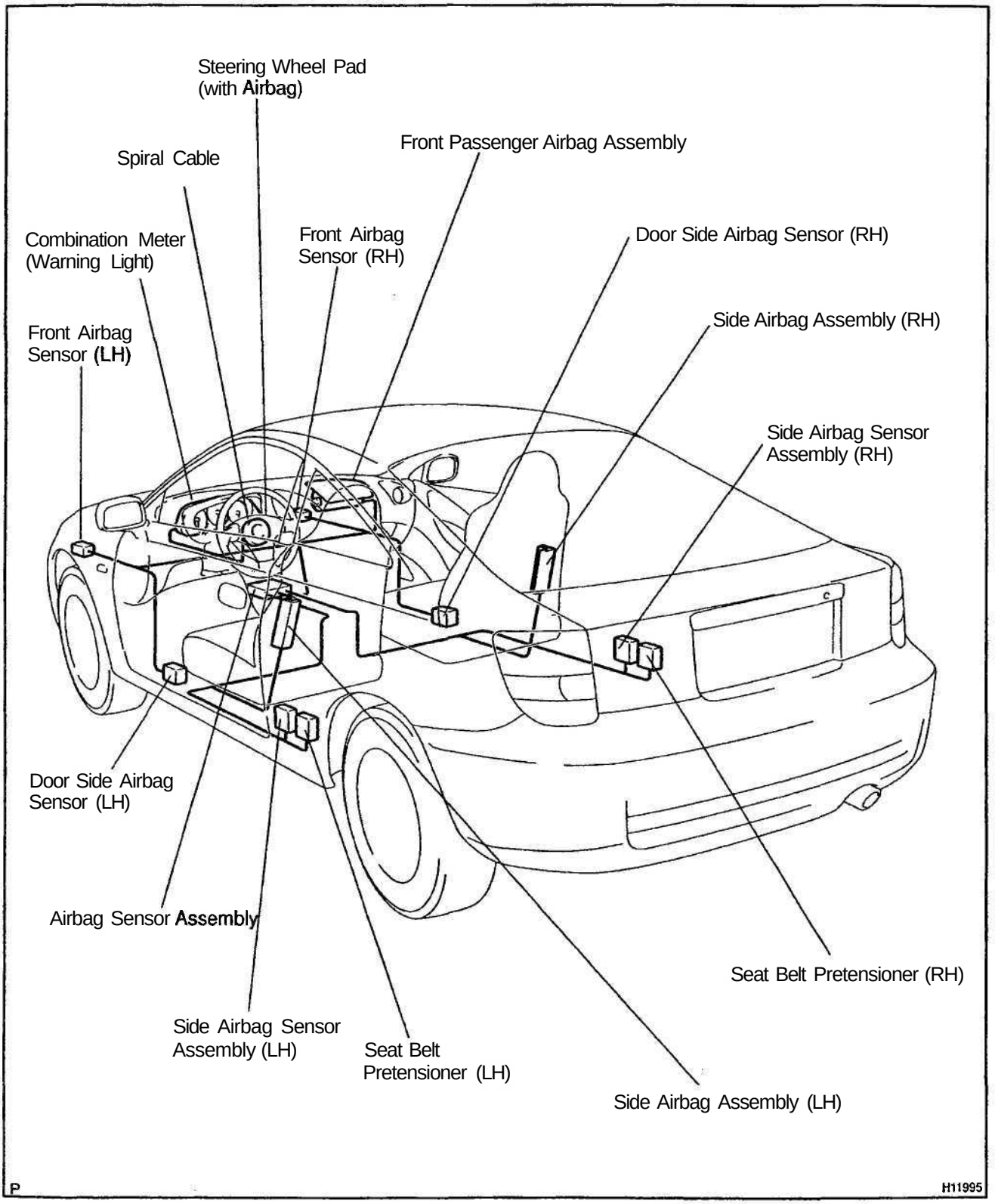

INSPECTION

HINT:

The SRS wire harness is integrated with the instrument panel wire harness assembly. All the connectors in the system are a standard yellow color.

1. VEHICLES NOT INVOLVED IN COLLISION

Do a diagnostic system check (See page DI–326).

2. VEHICLES INVOLVED IN COLLISION

(a) Do a diagnostic system check (See page DI-326).

(b) Check breaks in all wires of the SRS wire harness, and exposed conductors.

(c) Check to see if the SRS wire harness connectors are cracked or chipped.

REPLACEMENT

In the following cases,replace the wire harness or connector.

- If any part of the SRS wire harness or any connector has been found to be faulty in troubleshooting.
- If any part of the SRS wire harness or any connector has been found to be faulty during checking items (See page RS-73).

CAUTION:

If the wire harness used in the SRS is damaged, replace the whole wire harness assembly.

BODY ELECTRICAL

BODY ELECTRICAL SYSTEM BE–1
TROUBLESHOOTING BE-2
POWER SOURCE BE–10
IGNITION SWITCH AND KEY UNLOCK WARNING SWITCH BE–13
HEADLIGHT AND TAILLIGHT SYSTEM BE–15
FOG LIGHT SYSTEM BE-22
TURN SIGNAL AND HAZARD WARNING SYSTEM BE-25
INTERIOR LIGHT SYSTEM BE–27
BACK-UP LIGHT SYSTEM BE-30
STOP LIGHT SYSTEM BE-32
WIPER AND WASHER SYSTEM BE-34
COMBINATION METER BE-39
ELECTRIC TENSION REDUCER SYSTEM . BE–52
DEFOGGER SYSTEM BE–54
POWER WINDOW CONTROL SYSTEM BE-58
POWER DOOR LOCK CONTROL SYSTEM . BE–62
WIRELESS DOOR LOCK CONTROL SYSTEM BE–67
SLIDING ROOF SYSTEM BE–82
POWER MIRROR CONTROL SYSTEM BE-85
AUDIO SYSTEM BE–88
ANTENNA BE-119
CLOCK BE–122
HORN SYSTEM BE–125

BE

BODY ELECTRICAL SYSTEM

PRECAUTION

BE00M-02

HINT:

Take care to observe the following precautions when performing inspections or removal and replacement of body electrical related parts.

1. HEADLIGHT SYSTEM

Halogen bulbs have pressurized gas inside and require special handling. They can burst if scratched or dropped. Hold a bulb only by its plastic or metal case.

Don't touch the glass part of a bulb with bare hands.

2. SRS (SUPPLEMENTAL RSTRAINT SYSTEM)

The CELICA is equipped with an SRS (Supplemental Restraint System) such as the driver airbag and front passenger airbag, failure to carry out service operation in the correct sequence could cause the SRS to unexpectedly deploy during servicing, possibly leading to a serious accident. Before servicing (including removal or installation of parts, inspection or replacement), be sure to read the precautionary notices in the RS section.

3. AUDIO SYSTEM

If the negative (-) terminal cable is disconnected from the battery, the preset AM, FM 1 and FM 2 stations stored in memory are erased, so be sure to note the stations and reset them after the battery terminal is reconnected.

4. MOBILE COMMUNICATION SYSTEM

If the vehicle is equipped with a mobile communication system, refer to precautions in the IN section.

TROUBLESHOOTING

PROBLEM SYMPTOMS TABLE

BE0ON-02

IGNITION SWITCH AND KEY UNLOCK WARNING SWITCH:

Symptom	Suspect Area	See page
Ignition switch is not set to each position.	1. Ignition Switch	BE–14
"Key unlock warning system" does not operate.	1. GAUGE Fuse 2. Key Unlock Warning Switch 3. Door Courtesy Switch 4. Body Control System 5. Combination Meter 6. Wire Harness	BE–10 BE-14 BE–28 DI–535 – –

HEADLIGHT AND TAILLIGHT SYSTEM

Symptom	Suspect Area	See page
Headlight does not light. (Taillight is normal.)	1. HEAD Fuse (LH, RH) 2. Headlight Relay 3. Headlight Dimmer Switch 4. Light Control Switch 5. Body Control System 6. Headlight Bulb 7. Wire Harness	BE-10 BE–17 BE–17 BE-17 DI–535 – –
Headlight does not light. (Taillight does not light up.)	1. Light Control Switch 2. Body Control System 3. Headlight Bulb 4. Wire Harness	BE-17 DI–535 – –
Only one side light does not light.	1. HEAD Fuse 2. Headlight Bulb 3. Wire Harness	BE-10 – –
"Lo–Beam" does not light.	1. Light Control Switch	BE-17
"Lo–Beam" does not light. (ALL)	1. Headlight Dimmer Switch 2. Body Control System 3. Wire Harness	BE-17 BE-17 –
"Lo–Beam" does not light (ONE SIDE)	1. HEAD LO (LH) Fuse 2. HEAD LO (RH) Fuse 3. Headlight Bulb 4. Wire Harness	BE-10 BE-10 – –
"Hi–Beam" does not light (ALL)	1. Headlight Dimmer Switch 2. Body Control System 3. Wire Harness	BE-17 DI-535 –
"Hi–Beam" does not light (ONE SIDE)	1. HEAD HI (LH) Fuse 2. HEAD HI (RH) Fuse 3. Headlight Bulb 4. Wire Harness	BE-10 BE-10 – –
"Flash" does not light.	1. Headlight Dimmer Switch 2. Body Control System 3. Wire Harness	BE-17 DI–535 –
"Light–on warning System" does not operate	1. GAUGE Fuse 2. Door courtesy Switch (Driver's) 3. Body Control System 4. Combination Meter 5. Wire Harness	BE-10 BE-28 DI–535 – –

BE

"Automatic light control system" does not operate.	1. ECU-IG Fuse 2. DOME Fuse 3. Automatic Light Control Sensor 4. Light Control Switch 5. Door Courtesy Switch 6. Body Control System 7. Wire Harness	BE-10 BE-10 BE-17 BE-17 BE-28 DI-535 –
Headlight does not light with light control SW in HEAD.	1. Light Control Switch 2. Body Control System 3. Wire Harness	BE-17 DI-535 –
Headlight does not go out with light control SW in OFF.	1. Headlight Relay 2. Body Control System 3. Wire Harness	BE-17 DI-535 –
Taillight does not light with light control SW in TAIL.	1. Taillight Relay 2. Light Control Switch 3. Body Control System	BE-17 BE-17 DI-535
Taillight does not go out with light control SW in OFF.	1. Taillight Relay 2. Light Control Switch 3. Body Control System 4. Wire Harness	BE-17 BE-17 DI-535 –
Headlight does not light with engine running and light control SW in OFF.	1. GAUGE Fuse 2. Generator L Terminal 3. Parking Brake Switch 4. Body Control System 5. Wire Harness	BE-10 CH-10 BE-46 DI-535 –

FOG LIGHT SYSTEM

Symptom	Suspect Area	See page
Front fog light does not light with light control switch at HEAD. (Headlight is normal.)	1. FOG Fuse 2. Front Fog Light Relay 3. Front Fog Light Switch 4. Wire Harness	BE-10 BE-23 BE-23 –
Front fog light does not light with light control switch at HEAD. (Headlight does not light up.)	1. Headlight and Taillight System 2. Wire Harness	BE-2 –
Only one light does not light up.	1. Bulb 2. Wire Harness	– –

TURN SIGNAL AND HAZARD WARNING SYSTEM

Symptom	Suspect Area	See page
"Hazard" and Turn" do not light up.	1. Hazard Warning Switch 2. Turn Signal Flasher 3. Wire Harness	BE-26 BE-26 –
The flashing frequency is abnormal.	1. Bulb 2. Turn Signal Flasher 3. Wire Harness	– BE-26 –
Hazard warning light does not light up. (Turn is normal.)	1. HAZARD Fuse 2. Wire Harness	BE-10 –
Hazard warning light does not light up in one direction.	1. Hazard Warning Switch 2. Wire Harness	BE-26 –
Turn signal does not light up. (Combination meter, wiper and washer do not operate.)	1. Ignition Switch 2. TURN Fuse 3. Turn Signal Switch 4. Wire Harness	BE-14 BE-10 BE-26 –

Turn signal does not light up. (Combination meter, wiper and washer are normal.)	1. TURN Fuse 2. Turn Signal Switch 3. Wire Harness	BE–10 BE–26 –
Turn signal does not light up in one direction.	1. Turn Signal Switch 2. Wire Harness	BE-26 –
Only one bulb does not light up.	1. Bulb 2. Wire Harness	–

INTERIOR LIGHT SYSTEM

Symptom	Suspect Area	Seepage
Only one light does not light up.	1. Bulb 2. Wire Harness	– –
Front interior light does not light up.	1. Bulb 2. Map Light Assembly 3. Wire Harness	– BE–28 –
Rear interior light does not light up.	1. Bulb 2. DOME Fuse 3. Luggage compartment courtesy switch 4. Wire Harness	– BE-10 BE-28 –
The illumination does not fade out when all the doors are dosed.	1. Courtesy Switch 2. Body Control System 3. Wire Harness	BE-28 DI–535 –
The illumination does not fade out immediately when the ignition switch is turned to ACC or ON within 15 seconds after all the doors are closed.	1. Ignition Switch 2. RADIO NO. 2 Fuse 3. GAUGE Fuse 4. Body Control System 5. Wire Harness	BE–14 BE-10 BE-10 DI-535 –
The illumination does not fade out immediately when all the doors are locked within 15 seconds after they are closed.	1. Door Unlock Detection Switch 2. Body Control System 3. Wire Harness	BE–63 DI-535 –

BACK-UP LIGHT SYSTEM

Symptom	Suspect Area	See page
Back–up light does not light up.	1. GAUGE Fuse 2. Back–up Light Switch (M/X) 3. Park/Neutral Position Switch (A/X) 4. Bulb 5. Wire Harness	BE-10 BE–31 DI–202 DI–261 – –
Back–up light remains always ON.	1. Wire Harness	–
Only one light does not light up.	1. Bulb 2. Wire Harness	– –

STOP LIGHT SYSTEM

BE

Symptom	Suspect Area	See page
Stop light does not light up.	1. STOP Fuse 2. Stop Light Switch 3. Bulb 4. Wire Harness	BE-10 BE-33 – –
Stop light remains always ON.	1. Stop Light Switch 2. Wire Harness	BE-33 –
Only one light does not light up.	1. Bulb 2. Wire Harness	– –

WIPER AND WASHER SYSTEM

Symptom	Suspect Area	See page
Wipers and washers do not operate.	1. WIPER Fuse 2. Ignition Switch 3. Wiper and Washer Switch 4. Wire Harness	BE-10 BE-14 BE-35 –
Front wiper does not operate.	1. Front Wiper and Washer Switch 2. Front Wiper Motor 3. Wire Harness	BE-35 BE-35 –
Rear wiper does not operate.	1. Rear Wiper and Washer Switch 2. Rear Wiper Motor and Relay 3. Wire Harness	BE-35 BE-35 –
Front washer does not operate.	1. Front Wiper and Washer Switch 2. Washer Motor 3. Wire Harness	BE-35 BE-35 –
Rear washer does not operate.	1. Rear Wiper and Washer Switch 2. Washer Motor 3. Wire Harness	BE-35 BE-35 –

Meter, Gauges and Illumination:
COMBINATION METER

Symptom	Suspect Area	See page
Tachometer, fuel gauge and engine coolant temperature gauge do not operate.	1. GAUGE Fuse 2. Meter Circuit 3. Wire Harness	BE-10 BE-42 –
Speedometer does not operate.	1. Vehicle Speed Sensor 2. Meter Circuit 3. Wire Harness	BE-46 BE-42 –
Tachometer does not operate.	1. Igniter 2. ECM 3. Meter Circuit 4. Wire Harness	DI-114 DM BE-42 –
Fuel gauge does not operate or abnormal operation.	1. Fuel Receiver Gauge 2. Fuel Sender Gauge 3. Meter Circuit 4. Wire Harness	BE-46 BE-46 BE-42 –
Engine coolant temperature gauge does not operate or abnormal operation.	1. Engine Coolant Temperature Receiver Gauge 2. Engine Coolant Temperature Sender Gauge 3. Meter Circuit 4. Wire Harness	BE-46 BE-46 BE-42 –
All illumination lights do not light up.	1. TAIL Fuse (I/P J/B) 2. Light Control Rheostat 3. Meter Circuit 4. Wire Harness	BE-10 BE-46 BE-42 –
Only one illumination light does not light up.	1. LED 2. Meter Circuit	– BE-42

Warning Lights:
COMBINATION METER

Symptom	Suspect Area	See page
Warning lights do not light up. (Except discharge and door open.)	1. Bulb or LED	–
	2. IGN Fuse	BE–10
	3. Ignition Switch	BE–14
	4. Meter Circuit	BE–42
	5. Generator	CH–10
	6. Wire Harness	–
Brake warning Light does not light up.	1. LED	–
	2. Brake Fluid Level Warning Switch	BE–46
	3. Parking Brake Switch	BE–46
	4. Meter Circuit	BE–42
	5. Wire Harness	–
Seat belt warning light does not light up.	1. LED	–
	2. Seat Belt Buckle Switch	BE–46
	3. Body Control System	DI–535
	4. Meter Circuit	BE–42
	5. Wire Harness	–
Low oil pressure warning light does not light up.	1. LED	–
	2. Low Oil Pressure Warning Switch	BE–46
	3. Meter Circuit	BE–42
	4. Wire Harness	–
Door open warning light does not light up.	1. LED	–
	2. DOME Fuse	BE-10
	3. Door Courtesy Switch	BE-28
	4. Luggage Room Light Switch	BE–28
	5. Body Control System	DI–535
	6. Meter Circuit	BE–42
	7. Wire Harness	–

Indicator Lights:
COMBINATION METER

Symptom	Suspect Area	See page
SRS indicator light does not light up.	1. LED	–
	2. Airbag Sensor Assembly	DI–324
	3. Wire Harness	–
ABS indicator light does not light up.	1. LED	–
	2. Wire Harness	–
Malfunction indicator light does not light up.	1. LED	–
	2. ECM	DM
	3. Wire Harness	–
A/T shift position indicator light does not light up.	1. LED or LCD	–
	2. Park/Neutral Position Switch	DI–202 DI–261
	3. Light Control Rheostat	BE–46
	4. Meter Circuit	BE–42
	5. Wire Harness	–
O/D OFF indicator light does not light up.	1. LED or LCD	–
	2. O/D Main Switch	DI–206 DI–268
	3. ECM	DM
	4. Meter Circuit	BE–42
	5. Wire Harness	–

BE

Turn indicator light does not light up.	1. Bulb 2. Turn Signal and Hazard Warning System 3. Meter Circuit 4. Wire Harness	– BE-2 BE–42 –
High beam indicator light does not light up.	1. Bulb 2. Headlight and Taillight System 3. Meter Circuit 4. Wire Harness	– BE-2 BE–42 –
CRUISE indicator light does not light up.	1. LED 2. Cruise Control ECU 3. Meter Circuit 4. Wire Harness	– DI–483 BE–42 –

DEFOGGER SYSTEM

Symptom	Suspect Area	See page
All defogger systems do not operate.	1. HTR Fuse (I/P J/B) 2. DEF Fuse (I/P J/B) 3. Defogger Relay (I/P J/B) 4. Defogger Switch 5. Wire Harness	BE–10 BE–10 BE–55 BE-55 –
Rear window defogger does not operate.	1. Defogger Wires 2. Wire Harness	BE-55 –

ELECTRIC TENSION REDUCER SYSTEM

Symptom	Suspect Area	See page
Tension reducer does not operate. (Driver's and Passenger's.)	1. GAUGE Fuse 2. Wire Harness	BE-10 –
Tension reducer does not operate. (Only one side.)	1. Buckle Switch 2. Tension Reducer Solenoid 3. Wire Harness	BE-53 BE-53 –

POWER WINDOW CONTROL SYSTEM

Symptom	Suspect Area	See page
Power window does not operate.	1. POWER Fuse 2. GAUGE Fuse 3. Ignition Switch 4. Power Window Master Switch 5. Wire Harness	BE-10 BE-10 BE–14 BE-59 –
"One touch power window system" does not operate.	1. Power Window Master Switch	BE-59
Only one window glass does not move.	1. Power Window Master Switch 2. Power Window Motor 3. Wire Harness	BE-59 BE-59 –
"Window lock system" does not operate.	1. Power Window Master Switch	BE-59
Illumination does not light up.	1. Power Window Master Switch	BE-59

POWER DOOR LOCK CONTROL SYSTEM

Symptom	Suspect Area	See page
"Door lock control system" does not operate.(ALL)	1. Body Control System 2. DOOR Fuse 3. GAUGE Fuse 4. Wire Harness 5. Other Parts	DI–535 BE–10 BE–10 – –
Malfunction in Door Lock / Unlock. (Using door manual switch.)	1. Door Lock Control Switch 2. Body Control System 3. Wire Harness 4. Other Parts	BE–63 DI–535 – –
Malfunction in Door Lock / Unlock. (Using door manual switch and key.)	1. Wire Harness 2. Other Parts	– –
Malfunction in Door Lock / Unlock. (Using key.)	1. Door Unlock Detection Switch 2. Body Control System 3. Wire Harness 4. Other Parts	BE–63 DI–535 – –
Fault in 2 - Operation unlock function of driver's side door key lock and unlock switch.	1. Door Unlock Detection Switch 2. Body Control System 3. Wire Harness 4. Other Parts	BE–63 DI–535 – –
Fault in key confine prevention operation.	1. Door Unlock Detection Switch 2. Door Courtesy Switch 3. Door Lock Control Switch 4. Body Control System 5. Wire Harness 6. Other Parts	BE–63 BE-28 BE–63 DI–535 – –
Only one door lock does not operate.	1. Door Lock Motor 2. Wire Harness	BE–63 –

WIRELESS DOOR LOCK CONTROL SYSTEM:

HINT:

- Troubleshooting of the wireless door lock control system is based on the premise that the door lock control system, power slide door control system and theft deterrent system are operating normally. Accordingly, before troubleshooting the wireless door lock control system, first make certain that the door lock control system, power slide door control system and theft deterrent system are operating normally.
- If the trouble still reappears even though there are no abnormalities in any of the other circuits, check and replace the Wireless Door Lock Receiver as the last step.

Symptom	Suspect Area	See page
All functions of wireless door lock control system do not operate.	1. Door Courtesy Switch 2. Door Key Lock and Unlock Switch 3. Key Unlock Warning Switch 4. Wireless Door Lock Receiver 5. Body Control System 6. Wire Harness	BE-28 BE–63 BE–14 BE–73 DI-535 –
Only door unlock operation is not possible (Lock operation is possible).	1. Door key Lock and Unlock Switch 2. Door Unlock Detection Switch 3. Wireless Door Lock Receiver 4. Body Control System 5. Wire Harness	BE–63 BE–63 BE-73 DI-535 –
Only door lock operation is not possible (Unlock operation is possible).	1. Door key Lock and Unlock Switch 2. Wireless Door Lock Receiver 3. Wire Harness	BE–63 BE-73 –

BE

Only key confinement prevention function is not possible.	1. Key Unlock Warning Switch 2. Wireless Door Lock Receiver 3. Wire Harness	BE-14 BE-73 –
• Wireless door lock function operates even when each door is opened. • Automatic lock function operates even if any door is opened within 30 seconds after all doors are unlocked by wireless door lock control system.	1. Door Courtesy Switch 2. Wireless Door Lock Receiver 3. Wire Harness	BE-28 BE-73 –
Wireless door lock functions incorrectly. (Although one door is unlocked, when the transmitter switch is pressed, all doors are unlocked.)	1. Door Unlock Detection Switch 2. Wireless Door Lock Receiver 3. Wire Harness	BE-63 BE-73 –
Warning operation will not be performed even if the panic button is pressed.	4. Wireless Door Lock Receiver 5. Wire Harness	BE-73 –

SLIDING ROOF SYSTEM

Symptom	Suspect Area	See page
Sliding roof system does not operate.	1. GAUGE Fuse (I/P J/B) 2. POWER Fuse (I/P J/B) 3. Sliding Roof Control Assembly 4. Sliding Roof Switch 5. Wire Harness	BE-10 BE-10 BE-84 BE-84 –
Sliding roof system operates abnormally.	1. Sliding Roof Control Assembly 2. Sliding Roof Switch 3. Wire Harness	BE-84 BE-84 –
Sliding roof system stops operation half way.	1. Sliding Roof Control Assembly 2. Sliding Roof Switch	BE-84 BE-84
"Key-off Sliding Roof" operation does not operate.	1. POWER Fuse 2. GAUGE Fuse 3. Ignition Switch 4. Door Courtesy Switch 5. Body Control System 6. Wire Harness	BE-10 BE-10 BE-14 BE-28 DI-535 –

POWER MIRROR CONTROL SYSTEM

Symptom	Suspect Area	See page
Mirror does not operate.	1. CIG & RAD Fuse 2. Mirror Switch 3. Mirror Motor	BE-10 BE-86 BE-86
Mirror operates abnormally.	1. Mirror Switch 2. Mirror Motor 3. Wire Harness	BE-86 BE-86 –

POWER SOURCE

LOCATION

BE1CX-01

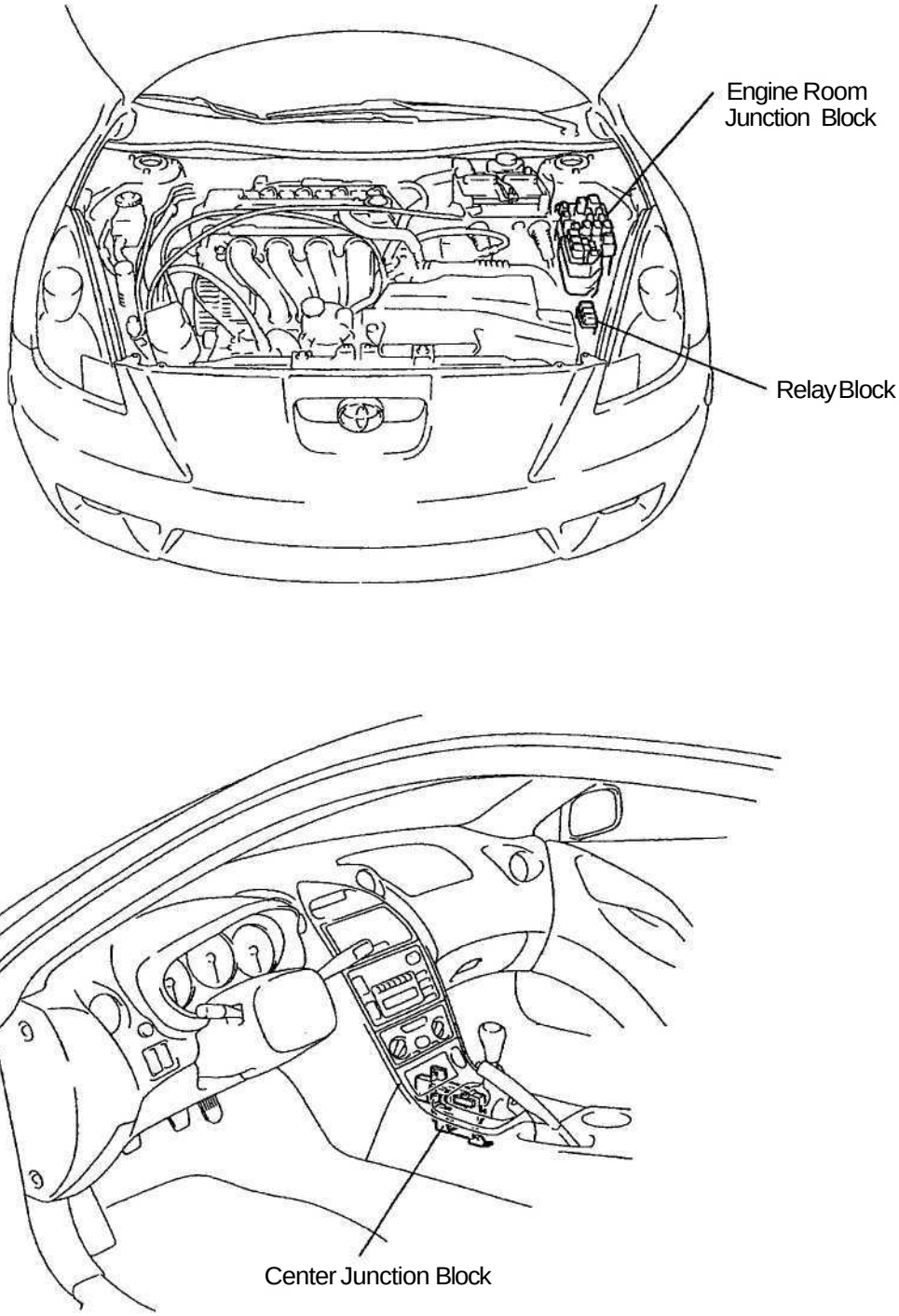

ENGINE ROOM JUNCTION BLOCK

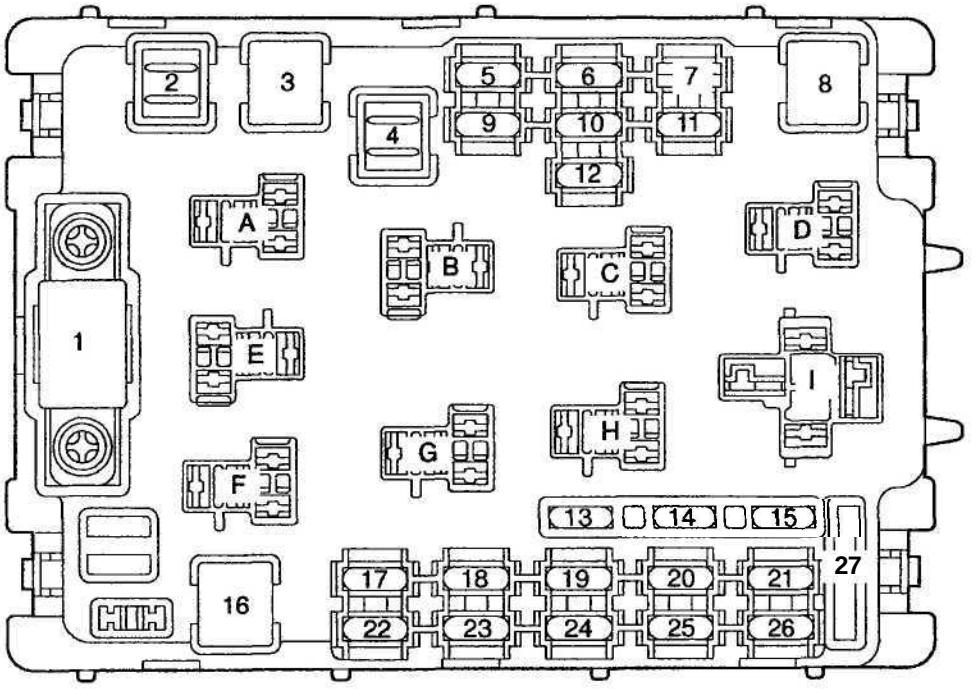

FUSES

1. FL ALT	120 A
2. CDS	30 A
3. ABS NO. 1	40 A
4. RDI	30 A
5. HEAD LH-LWR	10 A
6. HEAD RH-UPR	20 A
7. MMT	30 A
8. HTR	50 A
9. ABS NO. 2	25 A
10. -	-
11. HEAD LH-UPR	10 A
12. HEAD RH-LWR	10 A
13. SPARE	10 A
14. SPARE	15 A
15. SPARE	30 A
16. MAIN	40 A
17. IG2	15 A
18. ST	7.5 A
19. EFI NO. 2	7.5 A
20. EFI NO. 1	7.5 A
21. HORN	10 A
22. HAZ	15 A
23. AM2	7.5 A
24. EFI	15 A
25. DCC	25 A
26. ALT-S	7.5 A
27. SPARE	7.5 A

RELAYS

A. FAN NO. 2 Relay
B. FAN NO. 1 Relay
C. Circuit Opening Relay
D. Horn Relay
E. FAN NO. 3 Relay
F. Magnetic Clutch Relay
G. IG2 Relay
H. EFI Relay
I. Headlight Control Relay

N

I11732

CENTER JUNCTION BLOCK

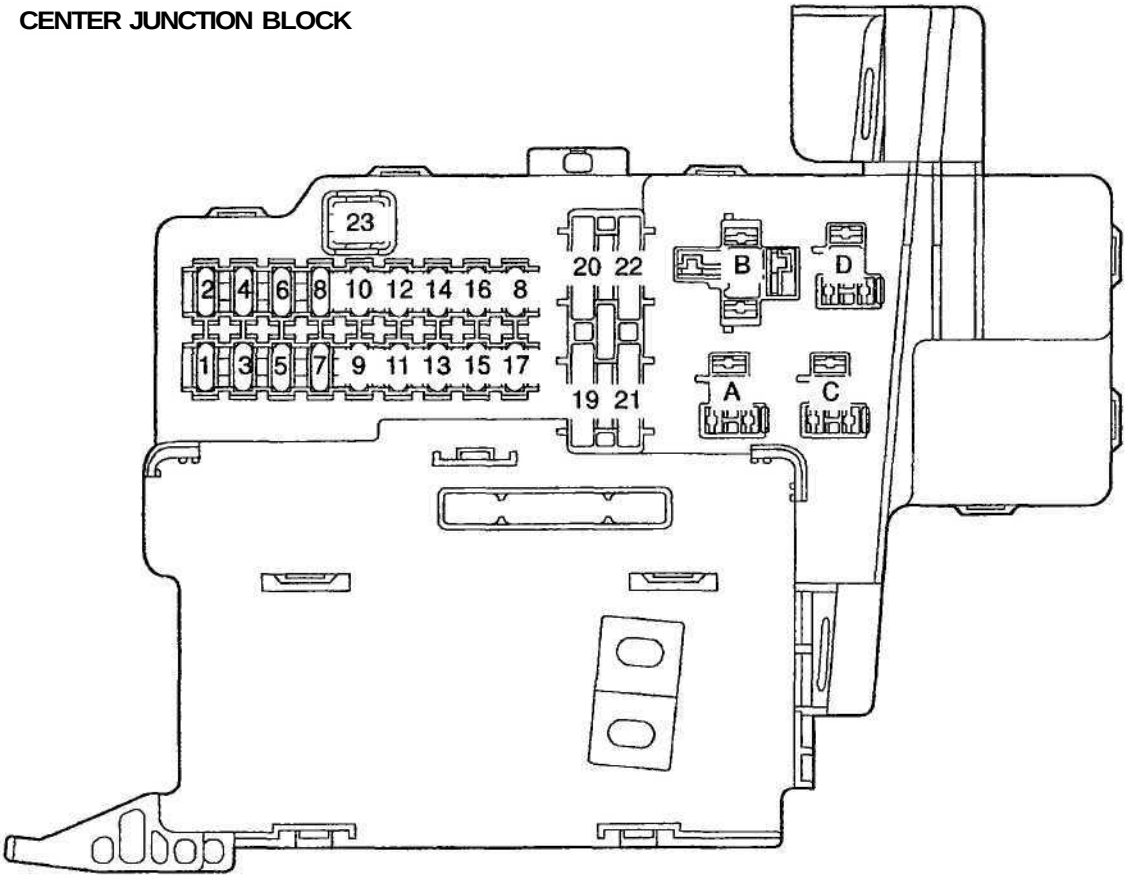

FUSES

1. CIG	15A
2. S/ROOF	15A
3. AM1	25 A
4. FL P/W	20 A
5. DOOR	20 A
6. STOP	10A
7. FR FOG	15A
8. SRS-IG	7.5 A
9. OBD	7.5 A
10. WSHER	15A
11. WIPER	25 A
12. RADID	15A
13. RR WIPER	10A
14. TURN	7.5 A
15. -	-
16. HTR	10A
17. FR R/W	20 A
18. TAIL	10A
19. MULTI-FUSE	5 A (ABS-IG, WARNING, FAN RLY, C/C ECU-IG)
20. MULTI-FUSE	7.5 A (DOME, MPX-B, ECU-B)
21. MULTI-FUSE	5 A (BODY ECU-IG, BK-UP LP, TENS RDC, DEF RLY)
22. MULTI-FUSE	7.5 A (ECU ACC, PANEL2, PANEL1)
23.DEF	30 A

RELAYS

A. -
B. IG1 Relay
C. Defogger Relay
D. Taillight Control Relay

N

I11731

IGNITION SWITCH AND KEY UNLOCK WARNING SWITCH

LOCATION

BE0OP–02

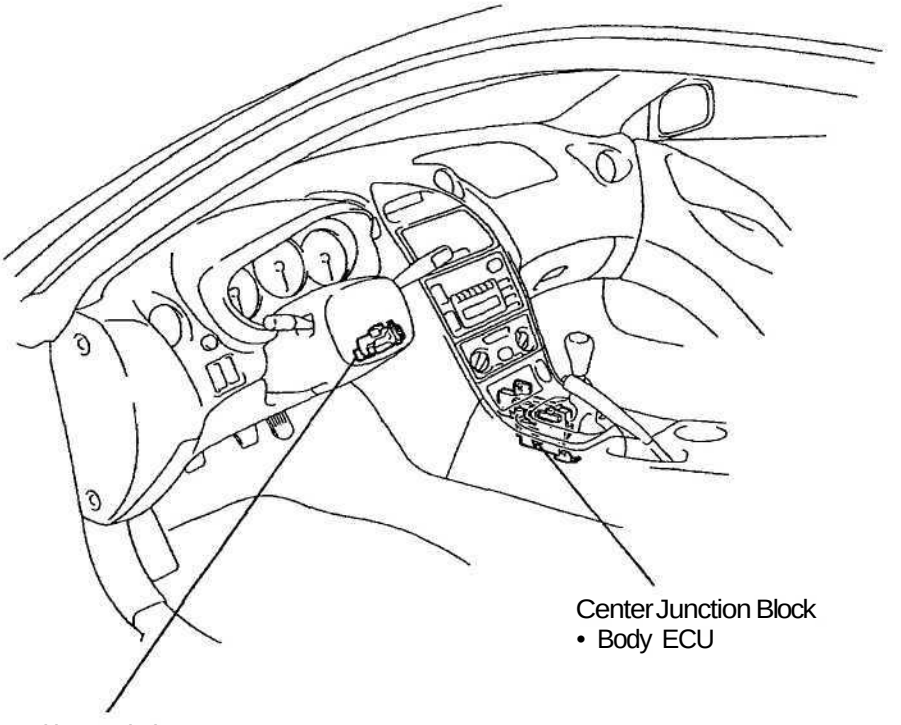

Center Junction Block
• Body ECU

Ignition Switch
• Key Unlock Warning Switch

P

I13314

BE0CC-02

INSPECTION

1. INSPECT IGNITION SWITCH CONTINUITY

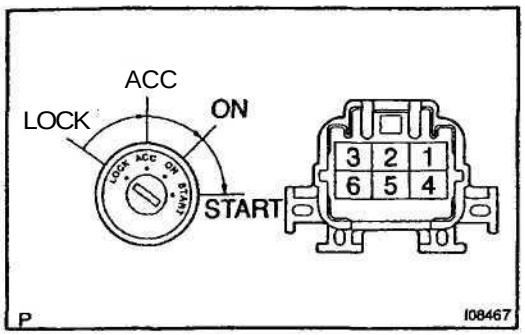

Switch position	Tester connection	Specified condition
LOCK	–	No continuity
ACC	1-3	Continuity
ON	1-2-3 5-6	Continuity
START	1-2 4-5-6	Continuity

If continuity is not as specified, replace the switch.

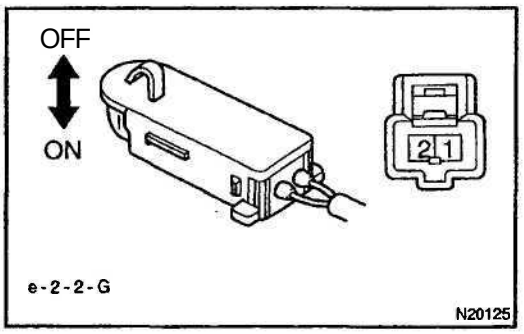

2. INSPECT KEY UNLOCK WARNING SWITCH CONTINUITY

Switch position	Tester connection	Specified condition
OFF (Key removed)	–	No continuity
ON (Key set)	1-2	Continuity

If continuity is not as specified, replace the switch.

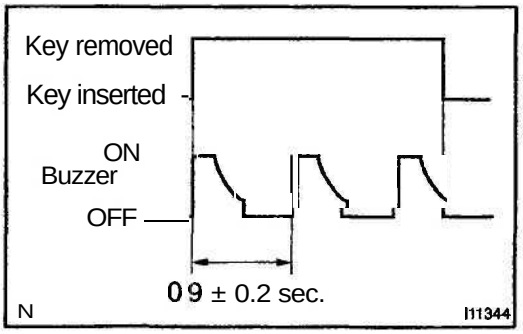

3. INSPECT KEY UNLOCK WARNING BUZZER

Check that the buzzer sound when driver's door is opened and key inserted.

If operation is not as specified, replace the combination meter. (See page BE–42)

HEADLIGHT AND TAILLIGHT SYSTEM

LOCATION

BE8OR-02

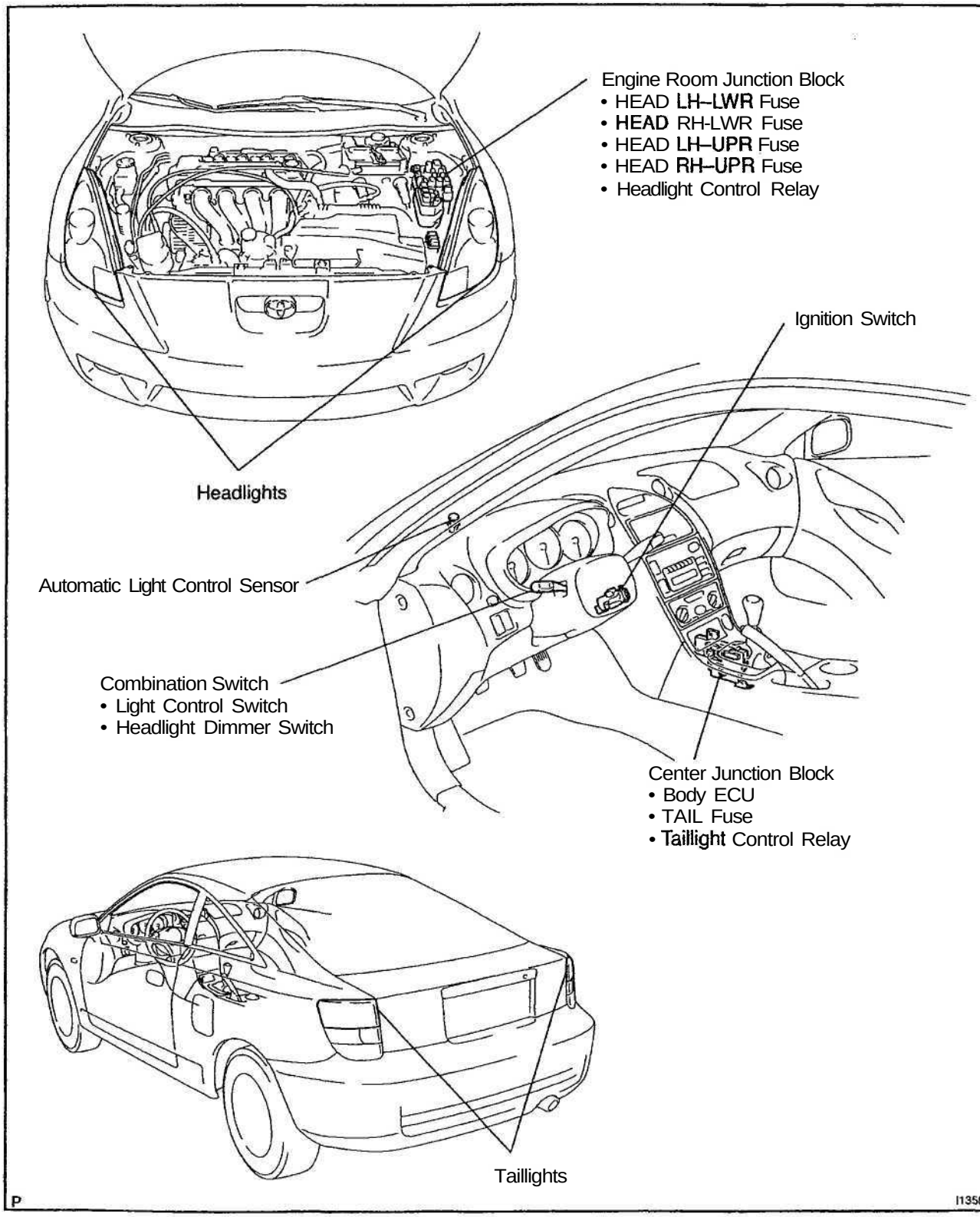

BE0C5-02

COMPONENTS

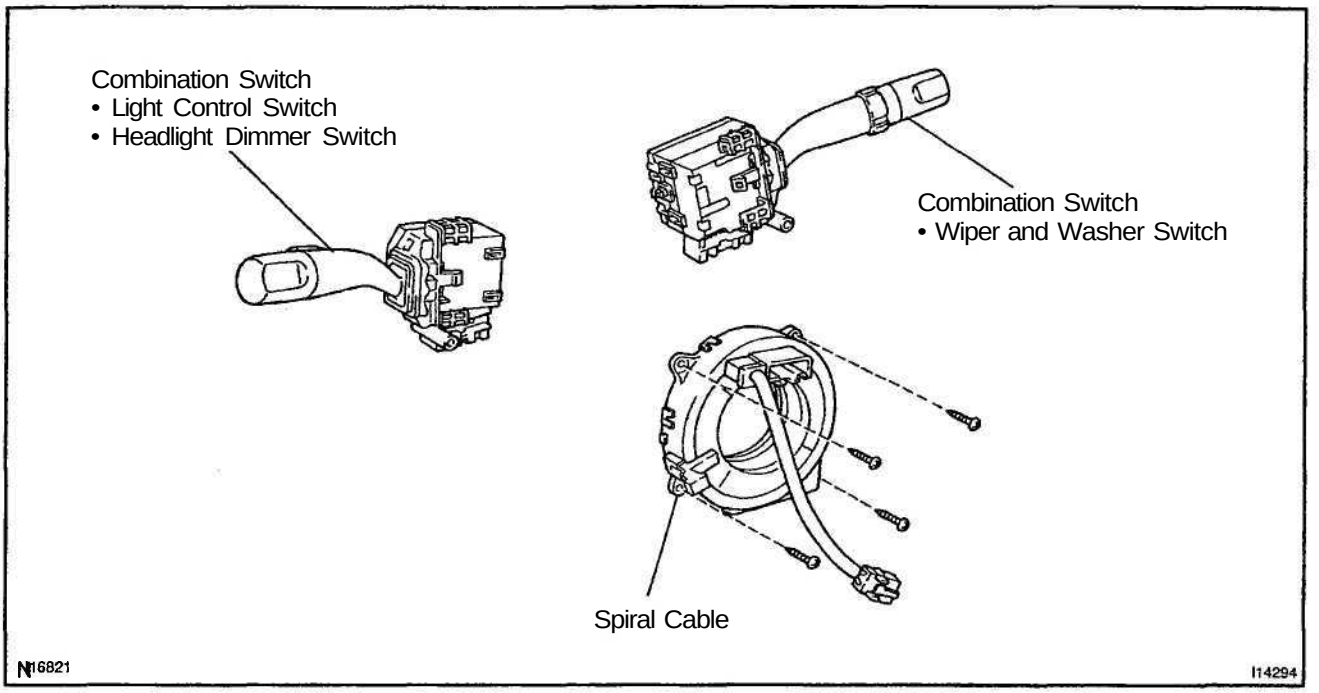

BE0OT-02

INSPECTION

1. INSPECT LIGHT CONTROL SWITCH CONTINUITY

Switch position	Tester connection	Specified condition
OFF	–	No continuity
TAIL	14-16	Continuity
HEAD	13-14-16	Continuity

If continuity is not as specified, replace the switch.

2. INSPECT HEADLIGHT DIMMER SWITCH CONTINUITY

Switch position	Tester connection	Specified condition
Low beam	16-17	Continuity
High beam	7-16	Continuity
Flash	7-8-16	Continuity

If continuity is not as specified, replace the switch.

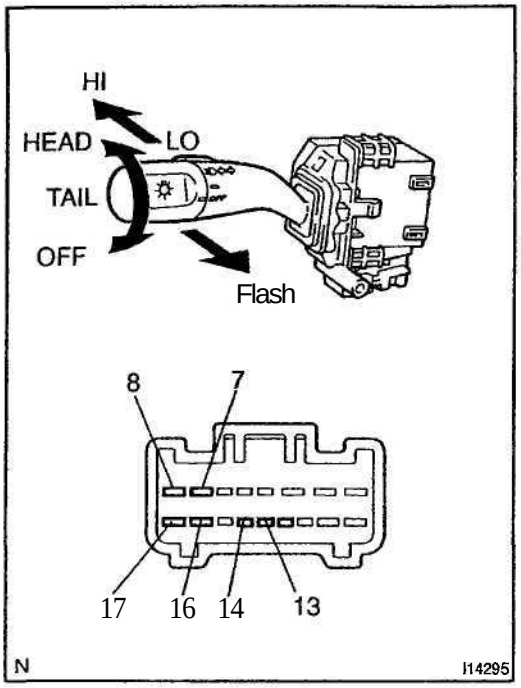

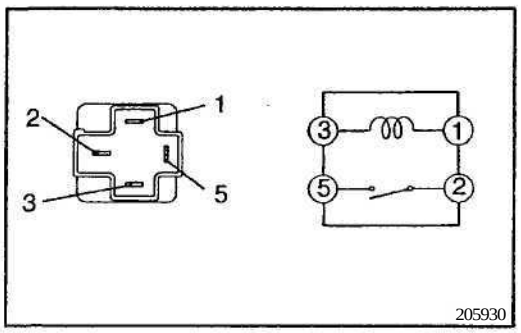

3. INSPECT HEADLIGHT CONTROL RELAY CONTINUITY

Condition	Tester connection	Specified condition
Constant	1-3	Continuity
Apply B+ between terminals 1 and 2.	2-5	Continuity

If continuity is not as specified, replace the relay.

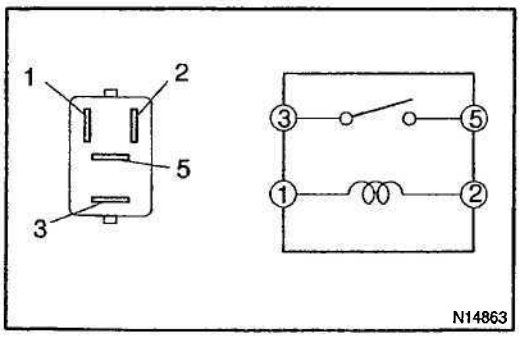

4. INSPECT TAILLIGHT CONTROL RELAY CONTINUITY

Condition	Tester connection	Specified condition
Constant	1-2	Continuity
Apply B+ between terminals 1 and 2.	3-5	Continuity

If continuity is not as specified, replace the relay.

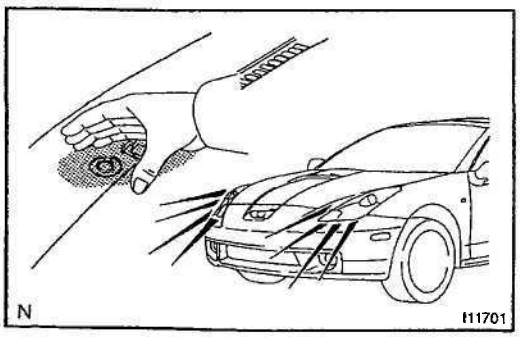

5. w/ Automatic light control system: INSPECT AUTOMATIC LIGHT CONTROL

(a) Turn the ignition switch ON and engine running.
(b) Turn the light control switch to OFF.
(c) Parking brake lever released.
(d) Gradually cover the top of the sensor.
(e) Verify that the accessory lights and the headlights turn ON. (Daytime running lights ON)

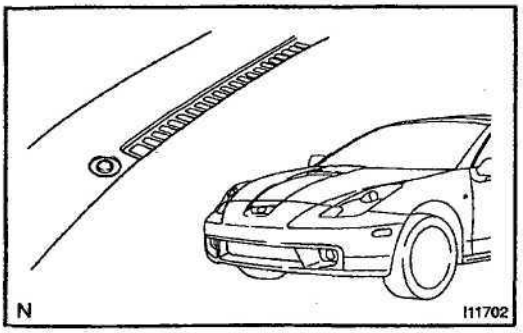

6. w/ Automatic light control system:
INSPECT AUTOMATIC LIGHT CONTROL

(a) Gradually expose the sensor.
(b) Verify that the headlights and the accessory lights turn OFF.

7. w/ Automatic light control system:
INSPECT LIGHT–OFF CONDITION

(a) Turn the ignition switch ON.
(b) Gradually cover the top of the sensor.
Lights auto ON:
(c) Verify that the lights will go out when light control switch position is OFF or the area surrounding the sensor gets bright.

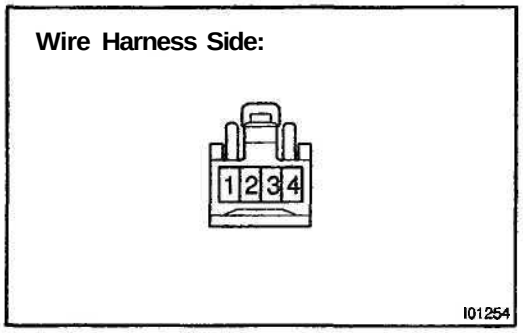

8. w/ Automatic light control system:
INSPECT SENSOR CIRCUIT

(a) Disconnect the connector from the sensor and inspect the connector on the wire harness side, as shown in the chart.

Tester connection	Condition	Specified condition
3 – Ground	Constant	Continuity
1 - Ground	Ignition switch LOCK or ACC	No voltage
1 - Ground	Ignition switch ON	Battery positive voltage
4 - Ground	Ignition switch LOCK or ACC	No voltage
4 – Ground	Ignition switch ON	5.2 – 9.0 V

If circuit is as specified, perform the inspection on the following page.
If the circuit is not as specified, inspect the circuit connected to other parts.

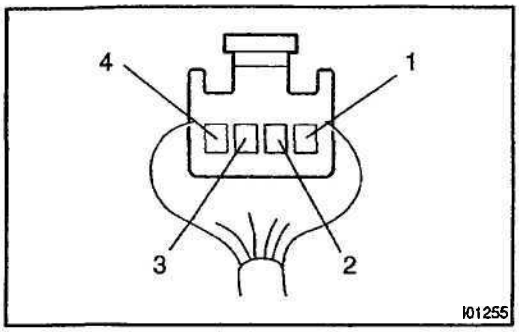

(b) Connect the wire harness side connector to the sensor and inspect wire harness side connector from the back side.

HINT:

- Ignition switch ON.
- Light control switch OFF.
- Vehicle's surroundings are bright.

Tester connection	Condition	Specified condition
3 - Ground	Constant	Continuity
1 - Ground	Ignition switch LOCK or ACC	No voltage
1 – Ground	Ignition switch ON	9.5 V or more
Vehicle is under the direct sun light. (Sensor is not covered)		Taillight and Headlight are ON.

If circuit is as specified, try replacing the sensor with a new one.
If the circuit is not as specified, inspect the circuit connected to other parts.

BE1GY-01

ADJUSTMENT

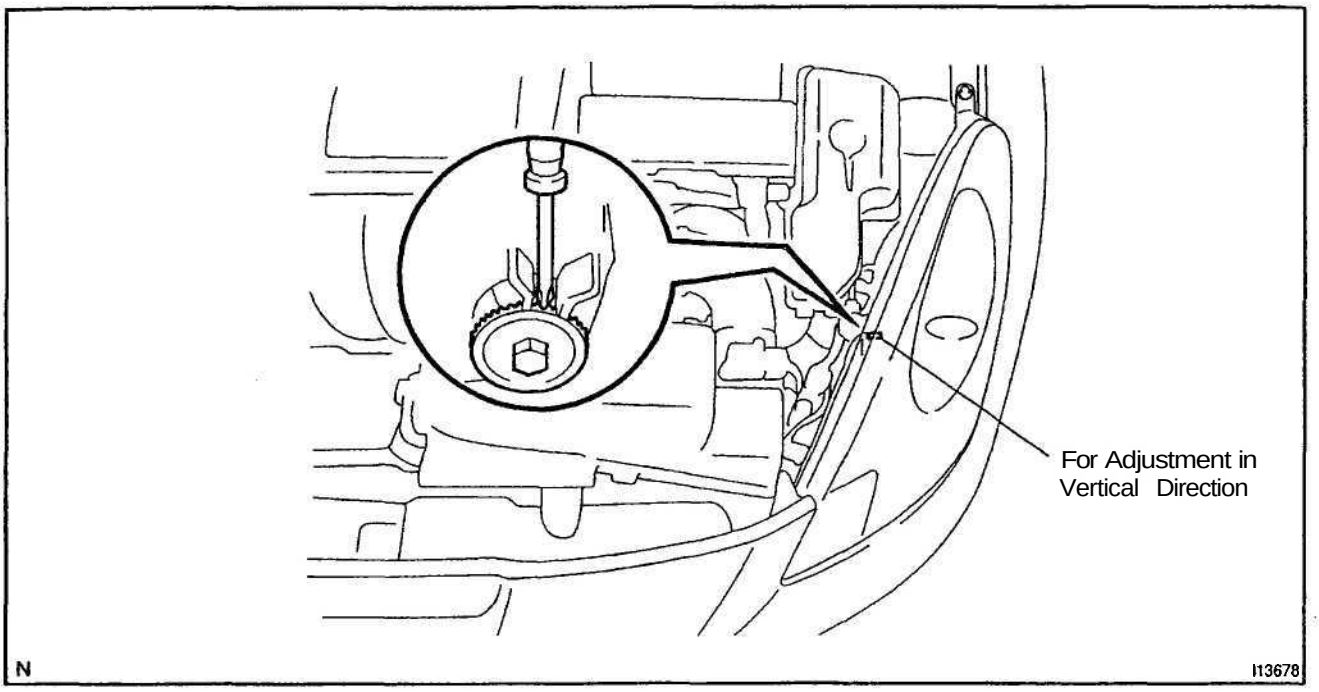

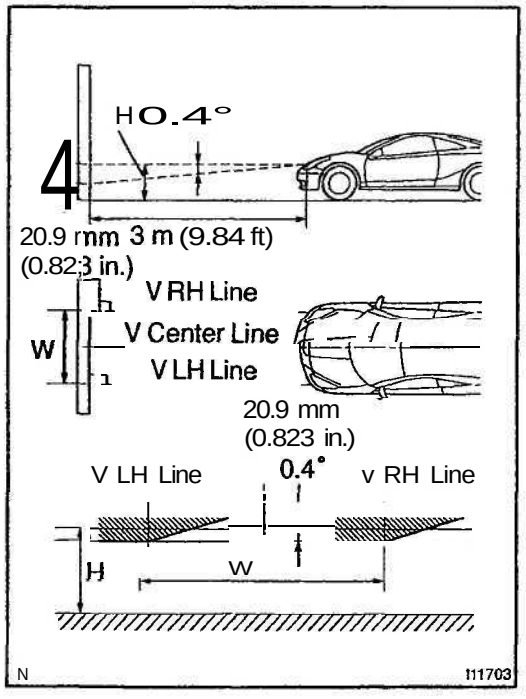

ADJUST HEADLIGHT AIM ONLY

(a) Put the vehicle below conditions.
- Make sure the body around the headlight is not deformed.
- Park the vehicle on a level spot.
- The driver gets into the driver's seat and puts the vehicle in a state ready for driving (with a full tank).
- Bounce the vehicle several times.
- Tire inflation pressure is the specified value.

(b) Prepare the thick white colored paper.

(c) Stand the paper perpendicularly and ensure the distance from it to the head lights is 3 m (9.84 ft).

(d) Ensure that the center line of vehicle and the paper are at a 90 degree angle as shown in the illustration. (H line)

(e) Draw a horizontal line on the paper where the head lights (low beam center mark) of the vehicle are to be.

(f) Draw a vertical line on the paper where the center line of the vehicle is to be. (V center line)

(g) Draw the vertical lines on the paper where the headlights (low beam center marks) of the vehicle are to be. (V RH and LH lines)

(h) Take an appropriate measure to avoid affecting the other light.

NOTICE:

- **Disconnect the connector of the other light to avoid heat affection from the light because the other lens of the head light assembly is made of synthetic resin. When connecting the connector again take care not to make the aiming out of adjustment.**
- **When covering the headlight, finish it within 3 minutes.**

(i) Turn the headlights ON.

(j) Check that the head lights light up the paper as shown in the illustration.

HINT:

As shown in the illustration, adjust aiming of the LH and RH lights respectively.

FOG LIGHT SYSTEM

LOCATION

BE0CV-02

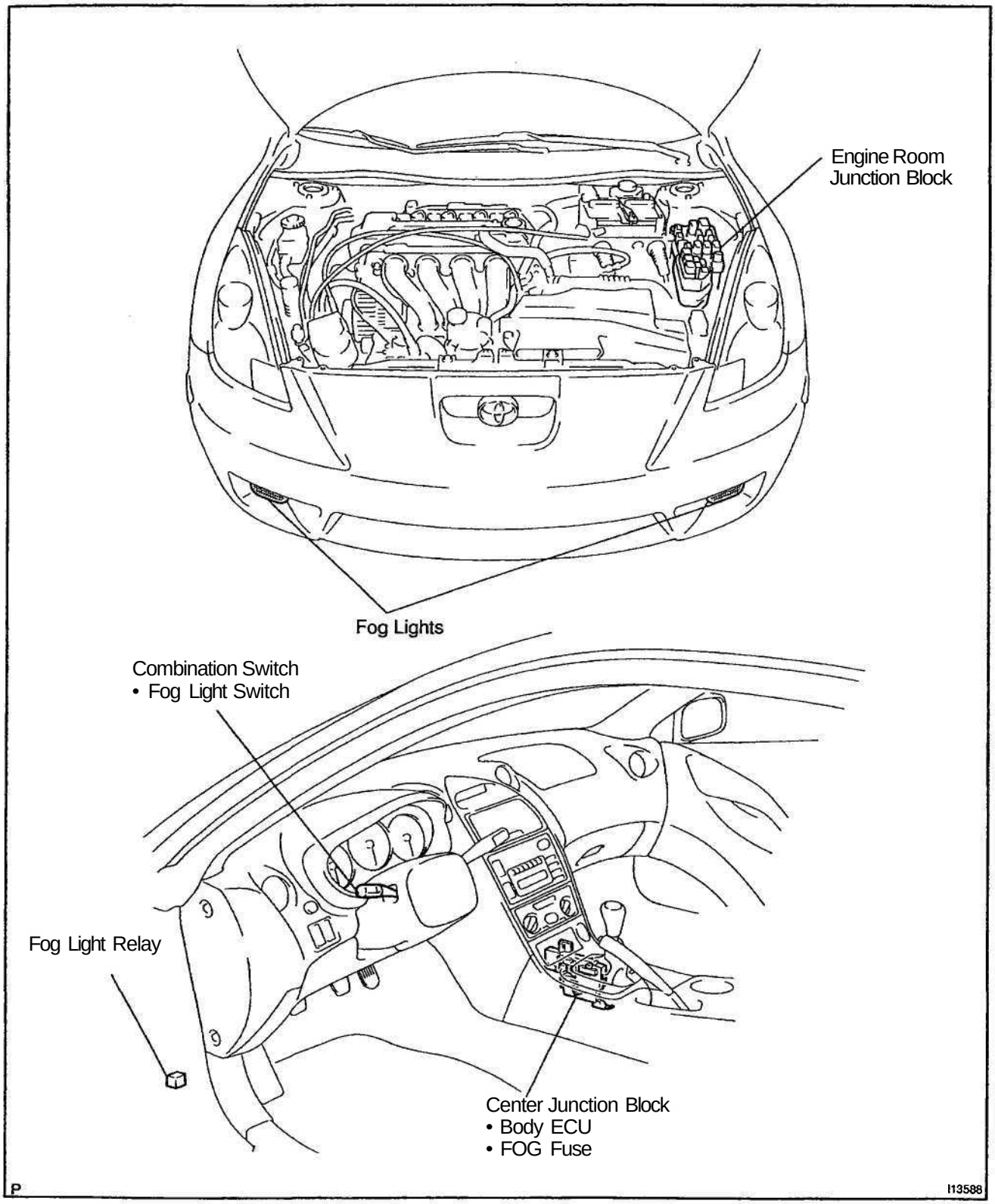

BE0OW–02

INSPECTION

1. INSPECT FRONT FOG LIGHT SWITCH CONTINUITY

Switch position	Tester connection	Specified condition
OFF	–	No continuity
ON	10-11	Continuity

If continuity is not as specified, replace the switch.

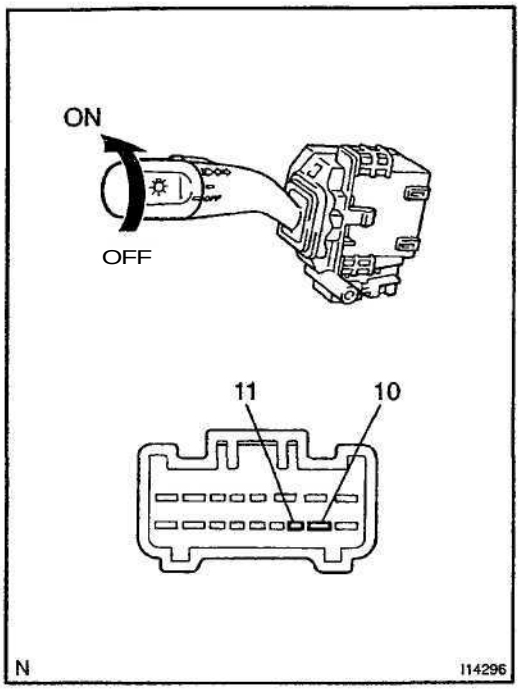

2. INSPECT FRONT FOG LIGHT RELAY CONTINUITY

Condition	Tester connection	Specified condition
Constant	1-2	Continuity
Apply B+ between terminals 1 and 2.	3-5	Continuity

If continuity is not as specified, replace the relay.

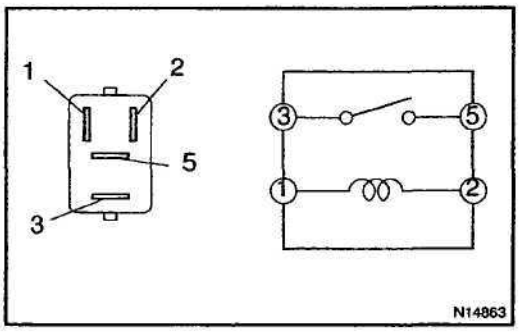

BE0QX-02

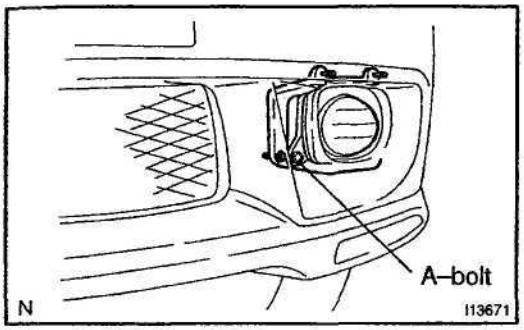

ADJUSTMENT

ADJUST FOG LIGHT AIM

A–bolt: Vertical Direction

TURN SIGNAL AND HAZARD WARNING SYSTEM

LOCATION

BE0CY-02

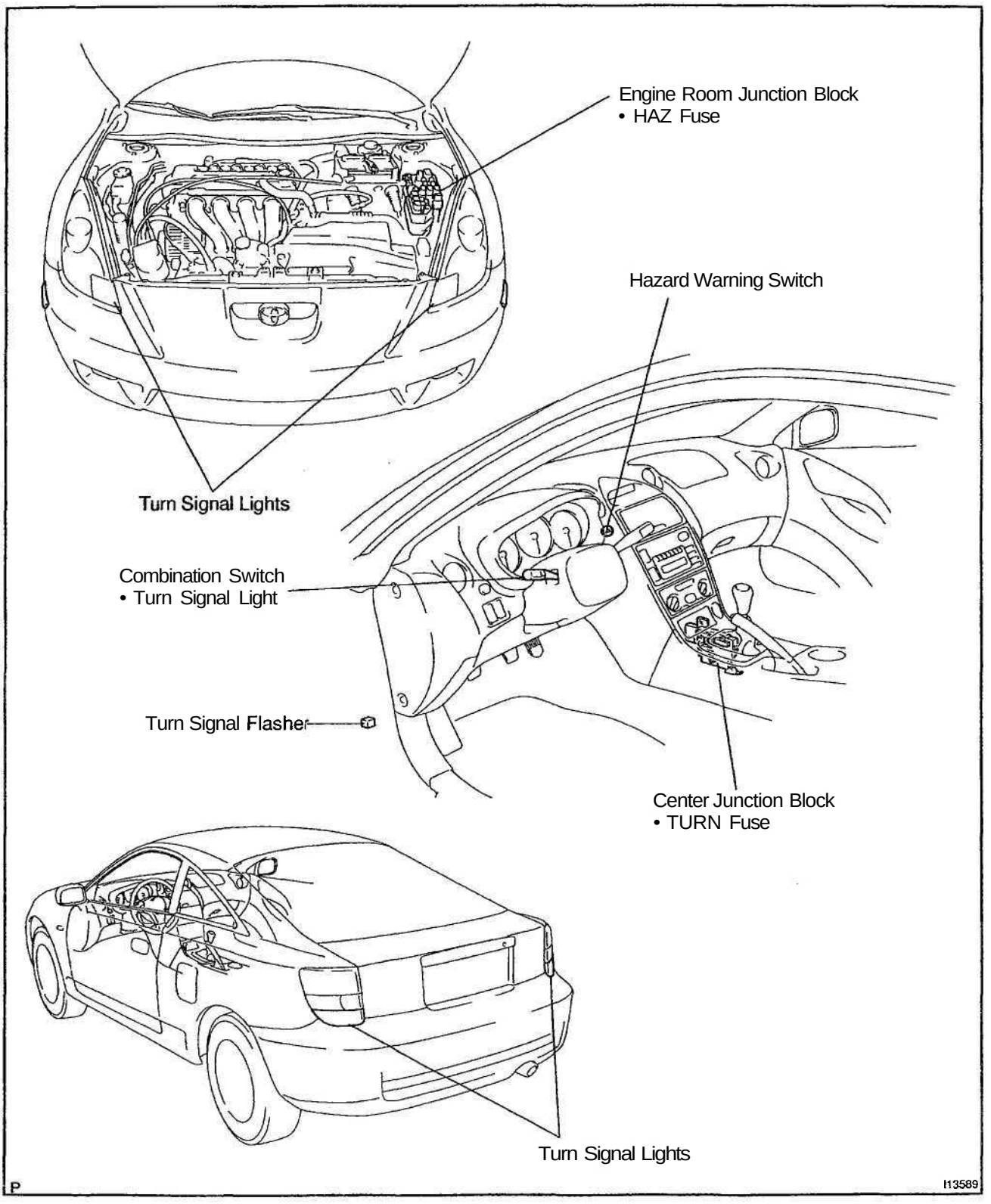

BE0OZ-02

INSPECTION

1. INSPECT TURN SIGNAL SWITCH CONTINUITY

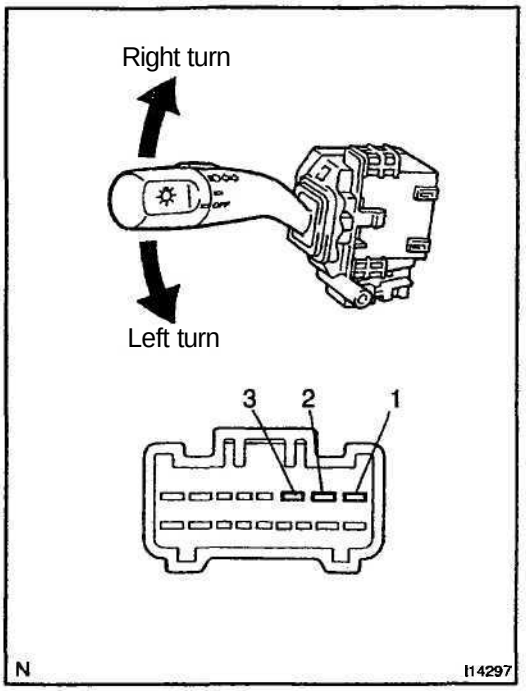

Switch position	Tester connection	Specified condition
Left turn	1-2	Continuity
Neutral	–	No continuity
Right turn	2-3	Continuity

If continuity is not as specified, replace the switch.

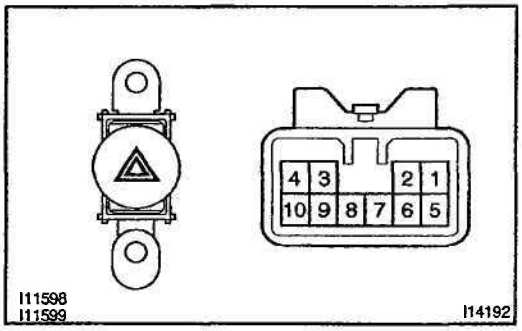

2. INSPECT HAZARD WARNING SWITCH CONTINUITY

Condition	Tester connection	Specified condition
OFF	5-7	Continuity
ON	5-6, 1-2-4	Continuity
Illumination circuit	8-9	Continuity

If continuity is not as specified, replace the switch.

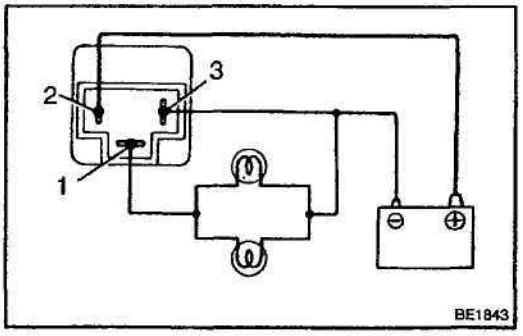

3. INSPECT TURN SIGNAL FLASHER OPERATION

(a) Connect the positive (+) lead from the battery to terminal 2 and the negative (–) lead to terminal 3.

(b) Connect the 2 turn signal light bulbs parallel to each other to terminals 1 and 3, check that the bulbs flash.

HINT:

- The turn signal lights should flash 60 or 120 times per minute.
- If one of the front or rear turn signal lights has an open circuit, the number of flashers will be more than 140 per minute.

If operation is not as specified, replace the flasher.

INTERIOR LIGHT SYSTEM

LOCATION

BE0P0-02

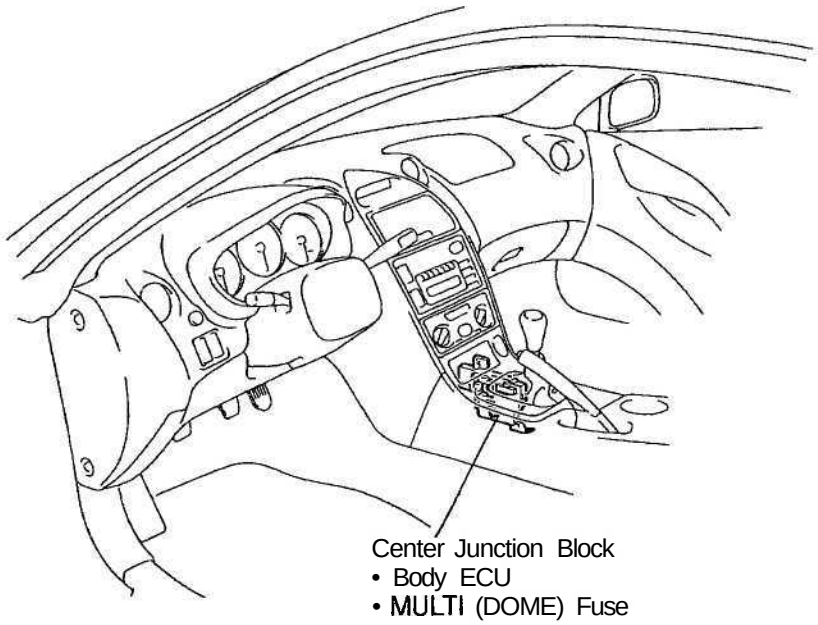

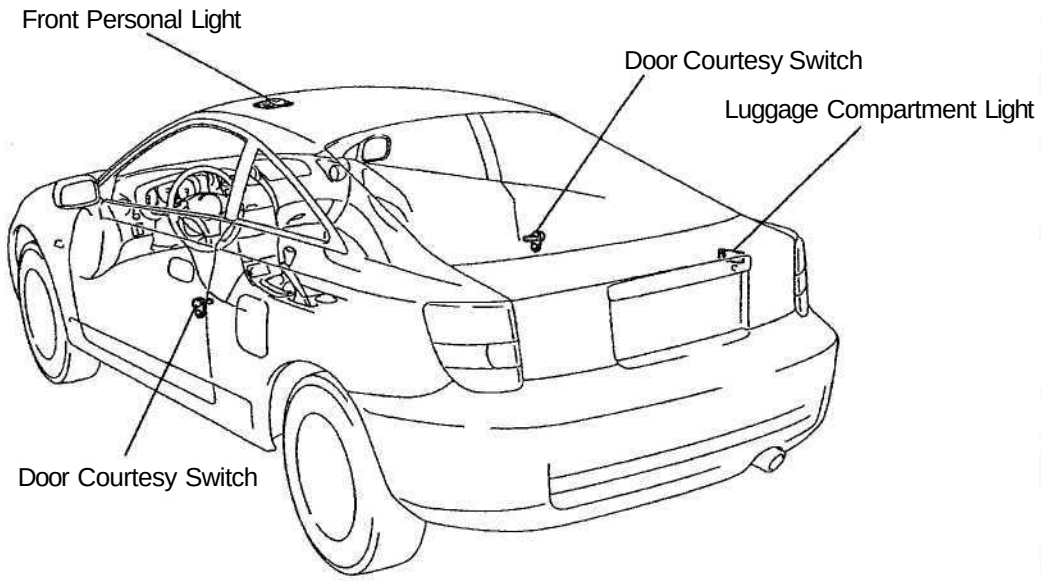

I13603

BE1CZ-01

INSPECTION

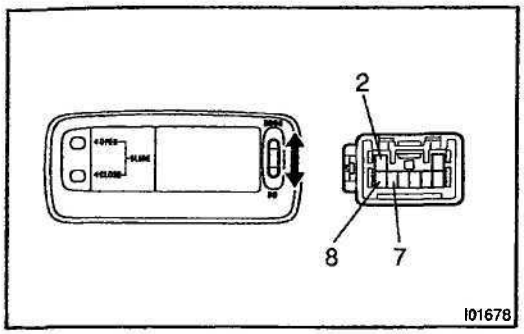

1. w/ Sliding roof:
INSPECT FRONT PERSONAL LIGHT SWITCH CONTINUITY

Switch position	Tester connection	Specified condition
OFF	–	No continuity
DOOR	2 - 7	Continuity
ON	2 - 8	Continuity

If continuity is not as specified, replace the light assembly or bulb.

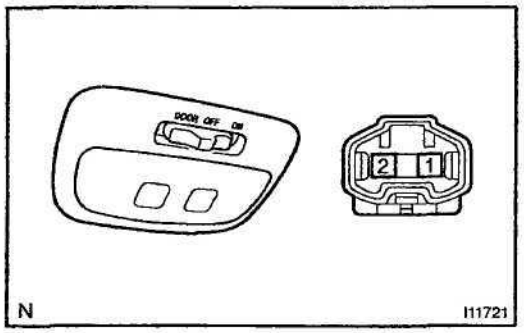

2. w/o Sliding roof:
INSPECT FRONT PERSONAL LIGHT CONTINUITY

Using an ohmmeter, check that continuity exists between terminals.

If continuity is not as specified, replace the light assembly or bulb.

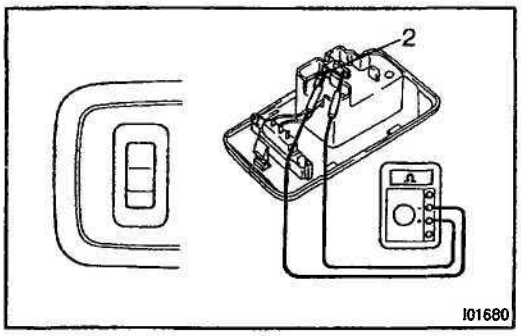

3. INSPECT REAR ROOM LIGHT CONTINUITY

(a) Disconnect the connector from the room light.

(b) Turn the room light switch ON, check that continuity exists between terminal 1 and 2.

If continuity is not as specified, replace the light assembly or bulb.

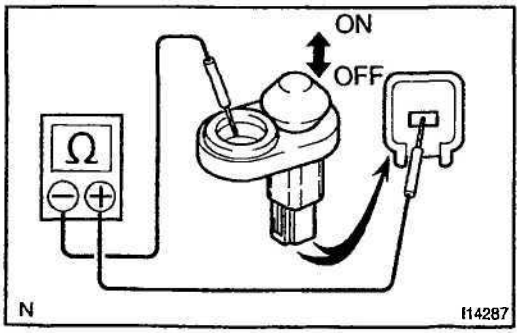

4. INSPECT DOOR COURTESY SWITCH CONTINUITY

(a) Check that continuity exists between terminals and the switch body with the switch ON (Switch pin released: opened door).

(b) Check that no continuity exists between terminals and the switch body with the switch OFF (Switch pin pushed in: closed door).

If operation is not as specified, replace the switch.

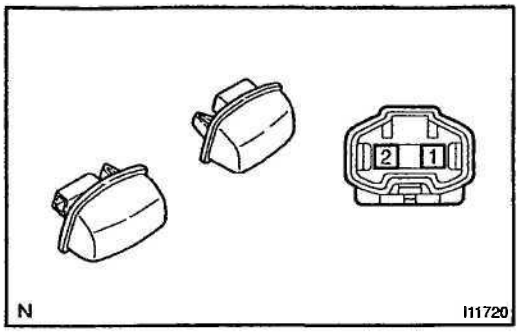

5. INSPECT LICENCE PLATE LIGHT CONTINUITY

Using an ohmmeter, check that continuity exists between terminals.

If continuity is not as specified, replace the light assembly or bulb.

BACK–UP LIGHT SYSTEM

LOCATION

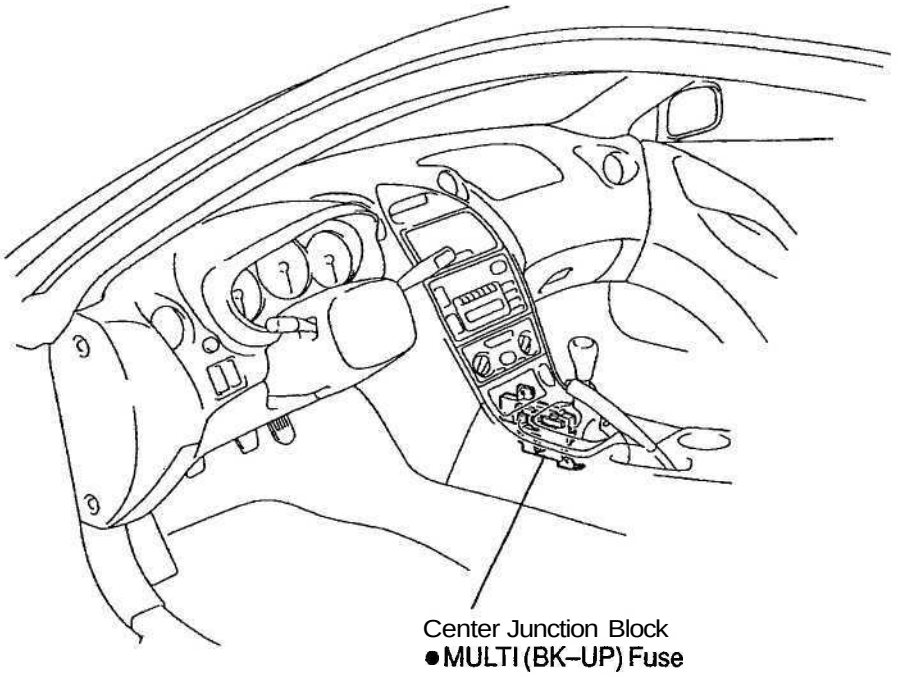

Center Junction Block
● MULTI (BK–UP) Fuse

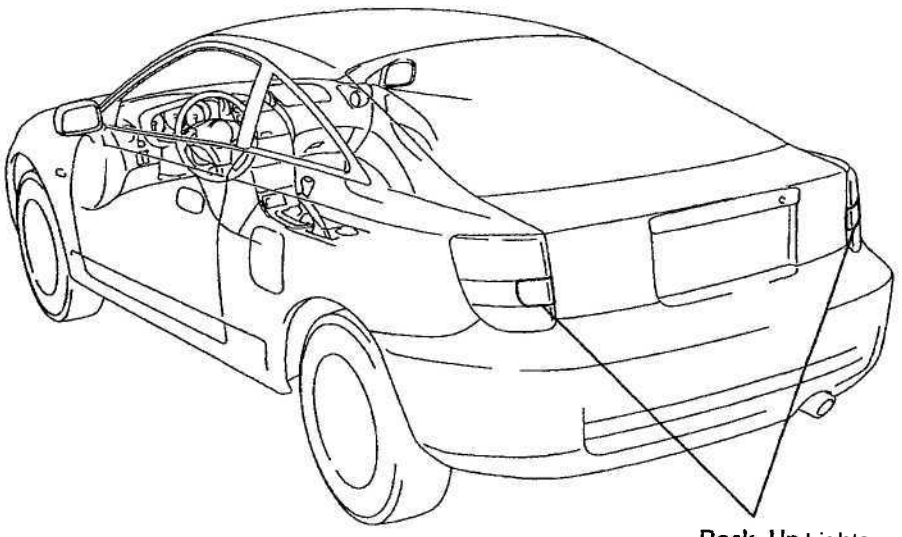

Back–Up Lights

P

I13590

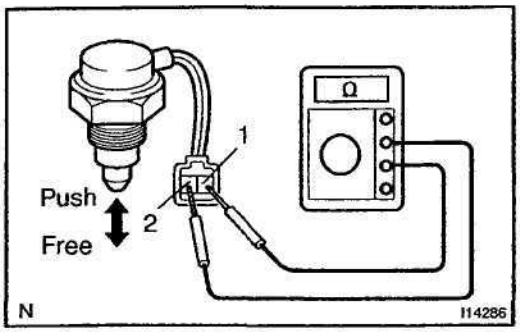

BE0P3-02

INSPECTION

1. INSPECT BACK-UP LIGHT SWITCH CONTINUITY

Switch position	Tester connection	Specified condition
Free	1 - 2	No continuity
Push	1 - 2	Continuity

If continuity is not as specified, replace the switch.

2. INSPECT PARK/NEUTRAL POSITION SWITCH CONTINUITY (See page DI–202, DI–261)

STOP LIGHT SYSTEM

LOCATION

BE0P4–02

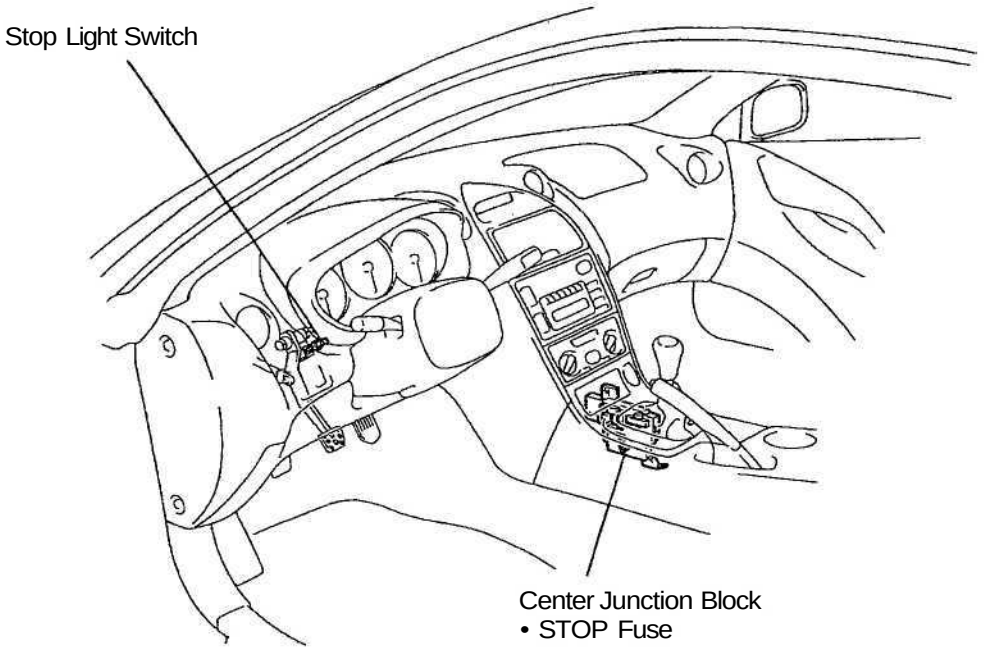

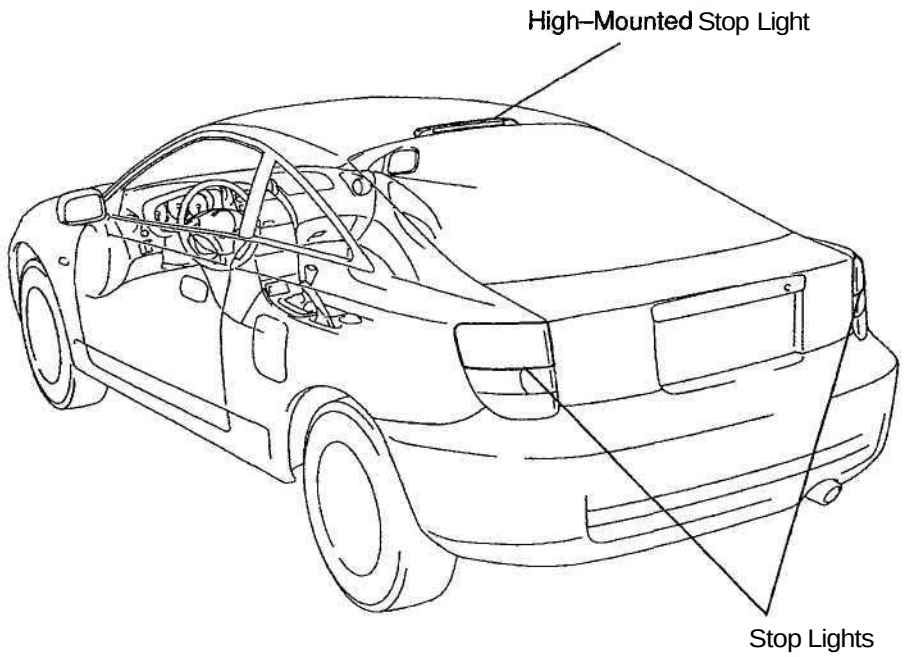

P

I13601

BE1D0-01

INSPECTION

INSPECT STOP LIGHT SWITCH CONTINUITY

w/o cruise control system:

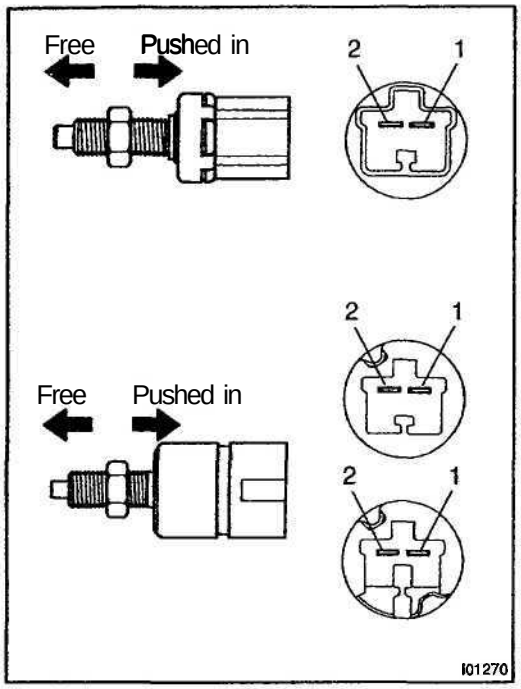

Switch position	Tester connection	Specified condition
Switch pin pushed in (Pedal released)	–	No continuity
Switch pin free (Pedal depressed)	1-2	Continuity

If continuity is not as specified, replace the switch.

w/ cruise control system:

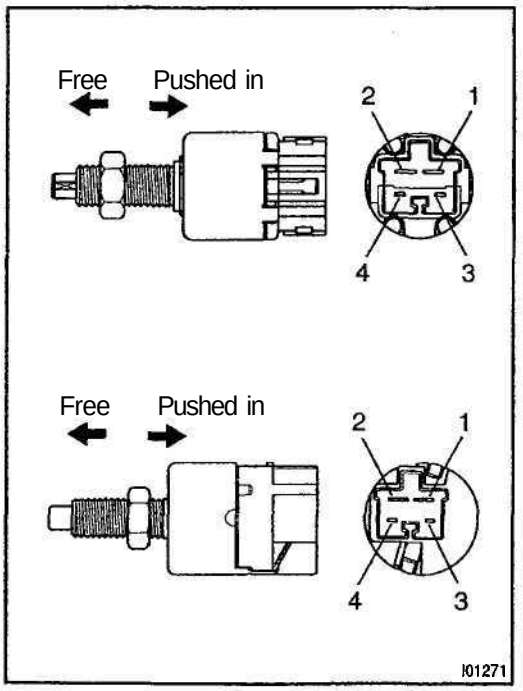

Switch position	Tester connection	Specified condition
Switch pin pushed in (Pedal released)	–	No continuity
Switch pin free (Pedal depressed)	1-2	Continuity

If continuity is not as specified, replace the switch.

WIPER AND WASHER SYSTEM

LOCATION

BE0PS-02

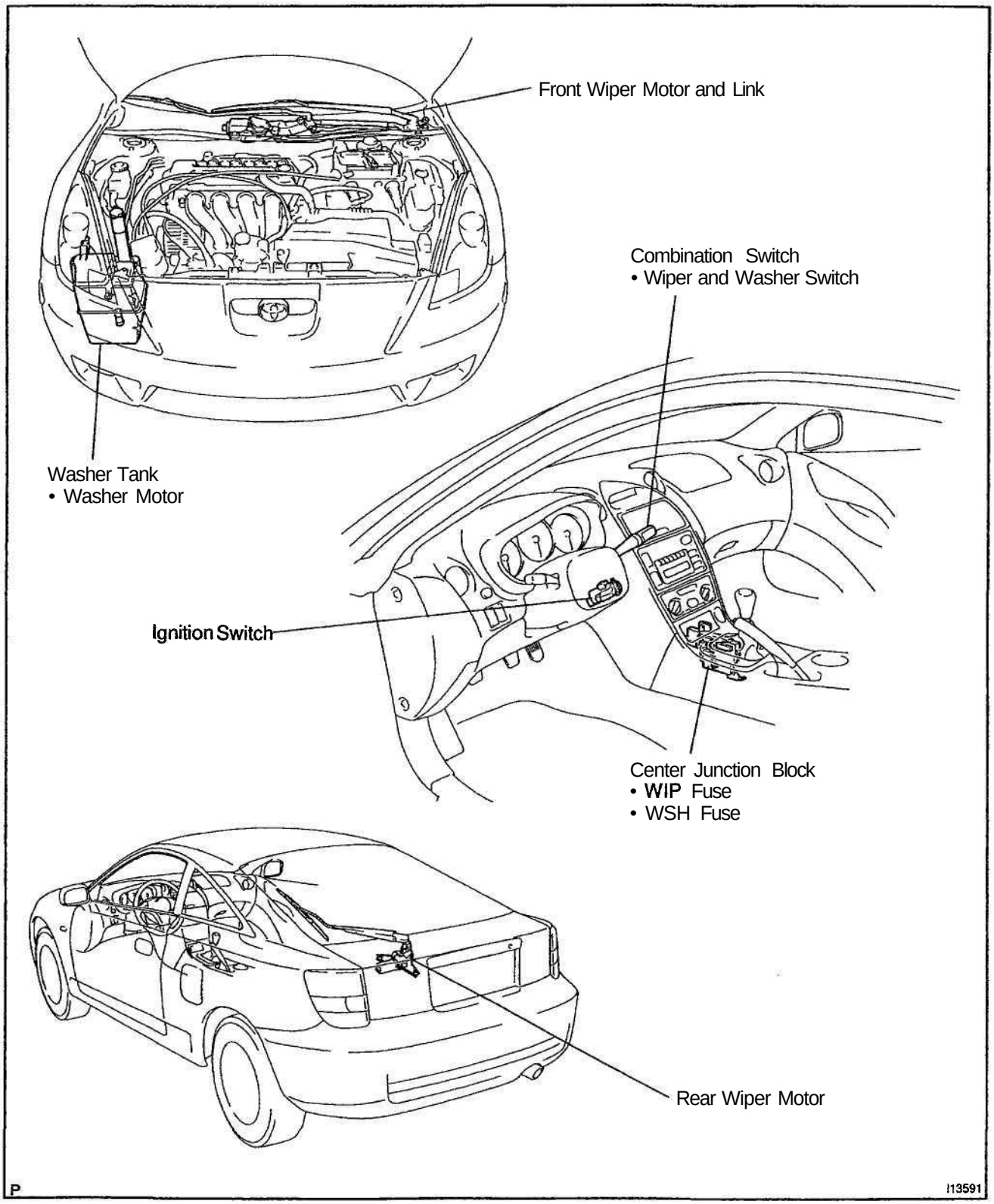

BE0P7-02

INSPECTION

1. INSPECT FRONT WIPER AND WASHER SWITCH CONTINUITY

Switch position	Tester connection	Specified condition
OFF	7-16	Continuity
MIST (w/ Mist wiper)	7-17	Continuity
INT (w/ Intermittent wiper)	7-16	Continuity
LO	7-17	Continuity
HI	8-17	Continuity
Washer ON	2-11	Continuity

If continuity is not as specified, replace the switch.

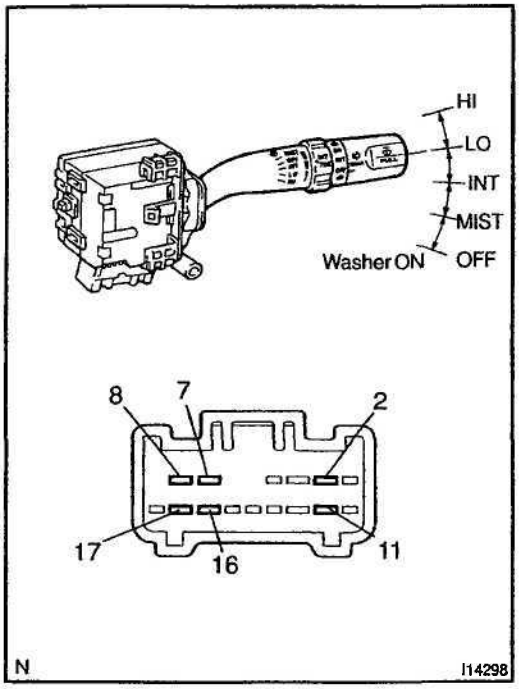

2. INSPECT FRONT WIPER INTERMITTENT OPERATION

(a) Turn the wiper switch to INT position.
(b) Turn the intermittent time control switch to FAST position.
(c) Connect the positive (+) lead from the battery to terminal 16 and the negative (-) lead to terminal 2.
(d) Connect the positive (+) lead from the voltmeter to terminal 7 and the negative (-) lead to terminal 2, check that the meter needle indicates battery voltage.

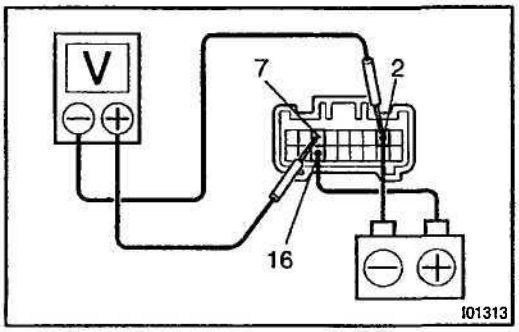

(e) After connecting terminal 16 to terminal 17, connect to terminal 2 to terminal 17, check the voltage rises from 0 volts to battery voltage with in the times, as shown in the table.

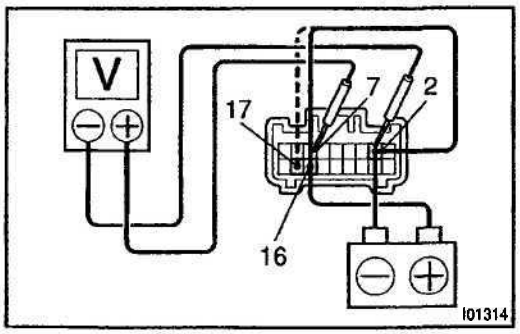

INT time control switch position	Voltage
FAST	Approx. 1 - 3 sec. ← Battery voltage ← 0 Volt
SLOW	Approx. 10 ~ 15secs. ← Battery voltage ← 0 Volt

If operation is not as specified, replace the wiper and washer switch.

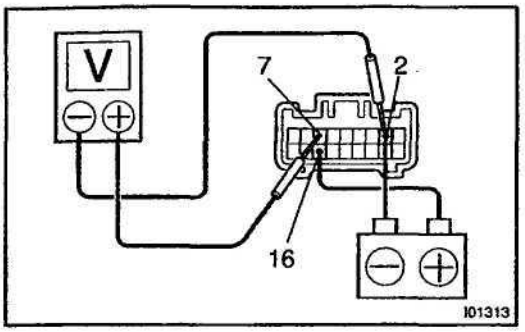

3. INSPECT FRONT WASHER LINKED OPERATION

(a) Connect the positive (+) lead from the battery to terminal 16 and the negative (-) lead to terminal 2.

(b) Connect the positive (+) lead from the voltmeter to terminal 7 and the negative (-) lead to terminal 2.

(c) Push in the washer switch, and check that the voltage changes, as shown in the table.

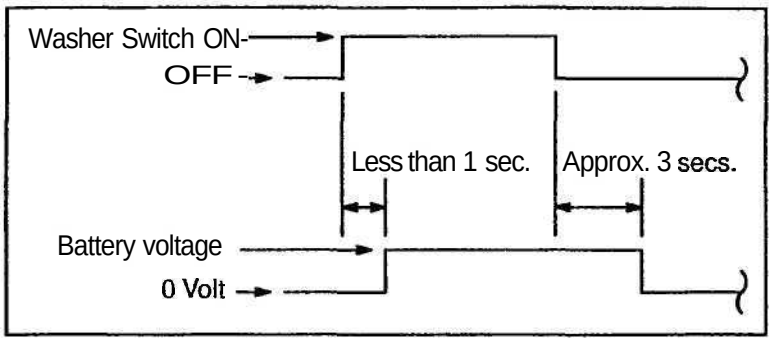

If operation is not as specified, replace the wiper and washer switch.

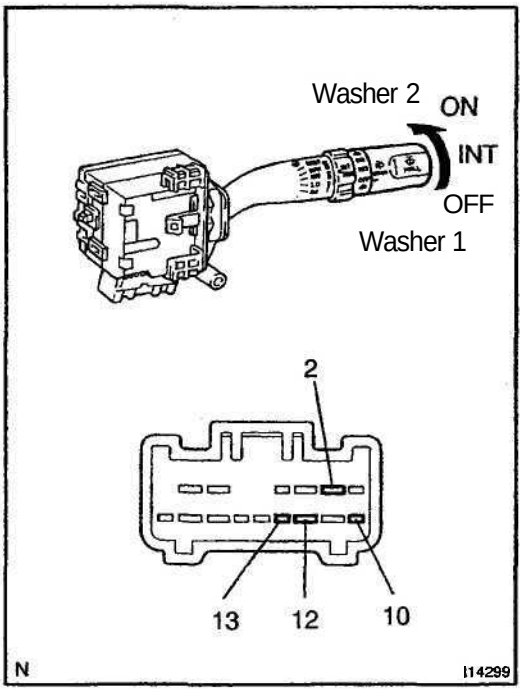

4. INSPECT REAR WIPER AND WASHER SWITCH CONTINUITY

Switch position	Tester connection	Specified condition
Washer 1	2 – 12	Continuity
OFF	–	No continuity
INT	2-13	Continuity
ON	2-10	Continuity
Washer 2	2-10-12	Continuity

If continuity is not as specified, replace the switch.

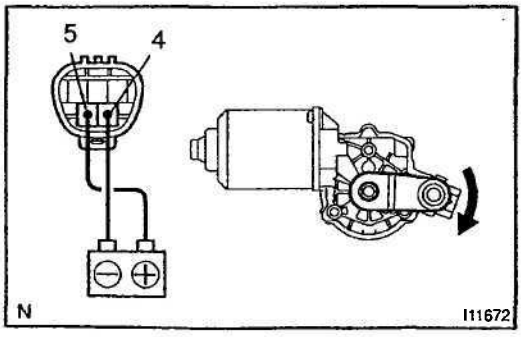

5. Low Speed:
INSPECT FRONT WIPER MOTOR OPERATION

Connect the positive (+) lead from the battery to terminal 5 and the negative (–) lead to terminal 4, check that the motor operates at low speed.

If operation is not as specified, replace the motor.

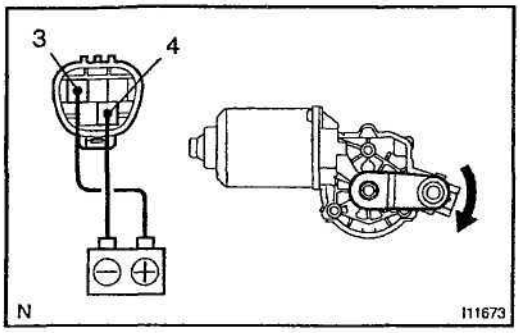

6. High Speed:
INSPECT FRONT WIPER MOTOR OPERATION

Connect the positive (+) lead from the battery to terminal 3 and the negative (-) lead to terminal 4, check that the motor operates at high speed.

If operation is not as specified, replace the motor.

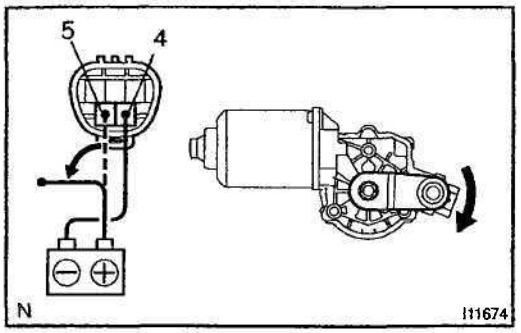

7. Stopping at Stop Position:
INSPECT FRONT WIPER MOTOR OPERATION

(a) Operate the motor at low speed and stop the motor operation anywhere except at the stop position by disconnecting positive (+) lead from terminal *5.*

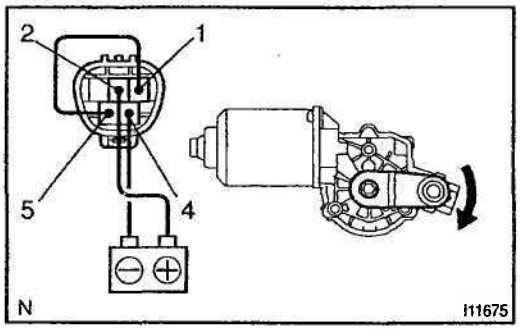

(b) Connect terminals 1 and 5.

(c) Connect the positive (+) lead from the battery to terminal 2 and negative (-) lead to terminal 4, check that the motor stops running at the stop position after the motor operates again.

If operation is not as specified, replace the motor.

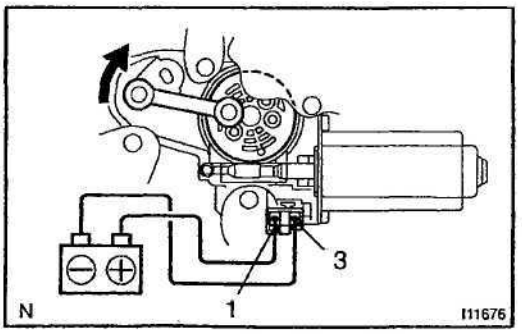

8. INSPECT REAR WIPER MOTOR AND RELAY OPERATION

(a) Connect the positive (+) lead from the battery to terminal 1, and the negative (-) lead to terminal 3 and the motor body, check that the motor operates.

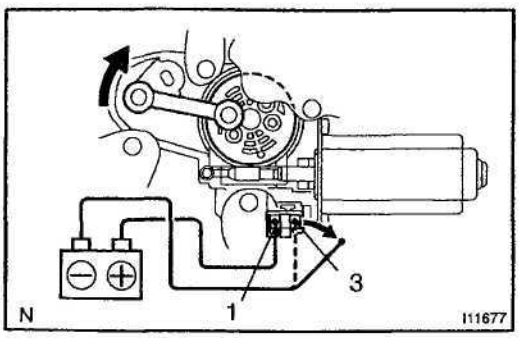

(b) Disconnect the negative {-) lead from terminal 3, check that the motor stops running at the stop position.

If operation is not as specified, replace the motor and relay.

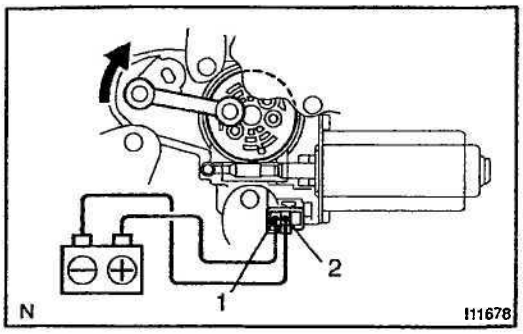

9. Intermittent:
INSPECT REAR WIPER MOTOR AND RELAY OPERATION

Connect the positive (+) lead from the battery to terminal 1, and the negative {-) lead to terminal 2 and the motor body, check that the motor operates intermittently for 9 – 15 seconds.
If operation is not as specified, replace the motor and relay.

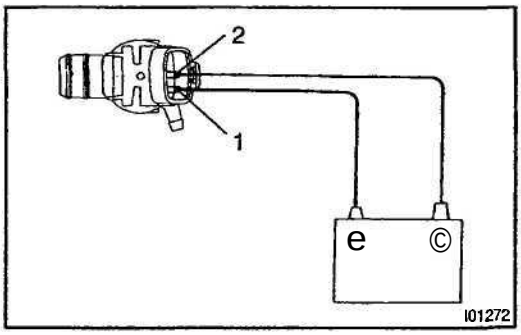

10. w/o Rear wiper:
INSPECT WASHER MOTOR OPERATION

Connect the positive (+) lead from the battery to terminal 2 and the negative (-) lead to terminal 1, check that the motor operates.

NOTICE:

These tests must be performed quickly (within 20 seconds) to prevent the coil from burning out.

If operation is not as specified, replace the motor.

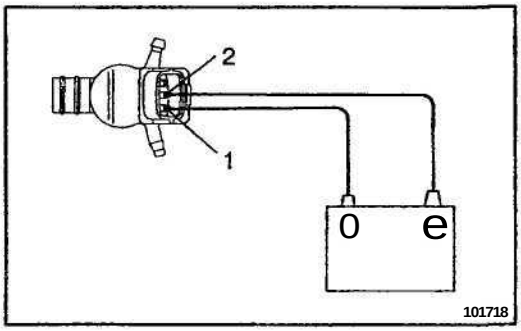

11. w/ Rear wiper:
INSPECT FRONT WASHER MOTOR OPERATION

Connect the positive (+) lead from the battery to terminal 2 and the negative (-) lead to terminal 1, check that the motor operates.

NOTICE:

These tests must be performed quickly (within 20 seconds) to prevent the coil from burning out.

If operation is not as specified, replace the motor.

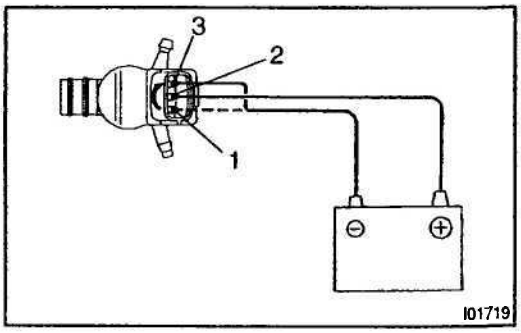

12. w/ Rear wiper:
INSPECT REAR WASHER MOTOR OPERATION

Connect the positive (+) lead from the battery to terminal 2 and the negative (–) lead to terminal 3, check that the motor operates.

NOTICE:

These tests must be performed quickly (within 20 seconds) to prevent the coil from burning out.

If operation is not as specified, replace the motor.

COMBINATION METER

LOCATION

BE1D1–01

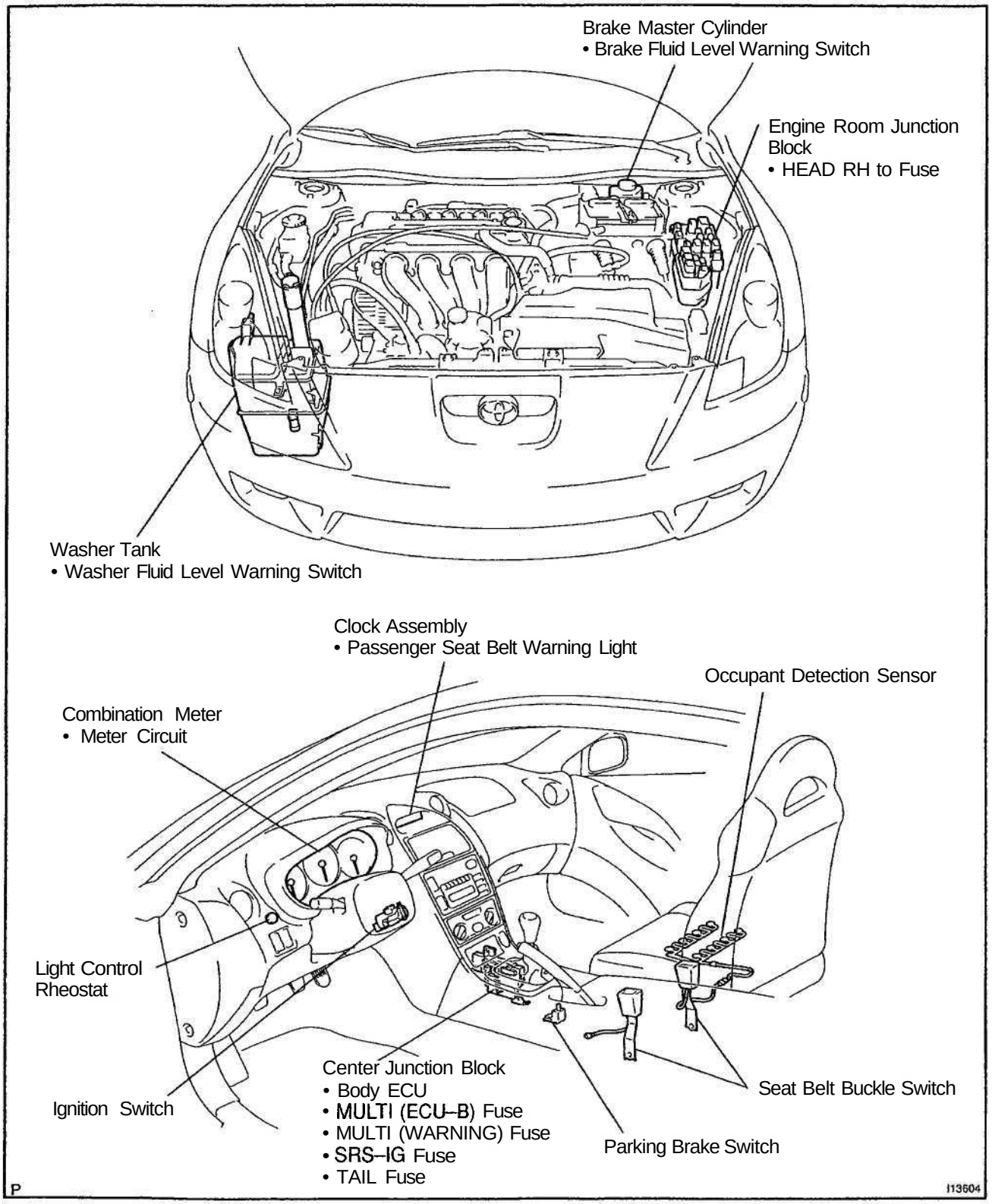

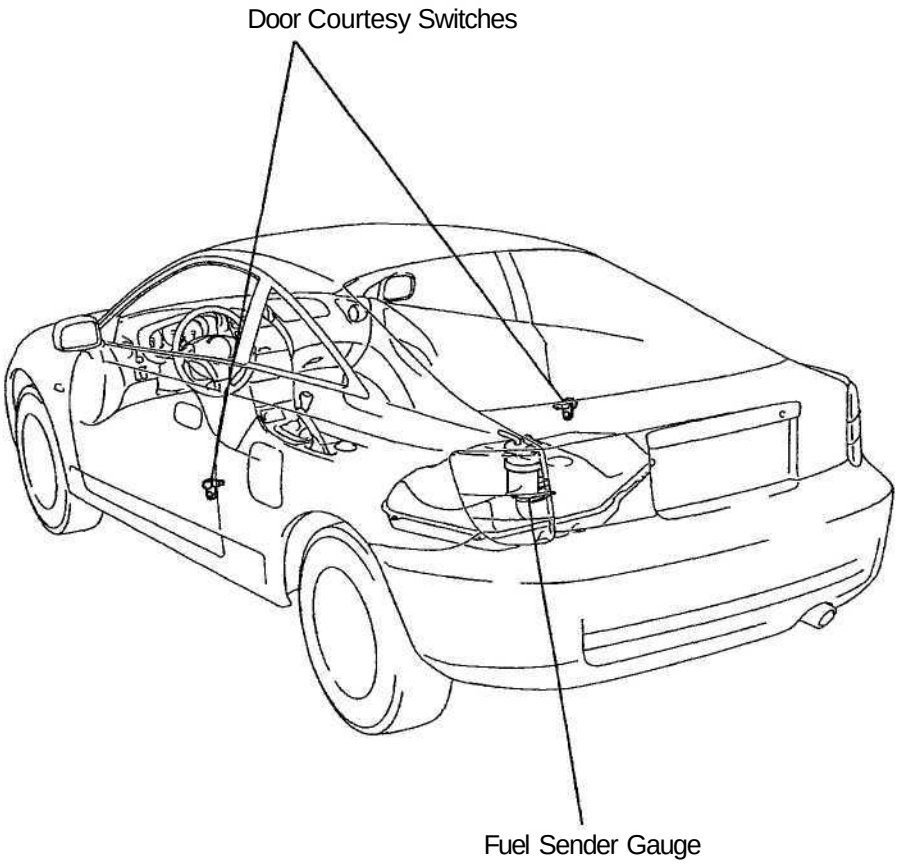

P

I13605

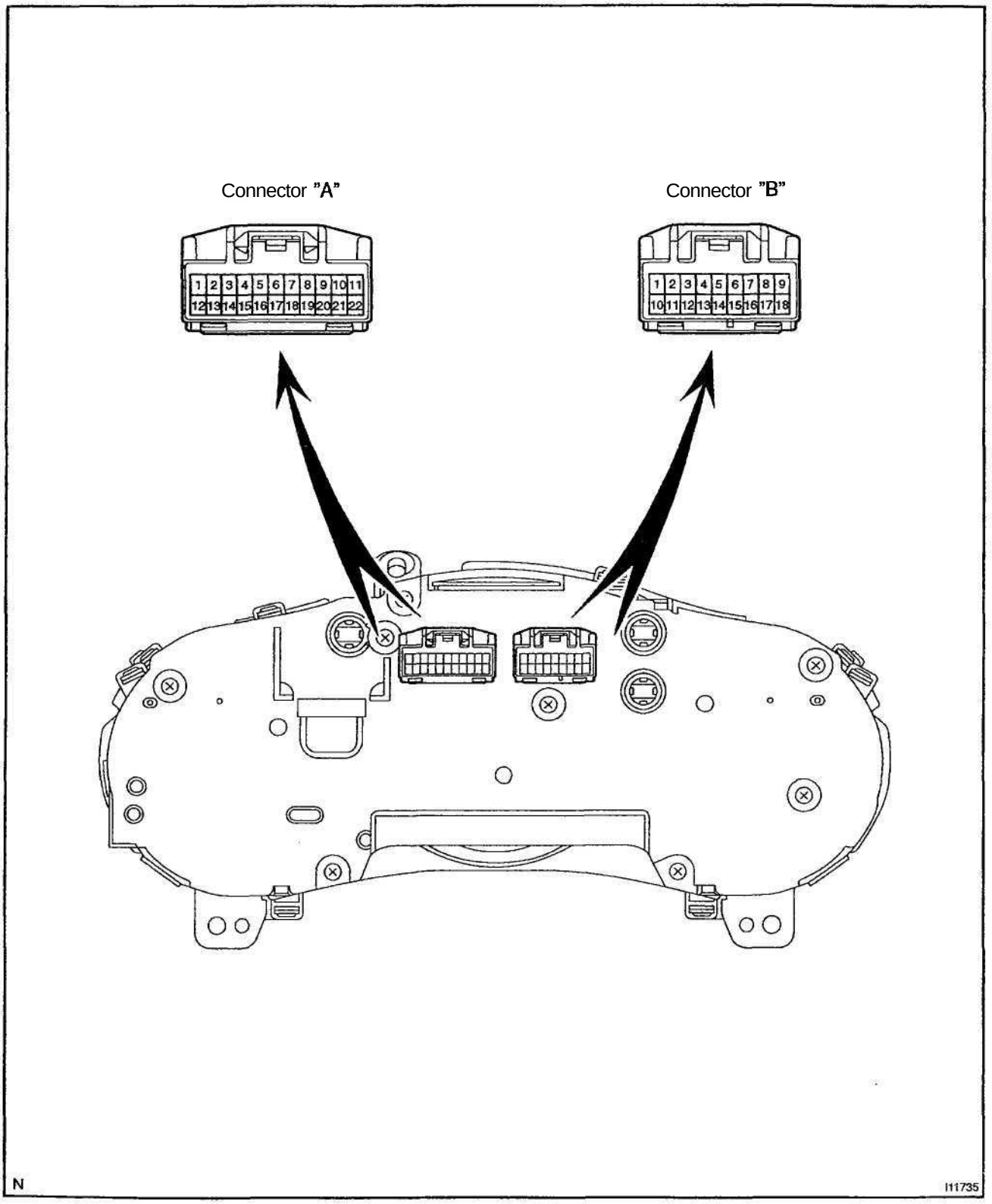
Connector "A"
Connector "B"
1 2 3 4 5 6 7 8 9 10 11
12 13 14 15 16 17 18 19 20 21 22
1 2 3 4 5 6 7 8 9
10 11 12 13 14 15 16 17 18
N
I11735

CIRCUIT

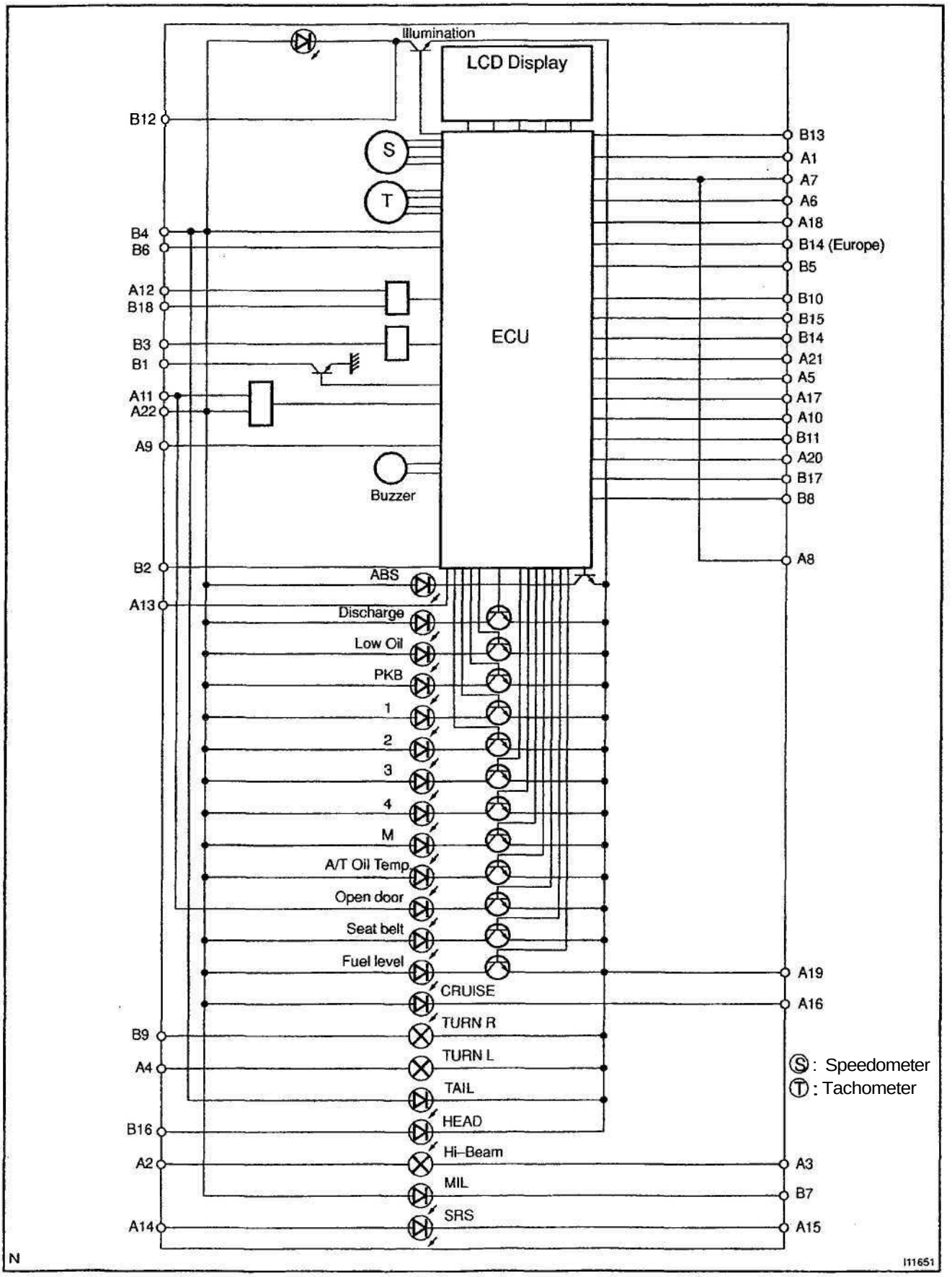
Illumination
LCD Display
ECU
S
T
Buzzer
B12
B4
B6
A12
B18
B3
B1
A11
A22
A9
B2
A13
B9
A4
B16
A2
A14
B13
A1
A7
A6
A18
B14 (Europe)
B5
B10
B15
B14
A21
A5
A17
A10
B11
A20
B17
B8
A8
A19
A16
A3
B7
A15
ABS
Discharge
Low Oil
PKB
1
2
3
4
M
A/T Oil Temp
Open door
Seat belt
Fuel level
CRUISE
TURN R
TURN L
TAIL
HEAD
Hi–Beam
MIL
SRS
Ⓢ: Speedometer
Ⓣ: Tachometer
N
I11651

No.		Wiring connector side
A	1	Sport mode switch
	2	Headlight dimmer switch
	3	Headlight
	4	Turn signal switch (Left side)
	5	Light control rheostat
	6	Evaporator temp. sensor
	7	Ground
	8	Ground
	9	Speed control unit
	10	Ground
	11	ECU–B Fuse
	12	ECM (MPX circuit)
	13	Heater main relay
	14	SRS Fuse
	15	Airbag sensor assembly
	16	Cruise control ECU
	17	Light control rheostat
	18	Evaporator temp. sensor
	19	Ground
	20	Speed sensor (SI terminal)
	21	Back–up light switch
	22	WARNING Fuse
B	1	Generator
	2	Clock (Passenger seat belt warning)
	3	Body ECU
	4	TAIL Fuse
	5	A/C ECU
	6	ECM (Tacho signal)
	7	ECM
	8	ABS ECU (Parking brake switch signal)
	9	Turn signal switch (Right side)
	10	A/C control panel (A/C switch indicator)
	11	ABS ECU
	12	Automatic light control sensor
	13	O/D off switch
	14	Front defogger switch
	15	A/C switch
	16	HEAD RH–LO Fuse
	17	ABS ECU
	18	ECM (MPX circuit)

MPX: Multiplex communication
Temp. : Temperature

BE1D2-01

COMPONENTS

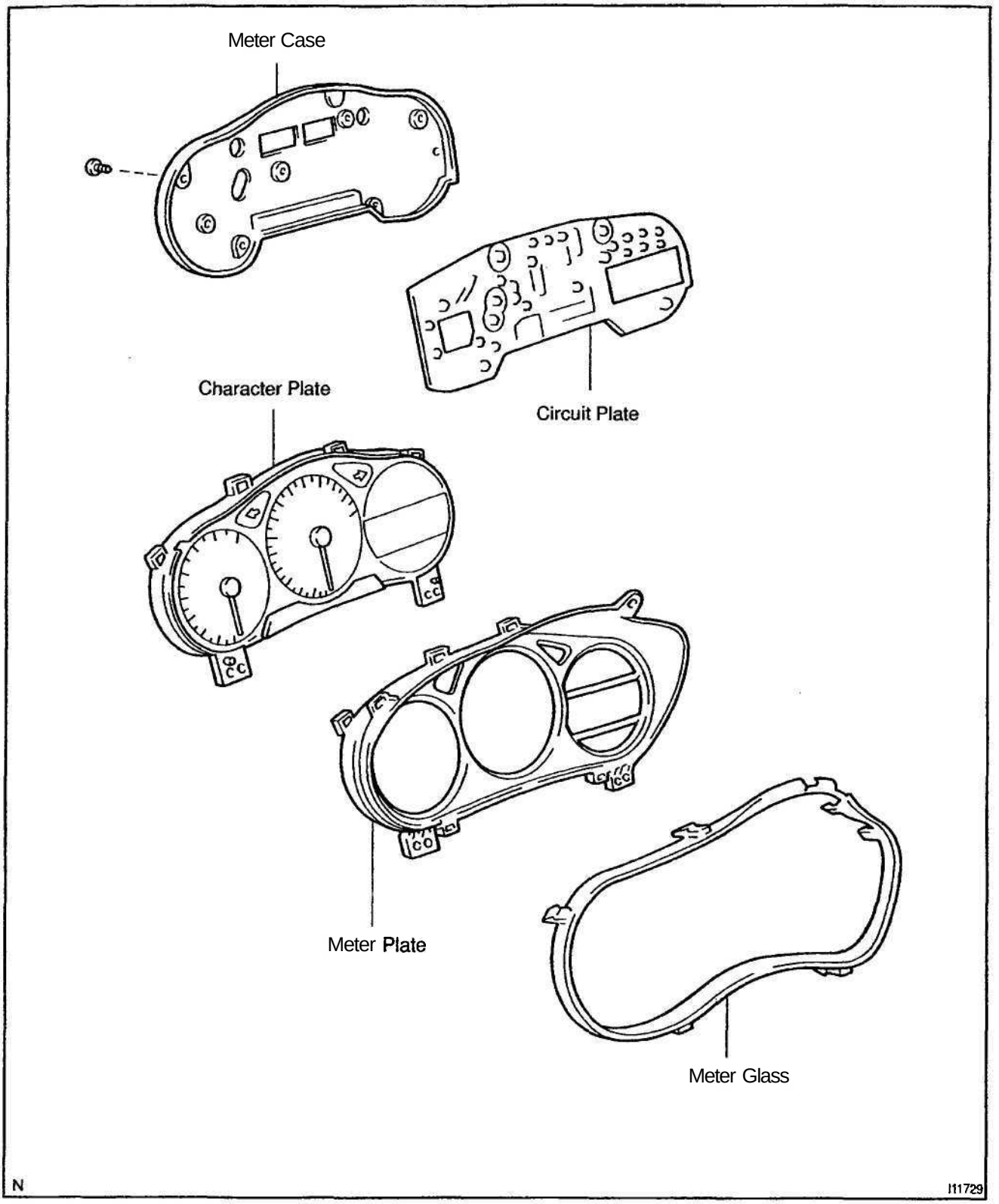

BE1D3-01

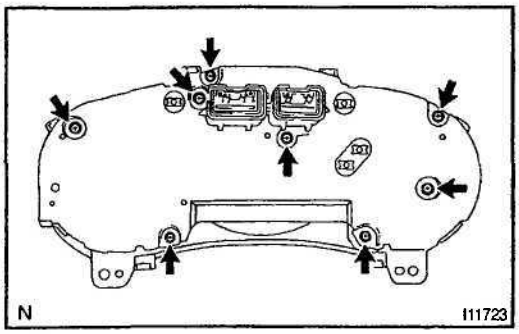

DISASSEMBLY

COMBINATION METER COVER:

(a) Remove the 8 screws.

(b) Remove the combination meter cover.

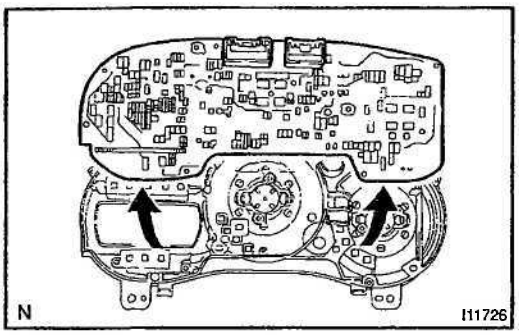

(c) Remove the meter circuit plate.

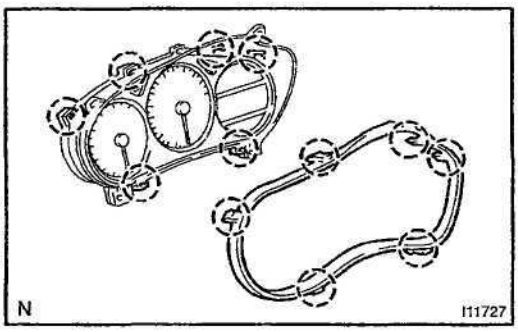

(d) Remove the 6 clips and the meter glass.

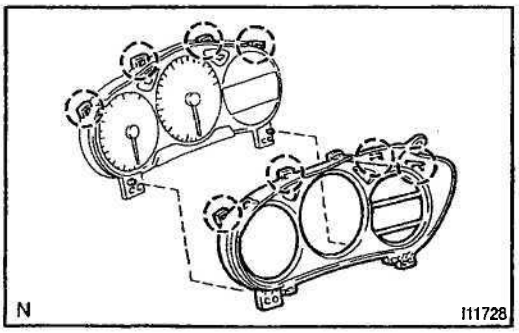

(e) Remove the 4 clips and the meter plate.

BE1D4-01

INSPECTION

1. INSPECT SPEEDOMETER ON–VEHICLE

Using a speedometer tester, inspect the speedometer for allowable indication error and check the operation of the odometer.

HINT:

Tire wear and tire over or under inflation will increase the indication error.

If error is excessive, replace the speedometer.

USA (mph)		CANADA (km/h)	
Standard indication	Allowable range	Standard indication	Allowable range
20	19–22	20	18-23
40	39 – 42.5	40	40 – 44
60	59.5-63.5	60	60 – 64.5
80	80 – 85	80	80-85
100	100 – 105.5	100	100-105
120	120 – 125.5	120	120 – 125.5
		140	140-146
		160	160-167

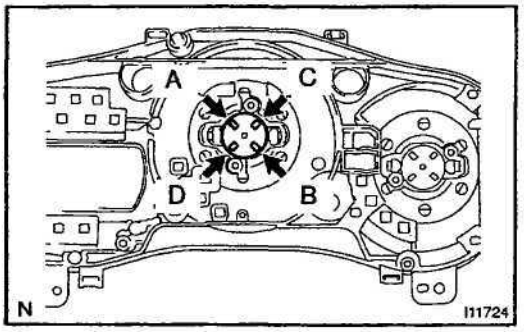

2. INSPECT SPEEDOMETER RESISTANCE

Measure the resistance between terminals with fixing pointer to the stopper.

Tester connection	Resistance (Ω)
A - B	250
C - D	250

If resistance value is not as specified, replace the meter.

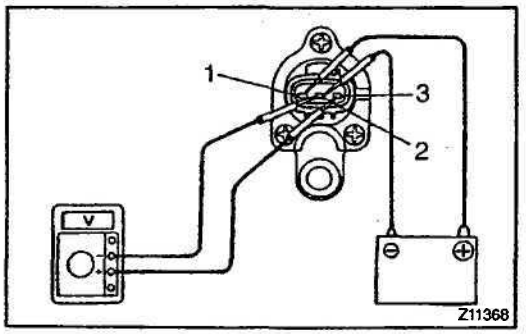

3. INSPECT VEHICLE SPEED SENSOR OPERATION

(a) Connect the positive (+) lead from battery to terminal 1 and negative (-) lead to terminal 2.

(b) Connect the positive (+) lead from tester to terminal 3 and negative (-) lead to terminal 2.

(c) Rotate shaft.

(d) Check that there is voltage change from approx. 0 V to 11 V or more between terminals 2 and 3.

HINT:

The voltage change should be 4 times for every revolution of the speed sensor shaft.

If operation is not as specified, replace the sensor.

4. INSPECT TACHOMETER ON–VEHICLE

(a) Connect a tune–up test tachometer, and start the engine.

NOTICE:

Reversing the connection of the tachometer will damage the transistors and diodes inside.

(b) Compare the tester indications with tachometer indications.

RPM (DC 13.5 V, 25 °C (77 °F))

Standard indication	Allowable range
700	700 – 770
1,000	900-1,100
2,000	1,850-2,150
3,000	2,800 – 3,200
4,000	3,800-4,200
5,000	4,800-5,200
6,000	5,800-6,200
7,000	6,800-7,200

If error is excessive, replace the tachometer.

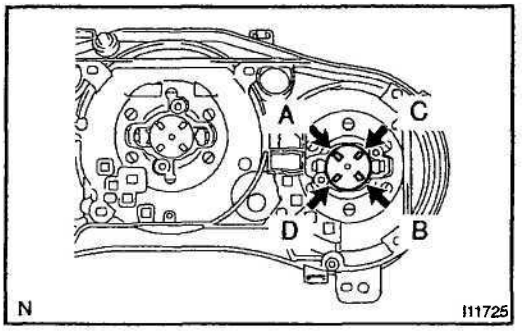

5. INSPECT TACHOMETER RESISTANCE

Measure the resistance between terminals with fixing pointer to the stopper.

Tester connection	Resistance (O)
A - B	250
C - D	250

If resistance value is not as specified, replace the meter.

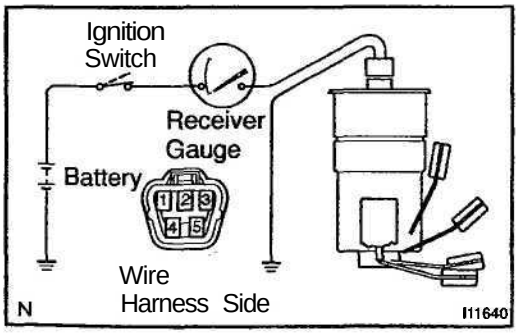

6. INSPECT FUEL RECEIVER GAUGE OPERATION

(a) Disconnect the connector from the sender gauge assembly.

(b) Turn the ignition switch ON, check that the receiver gauge needle indicates **EMPTY.**

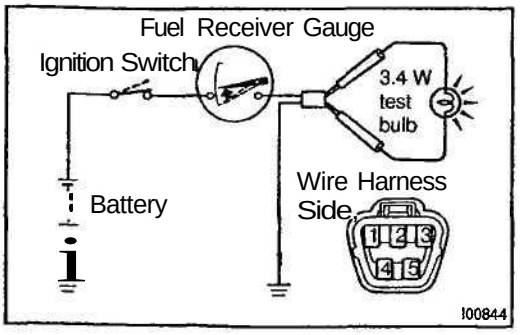

(c) Connect terminals 2 and 3 of the wire harness side connector through a 3.4 W test bulb.

(d) Turn the ignition switch ON, check that the bulb lights up and receiver gauge needle indicators EMPTY.

If operation is not as specified, inspect the sender gauge resistance.

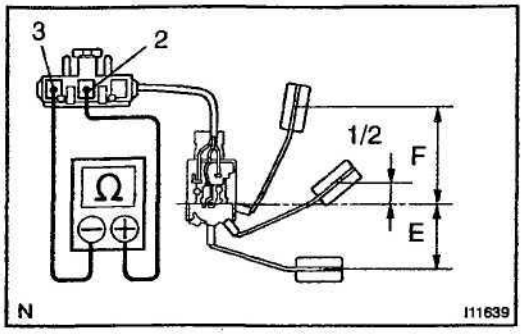

7. INSPECT FUEL SENDER GAUGE RESISTANCE

Measure the resistance between terminals 2 and 3 for each float position.

Float position: mm (in.)	Resistance (Ω)
F: Approx. 75.9 (2.99)	Approx. 3.0
1/2: Approx. 17.2 (0.68)	Approx. 31.6
E: Approx. 50.8 (2-00)	Approx. 110.0

If resistance value is not as specified, replace the sender gauge.

If resistance value is as specified, replace the combination meter.

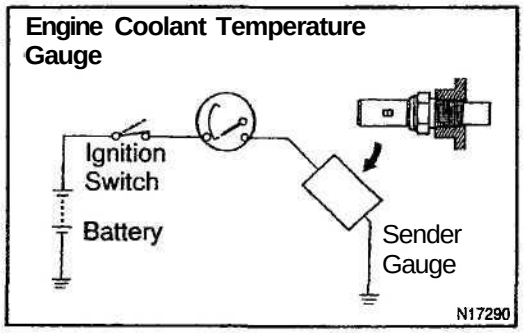

8. INSPECT ENGINE COOLANT TEMPERATURE RECEIVER GAUGE OPERATION

(a) Disconnect the connector from the sender gauge.

(b) Turn the ignition switch ON, check that the receiver gauge needle indicates COOL.

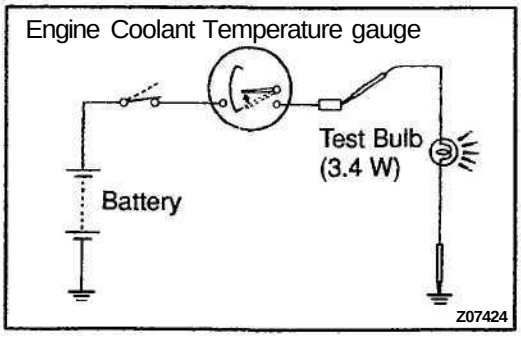

(c) Ground terminal of the wire harness side connector through a 3.4 W test bulb.

(d) Turn the ignition switch ON, check that the bulb lights up and the receiver gauge needle moves toward the hot side.

If operation is not as specified, inspect the sender gauge.

Then recheck the system.

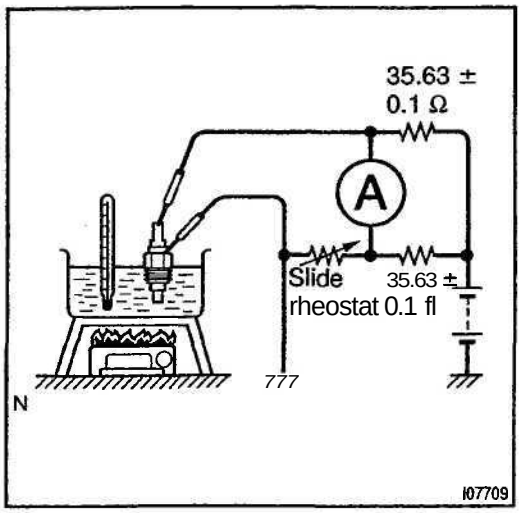

9. INSPECT ENGINE COOLANT TEMPERATURE SENDER GAUGE RESISTANCE

Connect the wire harness as shown in the illustration, and adjust the ammeter pointer to indicate "0" using the slide rheostat, then read the rheostat indication.

Temperature °C (°F)	Resistance (Ω)
50 (122.0)	160 – 240
120 (248.0)	17.1 -21.2

If resistance value is not as specified, replace the engine coolant temperature sender gauge.

If resistance value is as specified, replace the combination meter.

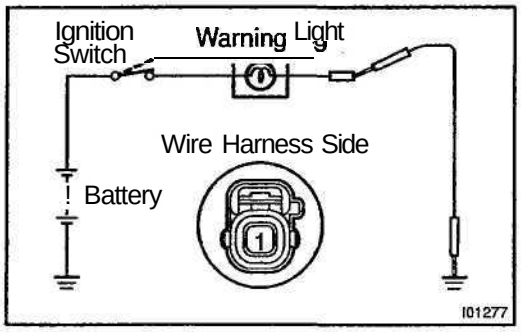

10. INSPECT LOW OIL PRESSURE WARNING LIGHT

(a) Disconnect the connector from the warning switch and ground terminal of the wire harness side connector.

(b) Turn the ignition switch ON, check that the warning light lights up.

If the warning light does not light up, test the bulb or inspect wire harness.

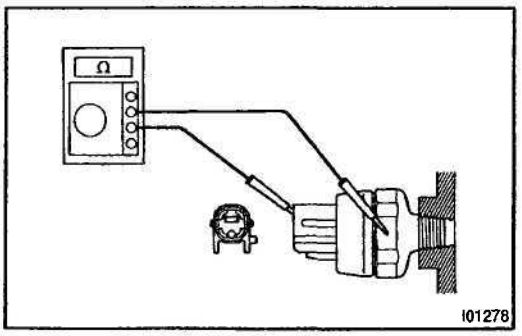

11. INSPECT LOW OIL PRESSURE SWITCH CONTINUITY

(a) Check that continuity exists between terminal and ground with the engine stopped.

(b) Check that no continuity exists between terminal and ground with the engine running.

HINT:

Oil pressure should be over 24.5 kPa (0.25 kgf/cm^2, 3.55 psi)

If operation is not as specified, replace the switch.

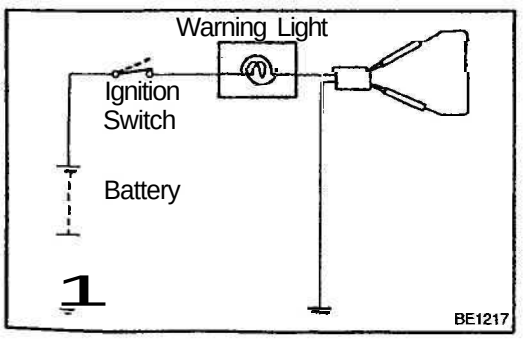

12. **INSPECT BRAKE WARNING SYSTEM LIGHT**

(a) Disconnect the connector from the brake fluid warning switch.

(b) Connect terminals of the wire harness side of the level warning switch connector.

(c) Start the engine, check that the warning light lights up.

If the warning light does not light up, test the bulb or wire harness.

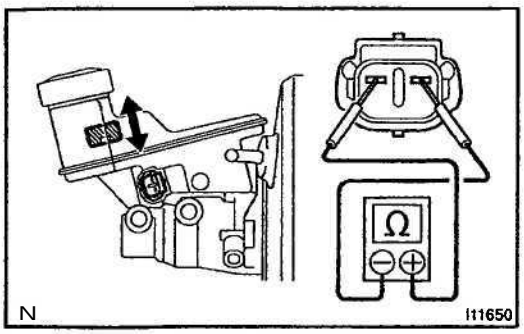

13. INSPECT BRAKE FLUID LEVEL WARNING SWITCH CONTINUITY

(a) Remove the reservoir tank cap and strainer.
(b) Disconnect the connector.
(c) Check that no continuity exists between terminals with the switch OFF (float up).
(d) Use syphon, etc. to take fluid out of the reservoir tank.
(e) Check that continuity exists between terminals with the switch ON (float down).
(f) Pour the fluid back in the reservoir tank.

If operation is not as specified, replace the switch.

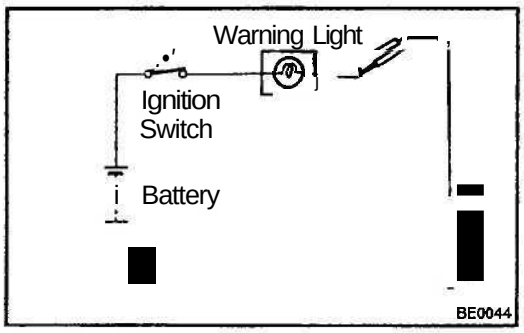

14. INSPECT PARKING BRAKE WARNING LIGHT

(a) Disconnect the connector from the parking brake switch.
(b) Ground terminal of the wire harness side connector.
(c) Start the engine, check that the warning light lights up.

If the warning light does not light up, test the bulb or inspect wire harness.

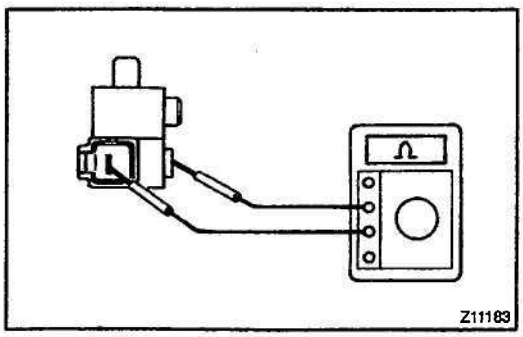

15. INSPECT PARKING BRAKE SWITCH CONTINUITY

(a) Check that continuity exists between terminal and switch body with the switch ON (switch pin released).
(b) Check that no continuity exists between terminal and switch body with the switch OFF (switch pin pushed in).

If operation is not as specified, replace the switch or inspect ground point.

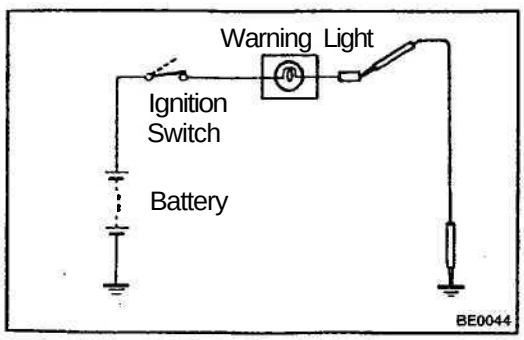

16. INSPECT OPEN DOOR WARNING LIGHT

Disconnect the connector from the door courtesy switch, and ground terminal 1 of the wire harness side connector and check that the warning light lights up.

If the warning light does not light up, inspect the bulb or wire harness.

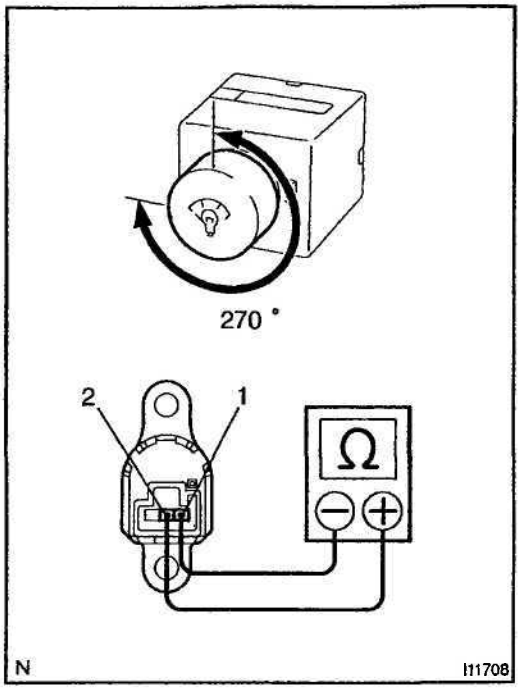

17. INSPECT LIGHT CONTROL RHEOSTAT OPERATION

Gradually, turn the rheostat knob from the bright side to dark side and check that the resistance decreases from 10 kΩ to 0 Ω between terminal 2 and 1. (Rheostat knob turned to clockwise)

If operation is not as specified, replace the rheostat light control.

ELECTRIC TENSION REDUCER SYSTEM

LOCATION

BE0P8-02

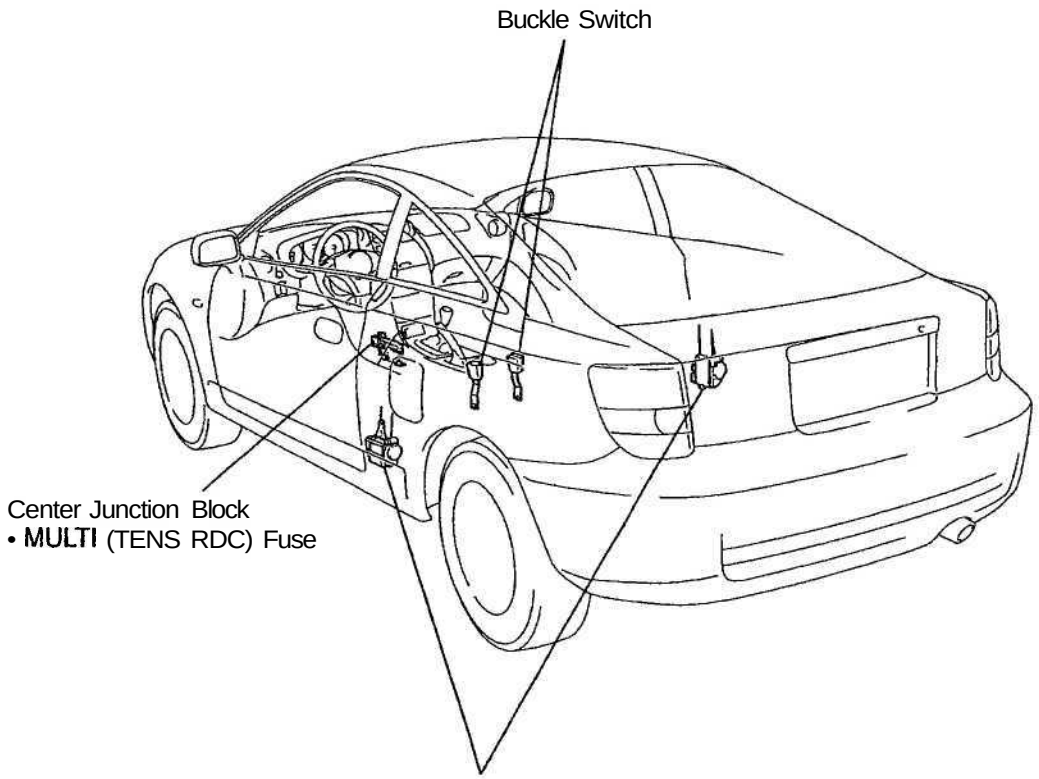

P

I13594

BE0PC-02

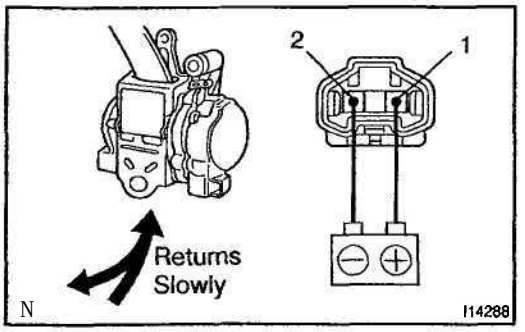

INSPECTION

1. INSPECT TENSION REDUCER SOLENOID OPERATION

(a) Connect the positive (+) lead from the battery to terminal 1, and the negative (-) lead to terminal 2.

(b) Pull the belt upward and check that the belt is slowly retracted when released.

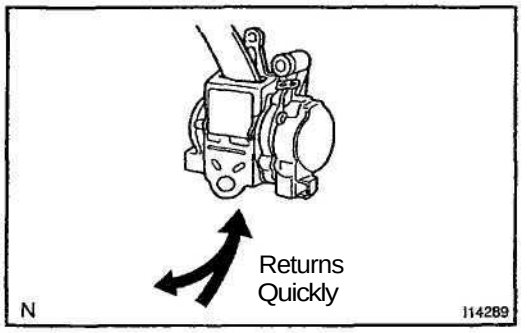

(c) Disconnect the lead from the battery.

(d) Pull the belt upward and check that the belt is retracted more quickly when released than in (b).

HINT:

Do not tilt the retractor.

If the operation is not as specified, replace the front seat outer belt assembly.

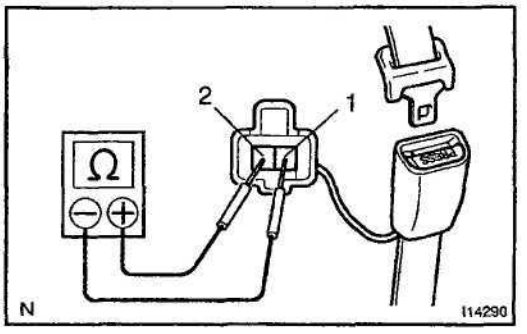

2. INSPECT BUCKLE SWITCH CONTINUITY

(a) Check that continuity exists between terminals of the switch side connector with the switch ON (belt fastened).

(b) Check that no continuity exists between terminals of the switch side connector with the switch OFF (belt unfastened).

If operation is not as specified, replace the seat belt inner.

DEFOGGER SYSTEM

LOCATION

BE0PD-02

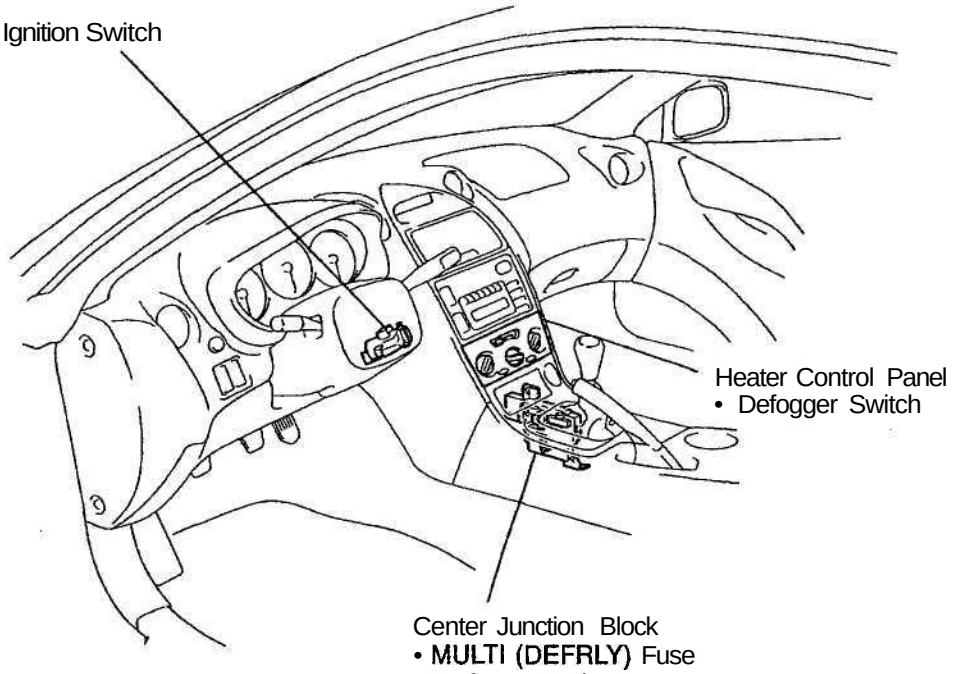

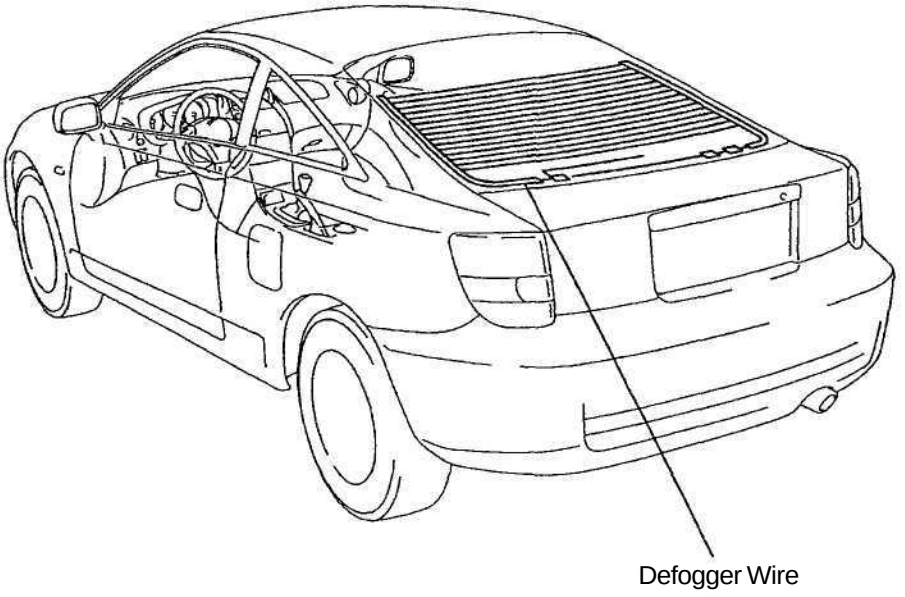

P

113602

BE1DS-01

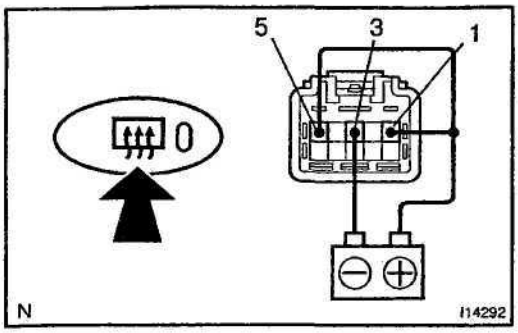

INSPECTION

1. INSPECT DEFOGGER TIMER OPERATION

(a) Connect the positive (+) lead from the battery to terminal 1 and negative (-) lead to terminal 3.

(b) Connect the positive (+) lead from the battery to terminal 5 through a 3.4 W test bulb.

(c) Turn the defogger switch ON and check that the indicator light and test bulb light up for 12 for 18 minutes, then the indicator light and test bulb lights go out.

If operation is not as specified, replace the switch.

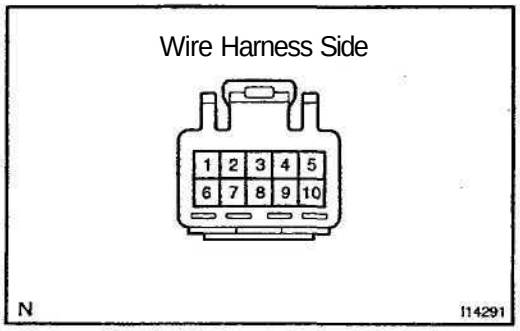

2. INSPECT DEFOGGER SWITCH CIRCUIT

Connector disconnected:

Disconnect the connector from the switch and inspect the connector on wire harness side, as shown in the chart.

Tester connection	Condition	Specified condition
3 - Ground	Constant	Continuity
5 - Ground	Ignition switch LOCK or ACC	No voltage
5 - Ground	Ignition switch ON	Battery positive voltage

If the circuit is not as specified, replace the switch.

3. INSPECT DEFOGGER SWITCH CIRCUIT

Connector connected:

Connect the connector from the switch and inspect the wire harness side connector from the back side, as shown in the chart.

Tester connection	Condition	Specified condition
5 - Ground	Ignition switch ON and defogger switch OFF	Battery positive voltage
5 - Ground	Ignition switch ON and defogger switch ON	No voltage

If the circuit is not as specified, try replacing the switch with a new one.

If the circuit is not as specified, inspect the circuit connected to other parts.

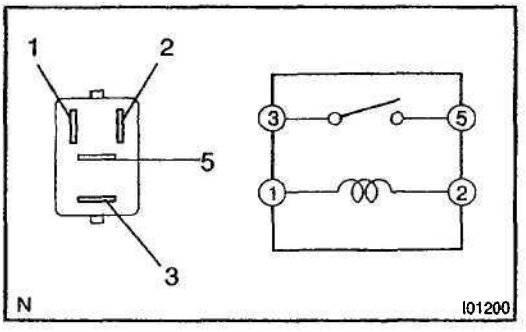

4. INSPECT DEFOGGER RELAY CONTINUITY

Condition	Tester connection	Specified condition
Constant	1-2	Continuity
Apply B+ between terminals 1 and 2.	3-5	Continuity

If continuity is not as specified, replace the relay.

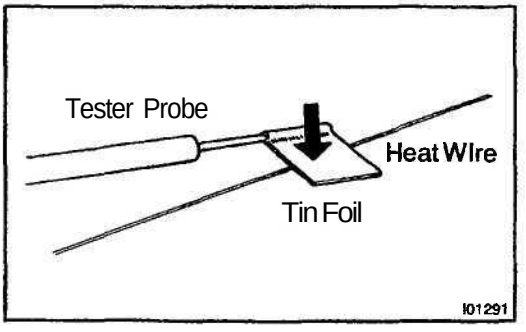

5. INSPECT DEFOGGER WIRE

NOTICE:

- **When cleaning the glass, use a soft, dry cloth, and wipe the glass in the direction of the wire. Take care not to damage the wires.**
- **Do not use detergents or glass cleaners with abrasive ingredients.**
- **When measuring voltage, wind a piece of tin foil around the top of the negative probe and press the foil against the wire with your finger, as shown.**

(a) Turn the ignition switch ON.

(b) Turn the defogger switch ON.

(c) Inspect the voltage at the center of each heat wire, as shown.

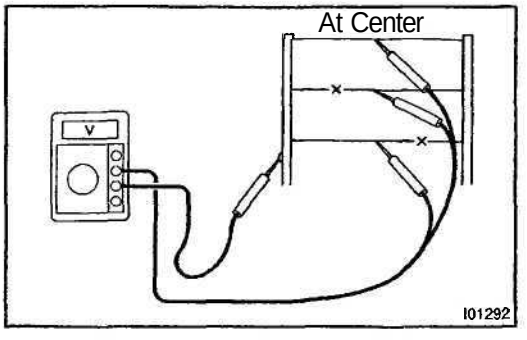

Voltage	Criteria
Approx. 5V	Okay (No break in wire)
Approx. 10V or 0V	Broken wire

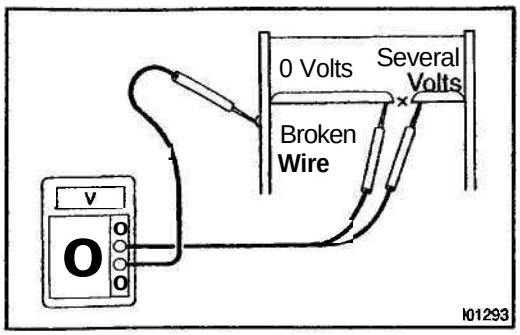

HINT:

If there is approximately 10 V, the wire is broken between the center of the wire and the positive (+) end. If there is no voltage, the wire is broken between the center of the wire and ground.

(d) Place the voltmeter positive (+) lead against the defogger positive (+) terminal.

(e) Place the voltmeter negative (-) lead with the foil strip against the heat wire at the positive (+) terminal end and slide it toward the negative (-) terminal end.

(f) The point where the voltmeter deflects from zero to several V is the place where the heat wire is broken.

HINT:

If the heat wire is not broken, the voltmeter indicates 0 V at the positive (+) end of the heat wire but gradually increases to about 12 V as the meter probe is moved to the other end.

POWER WINDOW CONTROL SYSTEM

LOCATION

BE0PF-02

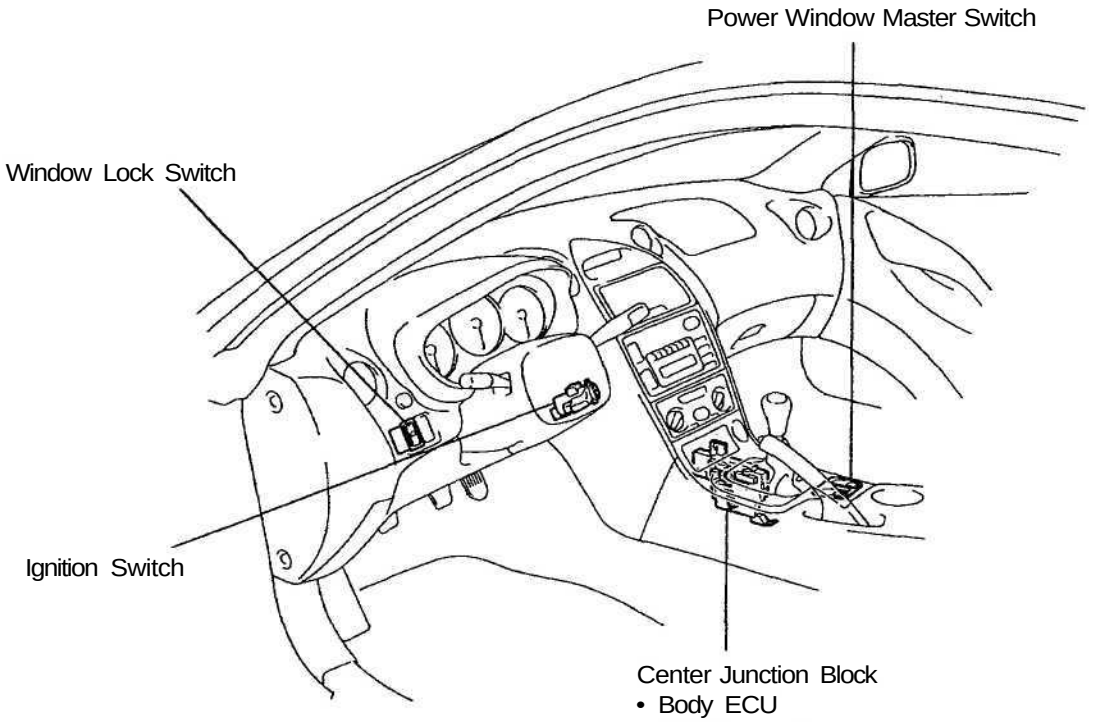

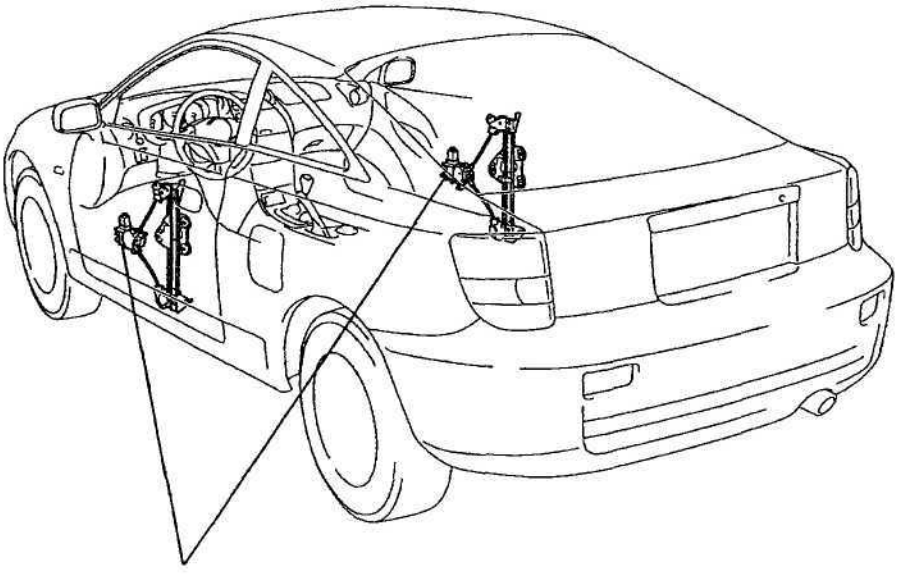

P

I13600

BE1D6-01

INSPECTION

1. INSPECT POWER WINDOW MASTER SWITCH CONTINUITY

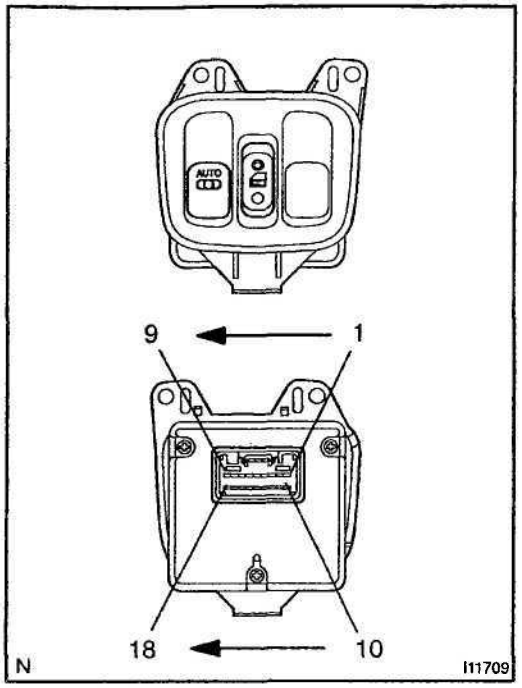

Driver's switch:

Switch position	Tester connection	Specified condition
UP	2-9, 17-18	Continuity
OFF	9-17, 17-18	Continuity
DOWN	2-18, 9-17	Continuity
DOWN AUTO	2-18, 9-17	Continuity

Passenger's switch (Window unlock):

Switch position	Tester connection	Specified condition
UP	1-11, 10-17	Continuity
OFF	1-17, 10-17	Continuity
DOWN	10 – 11, 1-17	Continuity

Passenger's switch (Window lock):

Switch position	Tester connection	Specified condition
UP	1 -11	Continuity
OFF	1-10	Continuity
DOWN	10-11	Continuity

If continuity is not as specified, replace the switch.

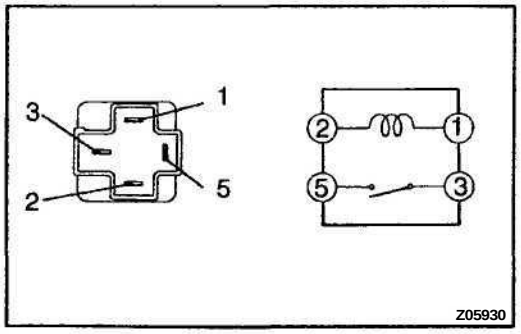

2. INSPECT POWER MAIN RELAY CONTINUITY

Condition	Tester connection	Specified condition
Constant	1-2	Continuity
Apply B+ between terminals 1 and 2.	3-5	Continuity

If continuity is not as specified, replace the relay.

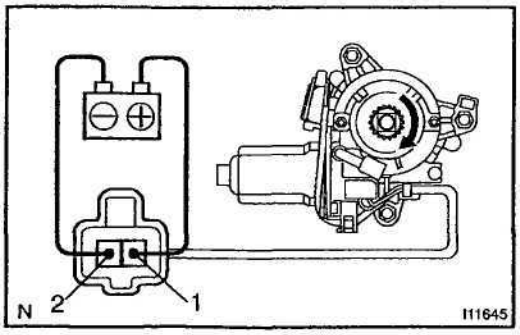

3. Driver's door:

INSPECT POWER WINDOW MOTOR OPERATION

(a) Connect the positive (+) lead from the battery to terminal 1 and the negative (-) lead to terminal 2, check that the motor turns clockwise.

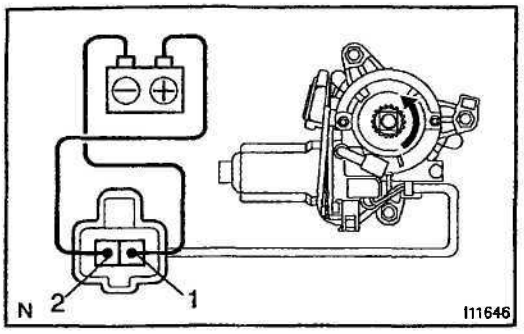

(b) Reverse the polarity, check that the motor turns counter-clockwise.

If operation is not as specified, replace the motor.

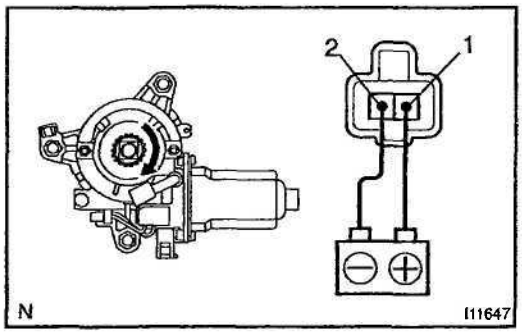

4. Passenger's door:

INSPECT POWER WINDOW MOTOR OPERATION

(a) Connect the positive (+) lead from the battery to terminal 1 and the negative (-) lead to terminal 2, check that the motor turns clockwise.

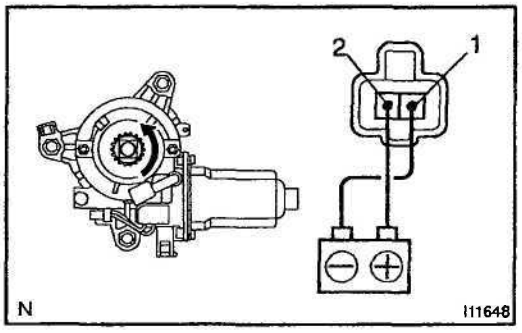

(b) Reverse the polarity, check that the motor turns counter-clockwise.

If operation is not as specified, replace the motor.

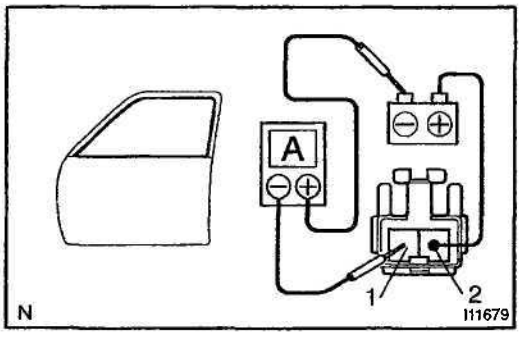

5. Driver's door:

INSPECT PTC OPERATION

(a) Disconnect the connector from the window motor.

(b) Connect the positive (+) lead from the ammeter to terminal 1 of the wire harness side connector and the negative (–) lead to negative terminal of the battery.

(c) Connect the positive (+) lead from the battery to terminal 2 of the wire harness side connector, and raise the window to the fully closed position.

(d) Continue to apply voltage, check that the current changes from approximately 14 A to less than 1 A within 4 to 90 seconds.

(e) Disconnect the leads from terminals.

(0 Approximately 90 seconds later, connect the positive (+) lead from the battery to terminal 1 and negative (-) lead to terminal 2, check that the window begins to descend.

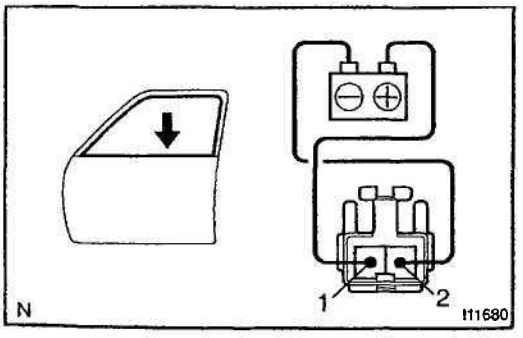

If operation is not as specified, replace the motor.

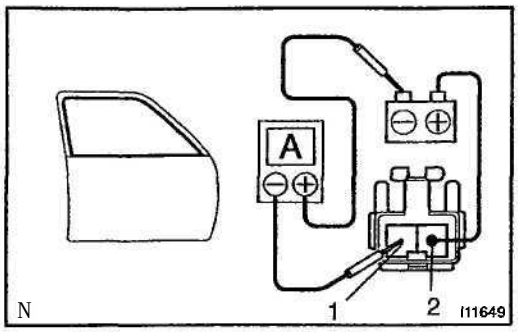

6. **Passenger's door:**
INSPECT PTC OPERATION

(a) Disconnect the connector from the power window switch.
(b) Connect the positive (+) lead from the ammeter to terminal 1 of the wire harness side connector and the negative (-) lead to negative terminal of the battery.
(c) Connect the positive (+) lead from the battery to terminal 2 of the wire harness side connector, and raise the window to the fully closed position.

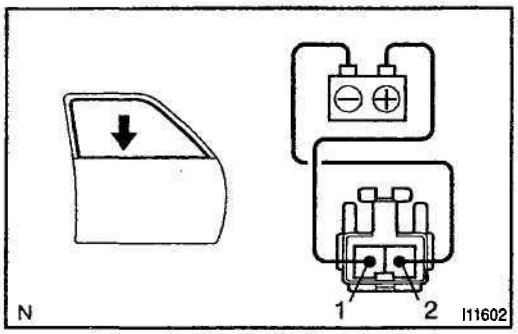

(d) Continue to apply voltage, check that the current changes from approximately 14 A to less than 1 A within 4 to 90 seconds.
(e) Disconnect the leads from terminals.
(f) Approximately 90 seconds later, connect the positive (+) lead from the battery to terminal 1 and the negative (-) lead to terminal 2, check that the window begins to descend.

If operation is not as specified, replace the motor.

POWER DOOR LOCK CONTROL SYSTEM

LOCATION

BE0PH-02

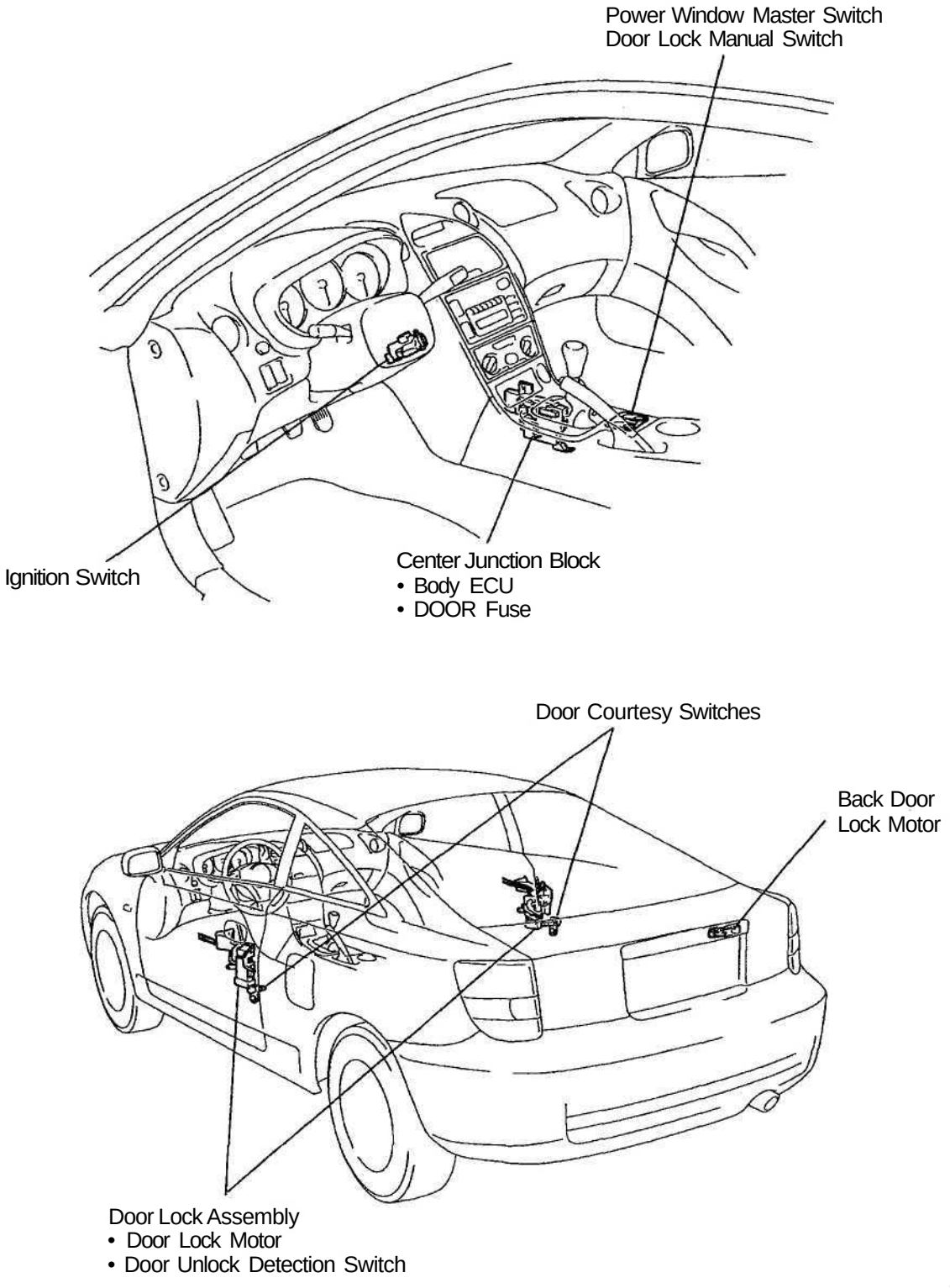

BE1D7-01

INSPECTION

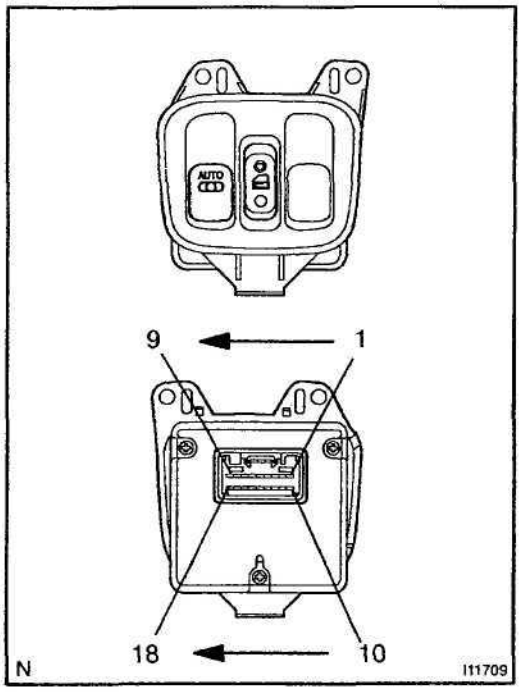

1. Master switch:

INSPECT DRIVER'S DOOR LOCK CONTROL SWITCH CONTINUITY

Switch position	Tester connection	Specified condition
LOCK	5-17	Continuity
OFF	–	No continuity
UNLOCK	6-17	Continuity

If continuity is not as specified, replace the switch.

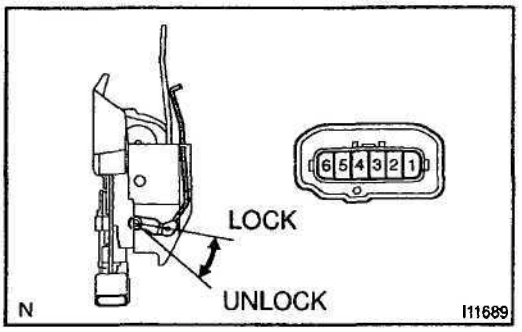

2. Driver's door:

INSPECT DOOR KEY LOCK AND UNLOCK SWITCH CONTINUITY

Switch position	Tester connection	Specified condition
LOCK	3-5	Continuity
OFF	–	No continuity
UNLOCK	3-6	Continuity

If continuity is not as specified, replace the switch.

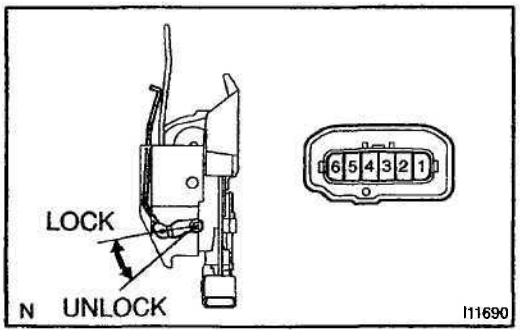

3. Passenger's door:

INSPECT DOOR KEY LOCK AND UNLOCK SWITCH CONTINUITY

Switch position	Tester connection	Specified condition
LOCK	2-4	Continuity
OFF	–	No continuity
UNLOCK	1-4	Continuity

If continuity is not as specified, replace the switch.

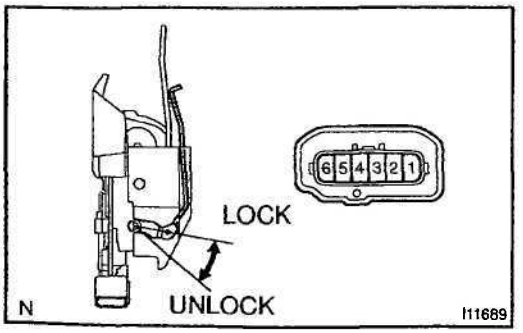

4. Driver's door:

INSPECT DOOR UNLOCK DETECTION SWITCH CONTINUITY

Switch position	Tester connection	Specified condition
OFF (Door Lock set to LOCK)	–	No continuity
ON (Door Lock set to UNLOCK)	3-4	Continuity

If continuity is not as specified, replace the switch.

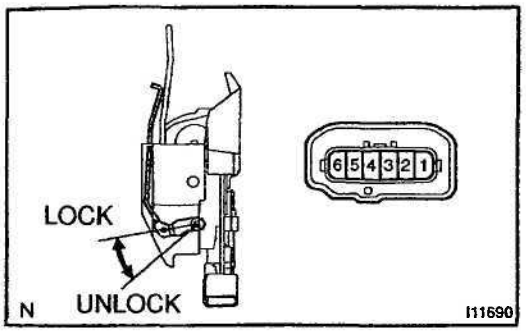

5. Passenger's door:
INSPECT DOOR UNLOCK DETECTION SWITCH CONTINUITY

Switch position	Tester connection	Specified condition
OFF (Door Lock set to LOCK)	–	No continuity
ON (Door Lock set to UNLOCK)	3 - 4	Continuity

If continuity is not as specified, replace the switch.

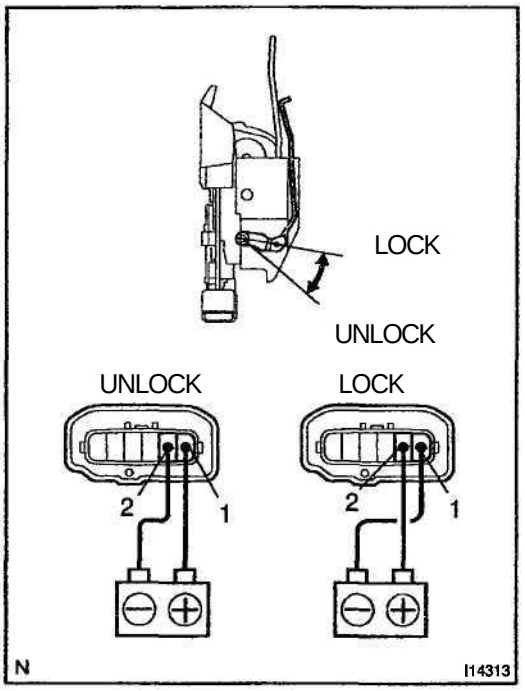

6. Driver's door:
INSPECT DOOR LOCK MOTOR OPERATION

(a) Connect the positive (+) lead from the battery to terminal 1 and the negative (-) lead to terminal 2, and check that the door lock link moves to UNLOCK position.

(b) Reverse the polarity and check that the door lock link moves to LOCK position.

If operation is not as specified, replace the door lock assembly.

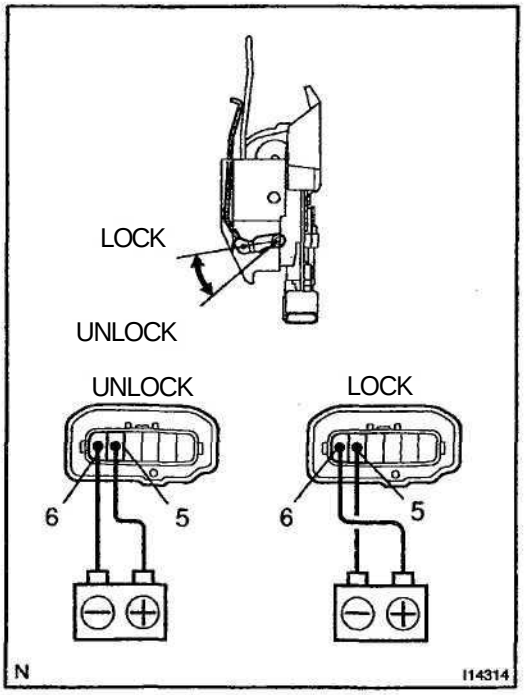

7. **Passenger's door:**
INSPECT DOOR LOCK MOTOR OPERATION

(a) Connect the positive (+) lead from the battery to terminal 5 and the negative (-) lead to terminal 6, and check that the door lock link moves to UNLOCK position.

(b) Reverse the polarity and check that the door lock link moves to LOCK position.

If operation is not as specified, replace the door lock assembly.

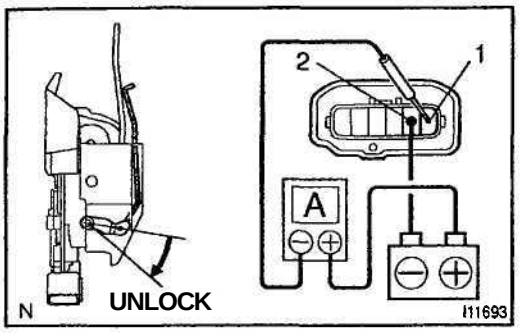

8. INSPECT DRIVER'S DOOR PTC THERMISTOR OPERATION

(a) Connect the negative (-) lead from the battery to terminal 2.

(b) Connect the positive (+) lead from the ammeter to terminal 1 and the negative (-) lead to battery negative (-) terminal, and check that the current changes from approximately 3.2 A to less than 0.5 A within 20 to 70 seconds.

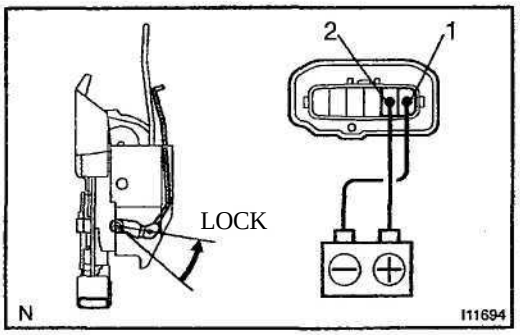

(c) Disconnect the leads from terminals.

(d) Approximately 60 seconds later, connect the positive (+) lead from the battery to terminal 2 and the negative (-) lead to terminal 1, and check that the door lock moves to the LOCK position.

If operation is not as specified, replace the door lock assembly.

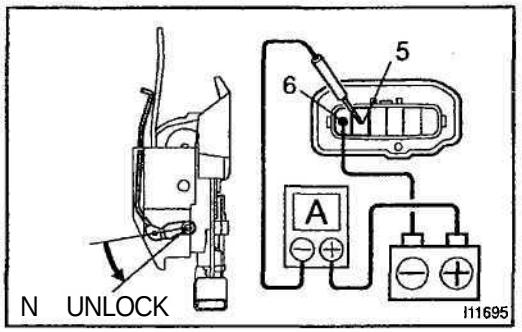

9. INSPECT PASSENGER'S DOOR PTC THERMISTOR OPERATION

(a) Connect the negative (-) lead from the battery to terminal 6.

(b) Connect the positive (+) lead from the ammeter to terminal 5 and the negative (-) lead to battery negative (-) terminal, and check that the current changes from approximately 3.2 A to less than 0.5 A within 20 to 70 seconds.

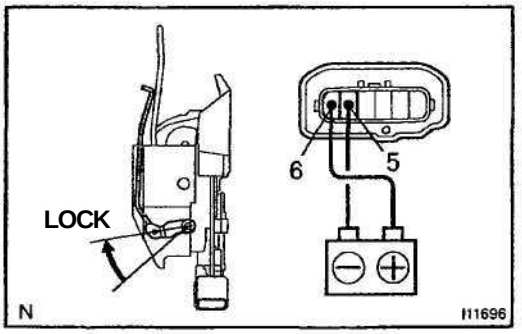

(c) Disconnect the leads from terminals.

(d) Approximately 60 seconds later, connect the positive (+) lead from the battery to terminal 6 and the negative (-) lead to terminal 5, and check that the door lock moves to the LOCK position.

If operation is not as specified, replace the door lock assembly.

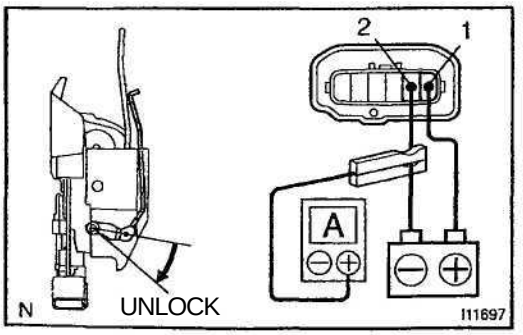

10. INSPECT DRIVER'S DOOR PTC THERMISTOR OPERATION

(a) Connect the positive (+) lead from the battery to terminal 1 and the negative (-) lead to terminal 2.

(b) Attach a current-measuring probe to either the positive (+) lead or the negative (-) lead, and check that the current changes from approximately 3.2 A to less than 0.5 A within 20 to 70 seconds.

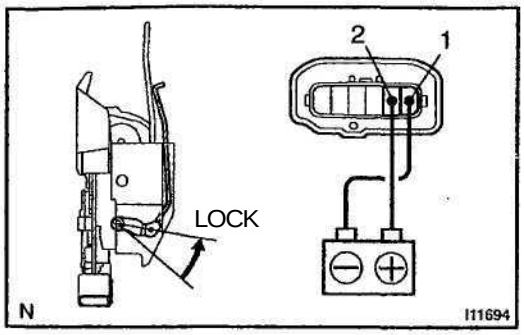

(c) Disconnect the leads from terminals.
(d) Approximately 60 seconds later, reverse the polarity, and check that the door lock moves to the LOCK position.

If operation is not as specified, replace the door lock assembly.

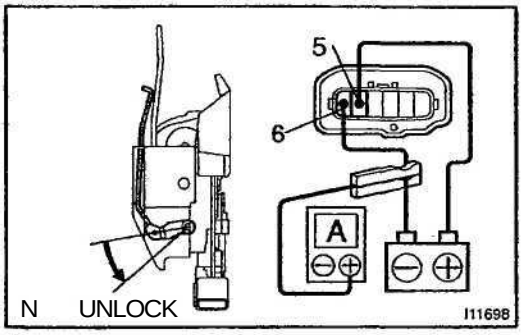

11. INSPECT PASSENGER'S DOOR PTC THERMISTOR OPERATION

(a) Connect the positive (+) lead from the battery to terminal 5 and the negative (-) lead to terminal 6.
(b) Attach a current-measuring probe to either the positive {+) lead or the negative (-) lead, and check that the current changes from approximately 3.2 A to less than 0.5 A within 20 to 70 seconds.

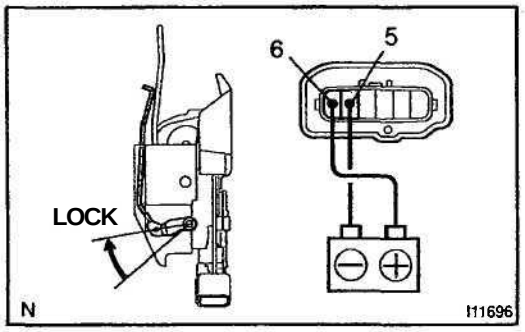

(c) Disconnect the leads from terminals.
(d) Approximately 60 seconds later, reverse the polarity, and check that the door lock moves to the LOCK position.

If operation is not as specified, replace the door lock assembly.

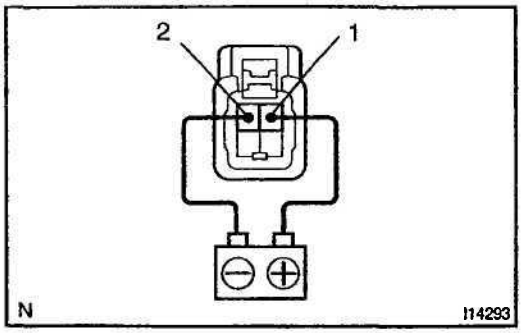

12. INSPECT BACK DOOR LOCK MOTOR OPERATION

Connect the positive (+) lead from the battery to terminal 1 and the negative (-) lead to terminal 2, and check that the door lock link moves to UNLOCK position.

If operation is not as specified, replace the door lock assembly.

WIRELESS DOOR LOCK CONTROL SYSTEM

LOCATION

BE1DS-01

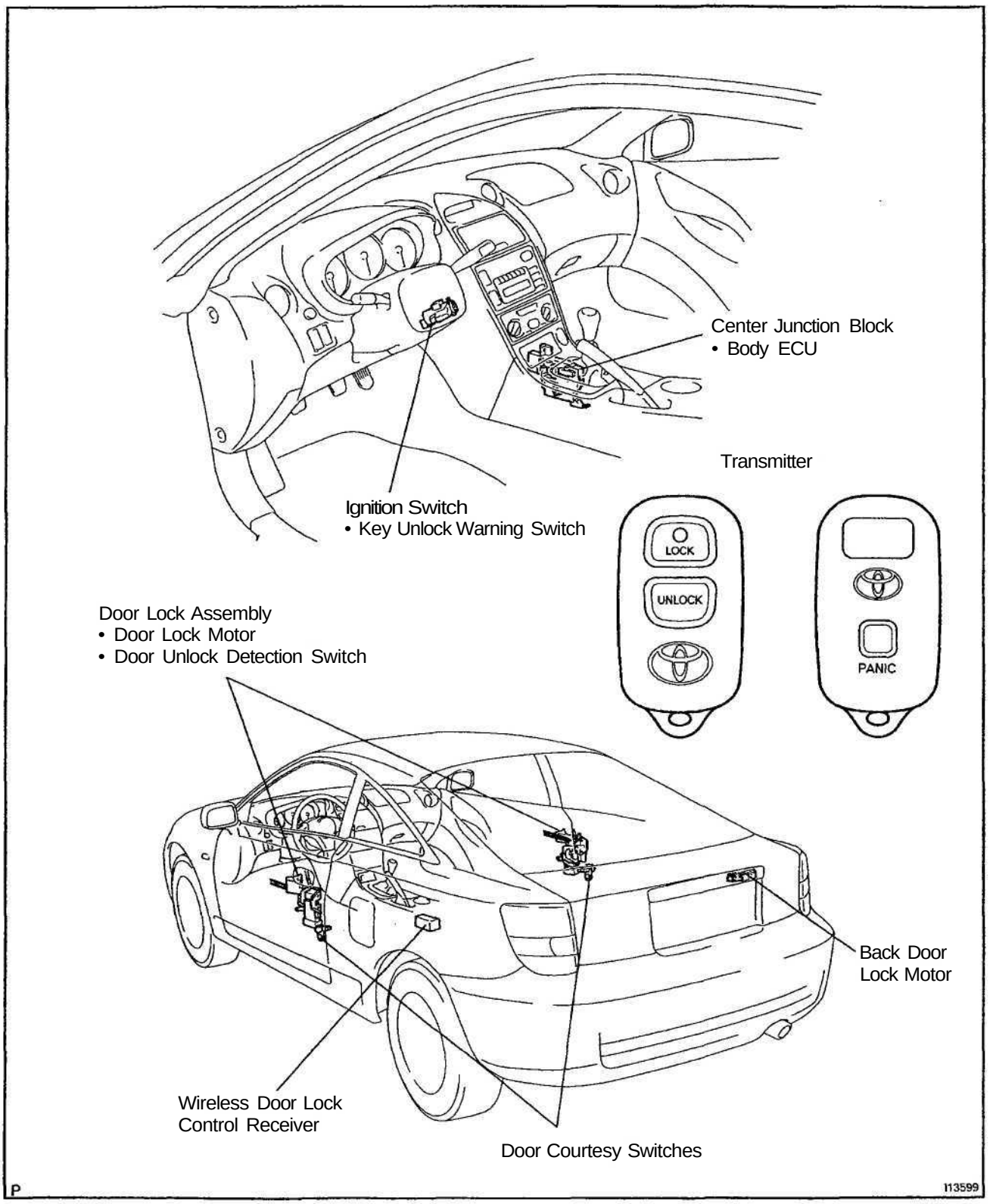

BE0QA-08

PRE-CHECK

Only wireless function (Remote control) will not operate.
(If a new transmitter or a transmitter of the same type that works properly with the vehicle is not available.)

Make the vehicle in the initialized condition:
The initialized condition is the condition when the following conditions are satisfied.
(1) Key plate has not been inserted in the ignition key cylinder.
(2) All the doors are closed. (Door warning light is off.)
(3) All the doors are locked.

Basic function check:

Under the standard operation, when repeating the operation of UNLOCK and LOCK switch 3 times or more alternately, check the UNLOCK-LOCK operation from 3rd time onward.
• Following procedures are standard operation.
(1) Keep about 1 M away to the right direction from the outside handle of a driver's seat.
(2) Face the transmitter toward the vehicle and press one of transmitter switches for about 1 sec.

Yes

Normal
<Reference>
• Operative distance may differ according to an operator, the way of holding the transmitter or position.
• Because weak electric wave is used, when there is strong wave or noise in the used frequency ,operation distance might be shortened.

No

Transmitter battery check:

Replace the transmitter battery with a new or normal one and check UNLOCK-LOCK function works under the standard operation.
<Reference>
• The battery should be replaced by only the shops with sufficient skill as new normal battery is necessary.
• Battery quality can be judged by checking the remnant volume of the battery.

Yes → Battery faulty.

No

Make the vehicle be in the initialized condition.

Inspection start by using self diagnostic mode:

Enter into the self diagnostic mode.
If operating door control receiver in the order of 1 through 2, the mode turns to diagnostic mode.
(1) Insert the key plate in the ignition key cylinder and pull out, then insert it again and turn ignition switch OFF → ON → OFF once within 5 seconds after pulling out.
(2) After completing the procedure within 30 seconds, turn the ignition switch OFF → ON → OFF 9 times.
HINT:
In the case that either of (1) and (2) conditions is not satisfied, transfer to normal mode.
<Reference>
When completing self diagnostic mode, turn the ignition switch ON.
LOCK and UNLOCK operation is not performed under the self diagnostic mode.

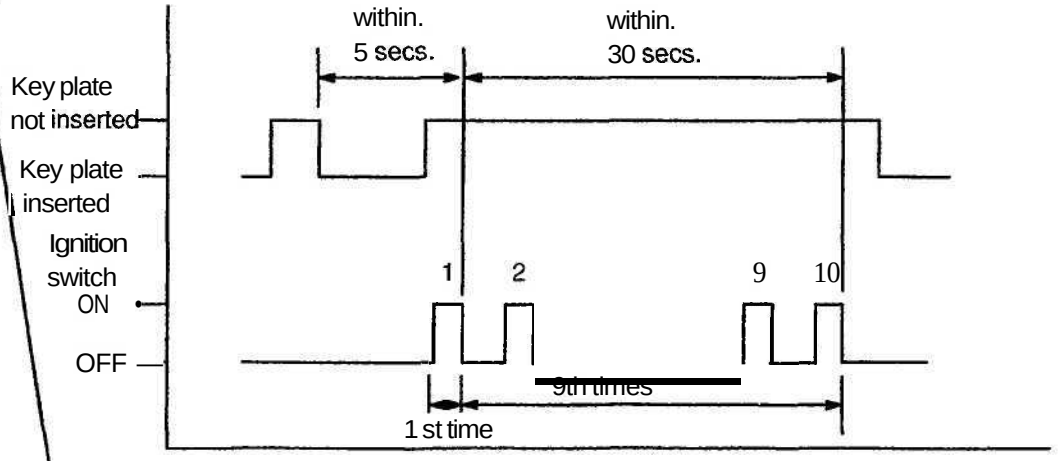

Diagnostic mode operation confirmation:
Check the taillight lights up soon after the input operation of self diagnostic mode.

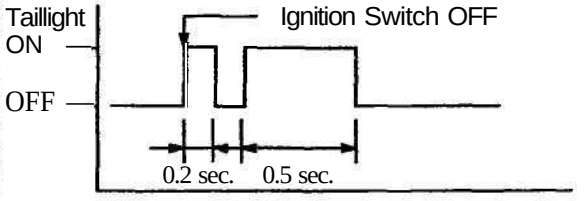

<Reference>
• Taillight light up should be maximum despite the controller.

No

Is the method to input the diagnostic mode correct?

(Not enter in diagnostic mode)

No

Yes

Is the function of operation confirmation taillight normal?

No

Yes

Taillight faulty.

Yes

Confirmation of diagnostic mode:
Check taillight light up when pressing on each switch of transmitter.

(1) Received normal wave of LOCK switch.

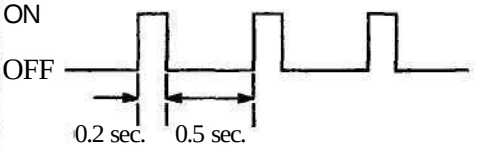

(2) Received normal wave of UNLOCK switch.

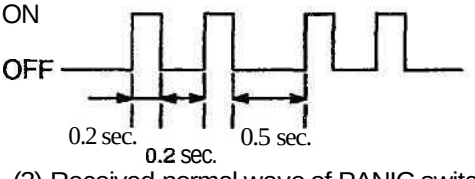

(3) Received normal wave of PANIC switch.

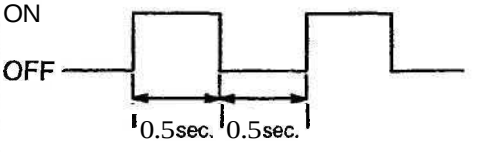

(4) Compatibility of the recognition code or out from synchronization of rolling code.*.

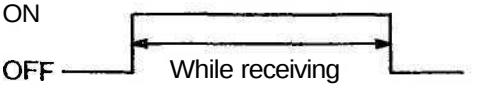

No response

Transmitter faulty or wireless door lock receiver faulty.
<Reference>
• Use another (normal) transmitter and check with the diagnostic mode and in the case that the check result shows the transmitter faulty, it can be judged that wireless door lock receiver is normal.

In case of taillight outputs from (1) – (3)

In case of taillight outputs of (4)

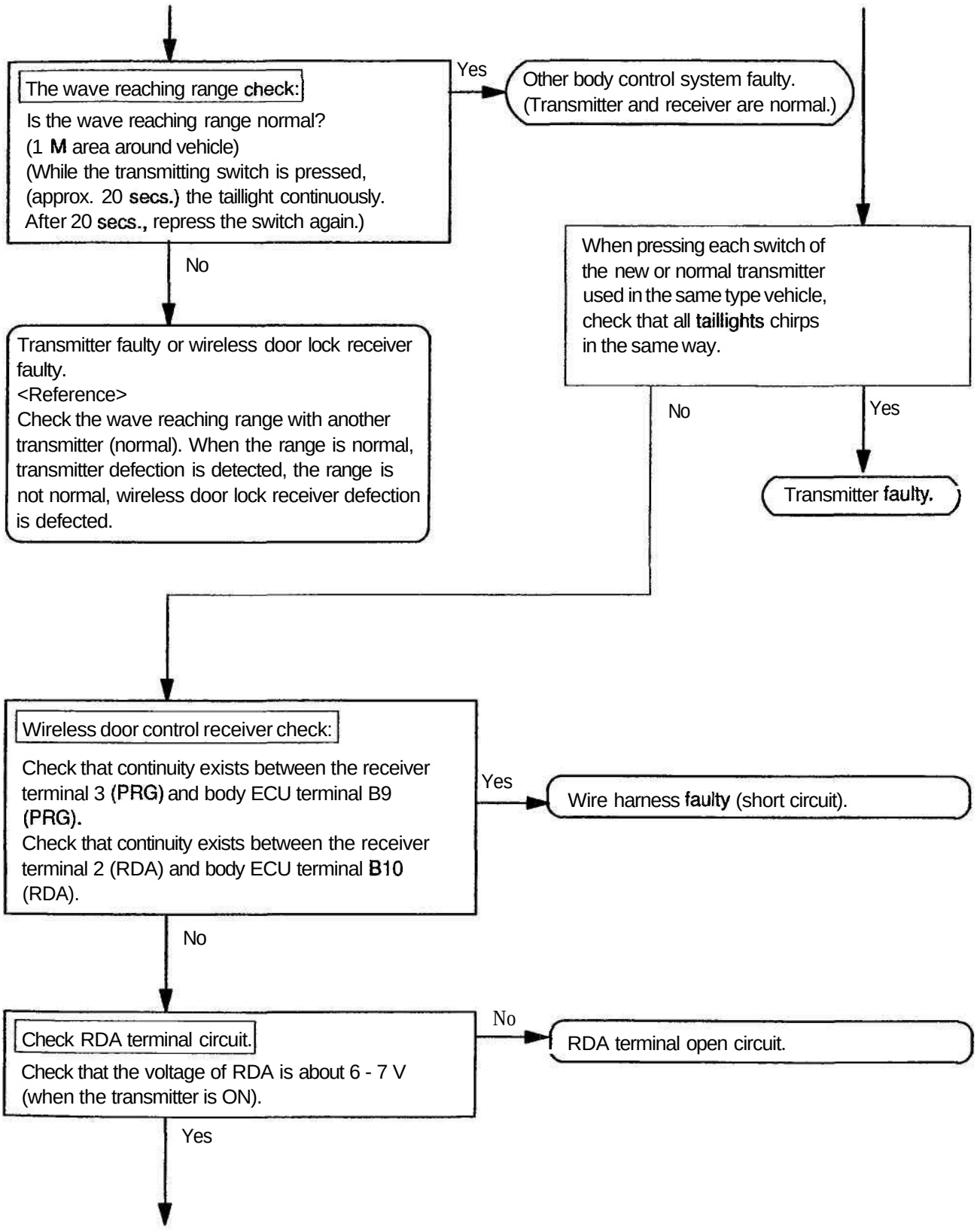
The wave reaching range check:
Is the wave reaching range normal?
(1 M area around vehicle)
(While the transmitting switch is pressed, (approx. 20 secs.) the taillight continuously. After 20 secs., repress the switch again.)
Yes
Other body control system faulty. (Transmitter and receiver are normal.)
No
Transmitter faulty or wireless door lock receiver faulty.
<Reference>
Check the wave reaching range with another transmitter (normal). When the range is normal, transmitter defection is detected, the range is not normal, wireless door lock receiver defection is defected.
When pressing each switch of the new or normal transmitter used in the same type vehicle, check that all taillights chirps in the same way.
No
Yes
Transmitter faulty.
Wireless door control receiver check:
Check that continuity exists between the receiver terminal 3 (PRG) and body ECU terminal B9 (PRG).
Check that continuity exists between the receiver terminal 2 (RDA) and body ECU terminal B10 (RDA).
Yes
Wire harness faulty (short circuit).
No
Check RDA terminal circuit.
Check that the voltage of RDA is about 6 - 7 V (when the transmitter is ON).
No
RDA terminal open circuit.
Yes

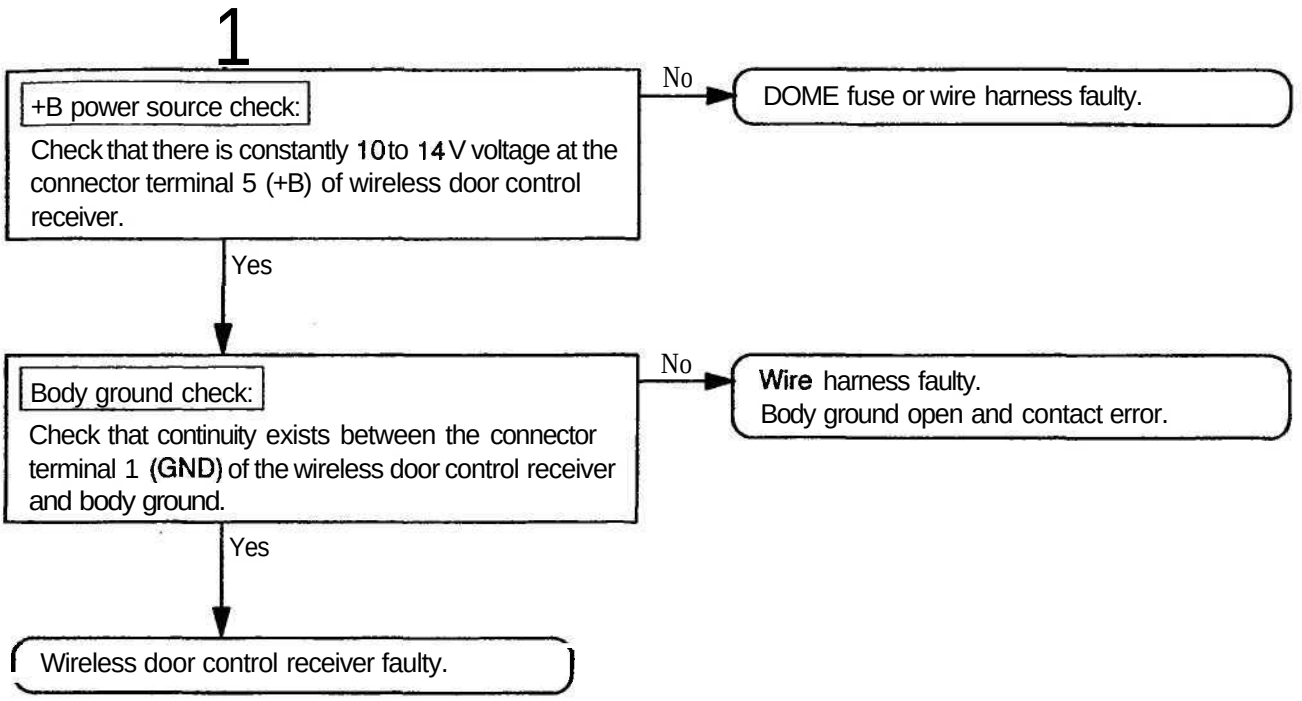
1
+B power source check:
Check that there is constantly 10 to 14 V voltage at the connector terminal 5 (+B) of wireless door control receiver.
No
DOME fuse or wire harness faulty.
Yes
Body ground check:
Check that continuity exists between the connector terminal 1 (GND) of the wireless door control receiver and body ground.
No
Wire harness faulty.
Body ground open and contact error.
Yes
Wireless door control receiver faulty.

INSPECTION

1. INSPECT WIRELESS DOOR LOCK TRANSMITTER OPERATION

HINT:

Refer to "Wireless door lock control receiver and transmitter replacement" on page BE–77.

(a) Using a screwdriver, remove the screw and cover.

(b) Remove the battery (lithium battery).

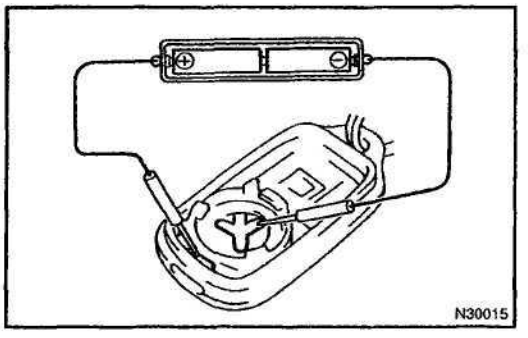

(c) Install a new or normal battery (lithium battery).

HINT:

When a new or normal battery can not be obtained, connect 2 new 1.5 V batteries in series, connect the battery (+) to the battery receptacle side terminal and battery (–) to the bottom terminal, then apply 3 V voltage to the transmitter.

(d) In the location where is approx. 1 M away from driver's outside handle in the right direction, and check the transmitter operation when pressing transmission switch on the surface of the transmitter body.

Standard:

Remote control of vehicle door lock can be operated.

HINT:

- The minimum operation distance differs according to operator, the way of holding, and location.
- As weak wave is used, operation distance might be shortened when noise is detected in strong wave or used frequency.

(e) Install the battery (lithium battery).

(f) Install a cover so that O–ring is not distorted or slipped off.

(g) Using a screwdriver, tighten the screw.

2. CHECK BATTERY CAPACITY

HINT:

- Make sure to use the TOYOTA electrical tester.
- With the battery unloaded, judge can not be made whether the battery is available or not on the test.
- When the transmitter is faulty, the energy amount left in the battery might not be checked correctly.
- On the lithium battery used for the transmitter, the voltage more than 2.5 V with the battery unloaded is shown on the tester until the energy is completely consumed. Accordingly when inspecting the energy amount left in the battery, it is necessary to measure the voltage when the battery is loaded. (1.2 kΩ).

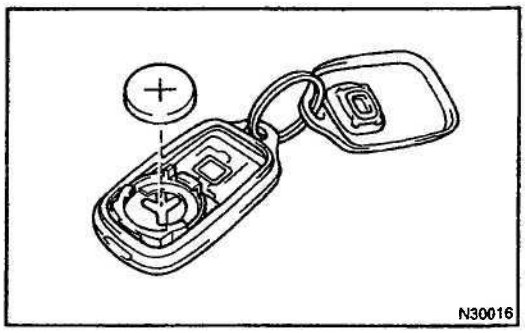

(a) Remove the screw and cover using a (-) driver.
(b) Remove the battery (lithium battery) from the transmitter.
(c) Connect the lead to the (-) terminal of the transmitter and install the battery.

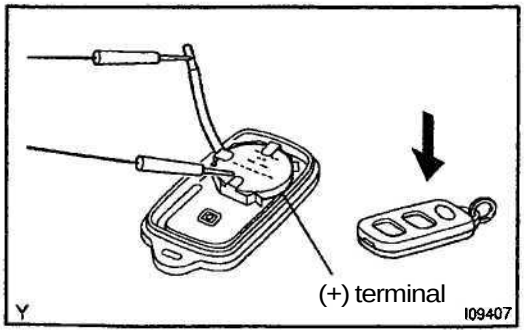

(d) Connect the (+) tester to the (+) battery (lithium battery), and (-) tester to the lead respectively.
(e) Press one of the transmitting switches on the transmitter for approx. 1 second.
(f) Press the transmitting switch on the transmitter again to check the voltage.

Standard: 2.1 V or more

HINT:

- When the temperature of the battery is low, the judge can not be made correctly.
  When the outcome of the test is less than 2.1 V, conduct the test again after leaving the battery in the place at 18 °C for more than 30 minutes.
- By auto power off function, the voltage becomes no load voltage (more than 2.5 V) condition after 20 seconds from the switch was pressed.
  Make sure to read the voltage before of it.
- High voltage might be shown 1 to 2 times after leaving the battery, judge should be made with the voltage shown at the 3rd time or later.

(g) Disconnect the lead.
(h) Set the battery (lithium battery) in the transmitter.
(i) Install the cover, so that the O–ring is not distorted or slipped off.
(j) Using a screwdriver, tighten the screw.

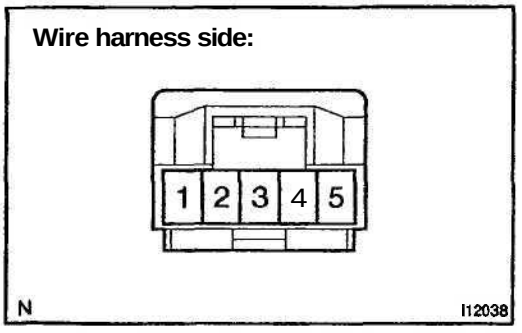

3. INSPECT WIRELESS DOOR LOCK CONTROL RECEIVER CIRCUIT

(a) Disconnect the connector from the receiver and inspect the connector on the wire harness side, as shown below.

Tester connection	Condition	Specified condition
1 - Ground	Constant	Continuity
5 - Ground	Constant	Battery voltage

If the circuit is not as specified, inspect the circuit connected to other parts.

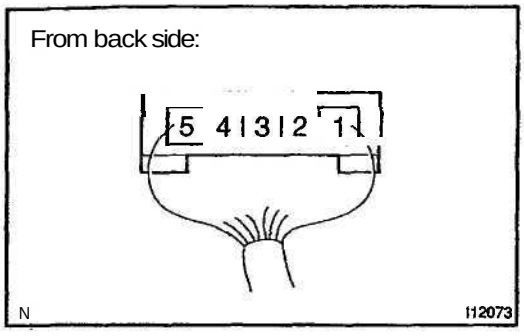

(b) Connect the wire harness side connector to the receiver and inspect the wire harness side connector from the back side, as shown below.

Tester connection	Condition	Specified condition
3 – Ground	Normal mode	10-14V
2 - Ground	Ignition switch position OFF Key removed Transmitter ON	About 6 – 7 V

If circuit is as specified, replace the receiver.
If the circuit is not as specified, inspect the circuit connected to other parts.

BE1D9-01

REPLACEMENT

1. REPLACE TRANSMITTER (LITHIUM) BATTERY

NOTICE:

Special caution should be taken for handling each component as they are precision electronic components.

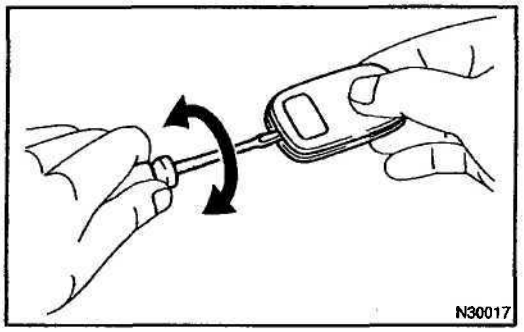

(a) Using a screwdriver, remove the cover.

NOTICE:

Do not pry out the cover forcibly.

HINT:

Push the cover with a finger as shown in the illustration, so that there becomes clearance, then pry out the cover from that clearance.

(b) Remove the transmitter.

(c) Remove the battery (lithium battery).

NOTICE:

- **Do not push the terminals with a finger.**
- **If prying up the battery (lithium battery) forcibly to remove, the terminals are deformed.**

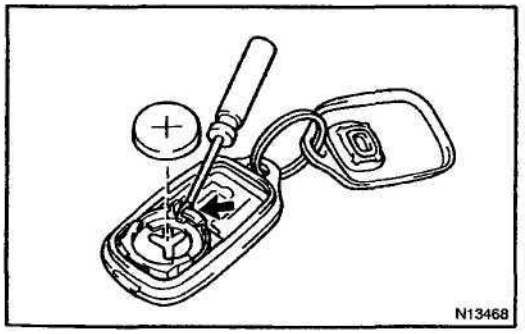

(d) Install a battery (lithium battery) as shown in the illustration.

NOTICE:

Face the battery upward. Take care not to deform the terminals.

(e) Assemble the transmitter to the key plate and the cover.

2. REPLACE DOOR CONTROL RECEIVER AND TRANSMITTER

NOTICE:

When replacing the door control receiver and transmitter, registration of recognition code is necessary because they are provided as single components.

(a) Select which operation mode should be performed from the following modes.

- Add mode
- Rewrite mode
- Prohibition mode
- Confirmation mode

HINT:

- The add mode is used to retain codes already registered while you register new recognition codes. This mode is used when adding a transmitter. However, if the number of registered codes exceeds 4 codes, previously registered codes are correspondingly erased in order, starting from the first registered code.
- The rewrite mode is used to erase all previously registered codes and register only new recognition codes.
- The prohibition mode is used to erase all registered codes and cancels the wireless door lock function. Use this mode when the transmitter is lost.
- The confirmation mode is for confirming how many recognition codes are already registered before you register additional recognition codes.

(b) Follow the chart on the following pages to register the transmitter recognition code at the wireless door lock control receiver.

HINT:

- When procedure is out of the specified, the operation returns to normal operation.
- Maximum 4 recognition codes can be registered.

Start registration of recognition code

1

The vehicle should be in the following conditions.
- The key is not inserted in the ignition key cylinder.
- Driver's door is OPEN. (Other doors are CLOSED)
- Driver's door is UNLOCKED.

Insert the key into the ignition key cylinder, then pull it out. (Rerform this twice within 5 seconds)

Within 40 secs.

Open and close the door (manual operation) 2 times.

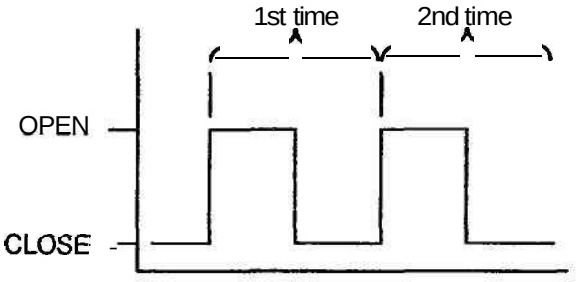

Insert the key into the ignition key cylinder, then pull it out.

Within 40 secs.

Again open and close the door (manual operation) 2 times.

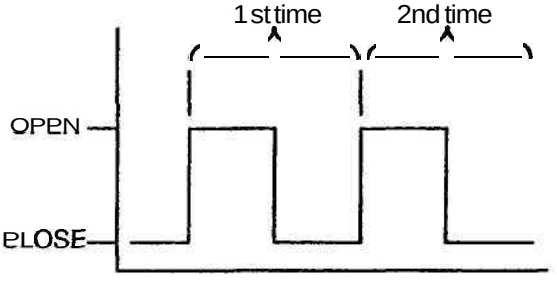

Close the all door and insert the key into the ignition key cylinder.

J

Turn the ignition switch from ON to LOCK at approx. 1 sec. interval 1 to 5 times to select the mode.

Add mode

ON - LOCK change occurs 1 time

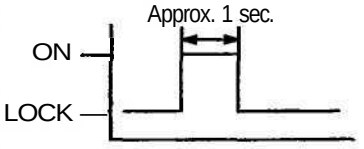

Confirmation mode

ON - LOCK change occurs 3 times

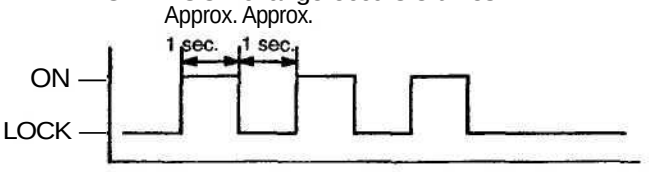

Rewrite mode

ON - LOCK change occurs 2 times

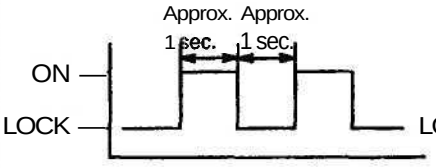

Prohibition mode

ON - LOCK change occurs 5 times

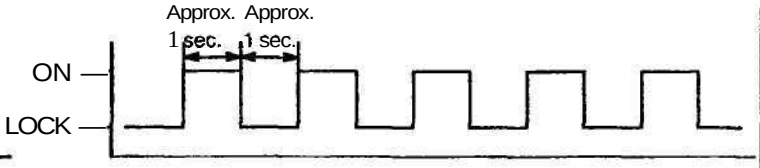

Pull out the key from the ignition key cylinder.

When add mode or rewrite mode is selected.

When prohibition mode is selected.

When confirmation mode is selected.

Within 3 secs.

Door control relay automatically performs the LOCK-UNLOCK operation once or twice at 1 sec. interval to inform the operator that either the add mode or rewrite mode has been selected.

LOCK–UNLOCK occurs once

Indicates that add mode has been selected.

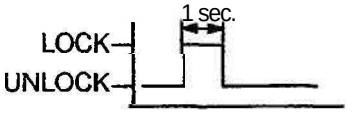

LOCK-UNLOCK occurs twice

Indicates that rewrite mode has been selected.

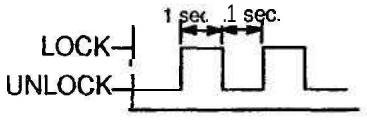

Door control relay automatically performs the LOCK–UNLOCK operation 1 to 4 times at 2 sec. interval to inform the operator of the number of the registered codes.

HINT:

When the number of the registered code is 0, the operation is automatically performed 5 times.

Example:

When the operation is performed twice, it directs that 2 types of recognition code have been registered.

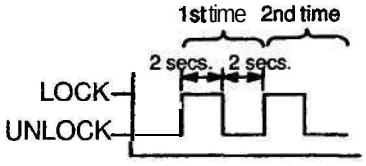

Registration of recognition code (Confirmation mode and prohibition mode) is completed.

When prohibition mode is selected.

Within 40 secs.

Door control relay performs LOCK-UNLOCK operation 5 times at a 1 sec. interval to inform the operator that prohibition mode has been selected.

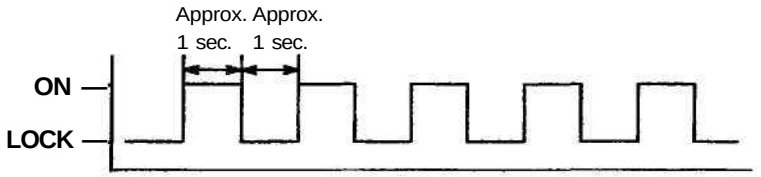

Press the lock and unlock switches on the transmitter switch simultaneously for more than between 1 sec. or more and 1.5 sec. below.

Within 3 secs.

Press either one of 2 switches on the transmitter.

Within 3 secs.

Door control relay automatically performs LOCK-UNLOCK operation once or twice at a 1 sec. interval to inform the operator that the receiver has received the signal from the transmitter.

LOCK–UNLOCK occurs once

Registration of recognition code is completed

LOCK-UNLOCK occurs twice

Registration of recognition code has not been completed.

- Recognition code received first time and second time did not match.
- When selecting add mode, a registered recognition code was received.

If LOCK–UNLOCK operation can not be performed at all, the mode returns to the normal mode, then start with "Start registration of recognition code".

Proceed to finish registration

Proceed to continue registration

Within 40 secs.

If even one of the following conditions is satisfied, registration of recognition codes is completed.

- 40 secs. elapses since the door control relay response.
- The driver's door is opened.
- The key plate is inserted in the ignition key cylinder.
- 4 type recognition codes are registration at one time.

Registration of recognition codes (add mode or rewrite mode) is completed.

SLIDING ROOF SYSTEM

TROUBLESHOOTING

BE0009-05

Sliding roof cannot be closed and neverses in error for some reason.

1. Operate the corresponding switch continuously for 10 sec, or more from the starting point of the reverse motion.
2. This shifts it to the manual operatiion in which the jam protection system is prohibited. (with the ignition ON)
3. In the manual operation, close the sliding roof completely and stop the motion.
4. The fully closed position will be detected by ECU.(Initialization).

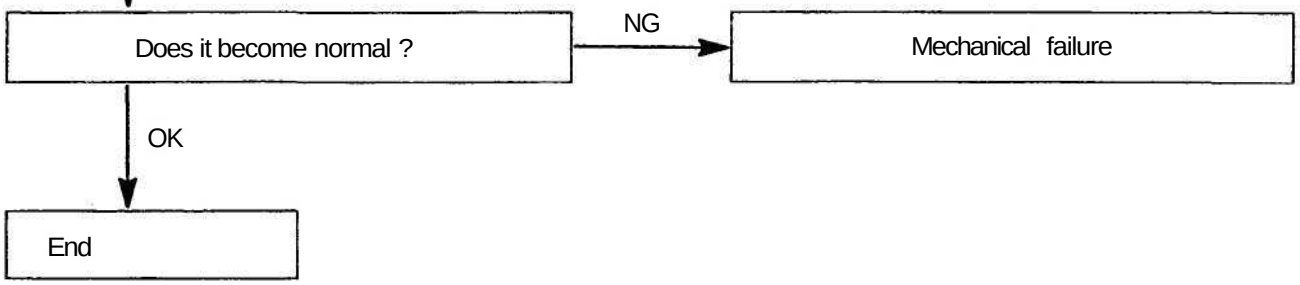

BE0PJ-02

LOCATION

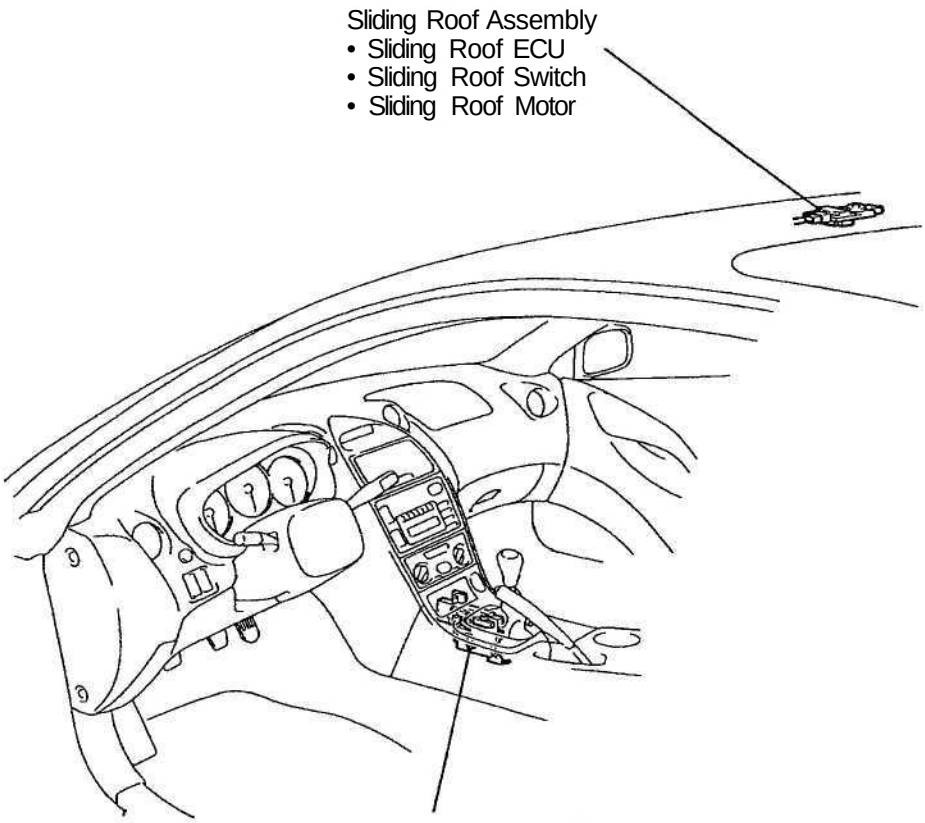

P

I13593

BE1DA-01

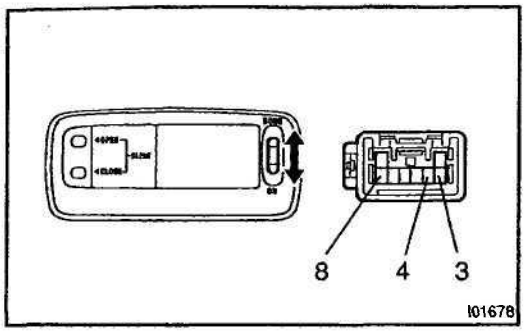

INSPECTION

1. INSPECT SLIDING ROOF SWITCH CONTINUITY

Switch position	Tester connection	Specified condition
OPEN	3-8	Continuity
OFF	–	No continuity
CLOSE	4-8	Continuity

If continuity is not as specified, replace the switch.

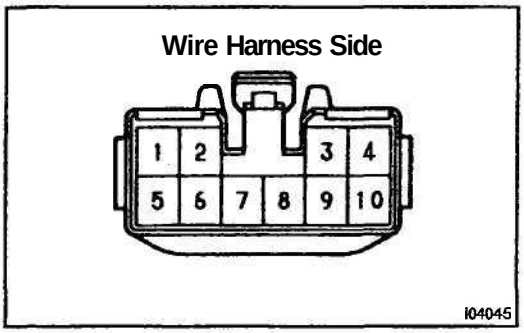

2. INSPECT SLIDING ROOF CONTROL ASSEMBLY CIRCUIT

Disconnect the connector from the ECU and inspect the connector on the wire harness side, as shown in the chart.

Tester connection	Condition	Specified condition
1 - Ground	Constant	Continuity
2 - Ground	Ignition switch LOCK or ACC	No voltage*
2 - Ground	Ignition switch ON	Battery positive voltage
5 - Ground	Constant	Battery positive voltage
7 - Ground	Constant	Continuity
6 - Ground	Constant	No continuity
8 – Ground	Ignition switch LOCK or ACC	No voltage
8 - Ground	Ignition switch ON	Battery positive voltage
9 - Ground	Sliding roof control switch CLOSE/DOWN	No continuity
9 - Ground	Sliding roof control switch OPEN/UP	Continuity
10 – Ground	Sliding roof control switch OPEN/UP	No continuity
10 – Ground	Sliding roof control switch CLOSE/DOWN	Continuity

*: Exceptions: During 43 second period after ignition switch ON → OFF (ACC) or until driver of passenger door in opened after ignition switch ON → OFF (ACC).

If circuit is as specified, replace the assembly.

POWER MIRROR CONTROL SYSTEM

LOCATION

BEOPL-02

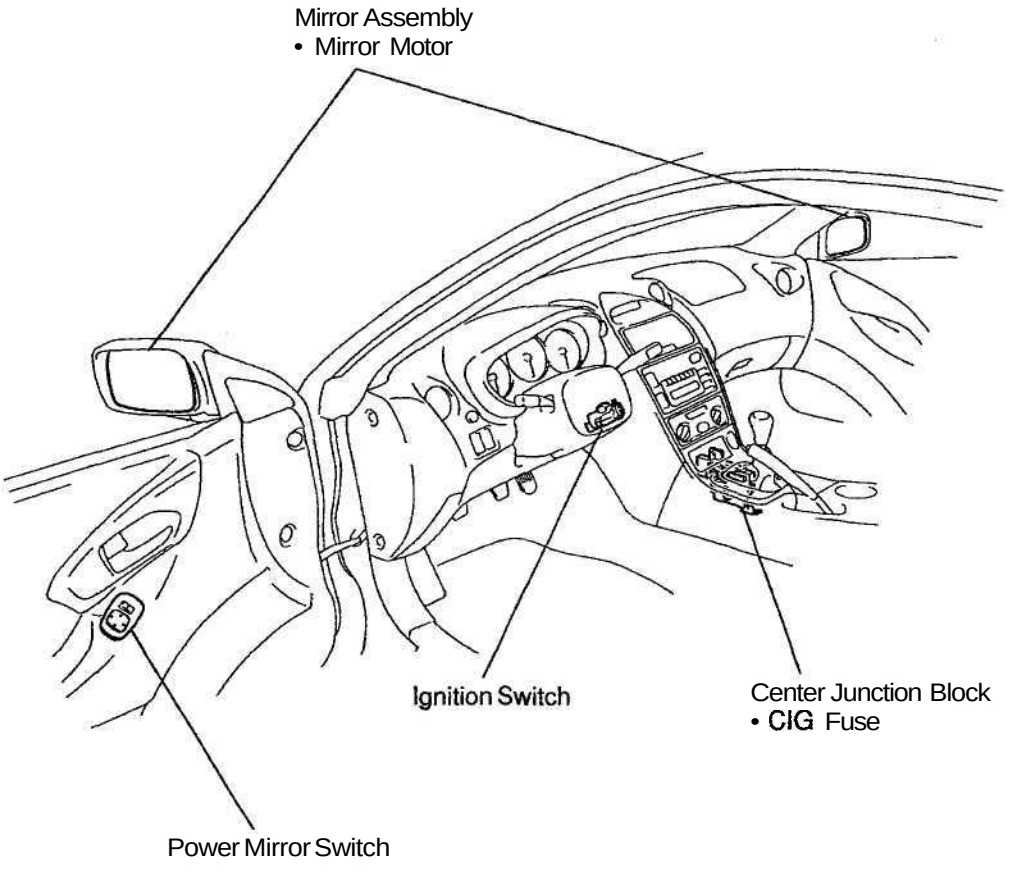

P

I13599

BE1DB-01

INSPECTION

1. INSPECT LEFT SIDE MIRROR SWITCH CONTINUITY

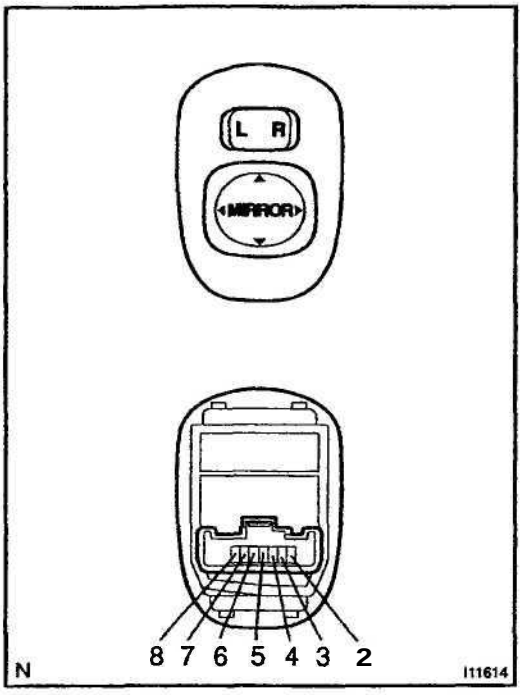

Switch position	Tester connection	Specified condition
OFF	–	No continuity
UP	4-8 6-7	Continuity
DOWN	4-7 6-8	Continuity
LEFT	5-8 6-7	Continuity
RIGHT	5-7 6-8	Continuity

2. INSPECT RIGHT SIDE MIRROR SWITCH CONTINUITY

Switch position	Tester connection	Specified condition
OFF	–	No continuity
UP	3-8 6-7	Continuity
DOWN	3-7 6-8	Continuity
LEFT	2-8 6-7	Continuity
RIGHT	2-7 6-8	Continuity

If continuity is not as specified, replace the switch.
If continuity is as specified, inspect the switch circuit.

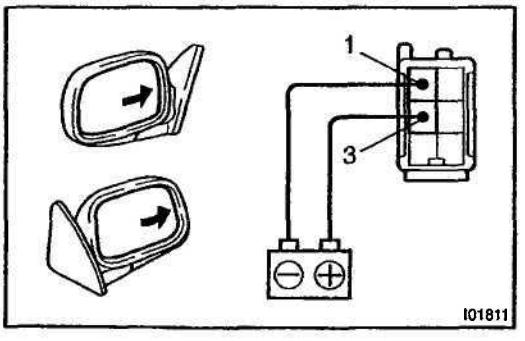

3. INSPECT MIRROR MOTOR OPERATION

(a) Connect the positive (+) lead from the battery to terminal 3 and the negative (-) lead to terminal 1, and check that the mirror turns right side.

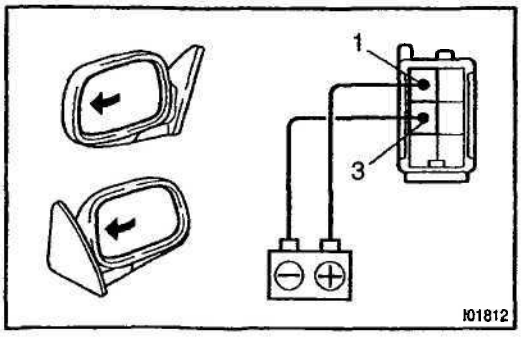

(b) Reverse the polarity, and check that the mirror turns left side.

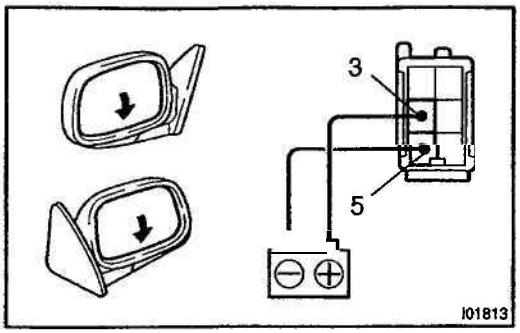

(c) Connect the positive (+) lead from the battery to terminal 3 and the negative (-) lead to terminal 5, and check that the mirror turns to the downward.

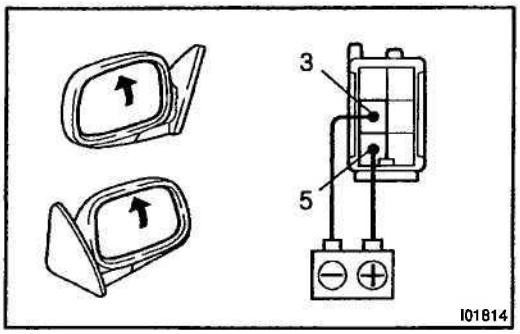

(d) Reverse the polarity, and check that the mirror turns to the upward.

If operation is not as specified, replace the mirror assembly.

AUDIO SYSTEM

DESCRIPTION

BE1DC-01

1. RADIO WAVE BAND

The radio wave bands used in radio broadcasting are as follows:

Frequency	30 kHz	300 kHz	3 MHz	30 MHz	300 MHz
Designation	LF	MF	HF	VHF	
Radio wave		AM ⟷		FM ⟷	
Modulation method	Amplitude modulation			Frequency modulation	

LF: Low frequency MF: Medium Frequency HF: High Frequency VHF: Very High Frequency

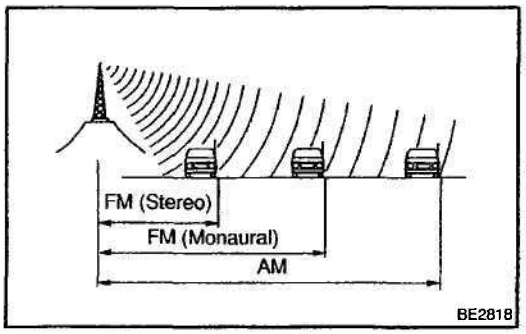

2. SERVICE AREA

There are great differences in the size of the service area for AM and FM monaural. Sometimes FM stereo broadcasts cannot be received even through AM comes in very clearly.
Not only does FM stereo have the smallest service area, but it also picks up static and other types of interference ("noise") easily.

3. RECEPTION PROBLEMS

Besides the problem of static, there are also the problems called "fading", "multipath" and "fade out". These problems are caused not by electrical noise but by the nature of the radio waves themselves.

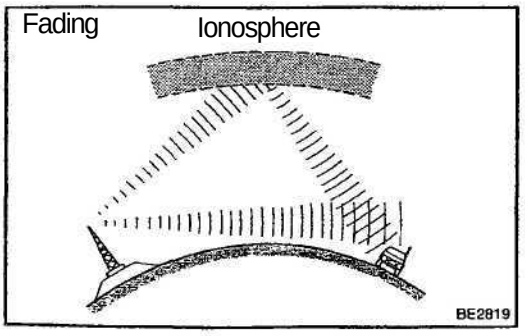

- Fading

  Besides electrical interference, AM broadcasts are also susceptible to other types of interference, especially at night. This is because AM radio waves bounce off the ionosphere at night. These radio waves then interfere with the signals from the same transmitter that reach the vehicle's antenna directly. This type of interference is called "fading".

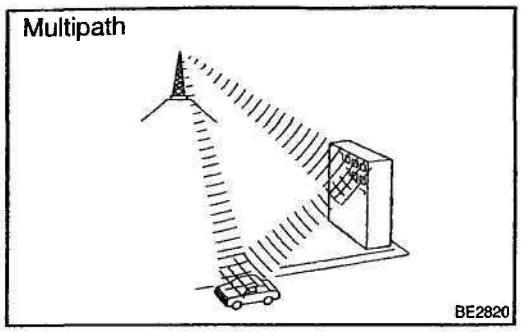

- Multipath
  One type of interference caused by bouncing of radio waves off obstructions is called "multipath". Multipath occurs when a signal from the broadcast transmitter antenna bounces off buildings and mountains and interferes with the signal that is received directly.

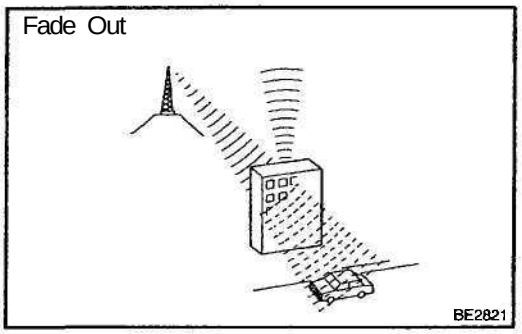

- Fade Out
  Because FM radio waves are of higher frequencies than AM radio waves, they bounce off buildings, mountains, and other obstructions. For this reason, FM signals often seem to gradually disappear or fade away as the vehicle goes behind a building or other obstructions. This is called "fade out".

4. **NOISE PROBLEMS**

(a) Questionnaire for noise:
It is very important for noise troubleshooting to have good understanding of the claims from the customers, so that make the best use of following quenstionnaire and diagnose the problem accurately.

AM	Noise occurs at a specific place.	Strong possibility of foreign noise.
	Noise occurs when listening to faint broadcasting.	There is a case that the same program is broadcasted from each local station and that may be the case you are listening to different station if the program is the same.
	Noise occurs only at night.	Strong possibility of the beat from a distant broadcasting.
FM	Noise occurs while driving and at a specific place.	Strong possibility of multipath noise and fading noise caused by the changes of FM waves.

HINT:
In the case that the noise occurrence condition does not meet any of the above quenstionnaire, check based on the Trouble Phenomenon".
Refer to previous page for multipath and fading.

(b) Matlers that require attention when checking:

- Noise coming into the radio usually has no harm for practical use as the noise protection is taken and it is hardly thinkable for an extremely loud noise to come in. When extremely loud noise comes into the radio, check if the grounding is normal where the antenna is installed.
- Check if all the regular noise prevention parts are properly installed and if there is any installation of non–authorized parts and non-authorized wiring.
- If you leave the radio out of tune (not tuning), it is easy to diagnose the phenomenon as noise occurs frequently.

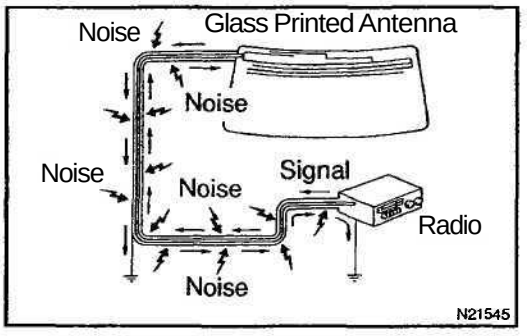

(c) Antenna and noise:

Electronic signal received by the antenna will reach to the radio transmitting through the core wire of the coaxial cable. Any noise wave other than radio wave is mixed into this core wire, that naturally causes noise in the radio and poor sound quality. In order to prevent these noises from mixing into the radio, the core wire inside the coaxial cable is covered with a mesh wire called shield wire. This shield wire shelters the noise and transmits it to the ground, thus preventing noise from mixing in. If this shield wire has grounding failure, that causes noise.

5. COMPACT DISC PLAYER

Compact Disc Players use a laser beam pick–up to read the digital signals recorded on the CD and reproduce analog signals of the music, etc.

HINT:

Never attempt to disassemble or oil any part of the player unit. Do not insert any object other than a disc into the magazine.

NOTICE:

CD players use an invisible laser beam which could cause hazardous radiation exposure. Be sure to operate the player correctly as instructed.

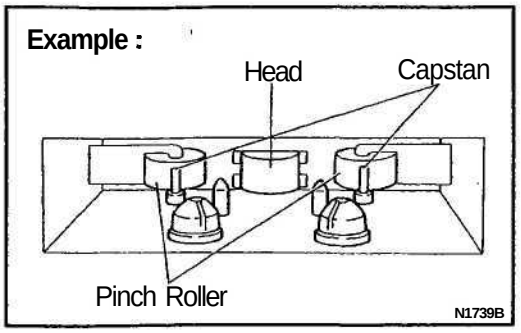

6. Tape Player/Head Cleaning:
MAINTENANCE

(a) Raise the cassette door with your finger.
Next, using a pencil or similar object, push in the guide.

(b) Using a cleaning pen or cotton applicator soaked in cleaner, clean the head surface, pinch rollers and capstans.

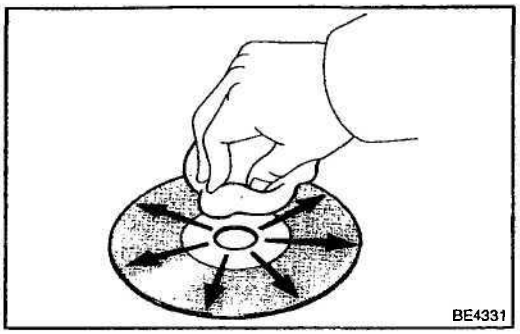

7. CD Player/Disc Cleaning:
MAINTENANCE

If the disc gets dirty, clean the disc by wiping the surface from the center to outside in the radial directions with a soft cloth.

NOTICE:

Do not use a conventional record cleaner or anti-static preservative.

8. OUTLINE OF AVC–LAN

(a) What is AVC–LAN?

AVC–LAN is the abbreviation, which stands for Audio Visual Communication-Local Area Network. This is a unified standard co–developed by 6 audio manufactures associated with Toyota Motor Corporation.

The Unified standard covers signals, such as audio signal, visual signal, signal for switch indication and communication signal.

(b) Objectives

Recently the car audio system has been rapidly developed and functions have been changed drastically. The conventional system has been switched to the multi–media type such as a navigation system. At the same time the level of customers needs to audio system has been upgraded. This lies behind this standardization.

The concrete objectives are explained below.

(1) When products by different manufactures were combined together, there used to be a case that malfunction occurred such as sound did not come out. This problem has been resolved by standardization of signals.

(2) Various types of after market products have been able to add or replace freely.

(3) Because of the above (2), each manufacture has become able to concentrate on developing products in their strongest field. This has enabled many types of products provided inexpensively.

(4) Conventionally, a new product developed by a manufacture could not be used due to a lack of compatibility with other manufactures products. Because of this new standard, users can enjoy compatible products provided for them timely.

(c) The above descriptions are the objectives to introduce AVC–LAN. By this standardization, development of new products will no longer cause systematic errors. Thus, this is very effective standard for a product in the future.

HINT:

- When +B short or GND short is detected in AVC–LAN circuit, communication stops. Accordingly the audio system does not function normally.
- When audio system is not equipped with a navigation system, audio head unit is the master unit. (When audio system is equipped with a navigation system, navigation ECU is the master unit.)
- The car audio system using AVC–LAN circuit has a diagnosis function.
- Each product has its own specified numbers called physical address. Numbers are also allotted to each function in one product, which are called logical address.

9. DIAGNOSIS FUNCTION

Error codes over tuner and connected equipment are displayed on the screen of tuner.

(a) Diagnosis start-up

For shifting to diagnosis mode, push "CD" switch 3 times with pressing "1" and "6" of PRESET switch at the same time while the audio power is OFF and ACC is ON.

To exit from diagnosis mode, press "CD" switch for 2 seconds or turn the ignition key OFF.

(When "1-190" is displayed, the mode is transferred to LAN check mode.)

(b) LAN check

When starting up the diagnosis mode, the mode turns to LAN check mode, the screen displays the code numbers (physical address) of tuner and connected equipment. Smaller codes are displayed in order, displayed code numbers are switched by operating TUNE "UP" or "DOWN" switch. In LAN check mode, by pressing "5" of PRESET switch for more than 2 secs., diagnosis memory of each equipment can be deleted, when deletion is completed, the mode returns to LAN check mode.

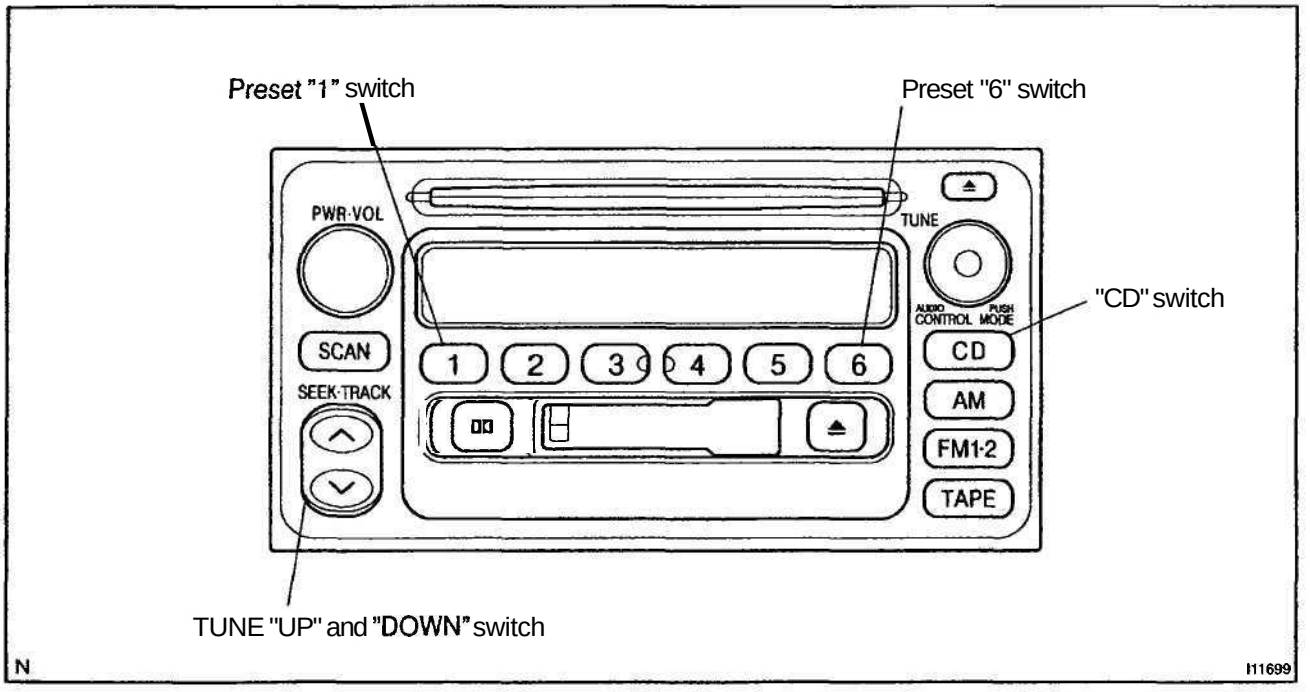

Code No. (physical address) List

Code No. (physical address)	Equipment name
190	Radio receiver assembly (Audio head unit)

(c) System check

- When pressing "1" of PRESET switch in LAN check mode, the mode turns to the system check mode, the system performs self diagnosis of connected equipment and displays the results.("SYS" (showing the system is under detection) is displayed.)
- Perform the operation shown in the following illustration, then read the result of the inspection.

HINT:

- It sometimes takes approx. 40 secs. till the system inspection is completed.
- The chart below is an example of when diagnosis code "21" appears on the physical address (190) equipment. (ROM error occurs on the radio receiver.)
- The smaller code numbers (physical address) are displayed in order (code No., diagnosis code, support code of diagnosis code (object equipment)).
- When no error is detected in the system, "00" is displayed.
- When an error code is detected, up to 6 codes per one system are displayed. Pressing TUNE "UP" or "DOWN" switches the display.
- In the system check mode, when pressing "6" of PRESET switch the mode returns to LAN check mode.

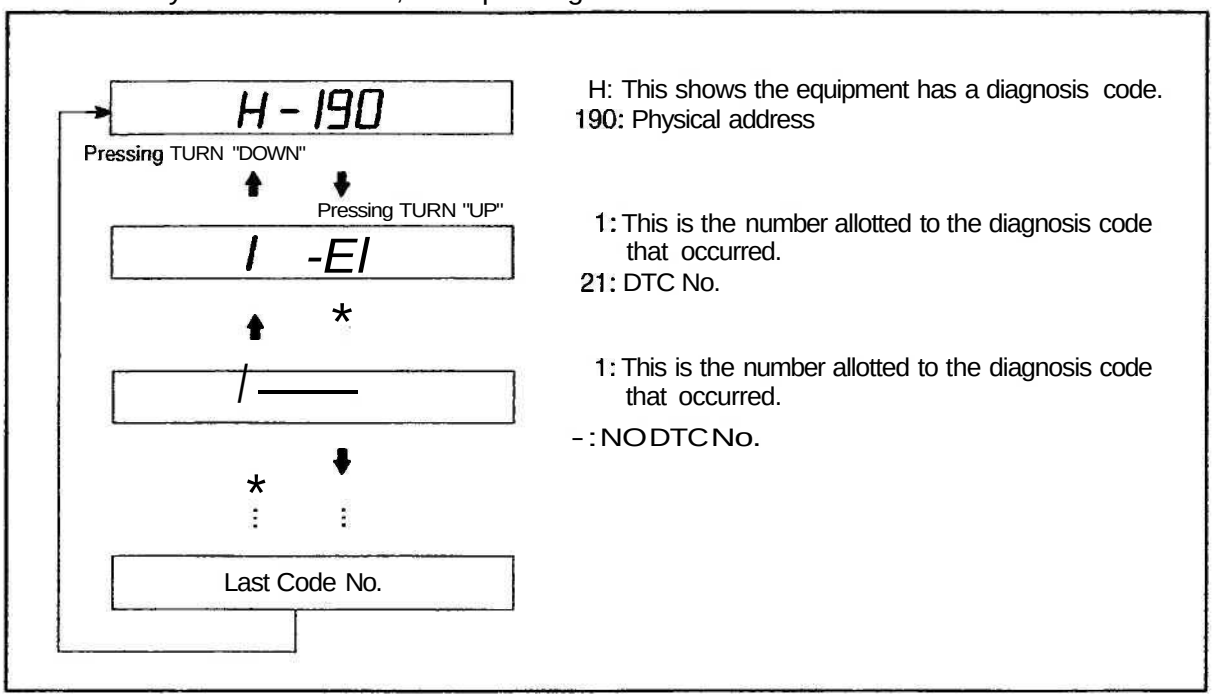

(d) Diagnosis memory

(1) In LAN check mode, when pressing "2" of PRESET switch the mode turns to the diagnosis memory mode. ("CODE" is displayed.)
The results of self diagnosis performed over tuner and connected equipment are memorized and displayed.

(2) Perform the operation shown in the following illustration, then read the result of the inspection.

HINT:

- The smaller code numbers (physical address) are displayed in order (code No., periodic communication number when error occurs, diagnosis code, and support code of diagnosis code (object equipment)).
- When no error is detected in the system, "00" is displayed. When an error code is detected, up to 6 codes per one system are displayed. Pressing TUNE "UP" or "DOWN" switches the display. Each diagnosis code is same as code in the system check mode.
- When pressing "6" of PRESET switch, the mode returns to LAN check mode.
- The following illustration below is an example of when diagnosis code "D1" appears on the code (190) and (240 or 360) equipment. (Communication error occurs between the radio receiver and CD changer.)

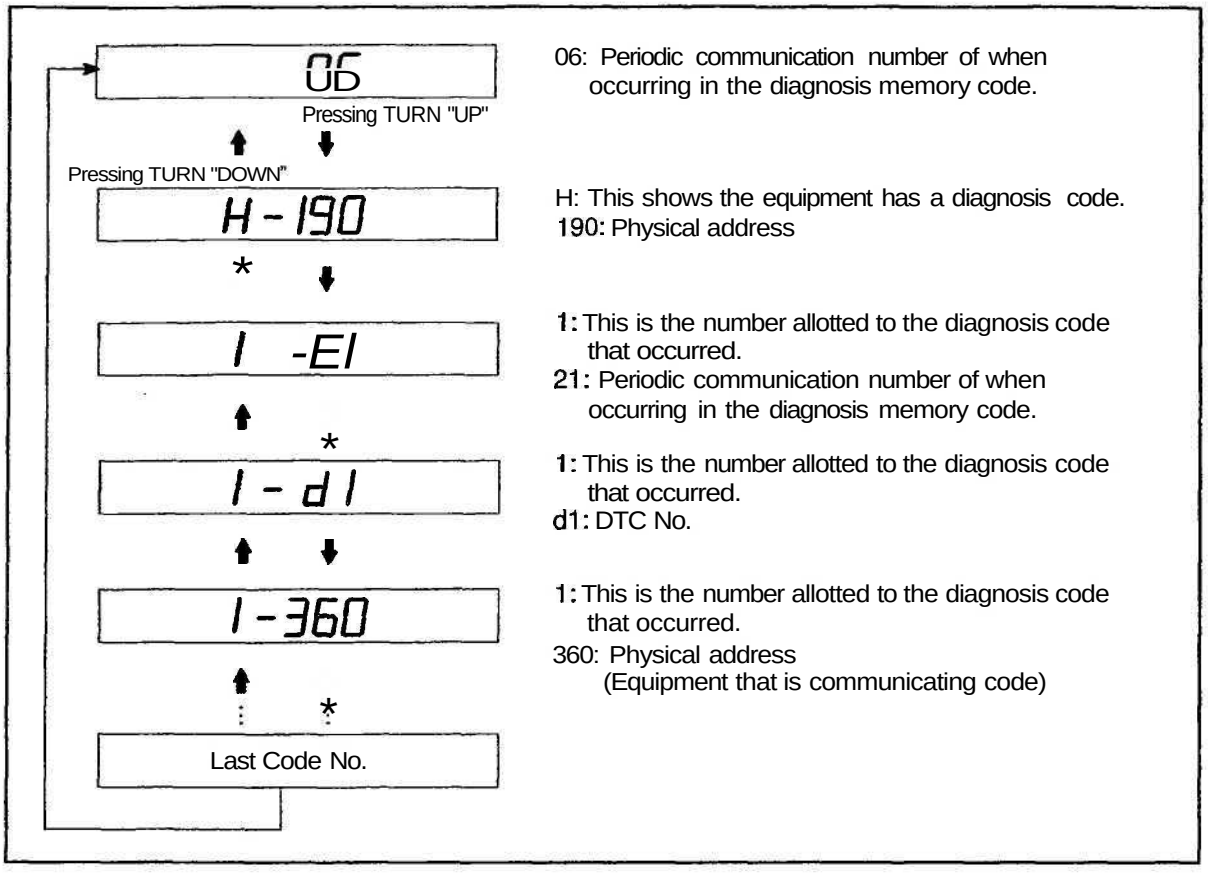

(e) Diagnosis memory clear
(1) After error is fixed, start up the diagnosis mode.
(2) Continue pressing preset switch "5" for 2 secs. (CLr is displayed.)
(3) Press the preset switch "2" and transfer to the diagnosis memory mode and check that the normal code (00) is output.

10. DIAGNOSIS CODE LIST

- If there is "O" in the column of system check, an error can be detected when the mode is switched to the system check mode.
- If there is "O" in the column of diagnosis mode, each unit is monitoring whether or not it has failure. In case of detecting failure, it memorizes DTC.

Parts Name	DTC	Diagnosis item	Diagnosis content	Countermeasure and inspected parts	System Check	Diagnosis memory
Head Unit (190)	42	FM tuner error	There is an error in FM tuner.	Radio receiver check.	X	O
	50	Cassette error	There is an error in cassette deck.		X	O
	51	Cassette eject error	Cassette can not be ejected from Head Unit.		X	O
	D1	Transmitter error	Communication with the equipment that is communicating has failed successively.	Radio receiver check. Wire harness and connecter check.	O	O
	D2	Periodic communication no response	Error in periodic communication.	• Wire harness and connector	X	O
	FF	Diagnosis no response	Result of diagnosis is not issued from start to finish.	Radio receiver check.	O	X
AMP (440)	D1	Transmitter error	Communication with the equipment that is communicating has failed successively.	Stereo component amplifier check.	O	O
	D4	Periodic communication error	Connection confirmation has not come from the equipment that is communicating	• Radio receiver check. • Wire harness check.	X	O

TROUBLESHOOTING

NOTICE:

When replacing the internal mechanism (computer part) of the audio system, be careful that no part of your body or clothing comes in contact with the terminals of the leads from the IC, etc. of the replacement part (spare part).

HINT:

This inspection procedure is a simple troubleshooting which should be carried out on the vehicle during system operation and was prepared on the assumption of system component troubles (except for the wires and connectors, etc.).

Always inspect the trouble taking the following items into consideration.

- Open or short circuit of the wire harness
- Connector or terminal connection fault

	Problem	No.
Radio	Radio not operating when power switch turned to 'ON'.	1
	Display indicates when power switch turned to 'ON', but no sound (including 'noise') is produced.	2
	Noise present, but AM - FM not operating.	3
	Any speaker does not work.	4
	Any AM or FM does not work.	5
	Few preset turning bands.	5
	Reception poor.	6
	Sound quality poor.	7
	Preset memory disappears.	8
Tape Player	Cassette tape cannot be inserted.	9
	Cassette tape inserted, but no power.	10
	Power coming in, but tape player not operating.	11
	Any speaker does not work.	12
	Sound quality poor.	13
	Tape jammed, malfunction with tape speed or auto–reverse.	14
	Cassette tape will not eject.	15
CD Player	CD cannot be inserted.	16
	CD inserted, but no power.	17
	Power coming in, but CD player not operating.	18
	Sound jumps.	19
	Sound quality poor (Volume faint).	20
	Any speaker does not work.	21
	CD will not be ejected.	22
Power Amplifier	No power coming in.	23
	Power coming in, but power amplifier not operating.	24
	Any speaker does not work.	25
Noise	Noise occurs	26
	Noise produced by vibration or shock while driving.	27
	Noise produced when engine starts.	28

The term "AM" includes LW,MW and SW, and the term "FW" includes UKW.

1	Radio	RADIO NOT OPERATING WHEN POWER SWITCH TURNED TO "ON"

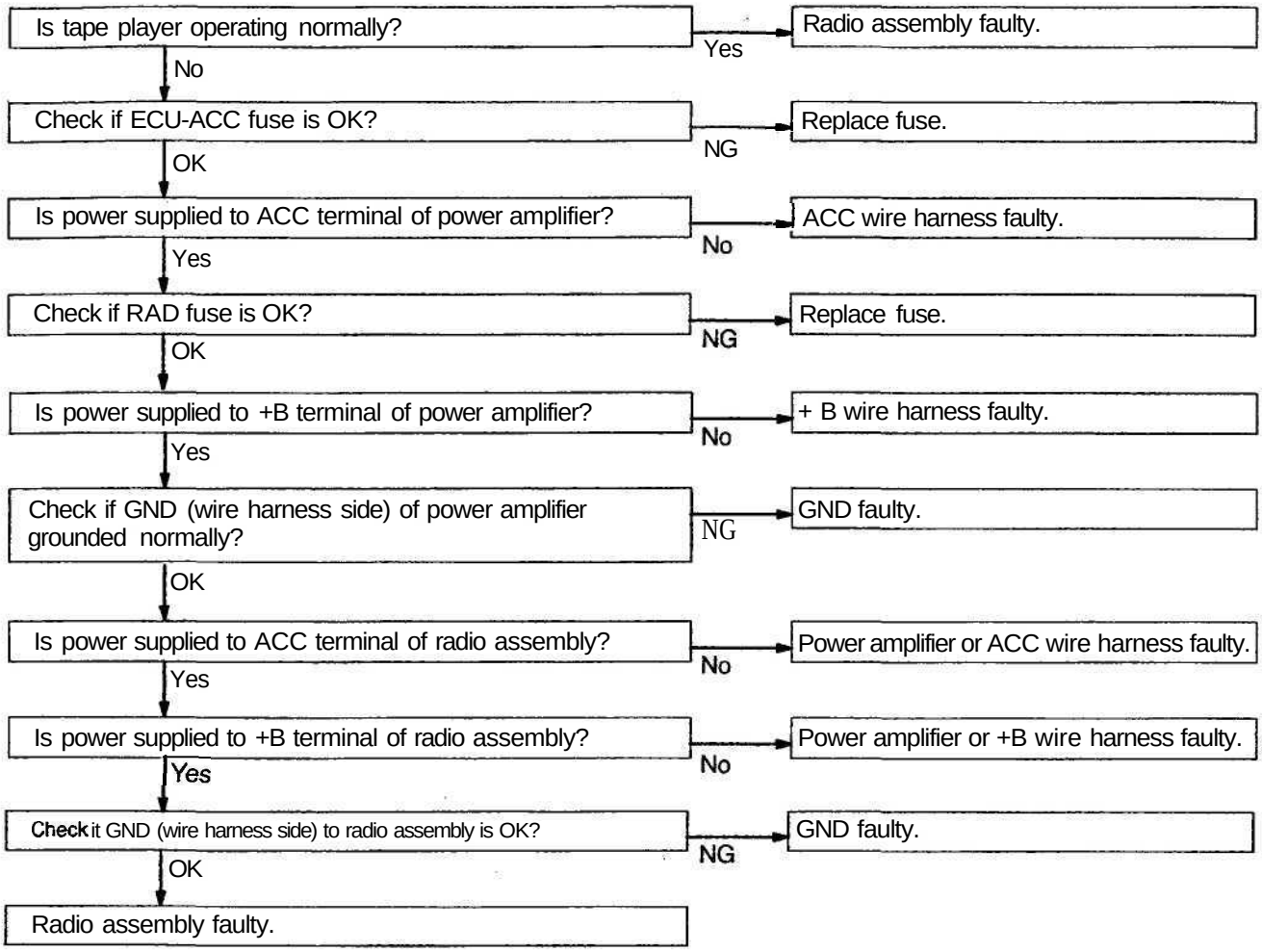

2	Radio	DISPLAY INDICATES WHEN POWER SWITCH TURNED TO "ON", BUT NO SOUND (INCLUDING "NOISE") IS PRODUCED

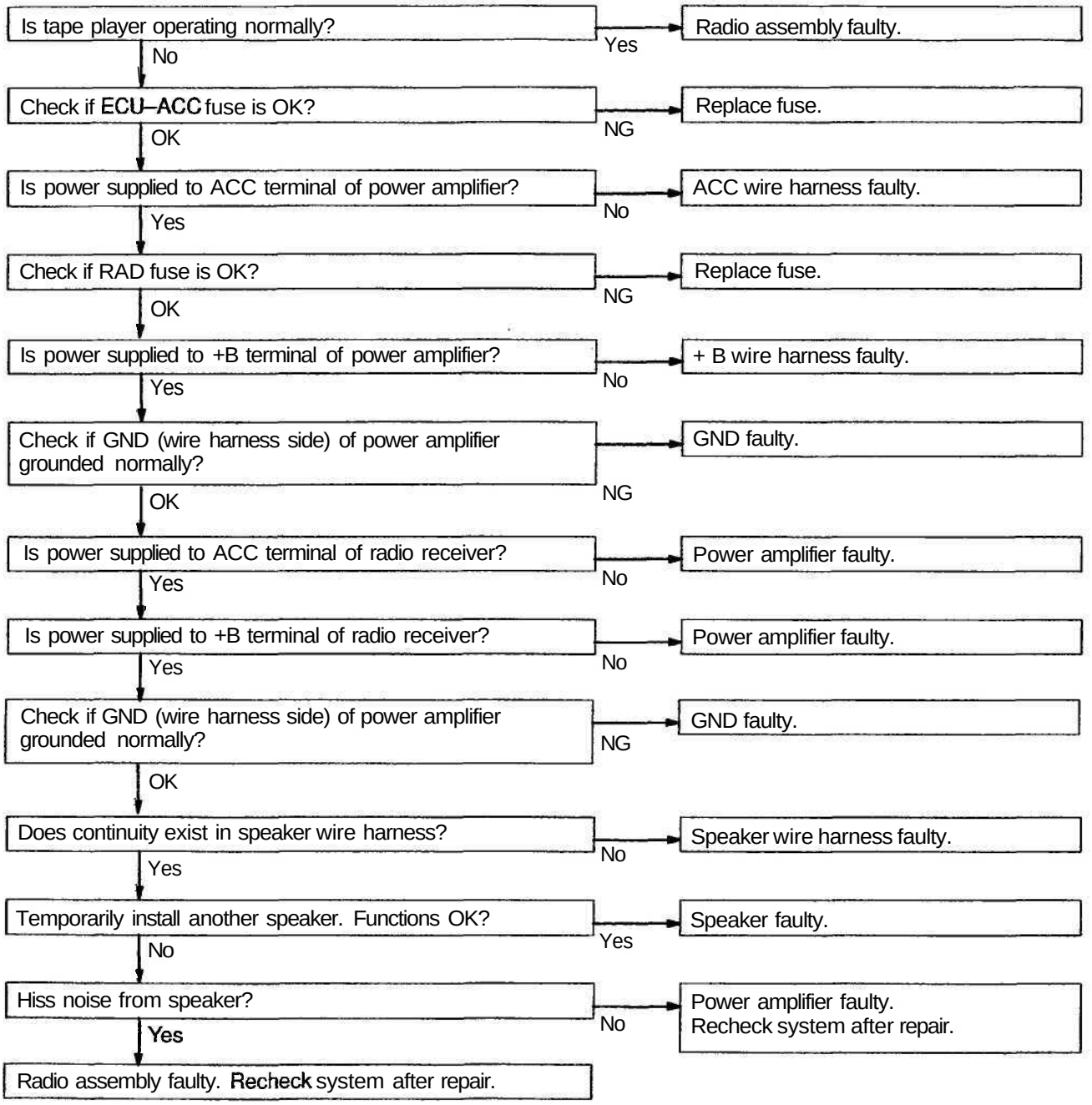

3	Radio	NOISE PRESENT, BUT AM-FM NOT OPERATING

Go to No.25

If radio side faulty. → Radio faulty.

4	Radio	ANY SPEAKER DOSE NOT WORK

Is tape player operating normally?
- Yes → Radio assembly faulty.
- No ↓

Is hiss noise produced by non-functioning speaker?
- Yes → Radio assembly faulty. Recheck system after repair.
- No ↓

Does continuity exist in speaker wire harness?
- No → Speaker wire harness faulty.
- Yes ↓

Temporarily install another speaker? Functions OK?
- Yes → Speaker faulty.
- No ↓

Power amplifier faulty. Recheck system after repair.

5	Radio	ANY AM OR FM DOES NOR WORK FEW PRESET TUNING BANDS

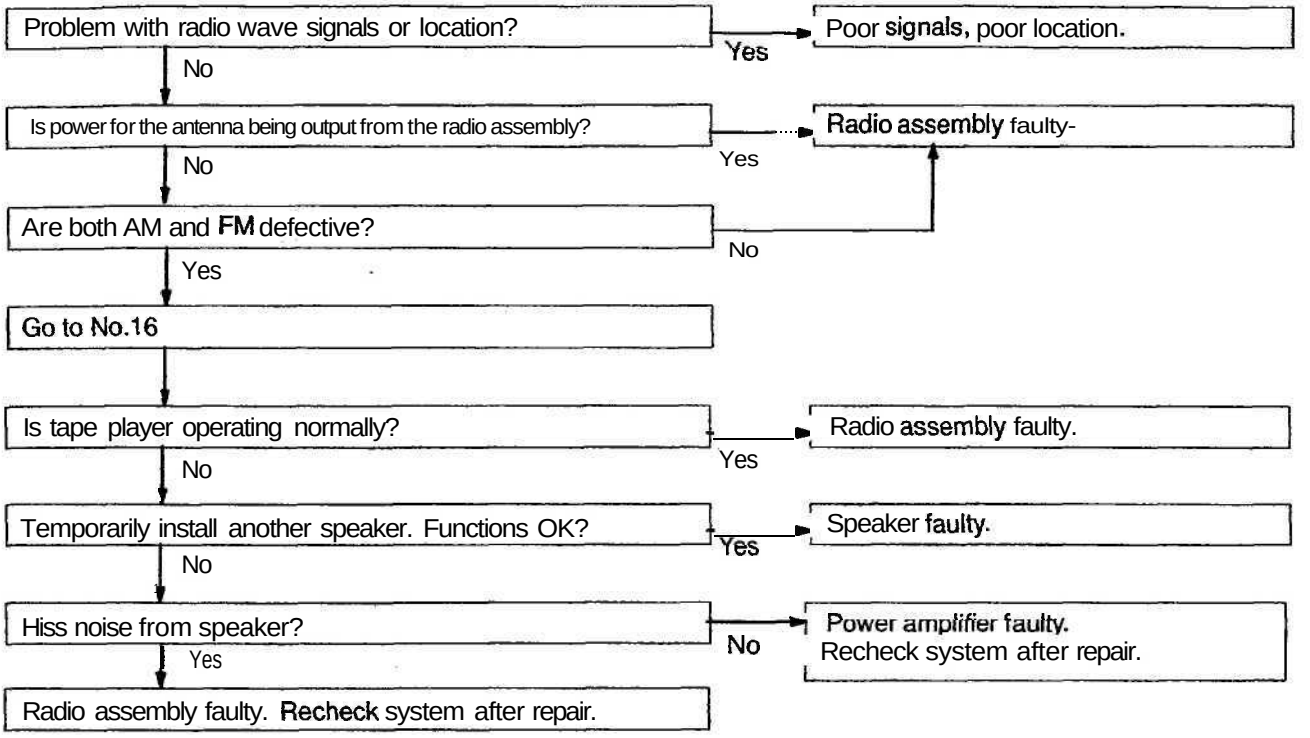

6	Radio	POOR RECEPTION

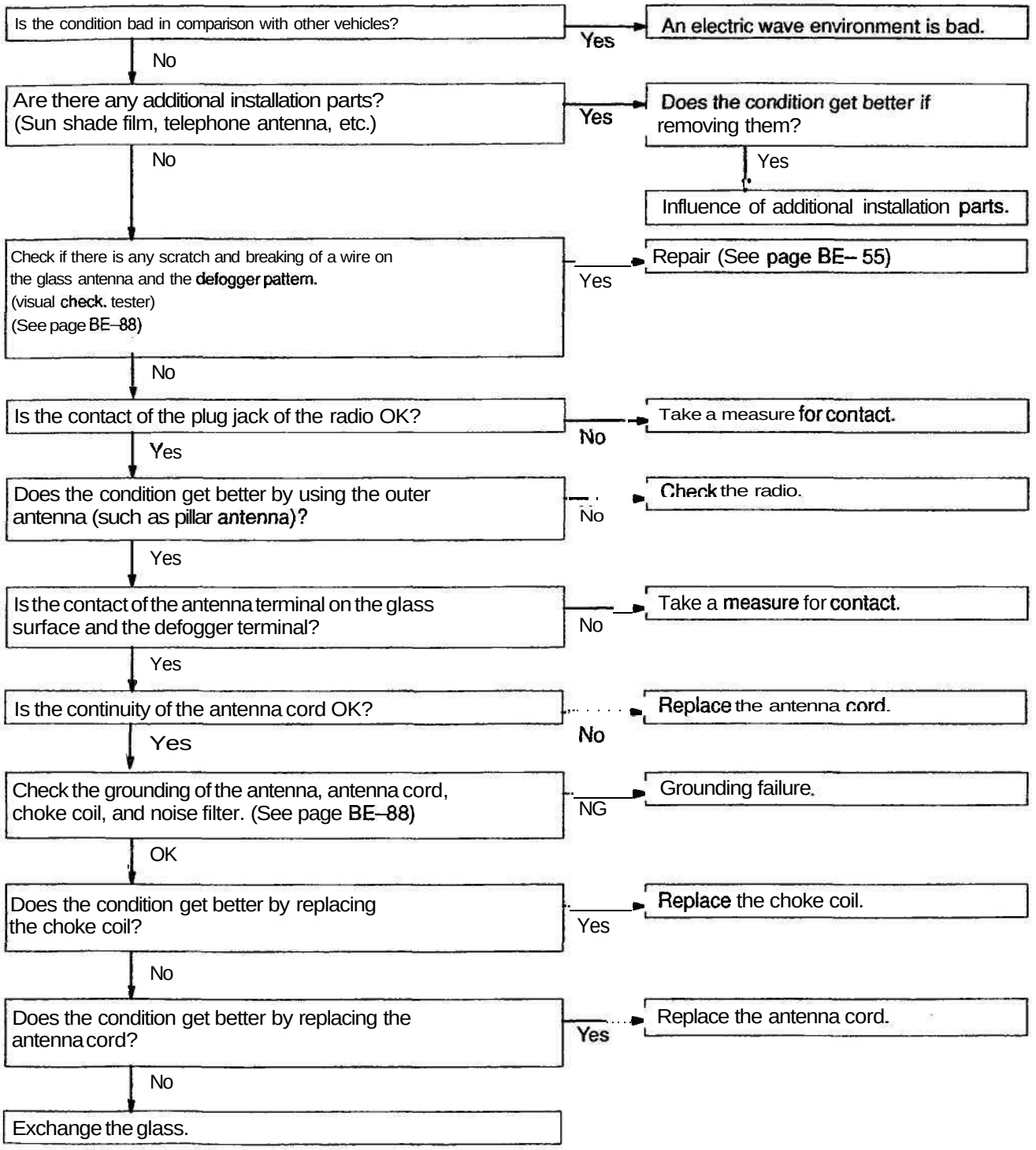

7 Radio — SOUND QUALITY POOR

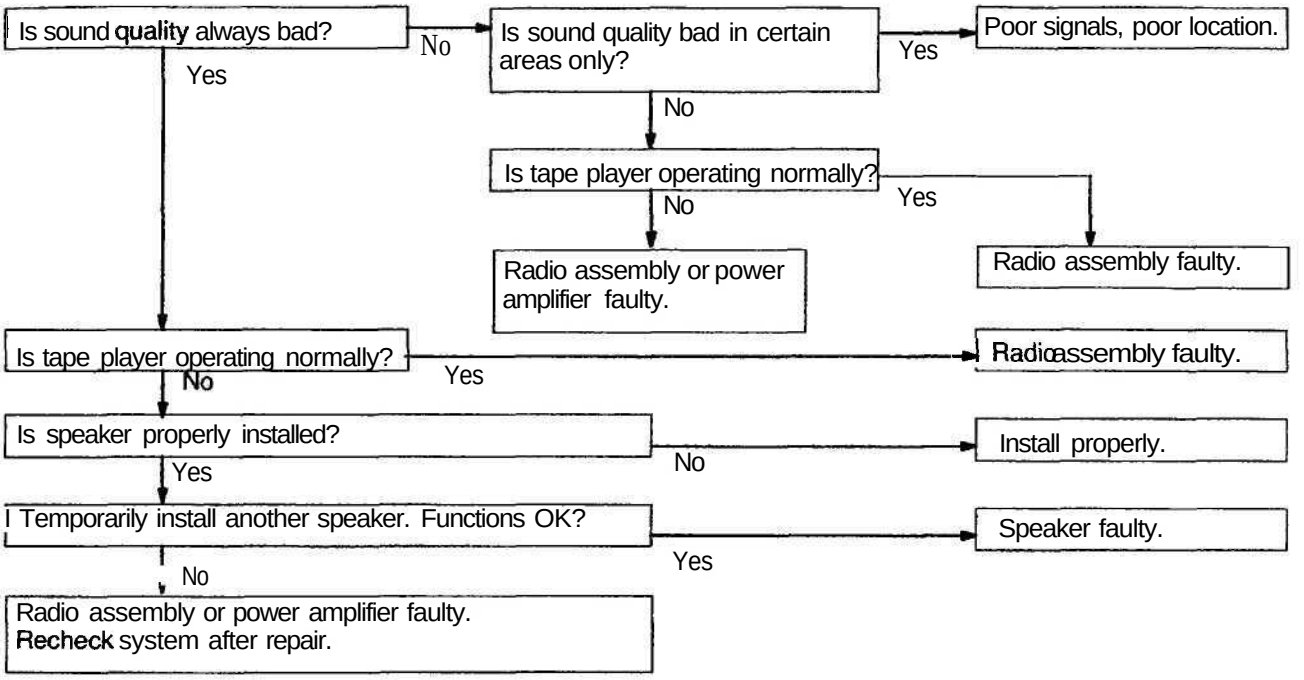

8 Radio — PRESET MEMORY DISAPPEARS

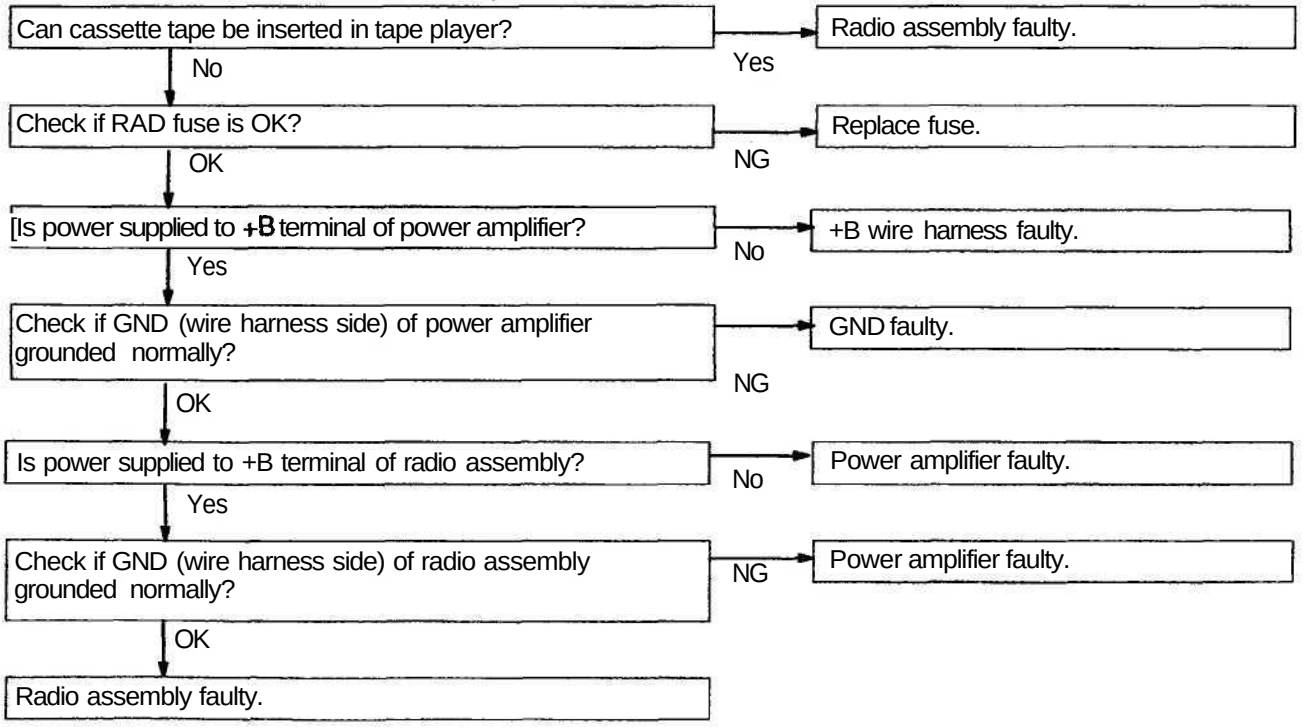

9	Tape Player	CASSETTE TAPE CANNOT BE INSERTED

Is there a foreign object inside tape player?
- Yes → Remove foreign object.
- No ↓

Is auto search button radio operating normally?
- Yes → Radio assembly faulty.
- No ↓

Check if RAD fuse is OK?
- NG → Replace fuse.
- OK ↓

Is power supplied to +B terminal of power amplifier?
- No → +B wire harness faulty.
- Yes ↓

Check if GND (wire harness side) of power amplifier grounded normally?
- NG → GND faulty.
- OK ↓

Is power supplied to +B terminal of radio assembly?
- No → Power amplifier faulty.
- Yes ↓

Check if GND (wire harness side) of radio assembly grounded normally?
- NG → Power amplifier faulty.
- OK ↓

Radio assembly faulty.

10	Tape Player	CASSETTE TAPE INSERTED, BUT NO POWER

Is radio operating normal?
- Yes → Radio assembly faulty.
- No ↓

Check if ECU-ACC fuse is OK?
- NG → Replace fuse.
- OK ↓

Is power supplied to ACC terminal of power amplifier?
- No → ACC wire harness faulty.
- Yes ↓

Check if RAD fuse is OK?
- NG → Replace fuse.
- OK ↓

Is power supplied to +B terminal of radio assembly?
- No → +B wire harness faulty.
- Yes ↓

Is power supplied to ACC terminal of radio assembly?
- No → Power amplifier faulty.
- Yes ↓

Radio assembly faulty.

11	Tape Player	POWER COMING IN, BUT TAPE PLAYER NOT OPERATING

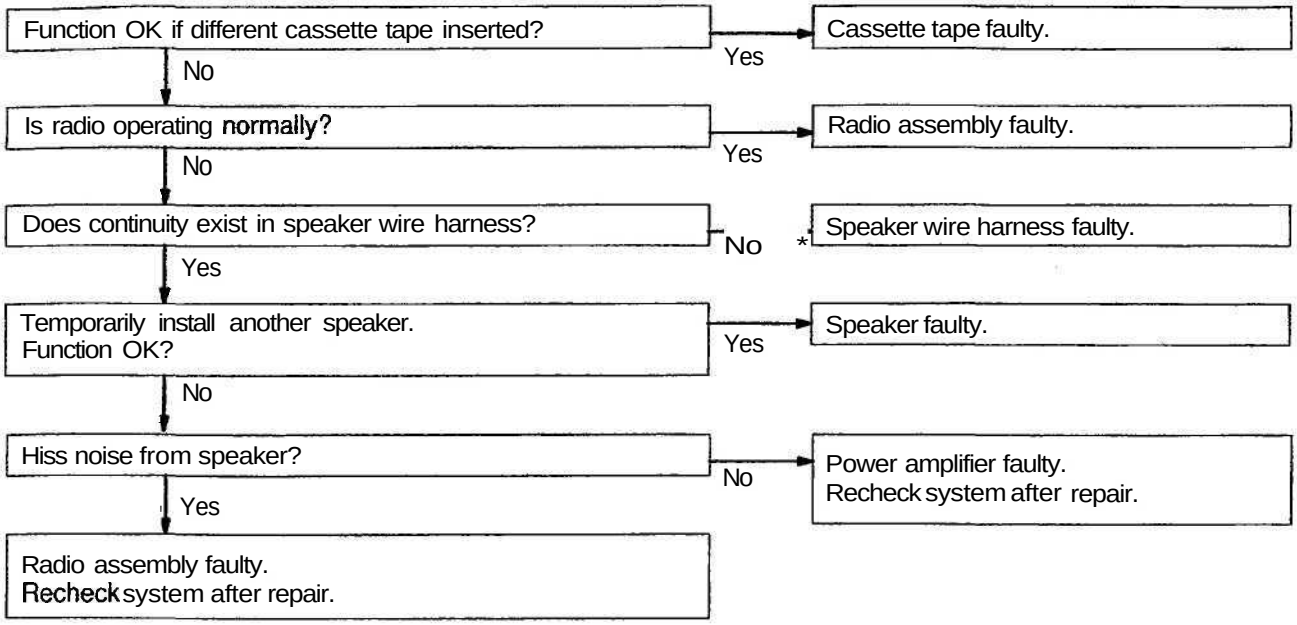

12	Tape Player	ANY SPEAKER DOES NOT WORK

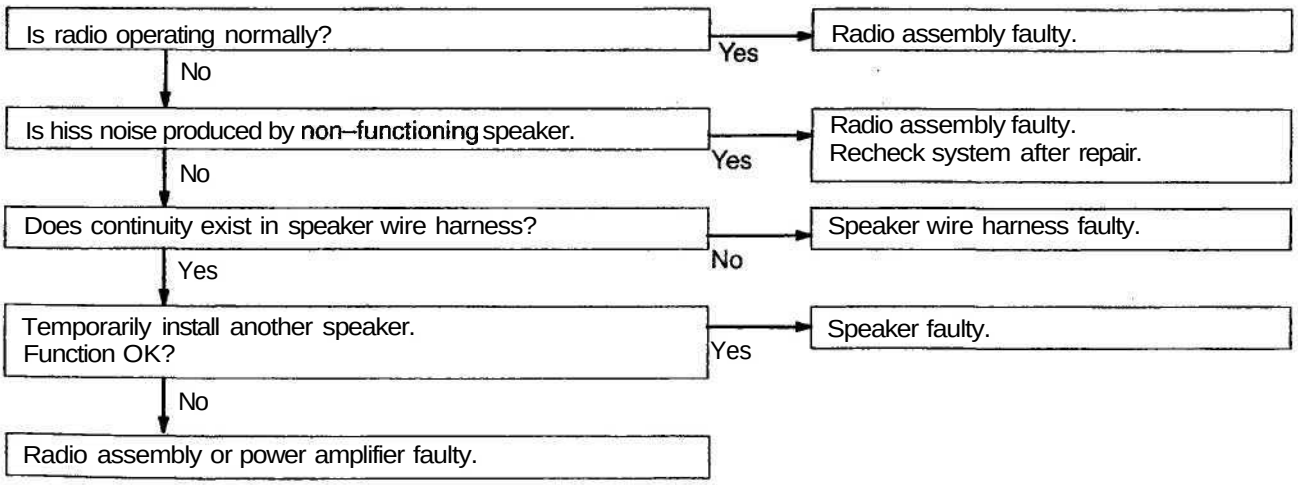

13	Tape Player	SOUND QUALITY POOR (VOLUME FAINT)

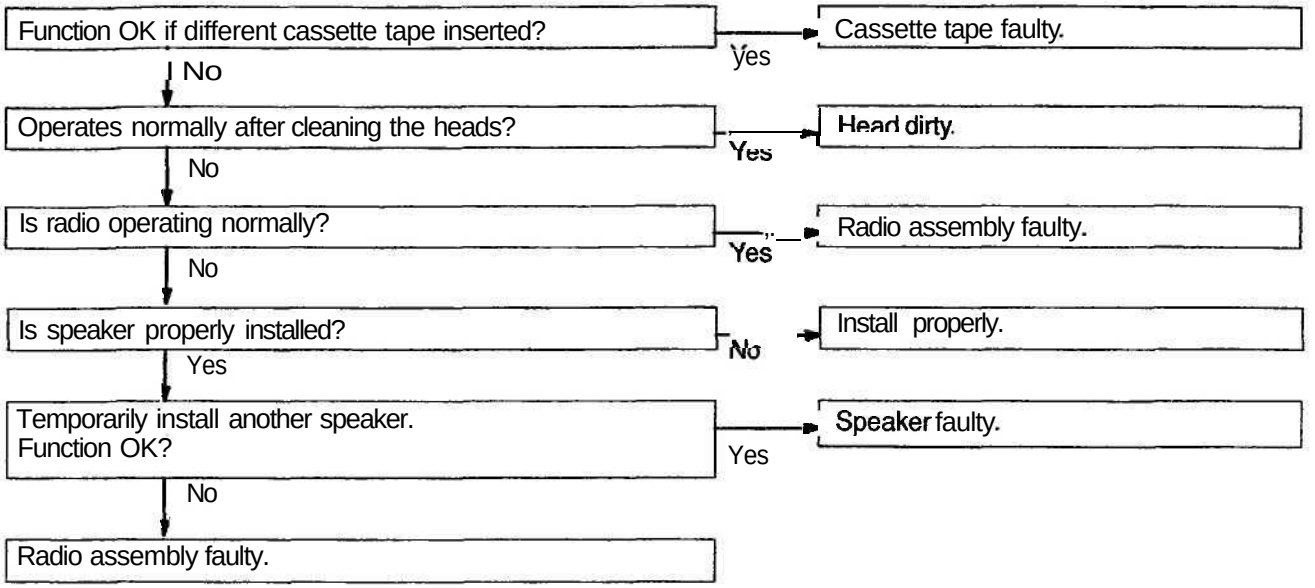

14	Tape Player	TAPE JAMMED MALFUNCTION WITH TAPE SPEED OR **AUTO-REVERSE**

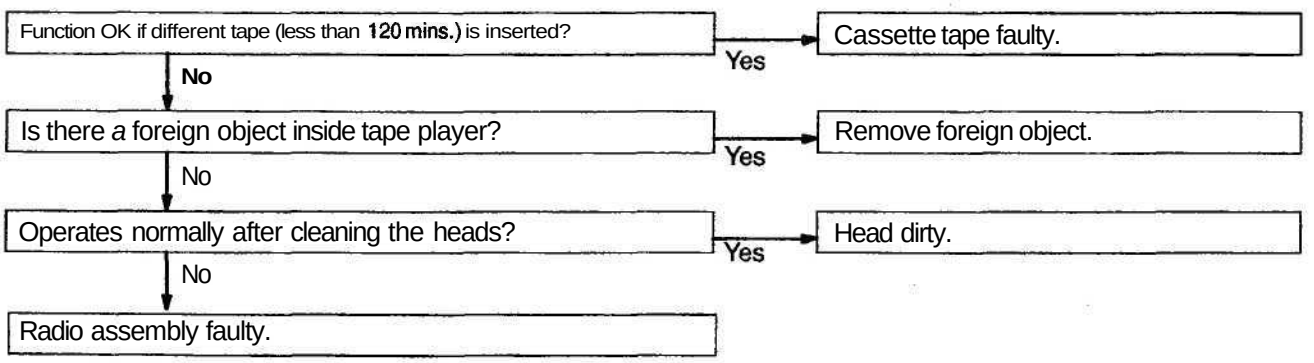

15	Tape Player	CASSETTE TAPE WILL NOT BE EJECTED

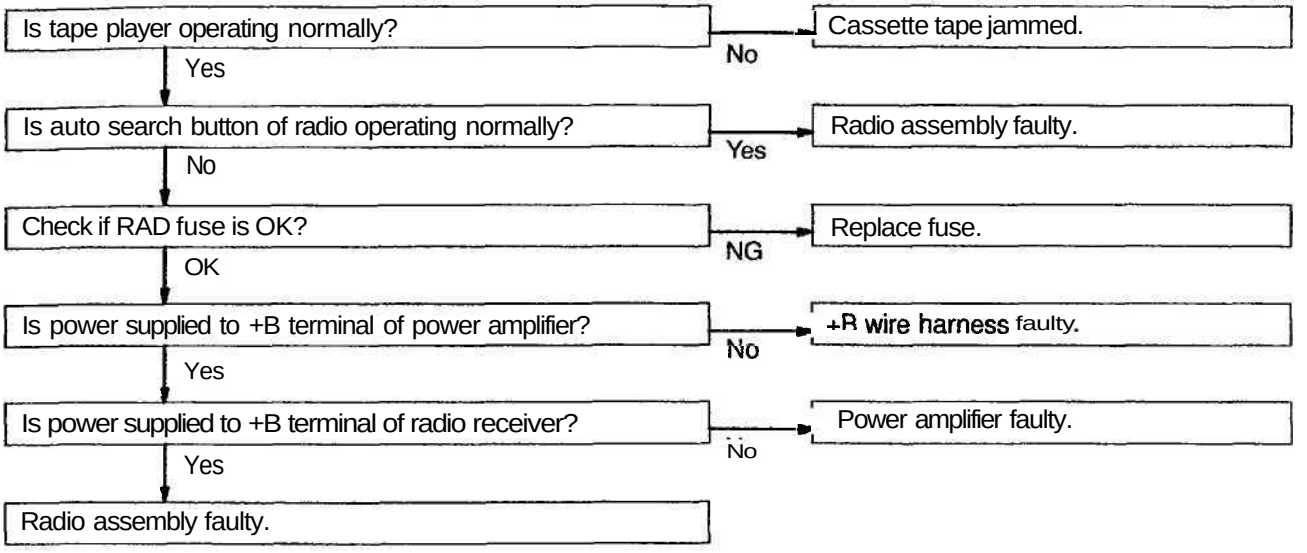

16	CD Player	CD CANNOT BE INSERTED

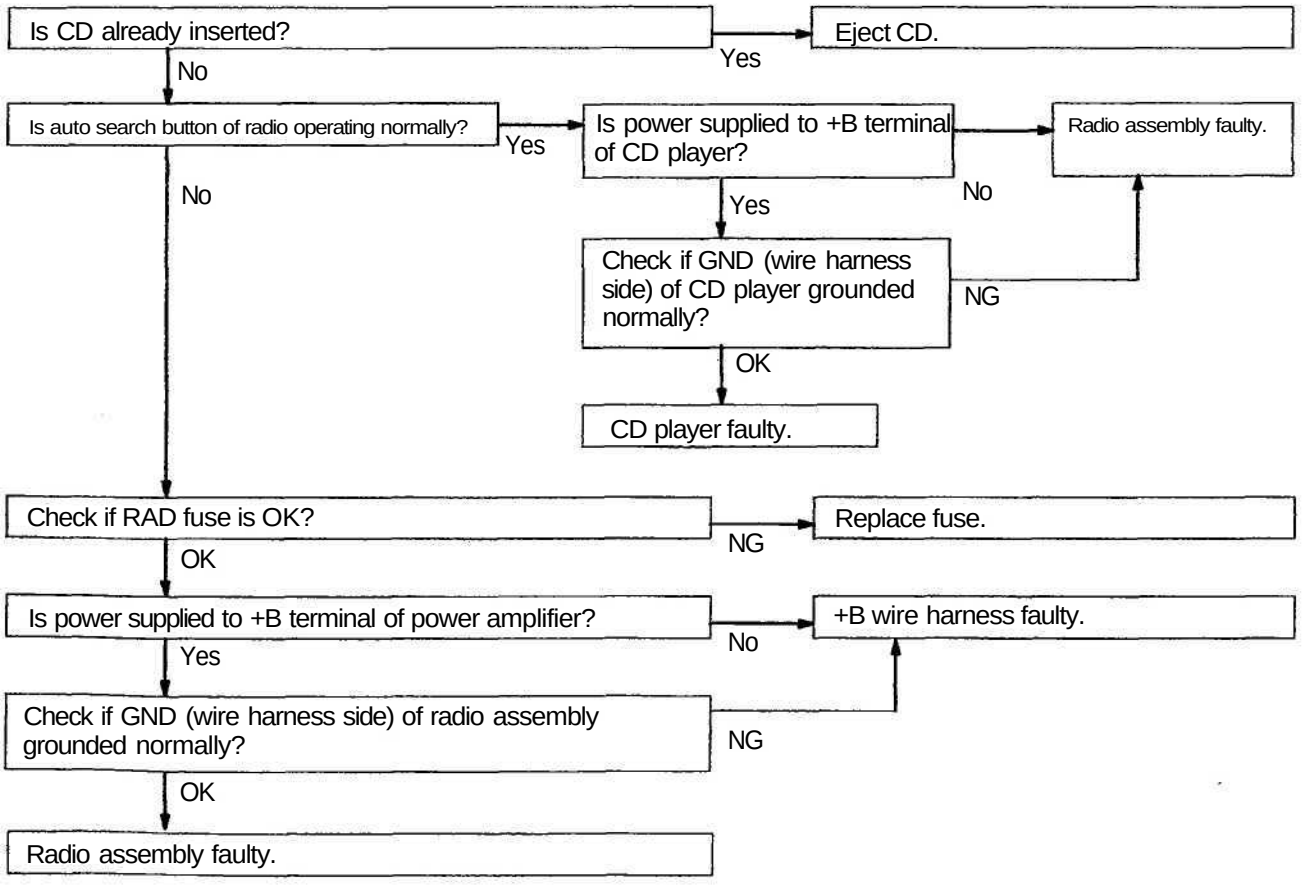

17	CD Player	CD INSERTED, BUT NO POWER

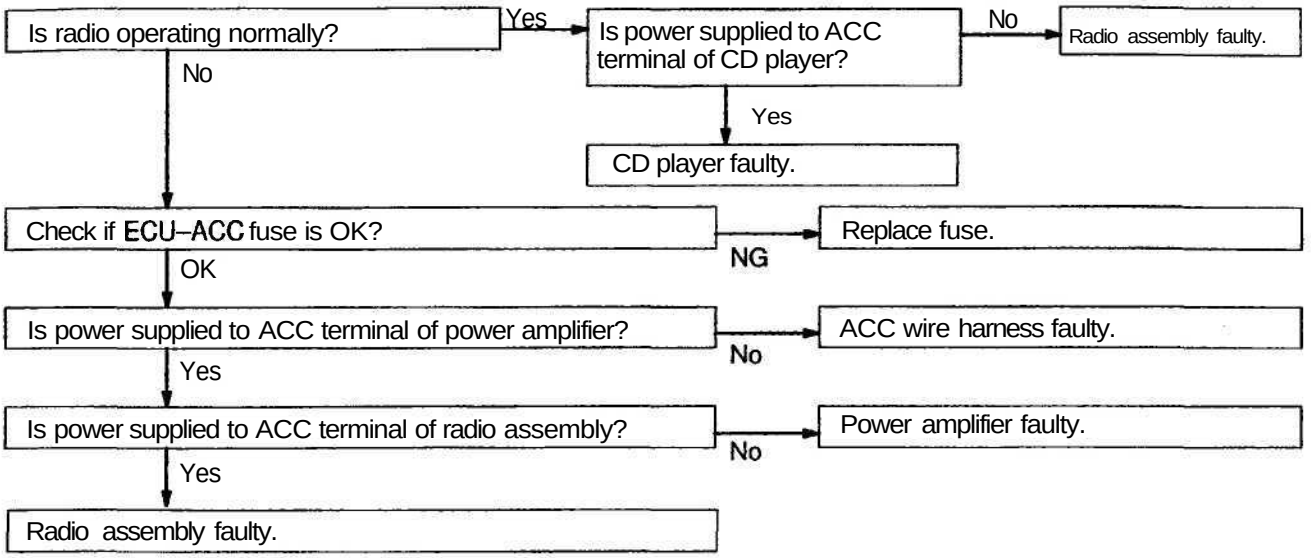

18	CD Player	POWER COMING IN, BUT CD PLAYER NOT OPERATING

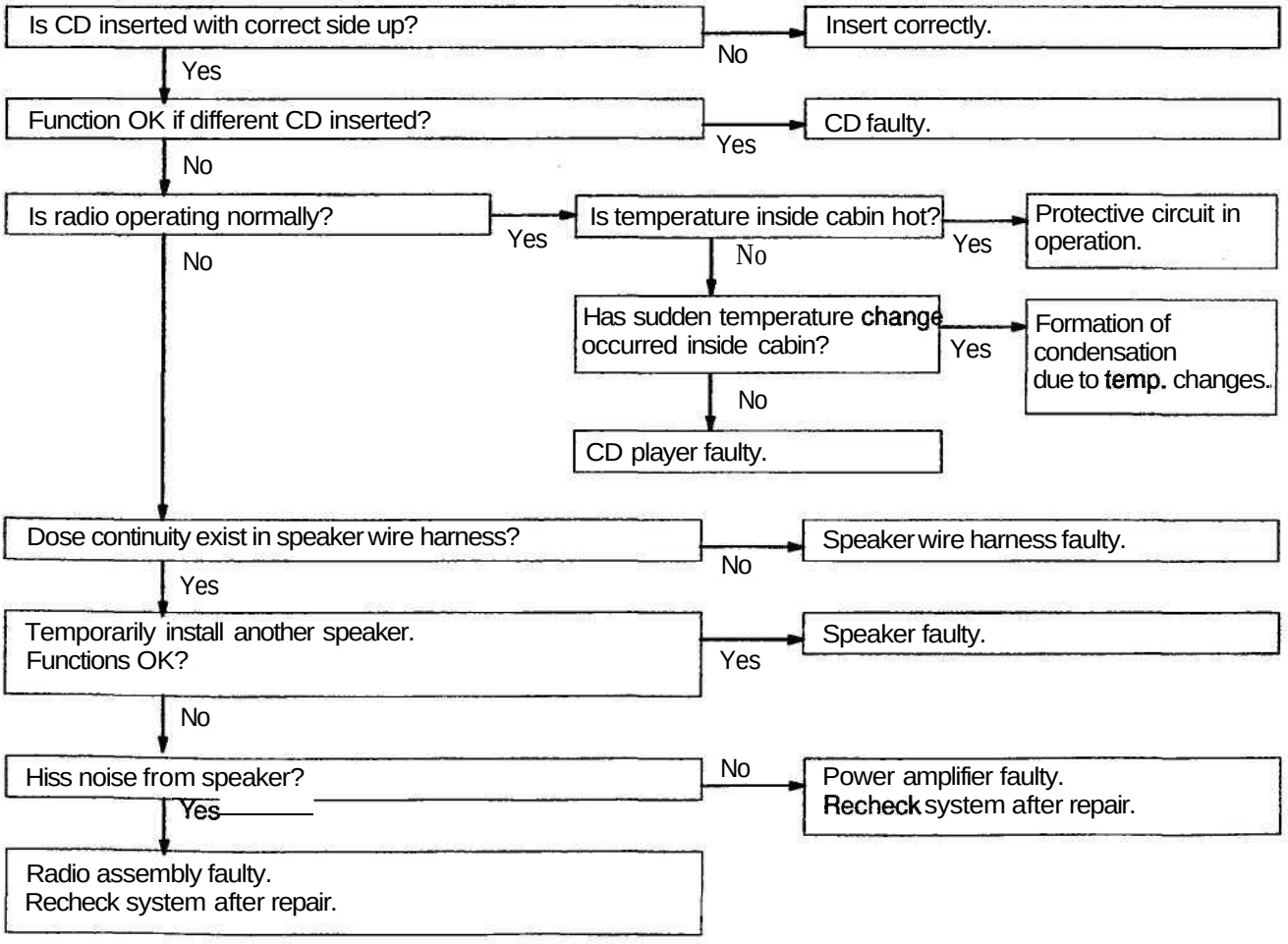

19	CD Player	SOUND JUMPS

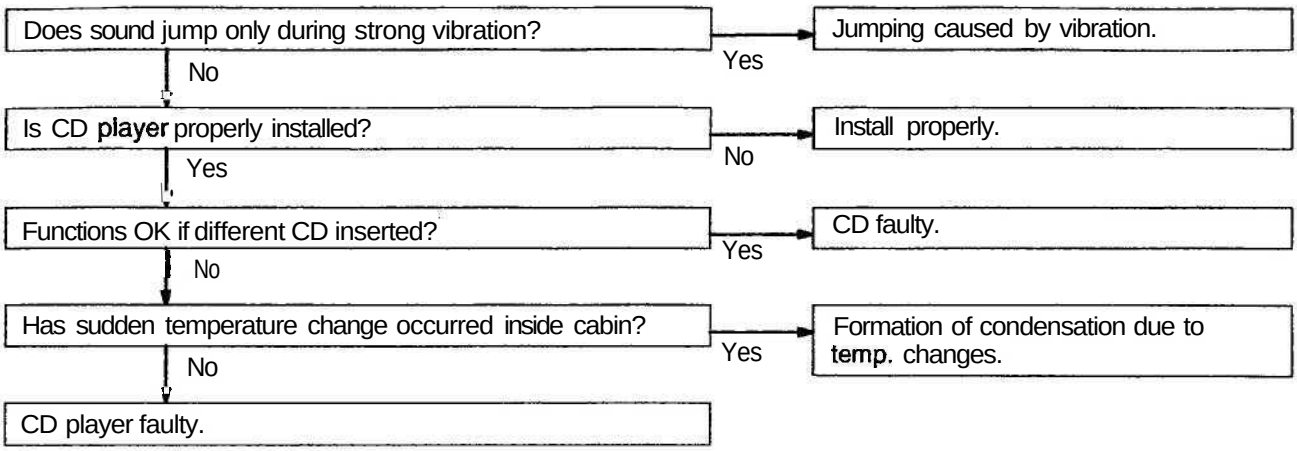

20	CD Player	SOUND QUALITY POOR (VOLUME FAINT)

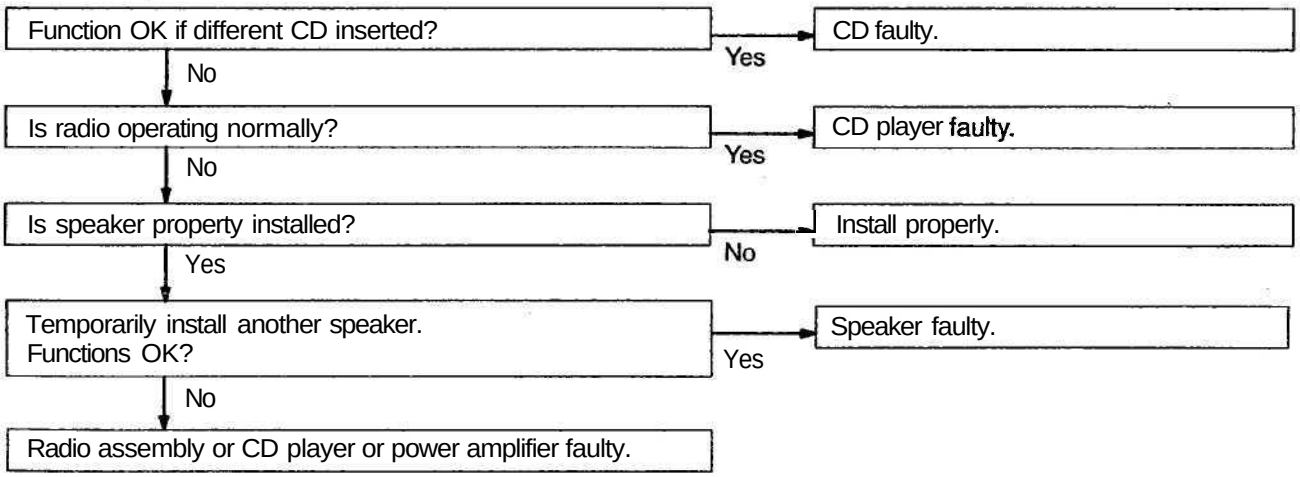

21	CD Player	ANY SPEAKER DOES NOT WORK

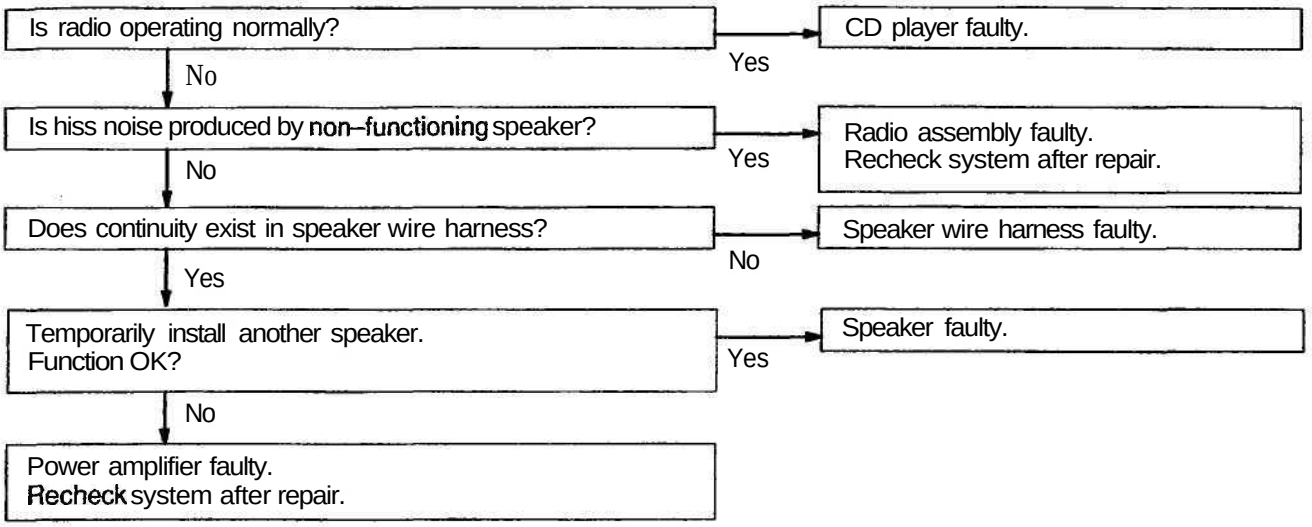

22	CD Player	CD WILL NOT BE EJECTED

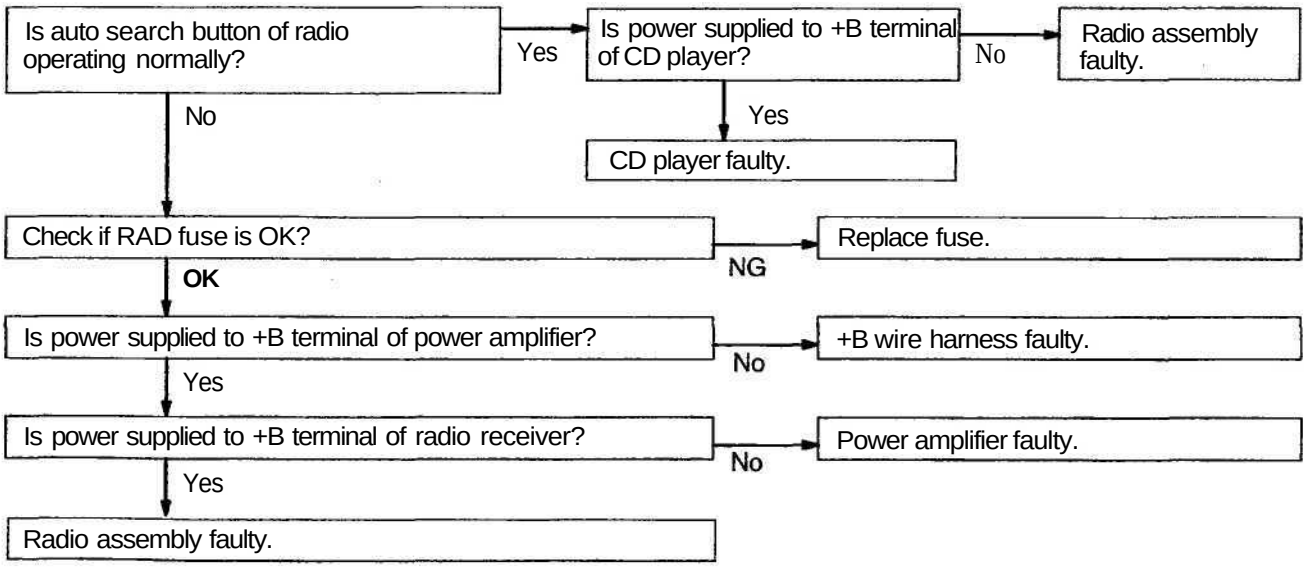

23	Power Amplifier	NO POWER COMING IN

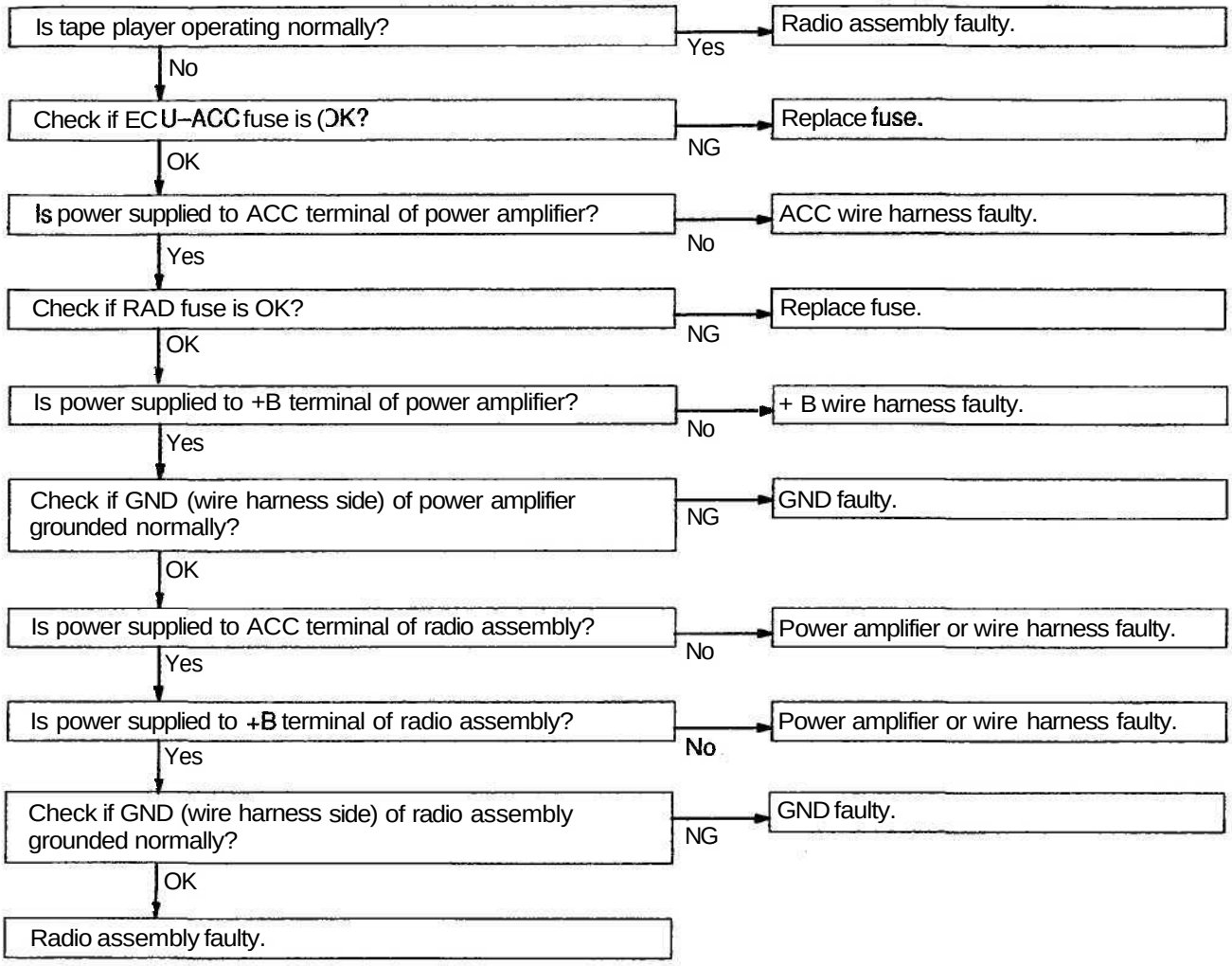

24	Power Amplifier	POWER COMIMG IN, BUT WOOFER (POWER) AMPLIFIER NOT OPERATING

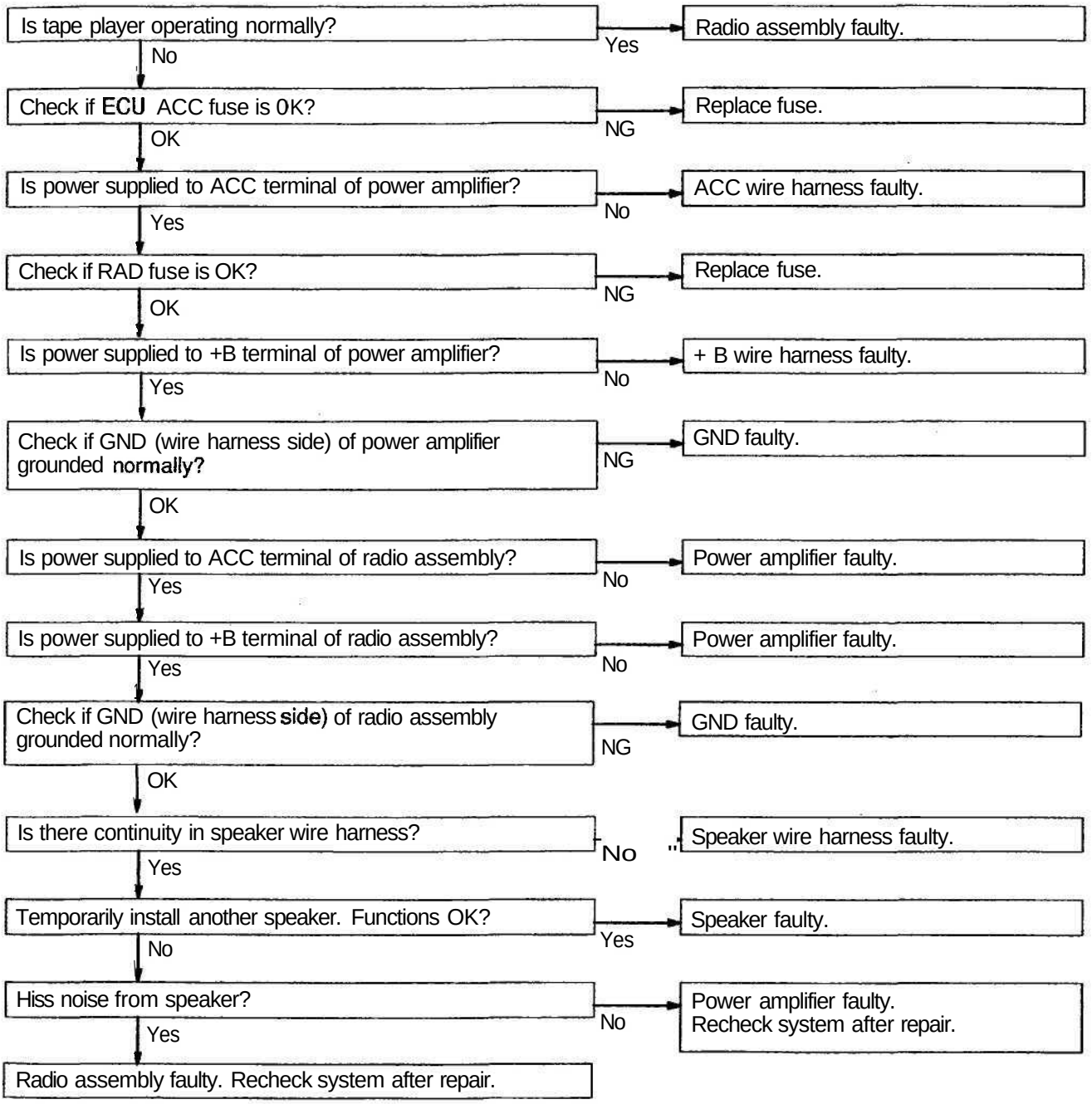

25 Power Amplifier | **ANY SPEAKER DOES NOT WORK**

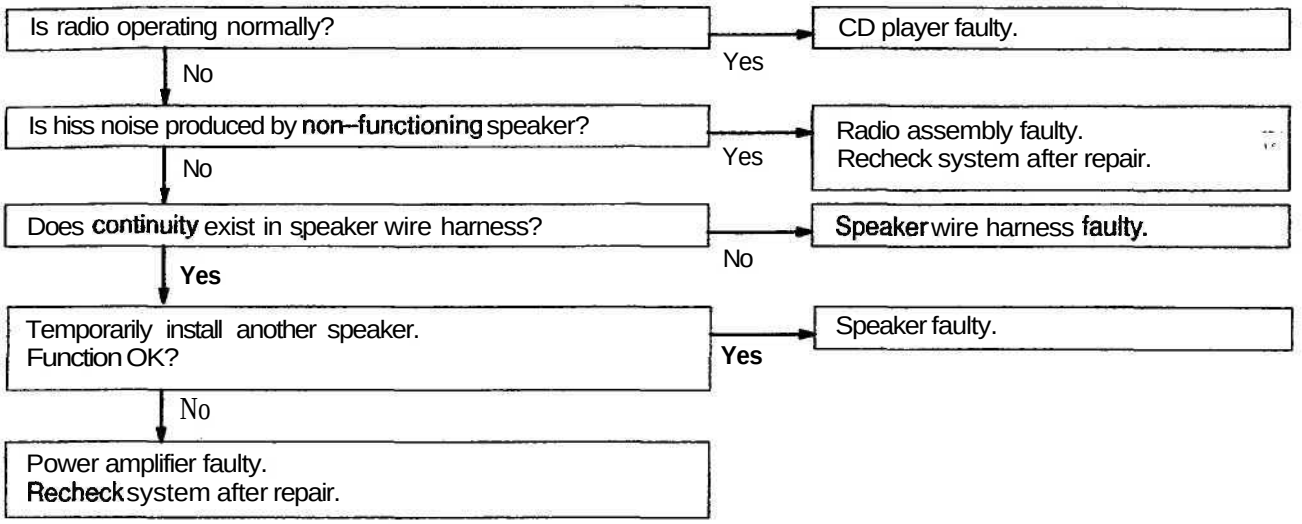

26	Noise	NOISE OCCURS

Does the noise occur only in the radio?
(It occurs in the cassette and CD.) → No → Refer to No.27.
Yes

Does the noise occur in a particular place?
Yes → An electric environment.
No

Is there any additional installation part around the glass imprinted antenna? (Sun shade film, telephone antenna etc.)
Yes → Does the noise stop by removing it?
Yes → Influence of the film or the noise radiation of the additional installation part.
No

Does the noise occur even pulling out the antenna cord from the radio?
Yes → Check the radio.
No

Does the noise occur even after pulling out the antenna terminal on the glass surface?
Yes → Noise mixing into the antenna cable.
No

Isn't there any adhesive (Butyl rubber) stuck on the bases of the antenna terminal, defogger terminal and bus bar?
Yes → Failure of glass installation. Must plane the butyl rubber.
No

Does the noise occur even after pulling out the defogger terminal?
Yes → Interfering noise from the defogger line and choke coil.
No

Check the grounding of the antenna, antenna cord, coke coil, and noise filter. (See page BE–88)
NG → Grounding failure.
OK

Does the condition get better by replacing the choke coil?
Yes → Replace the choke coil.
No

Does the condition get better by replacing the antenna cord.
Yes → Replace the antenna cord.
No

Noise rediates directly to the antenna from the generation source.

27	Noise	NOISE PRODUCED BY VIBRATION OR SHOCK WHILE DRIVING

Is speaker properly installed?
- No → Install properly.
- Yes ↓

Is speaker properly installed?
- No → Install properly.
- Yes ↓

With vehicles stationary lightly tap each system. Is noise produced?
- Yes → Each system faulty.
- No ↓

Noise is produced from static eletricity accumulating in the vehicle body.

28	Noise	NOISE PRODUCED WHEN ENGINE STARTS

Whistling noise which becomes high-pitched when accelerator strongly depressed, disappears shortly after engine stops.
- Yes → Generator noise.
- No ↓

Whining noise occurs when A/C is operating.
- Yes → A/C noise.
- No ↓

Scratching noise occurs during sudden acceleration, driving on rough roads or when ignition switch is turned ON.
- Yes → Fuel gauge noise.
- No ↓

Clicking sound is heard when horn button is pressed, then released. Whirring/grating sound is heard when pushed continuously.
- Yes → Horn noise.
- No ↓

Murmuring sound stops when engine stops.
- Yes → Ignition noise.
- No ↓

Tick-tack noise occurs in co-ordination with blinking offlasher.
- Yes → Turn signal noise.
- No ↓

Noise occurs during window washer operation.
- Yes → Washer noise.
- No ↓

Scratching noise occurs while engine is running, and continues a while even after engine stops.
- Yes → Engine coolant temp. gauge noise.
- No ↓

Scraping noise in line with wiper beat.
- Yes → Wiper noise.
- No ↓

Other type of noise

BEOPP-02

LOCATION

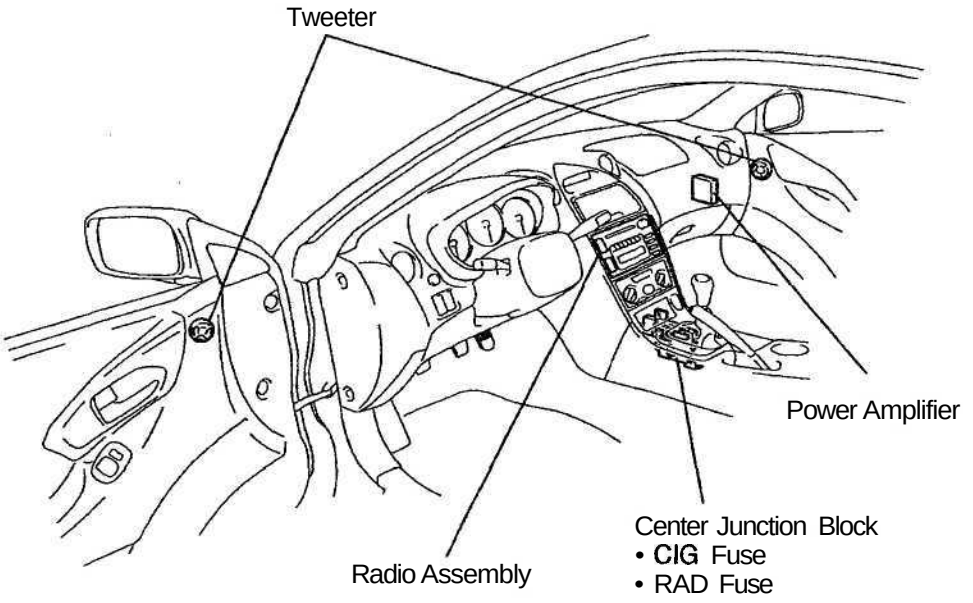

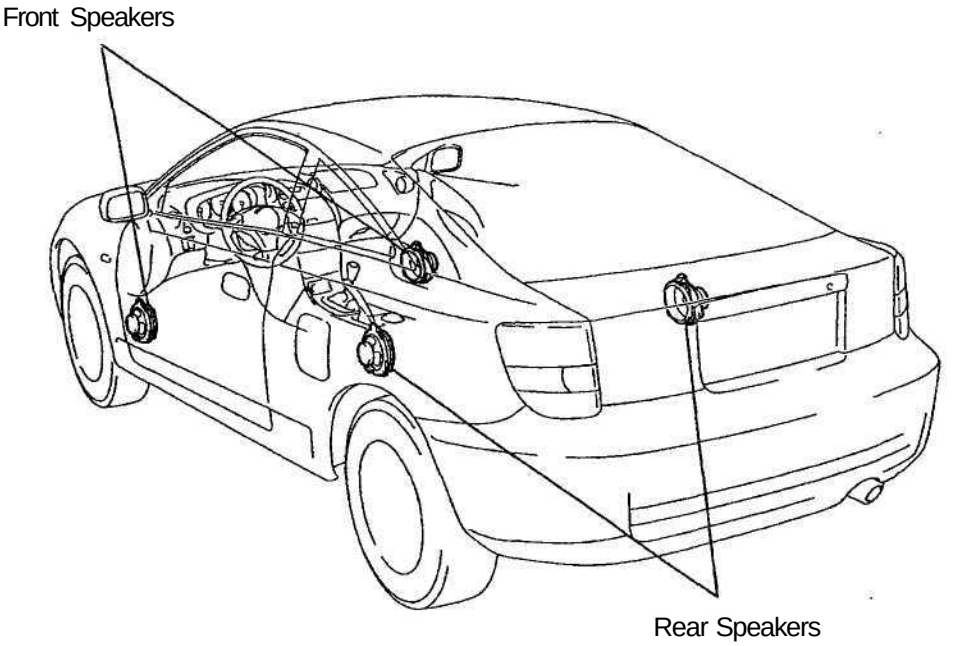

P

113595

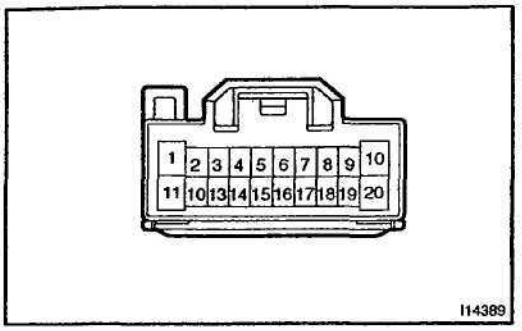

INSPECTION

1. 8 speaker type:

INSPECT RADIO RECEIVER ASSEMBLY CIRCUIT

Connect the connector from radio receiver assembly and inspect the connector on the wire harness side.

Tester connection	Condition	Specified condition
1 – Ground (+B)	Constant	Battery positive voltage
2 – Ground (ILL+)	Light control switch TAIL or HEAD	Battery positive voltage
3 – Ground (AMP+)	Radio power switch ON	Battery positive voltage
7 - Ground (MUTE)	Audio sounding	1 V or below
8 - Ground (FR)	Audio sounding	5 - 7 V
9 - Ground (FL)	Audio sounding	5 - 7 V
10 – Ground (SGD3)	Constant	Continuity
11 - Ground (ACC)	Ignition switch ACC	Battery positive voltage
16 – Ground (SGND)	Constant	Continuity
17 – Ground (BEEP)	Audio sounding	–
18 – Ground (RR)	Audio sounding	5 - 7 V
19 – Ground (RL)	Audio sounding	5 - 7 V
20 - Ground (GND)	Constant	Continuity

If the circuit is not as specified, inspect the circuits connected to other parts.

2. 4 speaker and 6 speaker type:
INSPECT RADIO RECEIVER ASSEMBLY CIRCUIT

Connect the connectors from the radio receiver assembly, and inspect the connector on the wire harness side.

Radio Receiver Side

Connector "A"

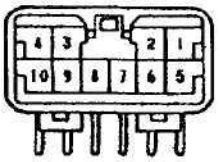

Connector "B"

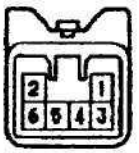

I12416

Tester connection	Condition	Specified condition
A1 - Ground (FR+)	Audio sounding	5-7V
A2 - Ground (FL+)	Audio sounding	5-7V
A3 - Ground (ACC)	Ignition switch ACC	Battery positive voltage
A4 - Ground (+B)	Constant	Battery positive voltage
A5 - Ground (FR–)	Audio sounding	5-7V
A6 - Ground (FL-)	Audio sounding	5-7V
A7 - Ground (E)	Constant	Continuity
A10 - Ground (ILL+)	Light control switch TAIL or HEAD	Battery positive voltage
B1 - Ground (RR+)	Audio sounding	5-7V
B2 - Ground (RL+)	Audio sounding	5-7V
B3 - Ground (RR–)	Audio sounding	5-7V
B6 - Ground (RL-)	Audio sounding	5-7V

If the circuit is not as specified, inspect the circuits connected to other parts.

ANTENNA

LOCATION

BE1DE-01

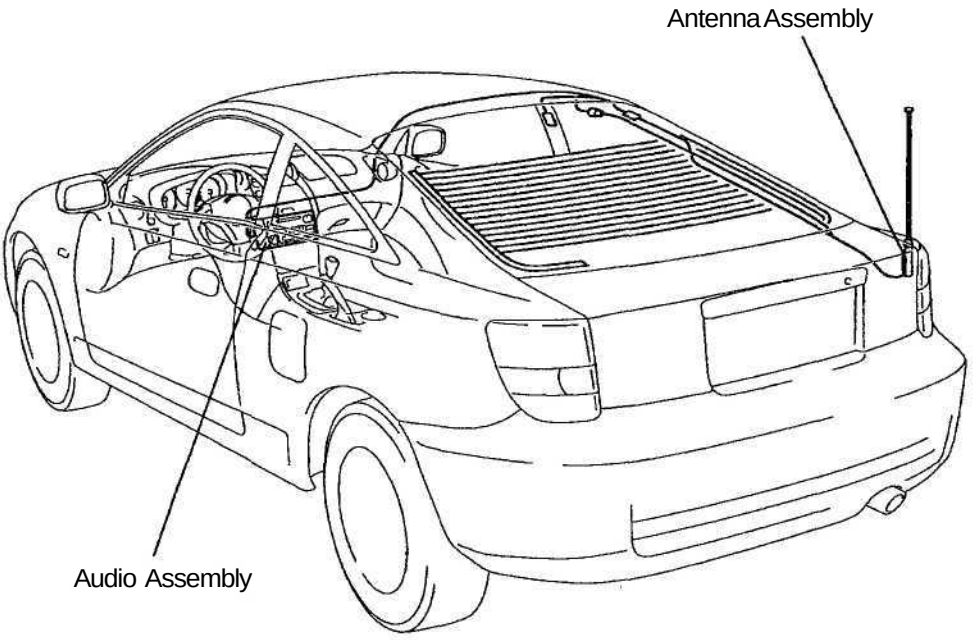

P

I13596

BE060-08

INSPECTION

1. GLASS PRINTED ANTENNA INSPECTION PROCEDURE

NOTICE:

- **When cleaning the glass, use soft dry cloth, and wipe the glass in the direction of the wire.**
  Take care not to damage the wires.
- **Do not use detergents or glass cleaners with abrasive ingredients.**

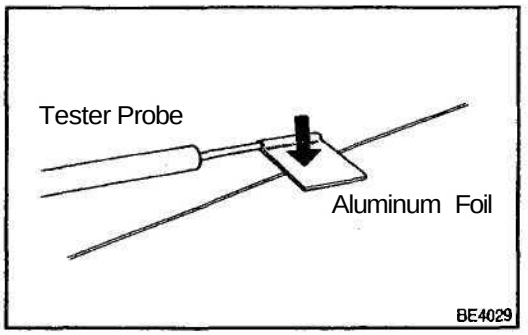

NOTICE:
In order not to damage the glass printed antenna, wrap up the tip of the tester stick with aluminum foil as shown in the illustration and check by holding the aluminum foil with a finger.

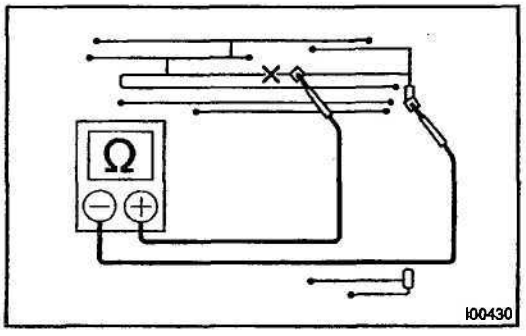

By placing and moving the tester stick along the glass printed antenna, check if continuity exists.

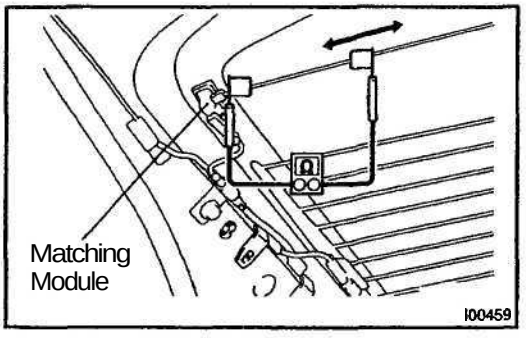

HINT:
Matching module is built in the bus bar of the glass printed antenna (main terminal side) of CELICA and no continuity exists between the terminal and the antenna. Therefore, for the continuity checking of the glass printed antenna on the main antenna side of CELICA, place one probe of the tester on the position beside the bus bar (position shown in the illustration) and check by making the other probe of the tester move along.

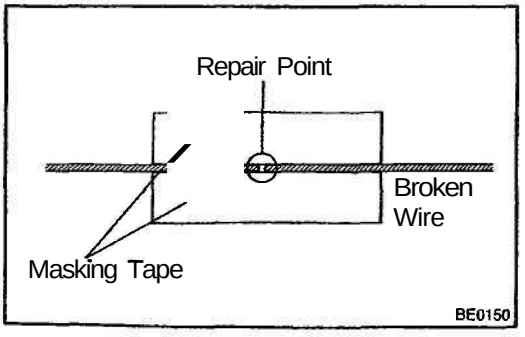

2. GLASS PRINTED ANTENNA REPAIR PROCEDURE

(a) Clean the broken wire tips with grease, wax and silicone remover.
(b) Place the masking tape along both sides of the wire for repair.
(c) Thoroughly mix the repair agent (Dupont paste No. 4817).

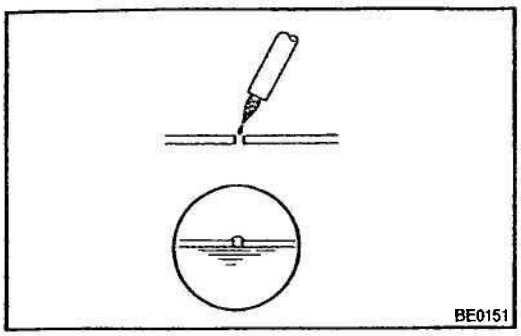

(d) Using a fine tip brush, apply a small amount of the agent to the wire.
(e) After a few minutes, remove the masking tape.

CLOCK

BEDG0-06

TROUBLESHOOTING

HINT:

Troubleshoot the clock according to the table below.

Troubleshooting	No.
Passenger seat belt warning light does not light up.	1
Clock will not operate	1
Clock loses or gains time	2

± 1.5 seconds / day

1. INSPECT CLOCK CIRCUIT

2. TROUBLESHOOTING NO.1

1	**PASSENGER SEAT BELT WARNING LIGHT DOES NOT OPERATE**
	CLOCK WILL NOT OPERATE

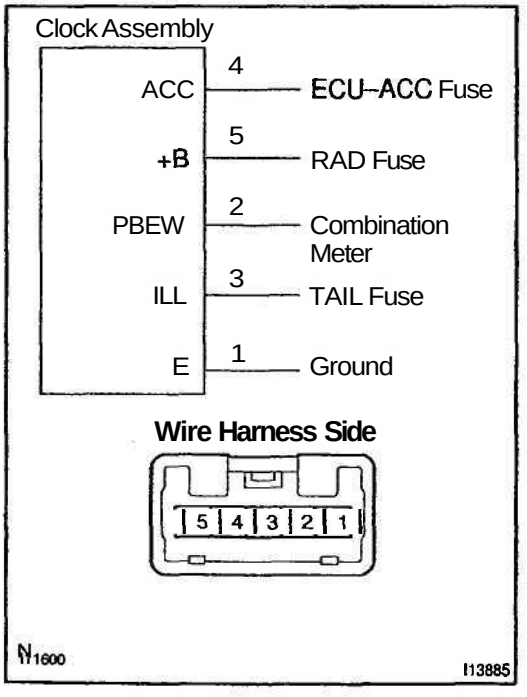

(a) Turn ignition switch ON.

(b) Check that the battery positive voltage is 10 – 16 V.

If voltage is not as specified, replace the battery.

(c) Check that the RAD and ECU–ACC fuses are not blown.

If the fuse is blown, replace the fuse and check for short.

(d) Troubleshoot the clock as follows.

HINT:

Inspect the connector on the wire harness side.

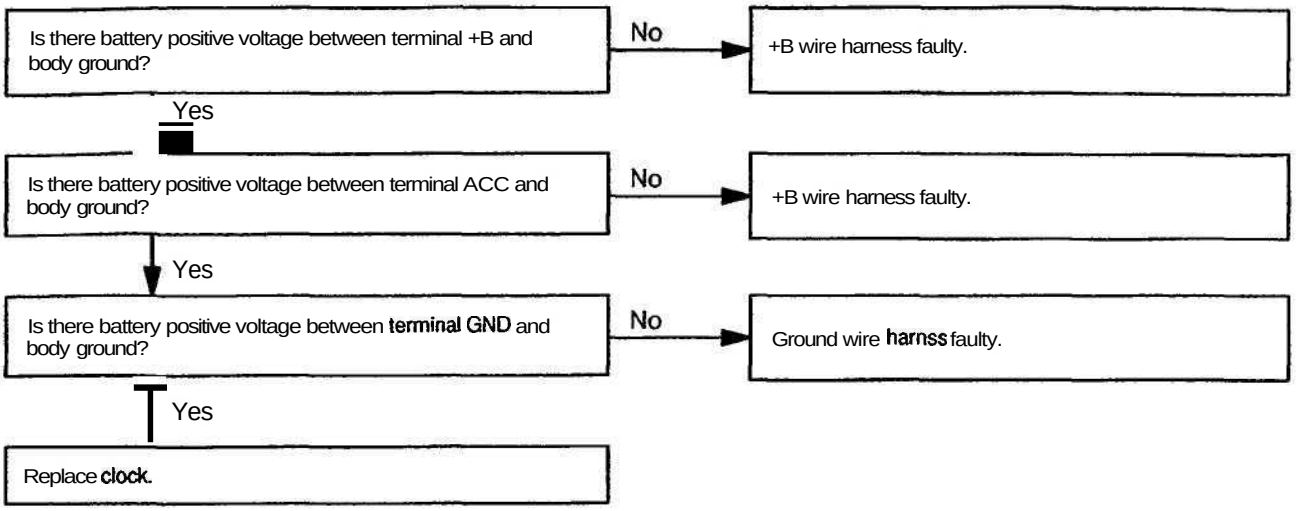

3. TROUBLESHOOTING NO.2

2	**CLOCK LOSES OR GAINS TIME**

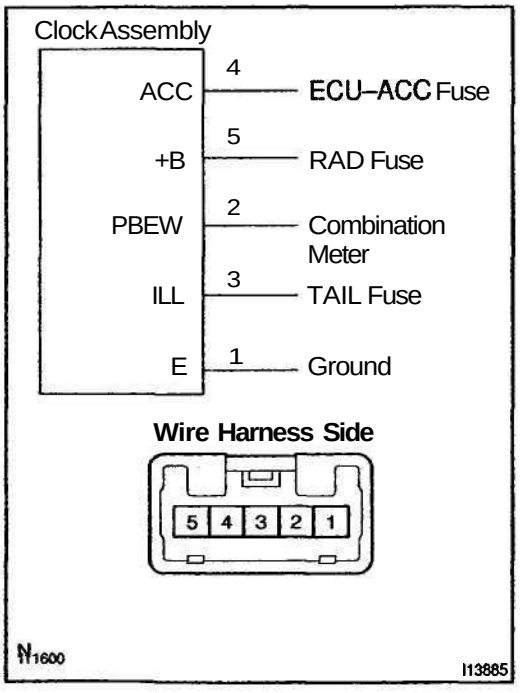

(a) Turn ignition switch ON.

(b) Check that the battery positive voltage is 10 - 16 V.

If voltage is not as specified, replace the battery.

(c) Inspect the error of the clock.

Allowable error (per day): ± 1.5 seconds

If the error exceeds the allowable error, replace the clock.

(d) Check that the clock adjusting button is sticking in position and has failed to return.

If the error exceeds the allowable error, replace the clock.

(e) Troubleshoot the clock as follows.

HINT:

Inspect the connector on the wire harness side.

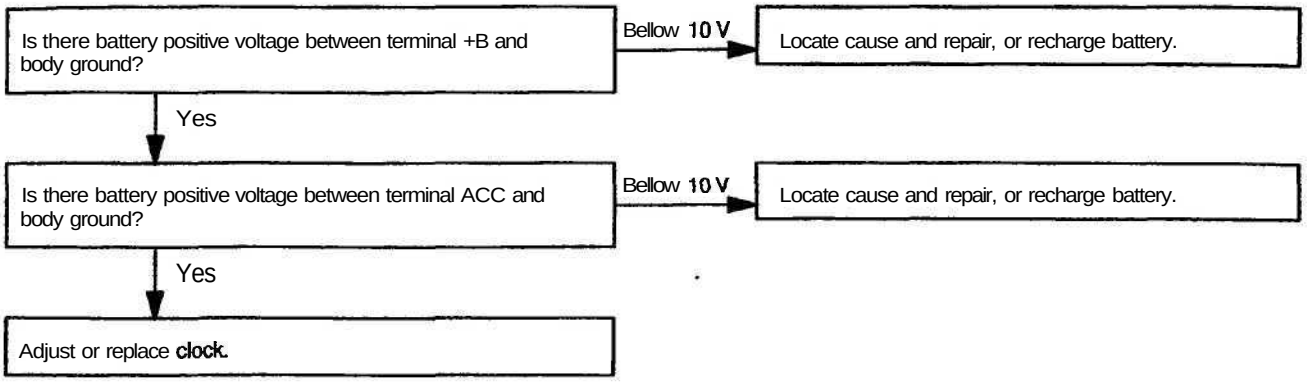
Is there battery positive voltage between terminal +B and body ground?
Bellow 10 V
Locate cause and repair, or recharge battery.
Yes
Is there battery positive voltage between terminal ACC and body ground?
Bellow 10 V
Locate cause and repair, or recharge battery.
Yes
Adjust or replace clock.

HORN SYSTEM

LOCATION

BEDFY-16

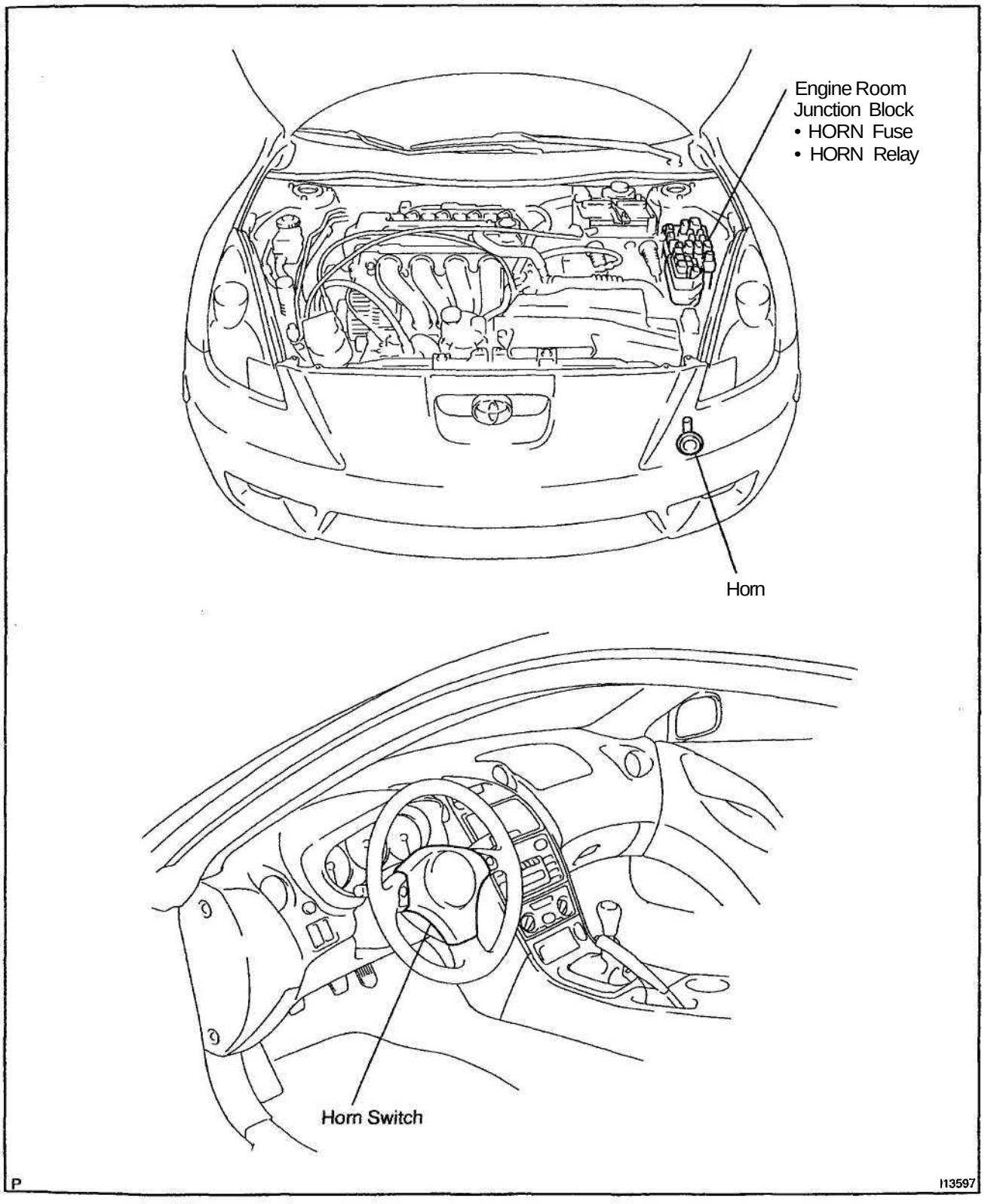

BE0FZ-09

INSPECTION

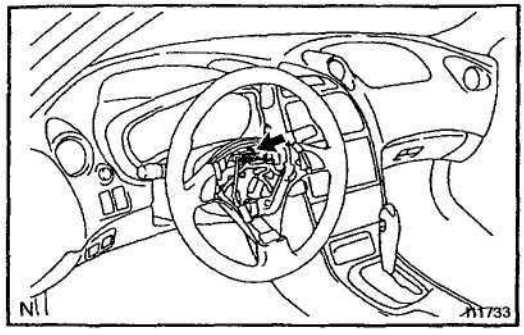

1. INSPECT HORN SWITCH

(a) Disconnect the negative (-) terminal from the battery.
(b) Remove the left and right covers from the steering wheel.
(c) Using a torx socket wrench, loosen the 2 bolts.
(d) Pull up the horn pad and place it on the steering column, as shown.

HINT:
Do not disconnect the connector from the horn pad.

(e) Disconnect the connector from the slip ring.

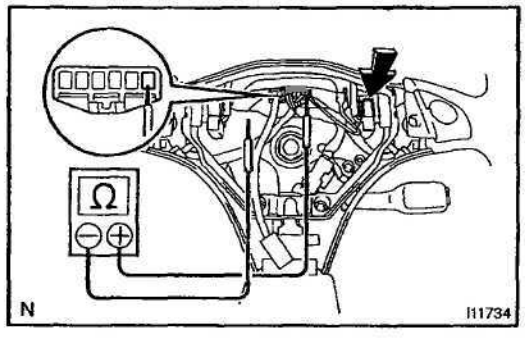

(f) Check that no continuity exists between terminal 6 of the connector and body ground.
(g) Check that continuity exists between terminal 6 of the connector and body ground when the horn contact plate is pressed against the steering spoke assembly.

If continuity is not as specified, repair or replace the steering wheel or wire harness as necessary.

(h) Install the horn pad in place and using a torx socket wrench, torque the 2 bolts.
Torque: 7.1 N-m (72 kgf-cm, 62 in.-lbf)
(i) Install the left and right covers.
G) Connect the negative (-) terminal to the battery.

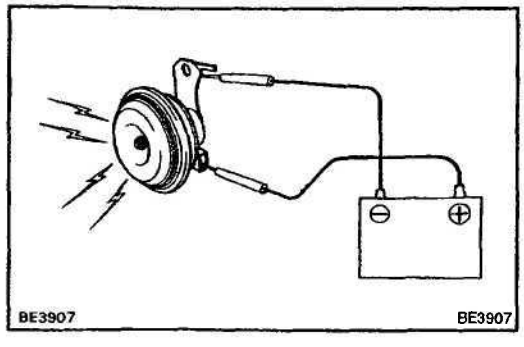

2. INSPECT HORN OPERATION

Connect the positive (+) lead from the battery to the terminal and negative (-) lead to the horn body and check that the horn blows.

If operation is not as specified, replace the horn.

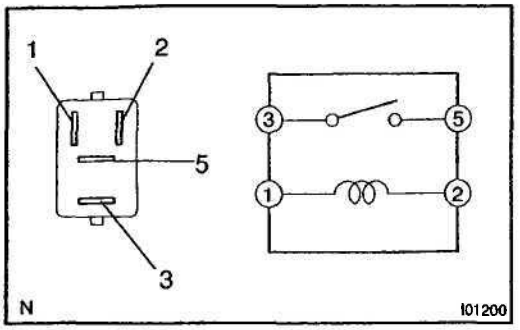

3. INSPECT HORN RELAY CONTINUITY

Condition	Tester connection	Specified condition
Constant	1 -2	Continuity
Apply B+ between terminals 1 and 2.	3-5	Continuity

If continuity is not as specified, replace the relay.

-MEMO-

BODY

CLIP BO–1
SRS AIRBAG BO–3
FRONT BUMPER BO–4
REAR BUMPER BO–5
HEADLIGHT BO–6
HOOD BO–9
FRONT DOOR BO–10
BACK DOOR BO–22
BACK DOOR STAY BO–27
FRONT WIPER AND WASHER BO–28
REAR WIPER AND WASHER BO–33
ROOF DRIP SIDE MOULDING BO–38
ROOF SIDE MOULDING BO–42
SIDE MUD GUARD BO–46
WINDSHIELD BO–47
QUARTER WINDOW GLASS BO–55
BACK DOOR GLASS BO–64
SLIDING ROOF BO–69
INSTRUMENT PANEL BO–76
ROOF HEADLINING BO–86
FRONT SEAT BO–92
REAR SEAT BO–101
SEAT BELT BO–106
SEAT BELT PRETENSIONER BO–109

BO

CLIP

REPLACEMENT

BO0ZO-03

The removal and installation methods of typical clips used in body parts are shown in the table below.
HINT:
If the clip is damaged during the operation, always replace it with a new clip.

Shape (Example)	Removal/Installation
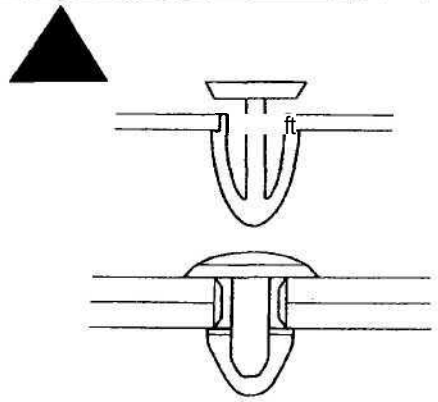	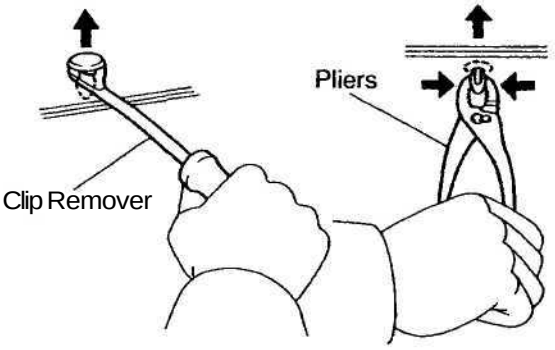
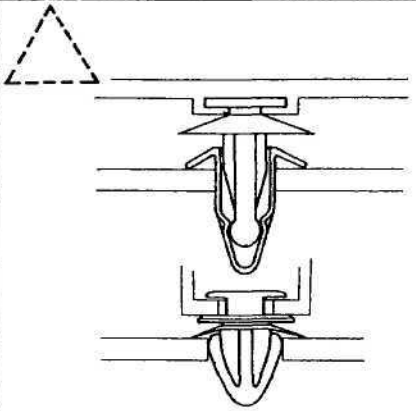	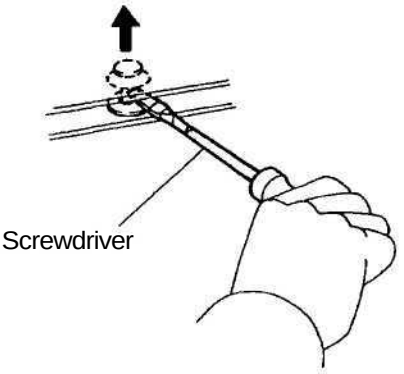
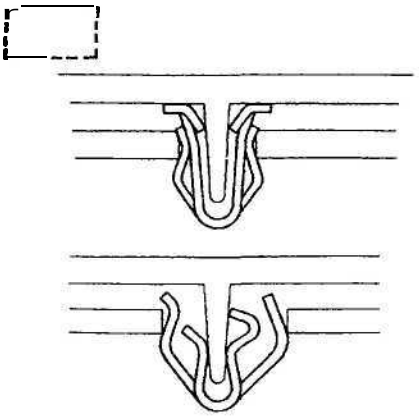	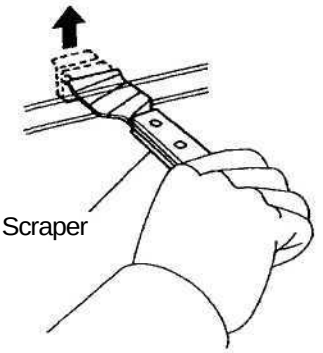

V00005

Shape (Example)	Removal/Installation
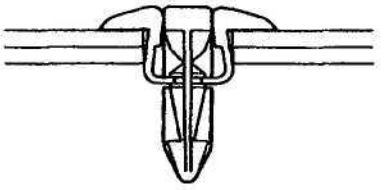	Removal Installation 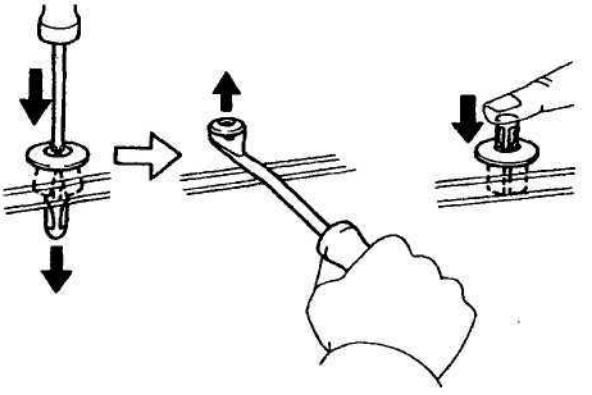
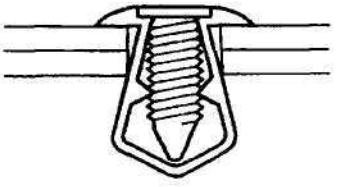	Removal Installation 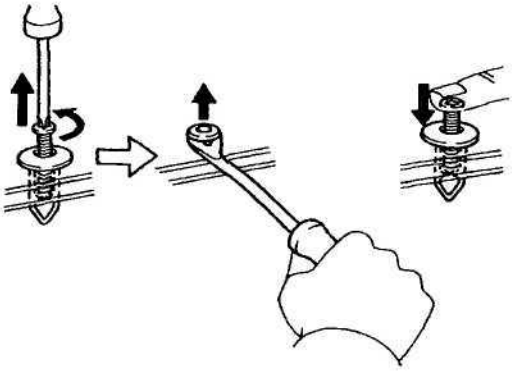

V00012

SRS AIRBAG

PRECAUTION

B00ZP-03

The CELICA is equipped with an SRS (Supplemental Restraint System) such as the driver airbag, front passenger airbag, side airbag and seat belt pretensioner. Failure to carry out service operation in the correct sequence could cause the SRS to unexpectedly deploy during servicing, possibly leading to a serious accident. Before servicing (including removal or installation of parts, inspection or replacement), be sure to read the precautionary notices in the RS section.

FRONT BUMPER

COMPONENTS

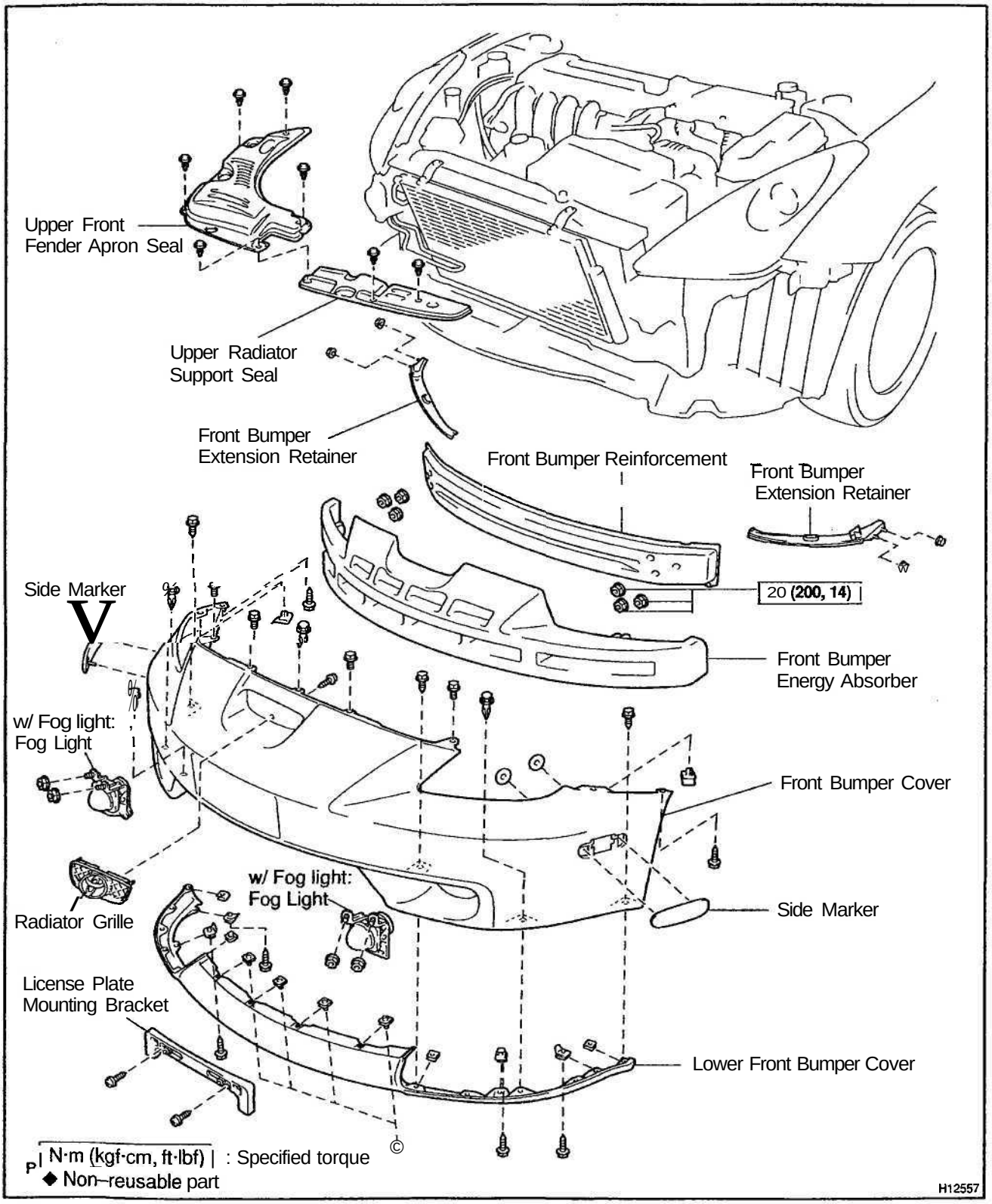

BO

REAR BUMPER

COMPONENTS

BO1DH-02

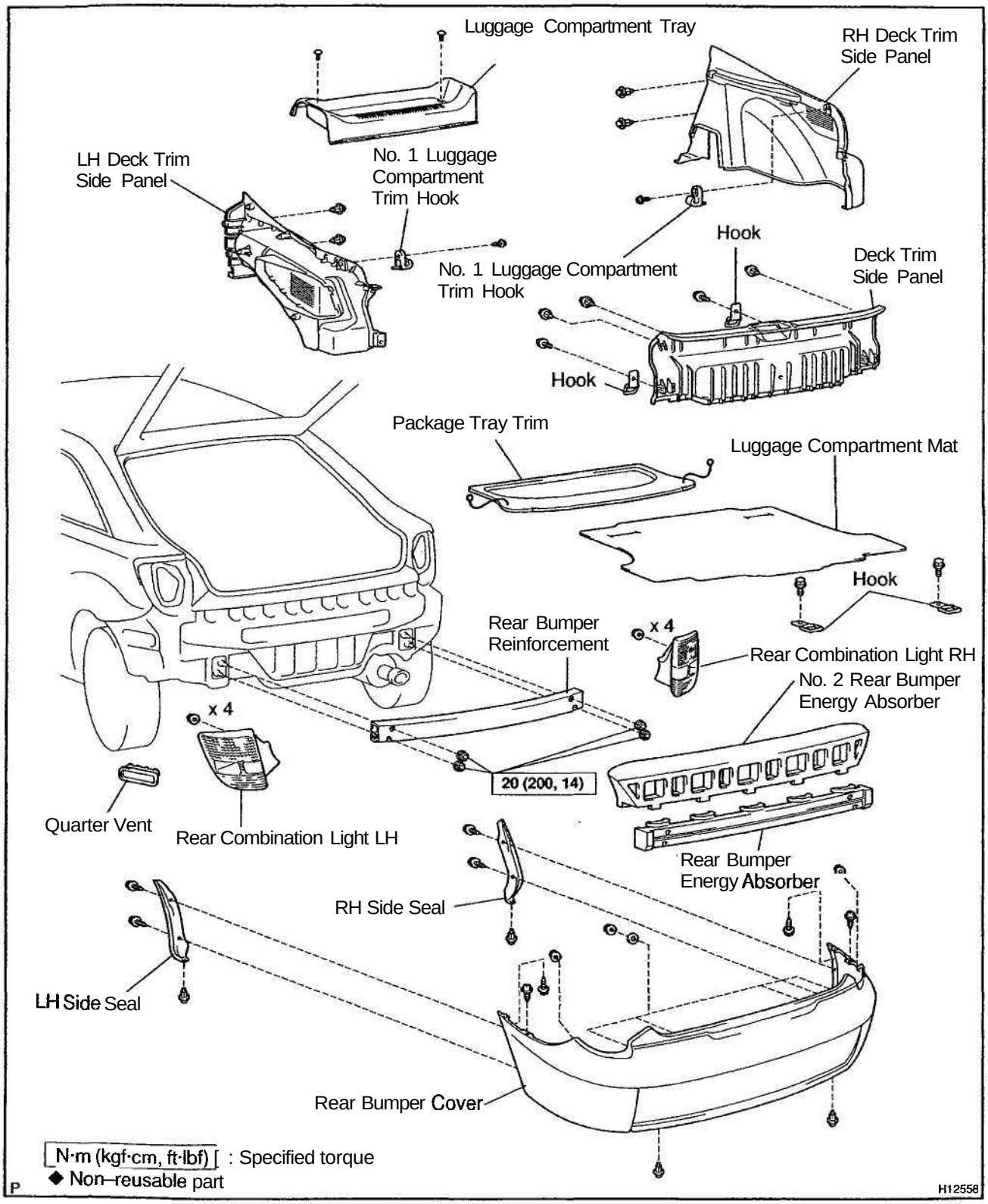

BO

HEADLIGHT

COMPONENTS

BO2NS-01

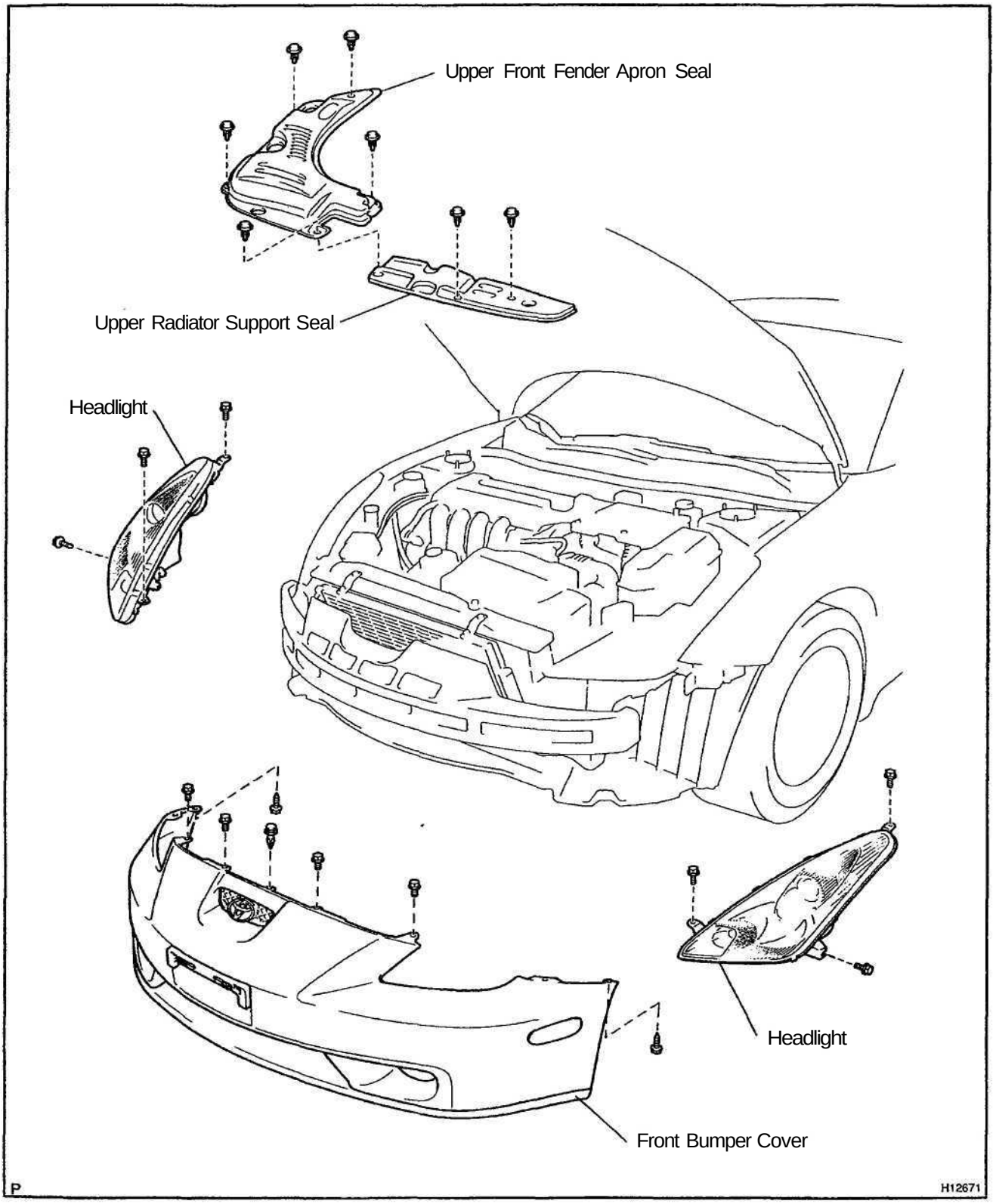

B02NC-01

REMOVAL

1. REMOVE UPPER FRONT FENDER APRON SEAL
2. REMOVE UPPER RADIATOR SUPPORT SEAL
3. REMOVE FRONT BUMPER COVER
(See page BO–4)

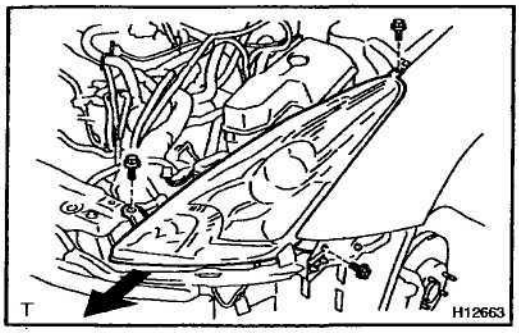

4. REMOVE HEADLIGHT

(a) Remove the 3 bolts.

(b) Disconnect the connectors, then remove the headlight as shown in the illustration.

(c) Employ the same manner described above to the other side.

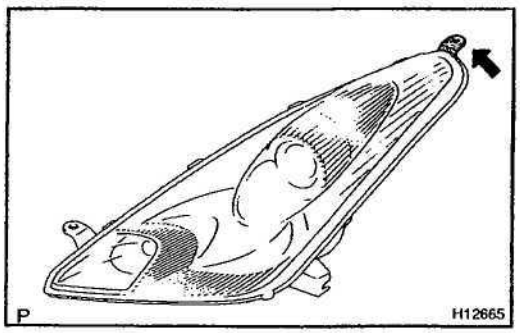

HINT:

At the time of installation, please refer to the following item.

If the shown part of the headlight is damaged, the headlight can be reinstalled to the body by installing a bracket to it.

INSTALLATION

Installation is in the reverse order of removal (See page BO-6).

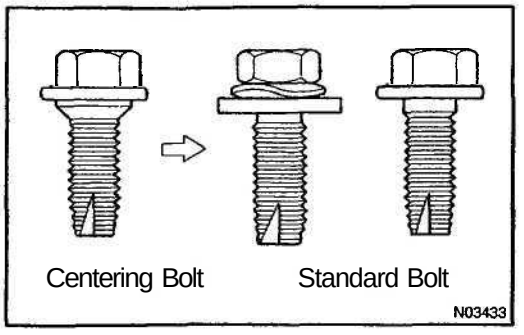

HOOD

ADJUSTMENT

BO2NE-01

HINT:

Since the centering bolt is used as the hood hinge and lock set bolt, the hood cannot be adjusted with it on. Substitute the standard bolt for the centering bolt.

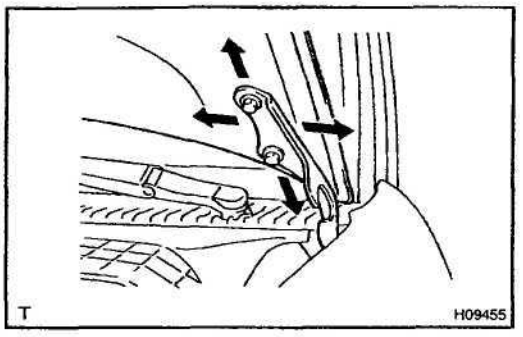

1. ADJUST HOOD IN FORWARD/REARWARD AND LEFT/LIGHT DIRECTIONS

(a) Adjust the hood by loosening the hood side hinge bolts.

(b) Tighten the loosened bolts again.

Torque: 13 N m (130 kgf·cm, 9 ft·lbf)

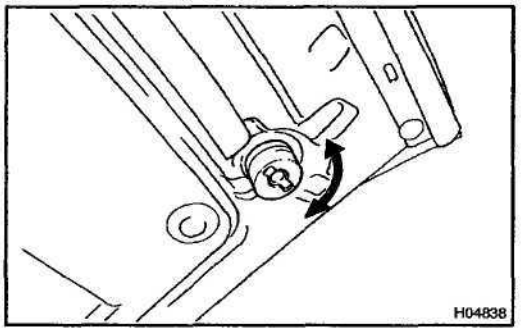

2. ADJUST FRONT EDGE OF HOOD IN VERTICAL DIRECTION

Adjust the hood by turning the cushions.

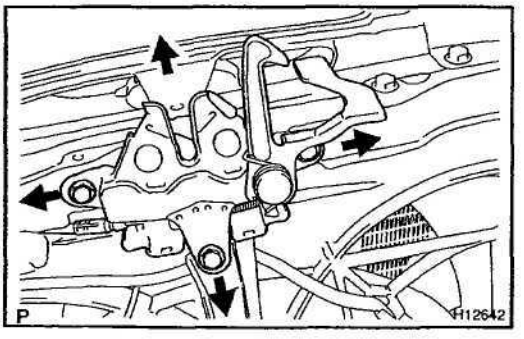

3. ADJUST HOOD LOCK

(a) Remove the upper front fender opron seal.

(b) Remove the upper radiator support seal.

(c) Remove the radiator reservoir.

(d) Adjust the hood lock by loosening the bolts.

(e) Tighten the loosened bolts again.

Torque: 6.9 N·m (70 kgf·cm, 61 in.·lbf)

(f) Reinstall the removed parts.

FRONT DOOR

COMPONENTS

BO1DJ-02

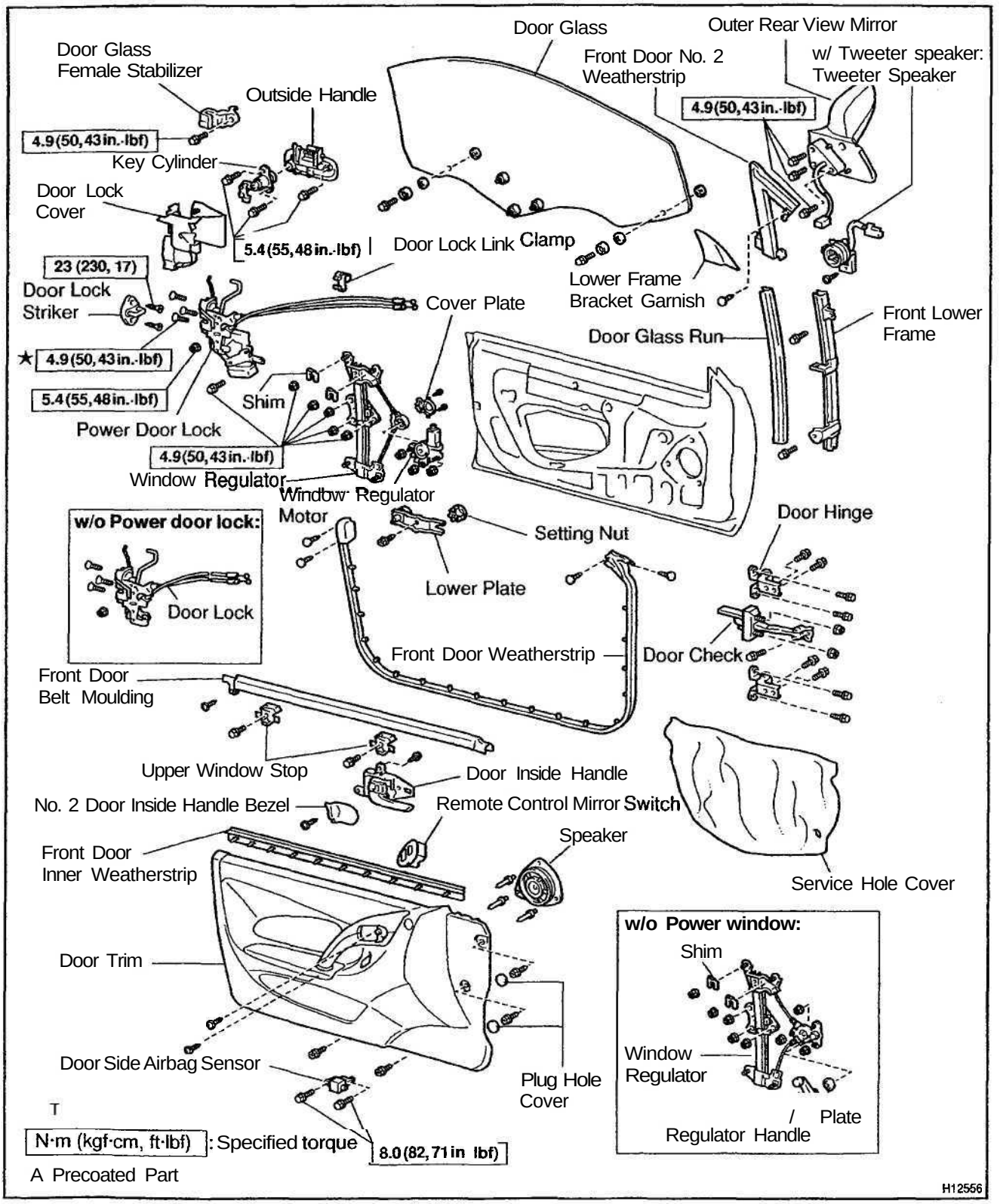

BO

BO2DJ-01

DISASSEMBLY

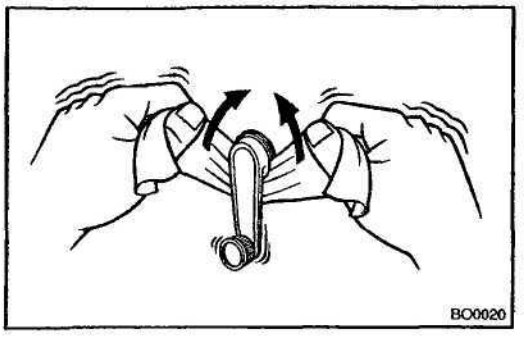

1. w/o Power window:

REMOVE REGULATOR HANDLE

Pull off the snap ring with a shop rag and remove the regulator handle and plate.

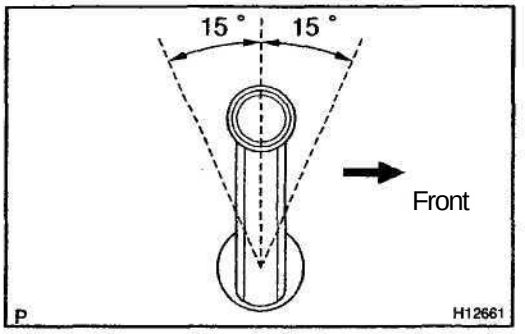

HINT:

- At the time of reassembly, please refer to the following item.
- With door window fully closed, install the plate and regulator handle with the snap ring in the position within ± 15° as shown in the illustration.

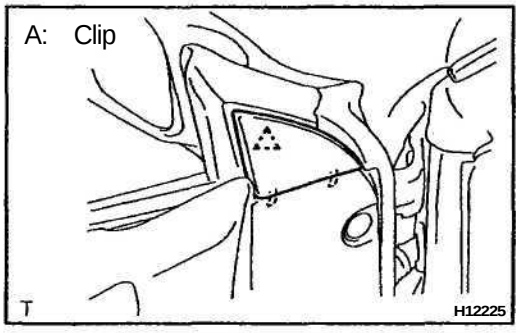

2. REMOVE LOWER FRAME BRACKET GARNISH

Using a screwdriver, remove the lower frame bracket garnish.

HINT:

Tape the screwdriver tip before use.

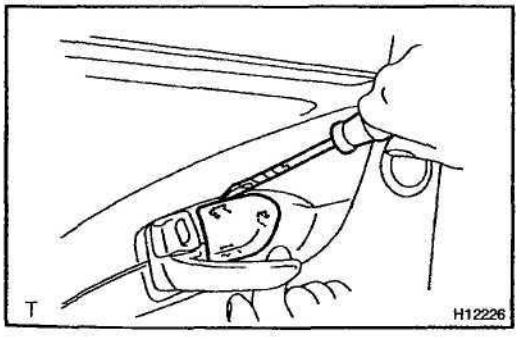

3. REMOVE NO. 2 DOOR INSIDE HANDLE BEZEL

Using a screwdriver, remove the No. 2 door inside handle bezel.

HINT:

Tape the screwdriver tip before use.

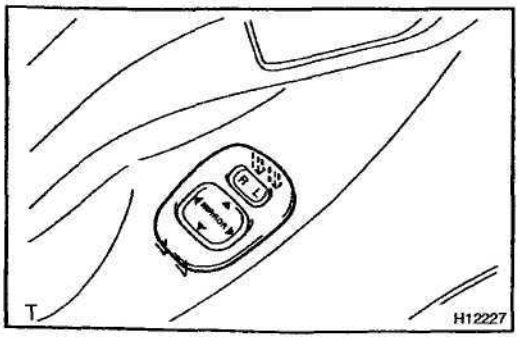

4. REMOVE REMOTE CONTROL MIRROR SWITCH

Using a screwdriver, remove the remote control mirror switch, then disconnect the connector.

HINT:

Tape the screwdriver tip before use.

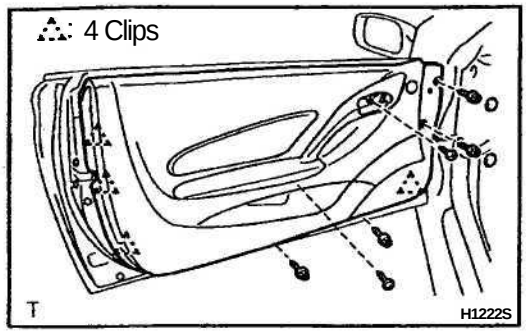

5. REMOVE DOOR TRIM

(a) Using a screwdriver, remove the 2 plug hole covers.

HINT:

Tape the screwdriver tip before use.

(b) Remove the 6 screws.

(c) Insert a screwdriver between the door panel and door trim to pry the trim out.

HINT:

Tape the screwdriver tip before use.

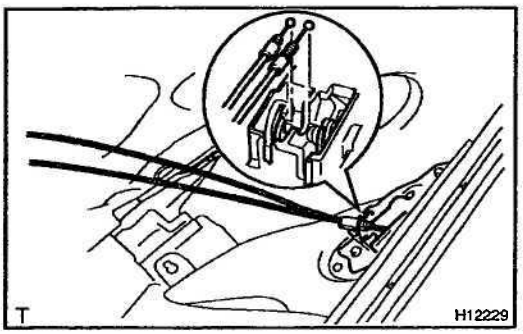

(d) Pull the trim upward to remove it, then disconnect the locking cable and open cable from the door inside handle.

HINT:

- At the time of reassembly, please refer to the following items.
- Check that a ball at the end of the locking cable is pressed. (The cable should be locked.)
- Turn the locking knob of the inside handle fully to the lock side and install the locking cable.

(e) Remove the screw and door inside handle from the door trim.

(f) Using a screwdriver, remove the front door inner weather-strip from the door trim.

6. REMOVE DOOR SIDE AIRBAG SENSOR

NOTICE:

- **If the wiring connector of the SRS is disconnected with the ignition switch in ON or ACC position, DTCs will be recorded.**
- **Never use SRS parts removed from another vehicle. When replacing parts, replace them with new ones.**
- **Never reuse the sensor involved in a collision where the SRS has deployed.**
- **Never repair a sensor in order to reuse it.**

Disconnect the connector, then remove the 2 bolts and door side airbag sensor.

Torque: 8.0 N·m (82 kgf·cm, 71 in.·lbf)

NOTICE:

- **At the time of reassembly, please refer to the following items.**
- **Make sure the sensor is installed in the specified torque.**
- **If the sensor has been dropped, or there are cracks, dents or any other defects are identified in the case, brackets or connector, replace the sensor. Always replace the set bolts with new ones.**
- **The sensor set bolts have been anti-rust treated. When the sensor is removed, always replace the set bolts with new ones.**
- **After installation, shake the sensor to check that there is no looseness.**

- **The sensor is equipped with an electrical connection check mechanism. Be sure to lock this mechanism securely when connecting the connector. If not, a malfunction code may be detected by the diagnostic system.**

7. REMOVE OUTSIDE REAR VIEW MIRROR
Torque: 8.3 N·m (85 kgf·cm, 74 in.·lbf)

8. w/ Tweeter speaker:
REMOVE TWEETER SPEAKER

9. REMOVE SERVICE HOLE COVER

NOTICE:
Do not tear the cover.

HINT:

- At the time of reassembly, please refer to the following item.
- Bring out the 2 cables and wire harness through the slits of service hole cover.

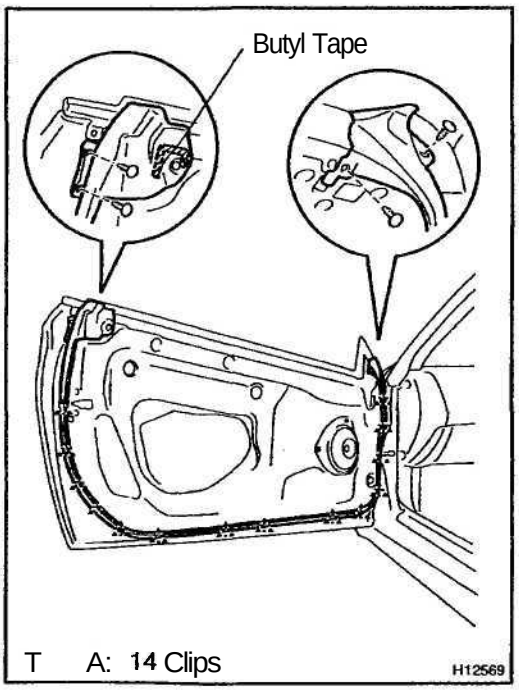

10. REMOVE FRONT DOOR WEATHERSTRIP

(a) Using a clip remover, remove the 4 clips.

HINT:

Tape the screwdriver tip before use.

(b) Using a clip remover, remove the front door weatherstrip.

HINT:

Tape the screwdriver tip before use.

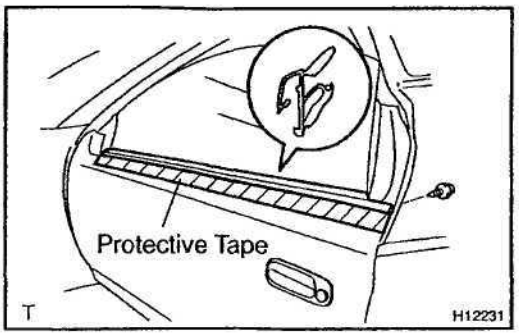

11. REMOVE FRONT DOOR BELT MOULDING

(a) Remove the screw.

(b) Using a moulding remover, remove the front door belt moulding.

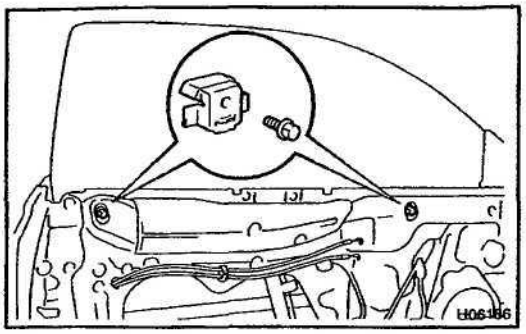

12. REMOVE UPPER WINDOW STOPS

Remove the 2 bolts and 2 upper window stops.

Torque: 11 N·m (115 kgf·cm, 8 ft·lbf)

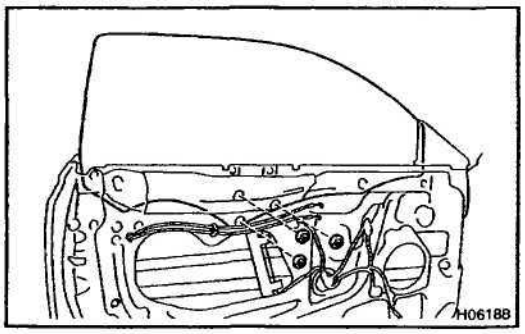

13. REMOVE DOOR GLASS

(a) Close the door glass until the nuts appear in the service hole.

(b) Remove the 3 nuts.

Torque: 7.8 N·m (80 kgf·cm, 69 in.·lbf)

(c) Take the door glass out of the panel carefully.

NOTICE:

Be careful not to drop the door glass.

HINT:

- At the time of reassembly, please refer to the following item.
- Insert a shop rag inside the panel to prevent the glass from being scratched.

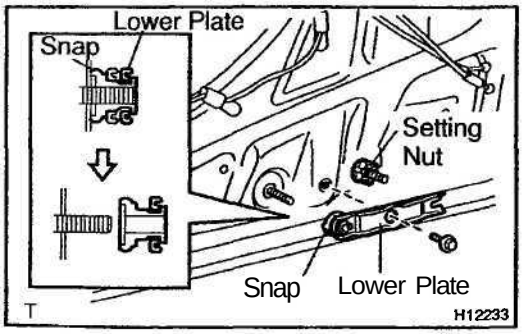

14. REMOVE WINDOW REGULATOR

(a) Remove the bolt of lower plate.

Torque: 4.9 N·m (50 kgf·cm, 43 in.·lbf)

(b) Unlock the snap by pulling the lower plate.

(c) Remove the snap and lower plate from the stud bolt of lower bracket.

(d) Remove the setting nut.

(e) w/ Power window:
Disconnect the connector.

(f) Remove the 5 nuts and window regulator.

Torque: 8.3 N·m (85 kgf·cm, 74 in.·lbf)

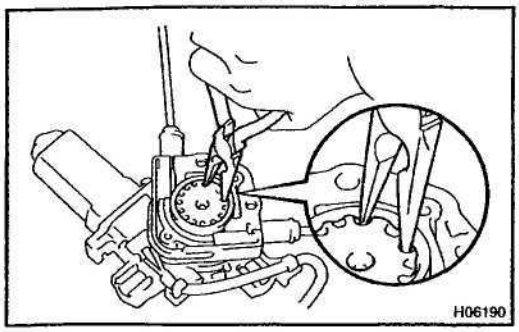

15. w/ Power window:
If replacing the window regulator:
REMOVE WINDOW REGULATOR FROM MOTOR
(a) Remove the 2 screws and cover plate.
(b) Using needle nose pliers, remove the drum and wire guide from the motor.

NOTICE:
Do not use a screwdriver etc. to remove them.

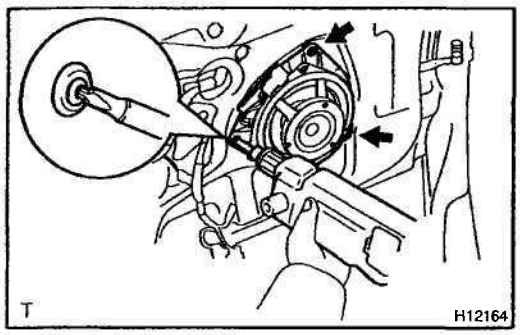

16. REMOVE SPEAKER
(a) Using a rivet cutter and drill, drill out the rivets and remove the speaker.

HINT:
Even if flanges are taken off, continue drilling and push out remaining flangments with the drill.
(b) Disconnect the connector.
(c) Using a vacuum cleaner, remove the drilled rivets and the associated metallic dust from the inside of the door panel.

CAUTION:
Do not touch the cut rivets and rivet cutter as they will be not.

NOTICE:
- **Do not jiggle the rivet cutter while cutting.**
- **Otherwise you may enlarge the rivet hole or damage the rivet cutter.**

HINT:
Do not drill the door inner hole.

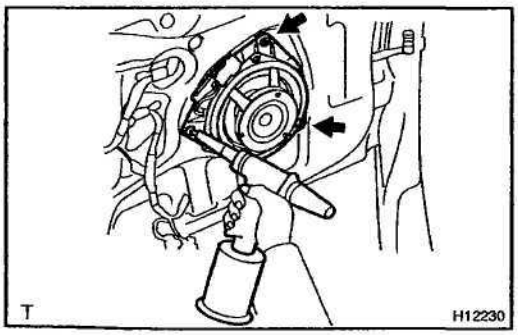

HINT:
At the time of reassembly, please refer to the following item.
Using an air riveter, strike rivets into the door panel to install the speaker to the door panel.

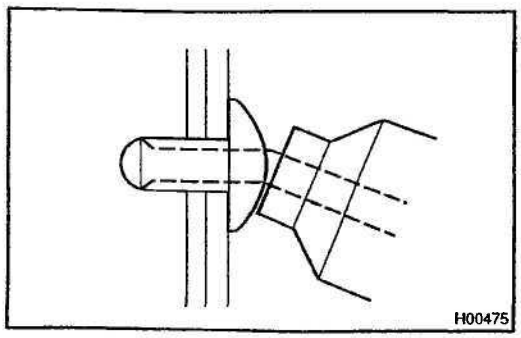

NOTICE:
At the time of reassembly, please refer to the following item.
if the rivets are not positioned perpendicular to the assembled surface the mandrel will be bent. If the trigger is pulled in this condition, the air riveter may be also damaged.

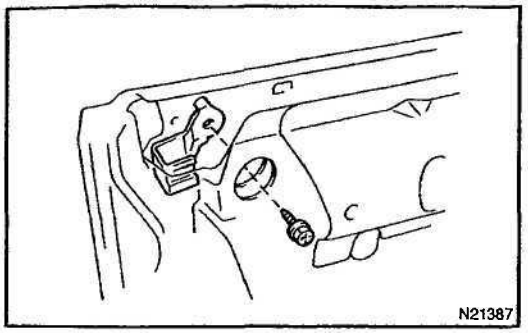

17. REMOVE DOOR GLASS FEMALE STABILIZER

Remove the screw and door glass female stabilizer.

Torque: 4.9 N·m (50 kgf·cm, 43 in.·lbf)

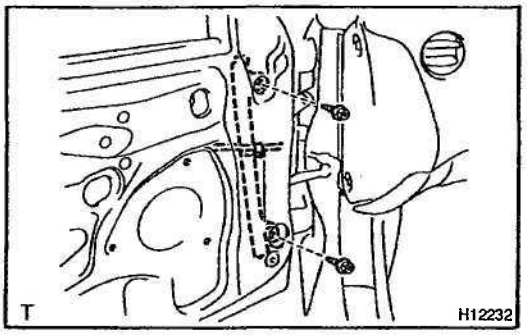

18. REMOVE FRONT LOWER FRAME

(a) Remove the 2 screws.

(b) Disengage the clamp of door wire harness from the front lower frame.

(c) Remove the front lower frame through the service hole.

(d) Remove the door glass run from the lower frame.

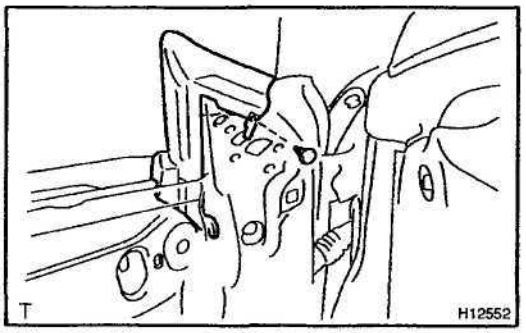

19. REMOVE FRONT DOOR NO. 2 WEATHERSTRIP

(a) Using a clip remover, remove the clip.

(b) Remove the front door No. 2 weatherstrip.

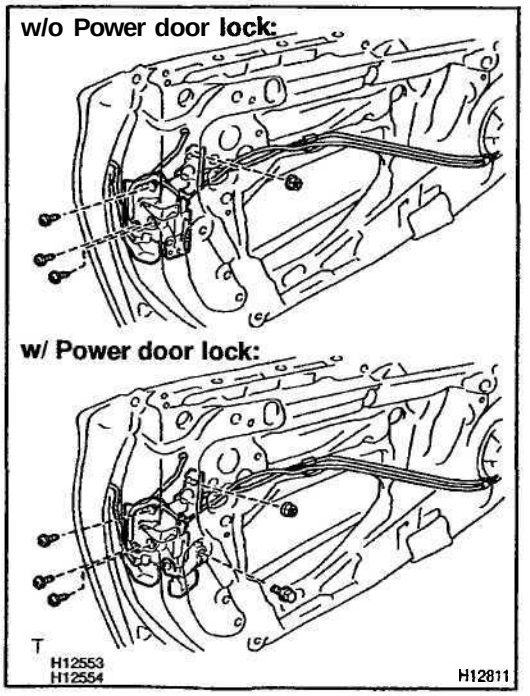

20. REMOVE DOOR LOCK

(a) Disconnect the 2 links from the outside handle and key cylinder.

(b) w/o Power door lock:
Remove the nut and 3 screws.
Torque:
Nut: 5.4 N·m (55 kgf cm, 48 in.·lbf)
Screw: 4.9 N·m (50 kgf·cm, 43 in.·lbf)

(c) w/ Power door lock:
Disconnect the connector and remove the bolt, nut and 3 screws.
Torque:
Nut: 5.4 N·m (55 kgf·cm, 48 in.·lbf)
Bolt, Screw: 4.9 N·m (50 kgf·cm, 43 in.·lbf)

HINT:

- At the time of reassembly, please refer to the following item.
- Apply adhesive to 3 screws.
  Part No. 08833–00070, THREE BOND 1324 or equivalent

(d) Remove the door lock through the service hole.
(e) Remove the door lock link clamp.

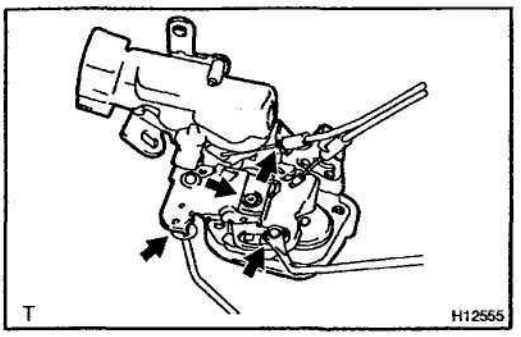

HINT:

- At the time of reassembly, please refer to the following item.
- Apply MP grease to the sliding and rotating parts of the door lock.

21. REMOVE OUTSIDE HANDLE

(a) Remove the 2 bolts and outside handle with key cylinder.
Torque: 5.4 N·m (55 kgf cm, 48 in.·lbf)
(b) Remove the bolt and key cylinder from the outside handle.
Torque: 5.4 N·m (55 kgf·cm, 48 in.·lbf)

BO1DL-02

INSPECTION

INSPECT FRONT DOOR GLASS

Check the following. If the conditions are not met, readjust the glass.

(1) When you close the door with the glass fully closed, the a-a, b–b, c–c sections are in the same condition as shown in the illustration.

(2) When you close the door with the glass fully closed, check that the weatherstrip is not pinched and that the door glass is not in contact with the roof drip moulding.

(3) When the door glass is fully closed, check that the outside edge of the door glass is in contact with the weatherstrip at the front pillar and roof side and that the edge of the glass cannot be seen.

(4) Check that the door glass is not loose when it is half open.

(5) When the door glass is rising up, check that the door glass and roof side weatherstrip are parallel and that the door glass contacts the 2 upper stops.

(6) Check that the door glass moves up and down smoothly over all areas.

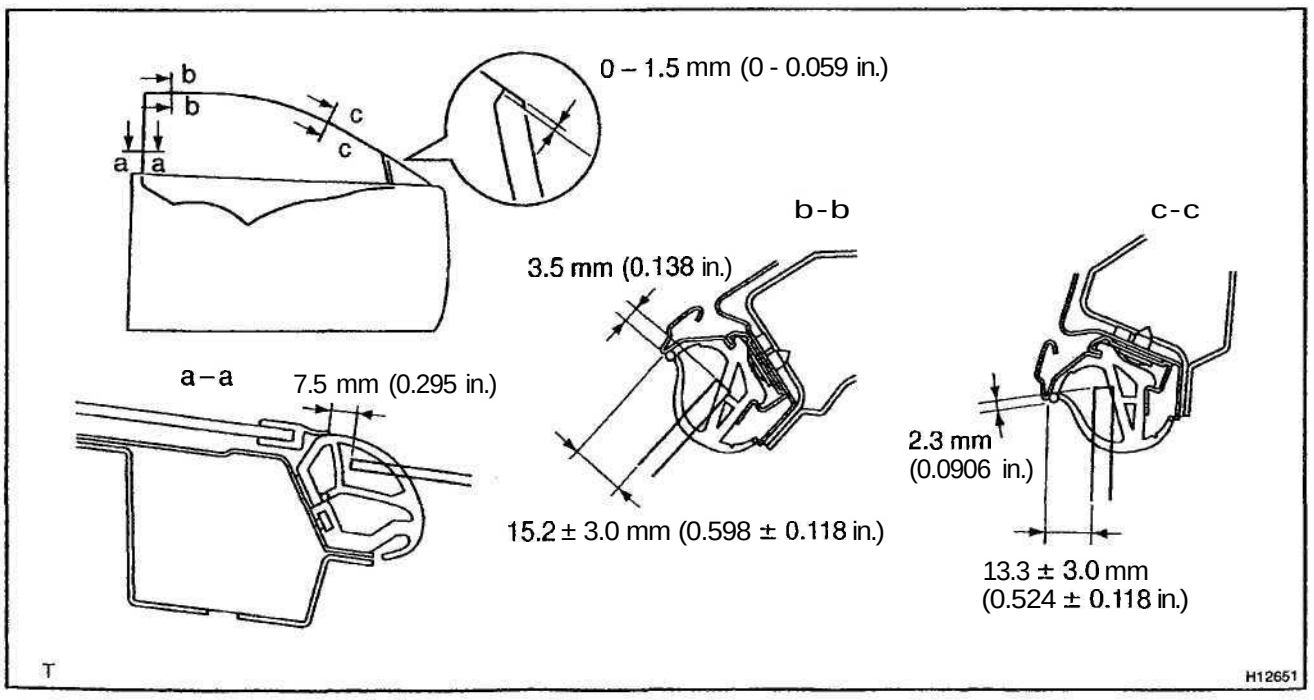

BO1DM-02

ADJUSTMENT

1. FRONT DOOR ADJUSTMENT

HINT:

Since the centering bolt is used as the door side hinge bolt, the door hinge cannot be adjusted with it on. Substitute the bolt with washer for the centering bolt.

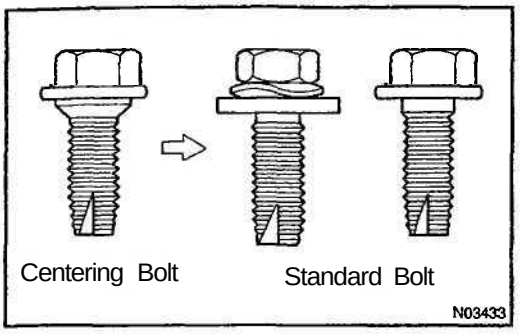

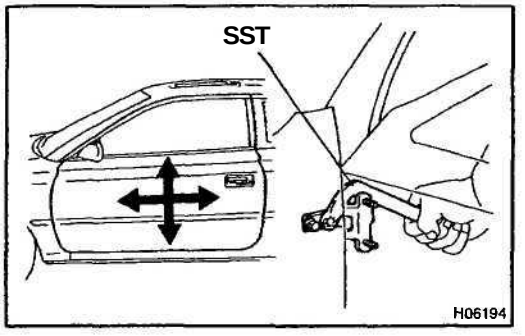

(a) Adjust the front door in forward/rearward and vertical directions.
Using SST, adjust the door by loosening the body side hinge bolts.
SST 09812–00010
Torque: 25 N·m (260 kgf·cm, 19 ft·lbf)

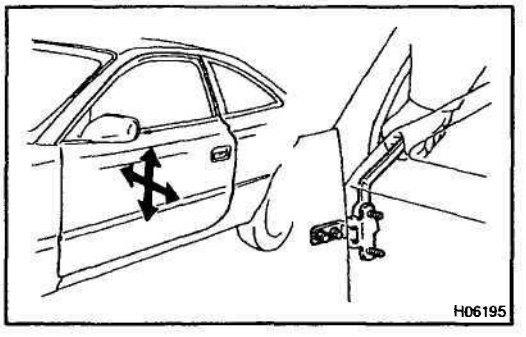

(b) Adjust the front door in left/right and vertical directions.
Adjust the door by loosening the door side hinge bolts.
Torque: 25 N·m (260 kgf·cm, 19 ft·lbf)

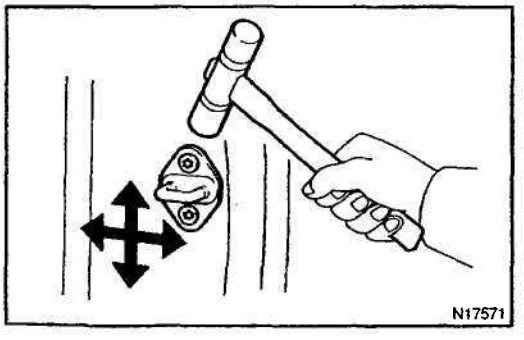

(c) Adjust front door lock striker.
(1) Check that the door fit and door lock linkages are adjusted correctly.
(2) Adjust the striker position by slightly loosening the striker mounting screws and hitting the striker with a hammer.
(3) Tighten the striker mounting screws again.
Torque: 23 N·m (230 kgf·cm, 17 ft·lbf)

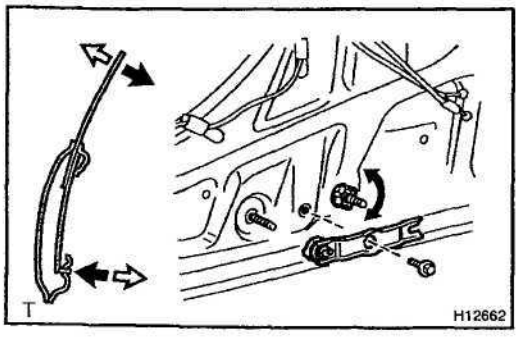

2. ADJUST FRONT DOOR GLASS

(a) Adjust the upper part of the glass inward/outward.
(1) Remove the bolt and lower plate.
(2) Pull the lower plate so that the snap is unlocked.
(3) Remove the snap and lower plate.
(4) Adjust the glass by turning the setting nut.
(5) Reinstall the lower plate, snap and bolt.
Torque: 4.9 N·m (50 kgf·cm, 43 in.·lbf)

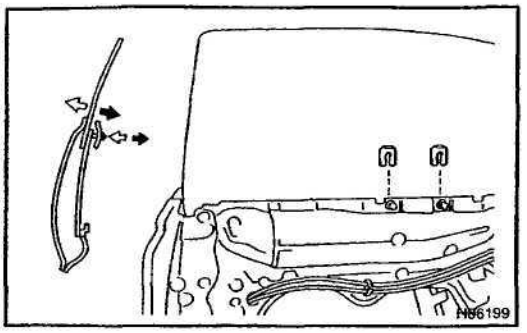

(b) Adjust the lower part of the glass inward/outward.
(1) Loosen the 2 nuts on the top of the window regulator.
(2) Insert the shim to adjust the glass position (inside/outside).

Shim thickness:
1.0 mm (0.039 in.)
2.0 mm (0.079 in.)

(3) Tighten the nuts.

Torque: 8.3 N·m (85 kgf-cm, 69 in.·lbf)

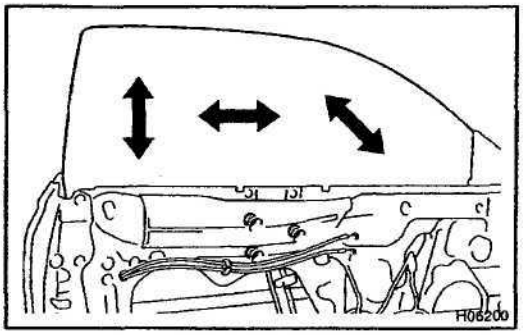

(c) Adjust the glass to the proper position (forward/rearward). Loosen the 3 nuts of the carrier plate for adjustment.

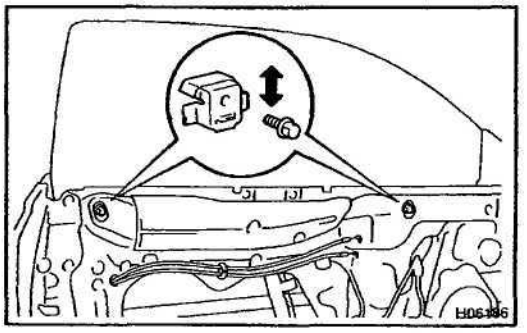

(d) Adjust the glass to the proper position vertically. (With the glass fully closed).
Adjust the door window upper stops.

Torque: 11 N·m (115 kgf·cm, 8 ft·lbf)

REASSEMBLY

Reassembly is in the reverse order of disassembly (See page BO–11).

BACK DOOR

COMPONENTS

BO1DO-02

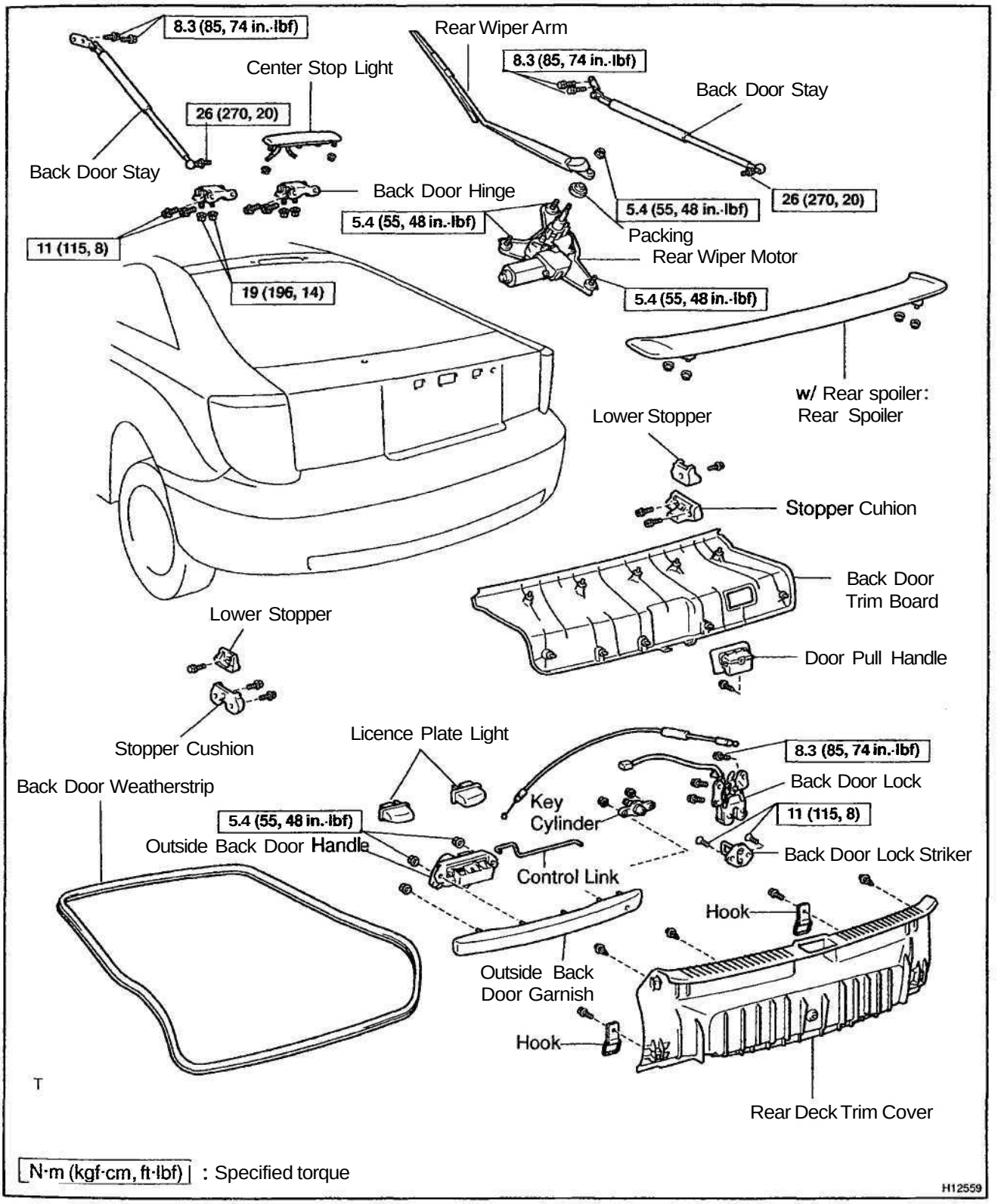

DISASSEMBLY

1. **w/ Rear spoiler:**
   REMOVE REAR SPOILER
2. **REMOVE DOOR PULL HANDLE**

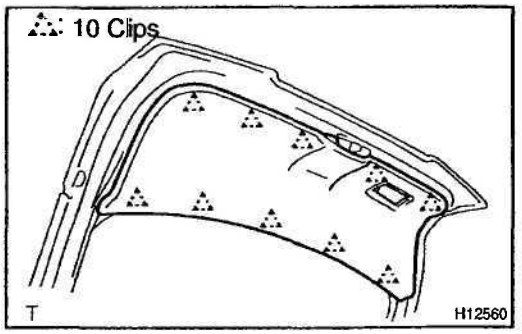

3. **REMOVE BACK DOOR TRIM BOARD**

Using a screwdriver, remove the back door trim board.

HINT:

Tape the screwdriver tip before use.

4. **REMOVE REAR WIPER ARM**

HINT:

- At the time of reassembly, please refer to the following items
- Operate the wiper motor once and turn the wiper switch OFF.
- Install the rear wiper arm and tighten the nut by hand.

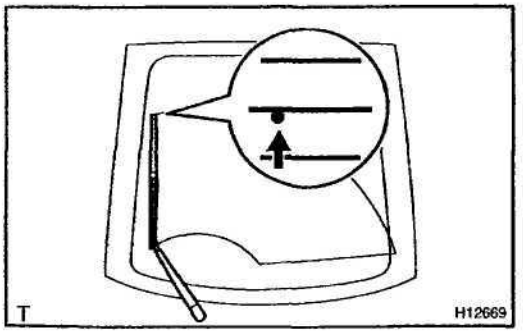

- Adjust the installation position fo the wiper arm at a point in defogger pattern.
- Tighten the nut.
  Torque: 5.4 N·m (55 kgf·cm, 48 in.·lbf)

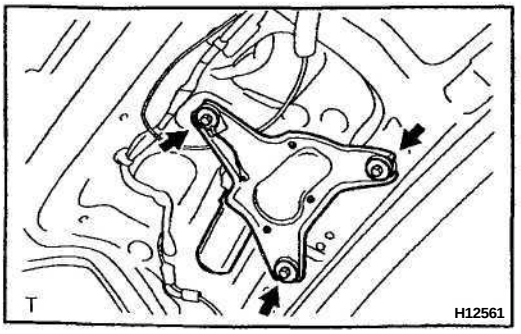

5. **REMOVE REAR WIPER MOTOR**

(a) Disconnect the connector.

(b) Unfasten the 3 bolts and remove the rear wiper motor.
Torque: 5.4 N·m (55 kgf·cm, 48 in.·lbf)

(c) Remove the packing.

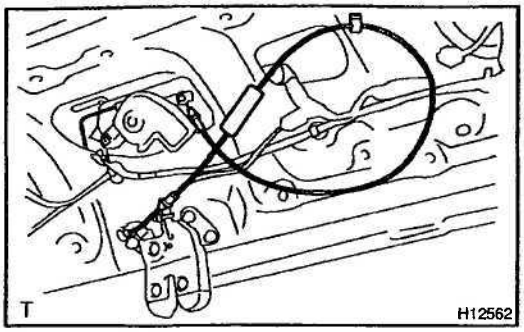

6. REMOVE CONTROL CABLE

(a) Disconnect the cable from the back door lock.
(b) Disconnect the cable from the outside back door handle.
(c) Remove the clamp and control cable.

7. REMOVE BACK DOOR LOCK

(a) Remove the wire harness clamp from the door lock.
(b) Remove the 3 bolts and back door lock.
Torque: 5.4 N·m (55 kgf·cm, 48 in.·lbf)
(c) Disconnect the connector.

8. REMOVE KEY CYLINDER

(a) Disconnect the control link.
(b) Remove the 2 nuts and key cylinder.

9. REMOVE OUTSIDE BACK DOOR HANDLE

(a) w/ Power door lock:
Disconnect the connector.
(b) Remove the 2 nuts and outside back door handle.
Torque: 5.4 N·m (55 kgf·cm, 48 in.·lbf)
(c) Remove the control link from the outside back door handle.

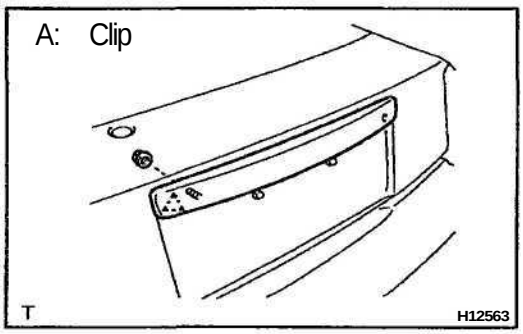

10. REMOVE OUTSIDE BACK DOOR GARNISH

(a) Remove the nut.
(b) Remove the outside back door garnish by compressing clip from the inside to disengage them.

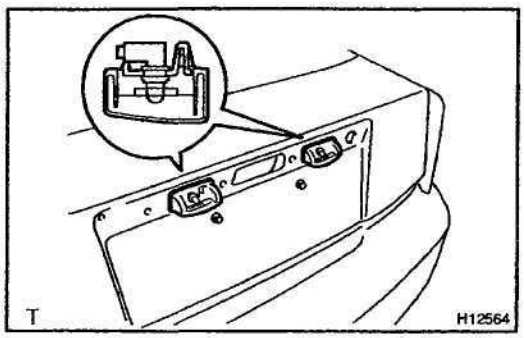

11. REMOVE LICENSE PLATE LIGHTS

(a) Disconnect the connectors.
(b) Using a screwdriver, remove the license plate lights.

HINT:
Tape the screwdriver tip before use.

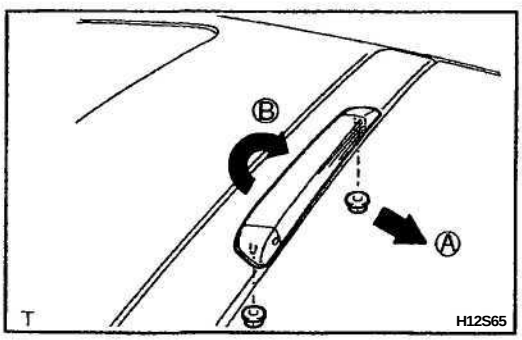

12. REMOVE CENTER STOP LIGHT

(a) Remove the 2 nuts.
(b) Disconnect the connector and washer hose, then remove the center stop light in order A, B as shown in the illustration..

13. REMOVE BACK DOOR WEATHERSTRIP

BO2OM-01

ADJUSTMENT

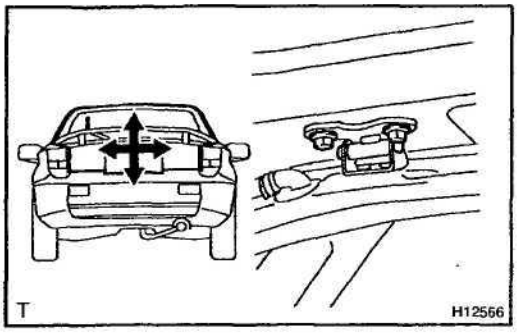

1. ADJUST DOOR IN LEFT/RIGHT AND VERTICAL DIRECTIONS

Loosen the door side hinge bolts to adjust.

Torque: 11 N·m (115 kgf·cm, 8 ft·lbf)

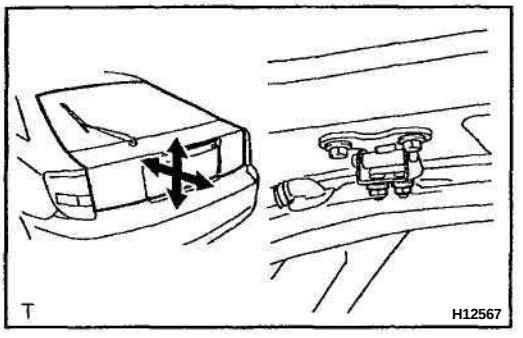

2. ADJUST DOOR IN FORWARD/REARWARD AND VERTICAL DIRECTIONS

Loosen the body side hinge bolts and nuts to adjust.

Torque: 19 N·m (196 kgf·cm, 14 ft·lbf)

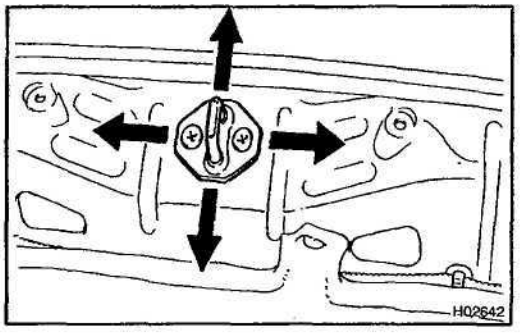

3. ADJUST DOOR LOCK STRIKER

(a) Check that the door fit and door linkages are adjusted correctly.

(b) Remove the luggage compartment mat.

(c) Remove the 2 hooks and rear deck trim cover.

(d) Loosen the striker mounting screws.

Torque: 11 N·m (115 kgf·cm, 8 ft·lbf)

(e) Using a plastic hammer, tap the striker to adjust.

(f) Reinstall the rear deck trim cover and 2 hooks.

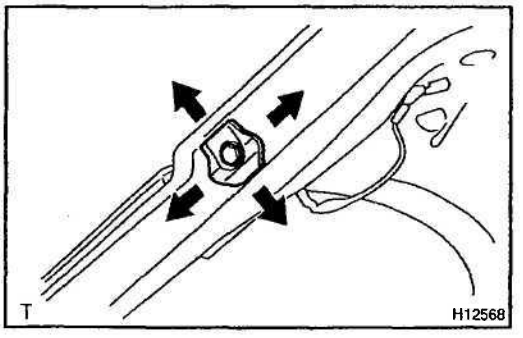

4. ADJUST LOWER STOPPER

Loosen the stopper mounting bolts to adjust.

REASSEMBLY

Reassembly is in the reverse order of disassembly (See page BO–23).

BACK DOOR STAY

BO2NF–01

REPLACEMENT

1. REMOVE BACK DOOR STAY

(a) Remove the bolt and back door stay from the back door panel.

HINT:

While supporting the back door with your hand, remove the back door stay.

(b) Remove the 2 bolts and back door stay from the body.

2. IF NECESSARY, REPLACE BACK DOOR STAY

NOTICE:

When handling the back door stay

- **Do not disassemble the back door stay because the cylinder is filled with pressurized gas.**

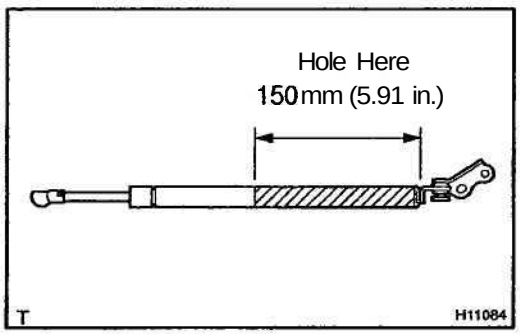

- **If the back door stay is to be replaced, drill a 2.0 - 3.0 mm (0.079 - 0.118 in.) hole in the bottom of the back door stay as shown in the illustration to completely release the high–pressure gas before disposing of it.**
- **When drilling, chips may fly out so work carefully.**
- **The gas is colorless, odorless and non–toxic.**
- **When working, handle the back door stay carefully. Never score or scratch the exposed part of the piston rod, and never allow paint or oil to get on it.**
- **Do not turn the piston rod and cylinder with the back door stay fully extended.**

3. **INSTALL BACK DOOR STAY**

(a) Install the 2 bolts and back door stay to the body.
Torque: 8.3 N·m (85 kgf·cm, 74 in.·lbf)

(b) Install the bolt and back door stay to the back door panel.
Torque: 26 N·m (270 kgf·cm, 20 ft·lbf)

FRONT WIPER AND WASHER

COMPONENTS

B01DT-02

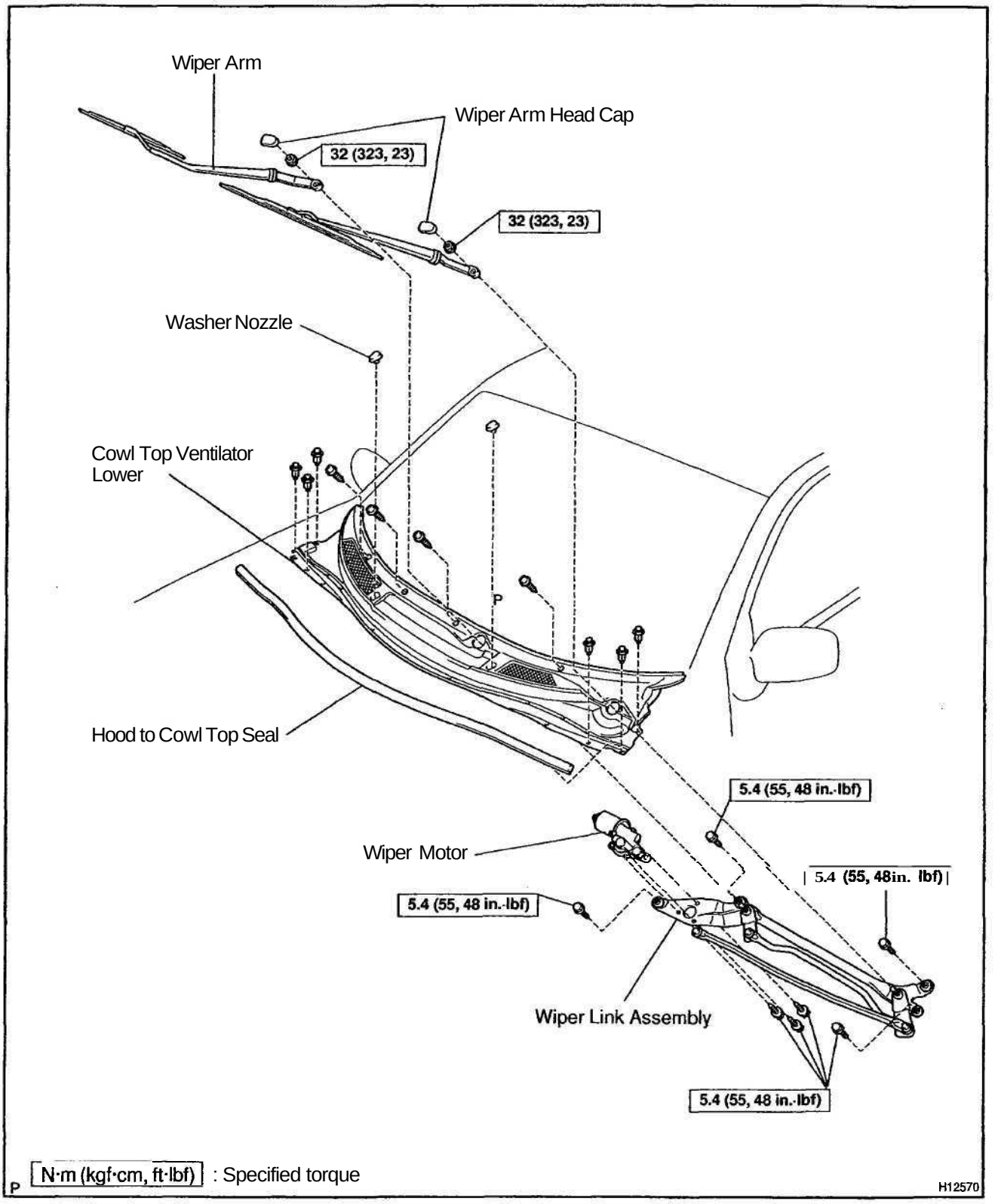

REMOVAL

1. REMOVE WIPER ARMS

Remove the 2 wiper arm head caps, 2 nuts and 2 wiper arms.

2. REMOVE HOOD TO COWL TOP SEAL

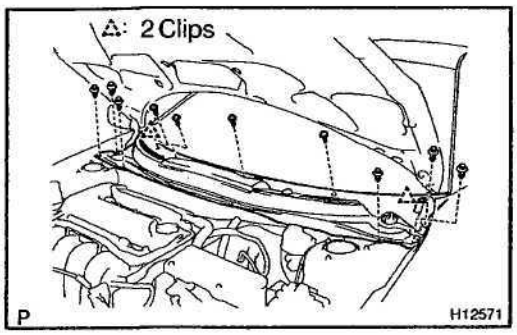

3. REMOVE COWL TOP VENTILATOR LOUVER

(a) Remove the 4 screws and 6 clips.

(b) Using a screwdriver, remove the cowl top ventilator louver, then disconnect the washer hoses.

HINT:

Tape the screwdriver tip before use.

(c) Remove the 2 washer nozzles from the cowl top ventilator louver.

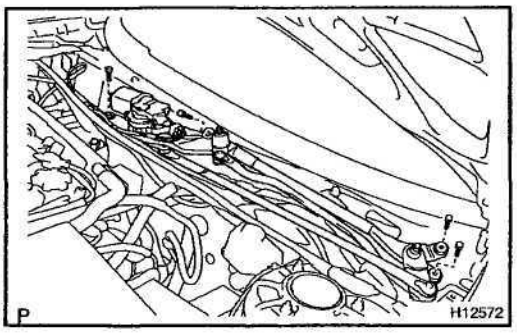

4. REMOVE WIPER MOTOR AND LINK ASSEMBLY

(a) Disconnect the connector.

(b) Remove the 4 bolts and wiper motor and link assembly.

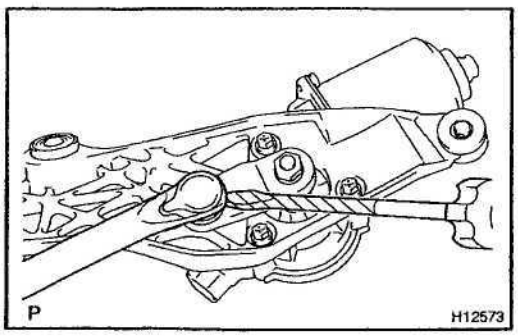

5. REMOVE WIPER MOTOR

(a) Using a screwdriver, disconnect the wiper link from the motor.

HINT:

Tape the screwdriver tip before use.

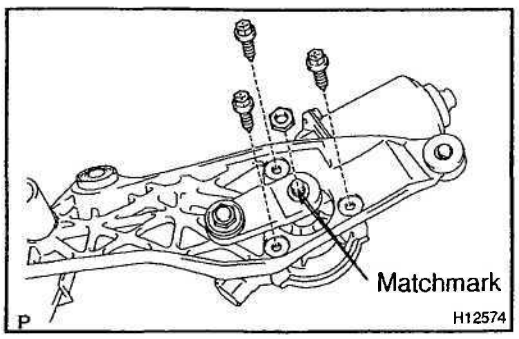

(b) Remove the nut.

(c) Place the matchmarks on the wiper link and motor.

(d) Remove the 3 screws and wiper motor from the wiper link.

2 Jet nozzle:

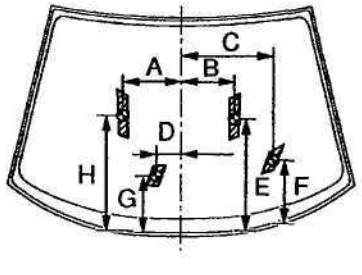

T

3 Jet nozzle:

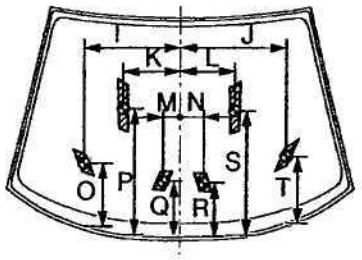

T H12667
H12668

H13146

BO2NH-01

INSPECTION

INSPECT WASHER NOZZLE

While operating the washer check whether the point where the washer fluid hits the windshield and the surge area are within the range indicated by the hatched line.

A: 241.9 mm (9.524 in.)
B: 219.6 mm (8.646 in.)
C: 381.2 mm (15.008 in.)
D: 102.8 mm (4.047 in.)
E: 467.9 mm (18.421 in.)
F: 265.6 mm (10.457 in.)
G: 236.3 mm (9.303 in.)
H: 475.0 mm (18.701 in.)
I: 39 mm (15.524 in.)
J: 439.6 mm (17.307 in.)
K: 237.3 mm (9.343 in.)
L: 225.2 mm (8.866 in.)
M: 69.8 mm (2.748 in.)
N: 94.4 mm (3.717 in.)
O: 258.2 mm (10.165 in.)
P: 517.5 mm (20.374 in.)
Q: 234.2 mm (9.220 in.)
R: 228.3 mm (8.988 in.)
S: 513.3 mm (20.209 in.)
T: 276.6 mm (10.890 in.)

BO1DW-02

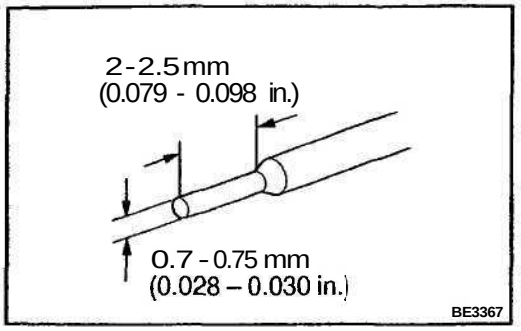

ADJUSTMENT

ADJUST FRONT WASHER NOZZLE

Using a tool like the one shown in the illustration, change the direction of the nozzle hole to adjust the point where washer fluid hits the windshield.

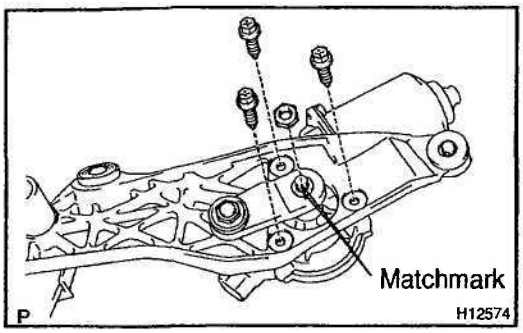

INSTALLATION

1. INSTALL WIPER MOTOR

(a) Install the wiper motor with the 3 screws to the wiper link.
Torque: 5.4 N·m (55 kgf·cm, 48 in.·lbf)

(b) Align the matchmarks on the wiper link and wiper motor, then install the nut.

(c) Connect the wiper link to the wiper motor.

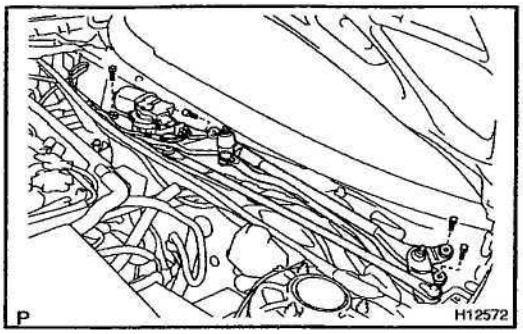

2. INSTALL WIPER MOTOR AND LINK ASSEMBLY

(a) Install the wiper motor and link assembly with the 4 screws.
Torque: 5.4 N·m (55 kgf·cm, 48 in.·lbf)

(b) Connect the connector.

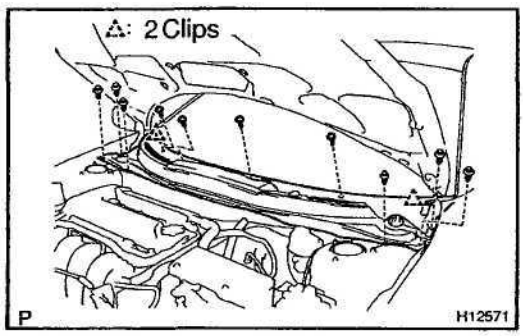

3. INSTALL COWL TOP VENTILATOR LOUVER

(a) Install the 2 washer nozzle to the cowl top ventilator louver.

(b) Connect the washer hose, then install the cowl top ventilator louver with the 4 screws and 6 clips.

HINT:
Check that the 2 clips on the back side of the cowl top ventilator louver are surely fixed to the body.

4. INSTALL HOOD TO COWL TOP SEAL

5. INSTALL WIPER ARMS

(a) Operate the wipers once and turn the wiper switch OFF.

(b) Install the wiper arms and tighten the nuts by hand.

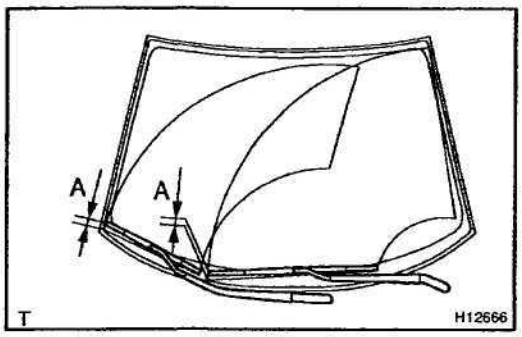

(c) Adjust the installation positions of the wiper arms to the positions as shown in the illustration.
A:30 ± 7.5 mm (1.18 ± 0.295 in.)

(d) Torque the nuts.
Torque: 32 N·m (323 kgf·cm, 23 ft·lbf)

(e) Install the 2 wiper and head caps.

REAR WIPER AND WASHER

COMPONENTS

BO1DY–02

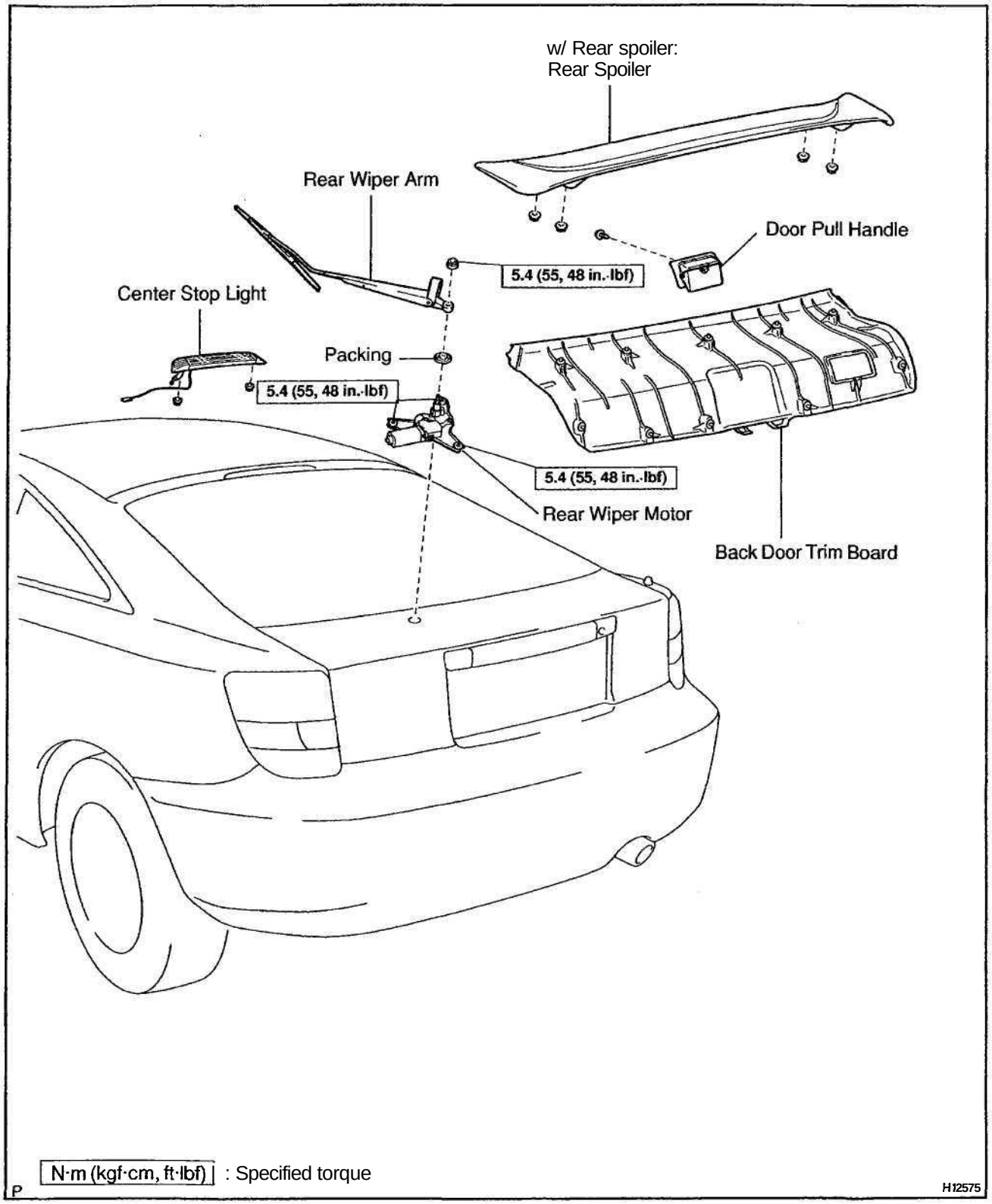

REMOVAL

1. w/ Rear spoiler:
   REMOVE REAR SPOILER
2. REMOVE DOOR PULL HANDLE

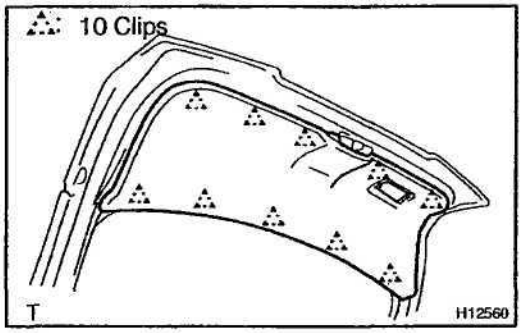

3. REMOVE BACK DOOR TRIM BOARD

Using a screwdriver, remove the back door trim board.

HINT:

Tape the screwdriver tip before use.

4. REMOVE REAR WIPER ARM

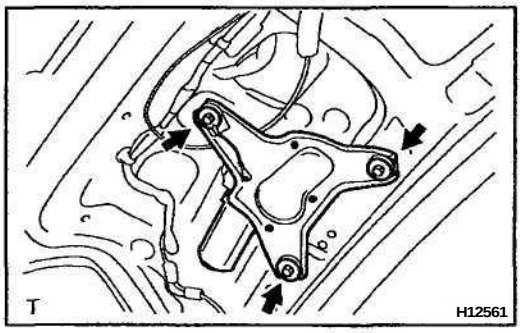

5. REMOVE REAR WIPER MOTOR

(a) Disconnect the connector.
(b) Unfasten the 3 bolts and remove the rear wiper motor.
(c) Remove the packing.

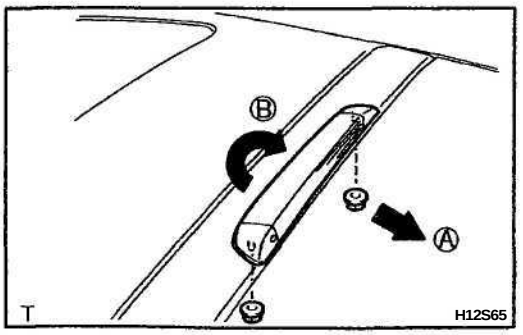

6. REMOVE REAR WASHER NOZZLE

(a) Remove the 2 nuts.
(b) Disconnect the connector and washer hose, then remove the center stop light in order A, B as shown in the illustration.

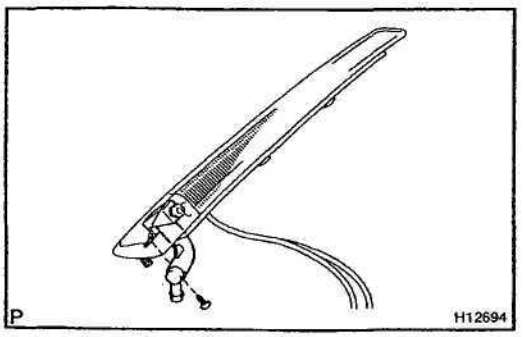

(c) Remove the screw and rear washer nozzle from the center stop light.

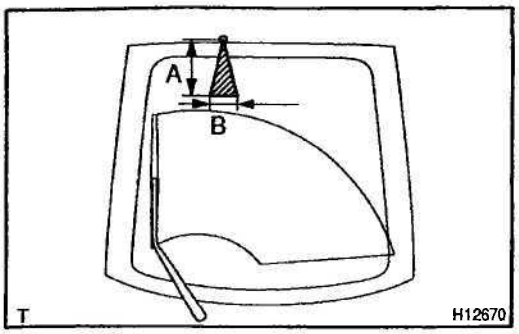

INSPECTION

INSPECT WASHER NOZZLE

While operating the washer, check if the upper point where the washer fluid hits the back door glass and surge area are within range indicated by the hatched line.

A: 205 mm (8.07 in.)
B: 105 mm (4.13 in.)

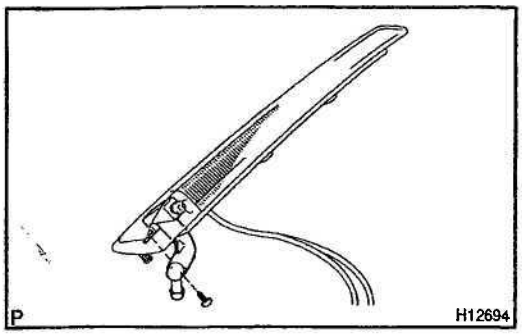

INSTALLATION

1. INSTALL REAR WASHER NOZZLE

(a) Install the rear wiper nozzle to the center step light with the screw.

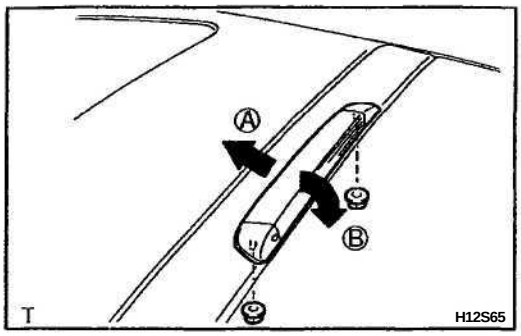

(b) Connect hte connector and wsher hose, then install the center stop light with the 2 nuts in order A, B as shown in the illustration.

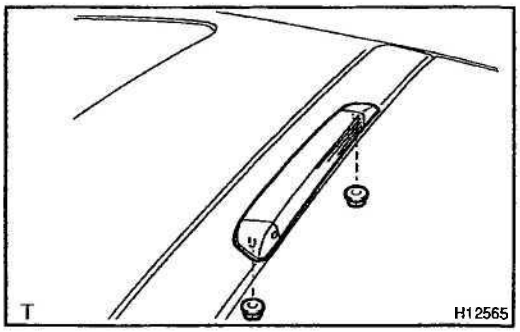

(c) Connect the connector and washer hose, then install the center stop light with the 2 nuts.

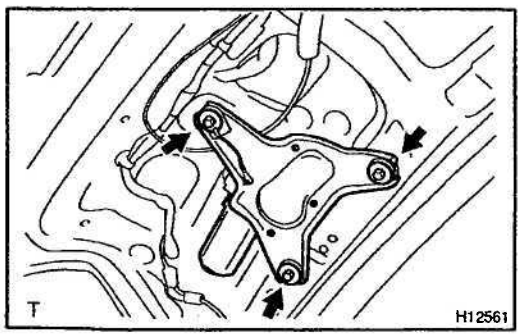

2. INSTALL REAR WIPER MOTOR

(a) Install the packing.

(b) Install the rear wiper motor and fasten the 3 bolts.

Torque: 5.4 N·m (55 kgf·cm, 48 in.·lbf)

(c) Connect the connector.

3. INSTALL BACK DOOR TRIM BOARD

4. INSTALL DOOR PULL HANDLE

5. INSTALL REAR WIPER ARM

(a) Operate the wiper motor once and turn the wiper switch OFF.

(b) Install the rear wiper arm and tighten the nut by hand.

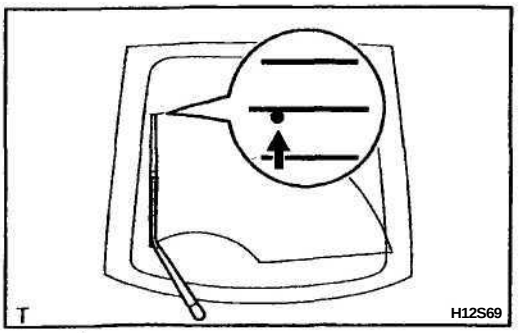

(c) Adjust the installation position of the wiper arm at a point in defogger pattern.

(d) Tighten the nut.

Torque: 5.4 N·m (55 kgf·cm, 48 in.·lbf)

6. w/ Rear spoiler:

REMOVE REAR SPOILER

ROOF DRIP SIDE MOULDING

COMPONENTS

BO2NL-01

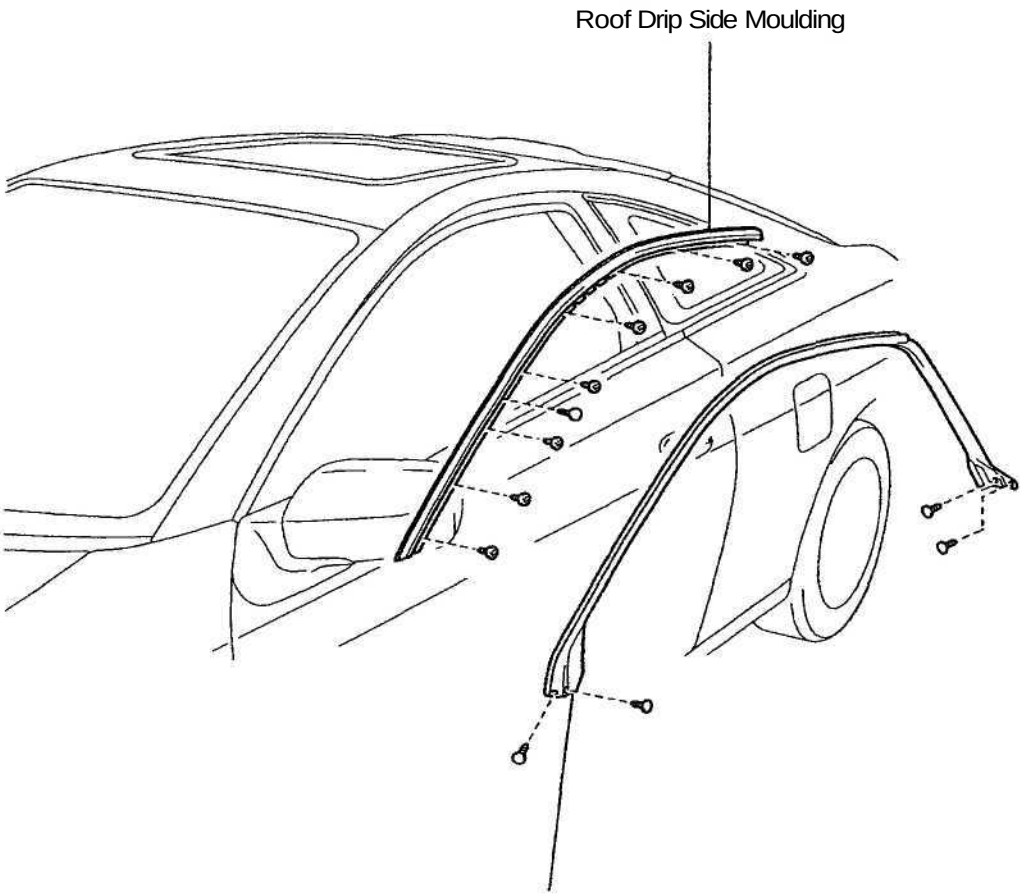

P

H12576

BO2N4-01

REMOVAL

1. REMOVE ROOF SIDE RAIL WEATHERSTRIP

(a) Using a clip remover, remove the 4 clips.
(b) Remove the roof side rail weatherstrip.

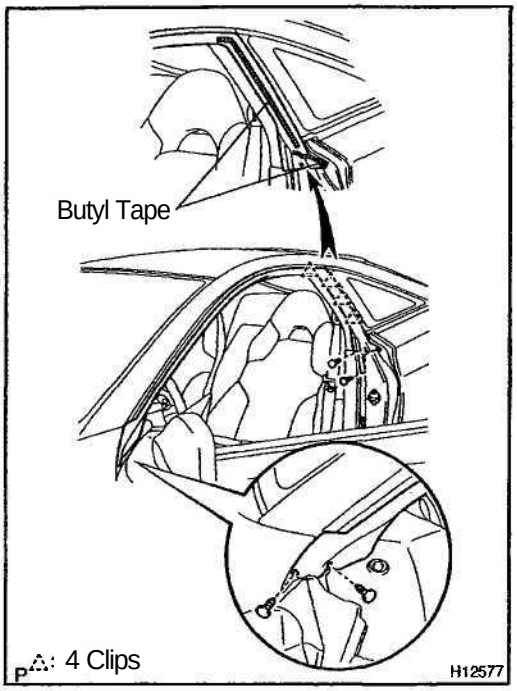

2. REMOVE ROOF DRIP SIDE MOULDING

Remove the 8 screws and roof drip side moulding.

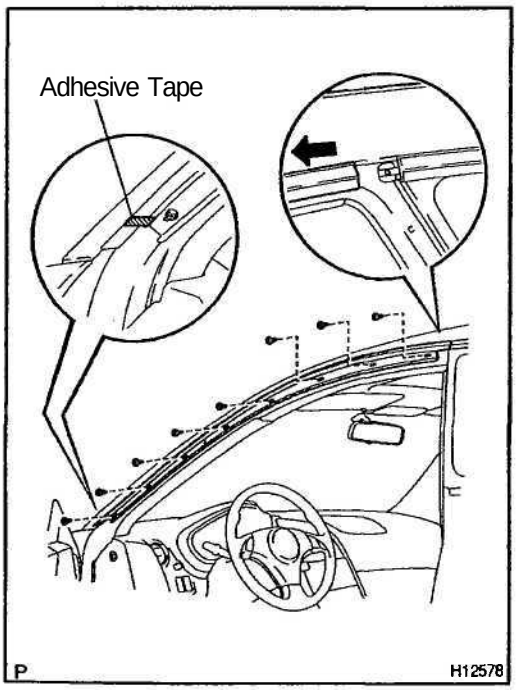

INSTALLATION

1. CLEAN BODY MOUNTING SURFACE

(a) Using a heat light, heat the body mounting surface to 40 – 60 °C (104 – 140 °F).

NOTICE:

Do not heat the body excessively.

(b) Remove the adhesive tape from the body.

(c) Wipe off stains with cleaner.

2. If reusing the moulding:

CLEAN MOULDING

(a) Using a heat light, heat the moulding to 20 - 30 °C (68 – 86 °F).

NOTICE:

Do not heat the moulding excessively.

(b) Remove the adhesive tape from the moulding.

(c) Wipe off stains with cleaner.

(d) Apply a new adhesive tape to the moulding.

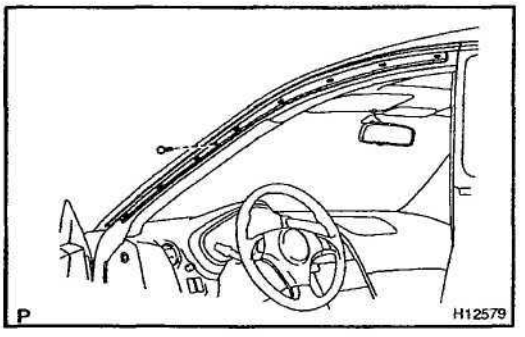

3. INSTALL ROOF DRIP SIDE MOULDING

(a) If using a new moulding;
Secure the roof drip side moulding with the clip for temporary attachment.

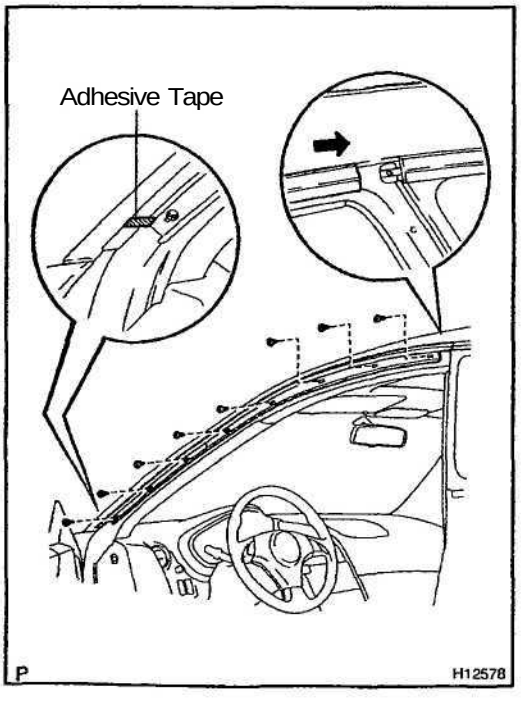

(b) Install the roof drip side moulding with the 8 screws.

HINT:

When installing the moulding, tighten the screws from the rear side to the front side of the moulding.

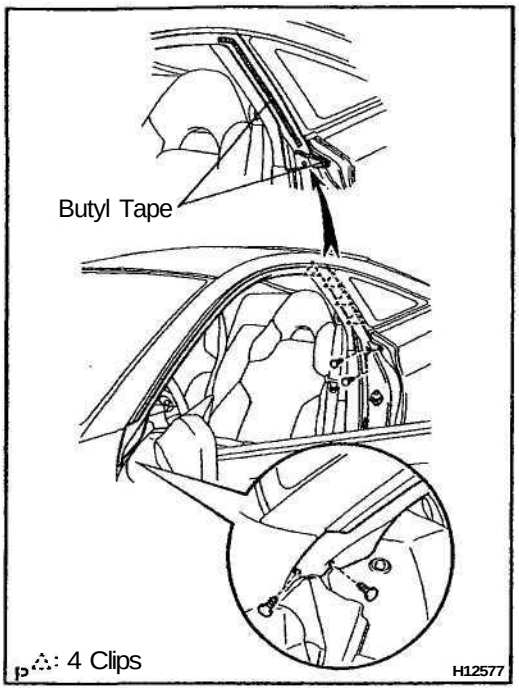

4. INSTALL ROOF SIDE RAIL WEATHERSTRIP

Install the roof side rail weatherstrip with the 4 clips as shown in the illustration.

ROOF SIDE MOULDING

BO2NO-01

COMPONENTS

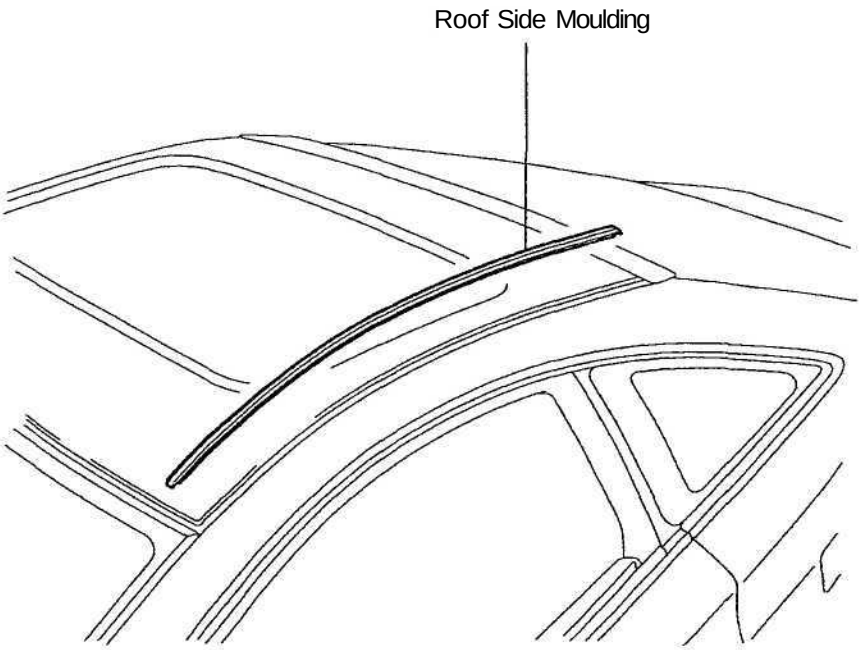

P

H12580

BO2NP-01

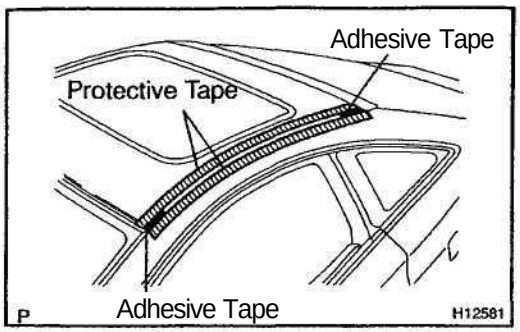

REMOVAL

1. REMOVE ENDS OF MOULDING

(a) Apply protective tape to the outer surface as shown in the illustration to keep the surface from being scratched.

(b) Using a heat light, heat the moulding to 20 - 30 °C (68 - 86 °F).

NOTICE:

Do not heat the moulding excessively.

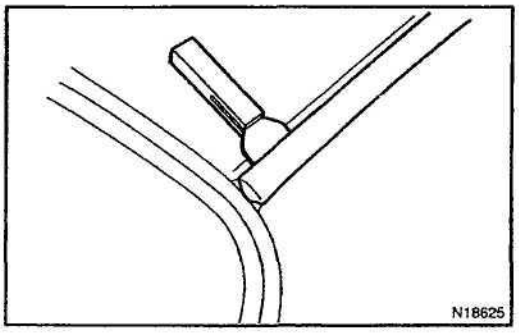

(c) Using a scraper, pull off the roof side moulding from the front end and rear end.

HINT:

Tape the screwdriver tip before use.

2. REMOVE MOULDING AND ADHESIVE

(a) Pull off the moulding by cutting the adhesive with a knife at the front and rear ends.

(b) Remove the moulding.

NOTICE:

Do not damage the body with the knife.

INSTALLATION

1. CLEAN CONTRACT SURFACE OF BODY

(a) Using a heat light, heat the moulding surface to 40 - 60 °C (104 – 140 °F).

NOTICE:

Do not heat the body excessively.

(b) Using a knife, cut away any rough areas on the body.

NOTICE:

Be careful not to damage the body.

(c) Wipe off stains with cleaner.

2. If reusing the moulding:
CLEAN MOULDING

(a) Using a heat light, heat the moulding surface to 20 - 30 °C (68 – 86 °F).

NOTICE:

Do not heat the moulding excessively.

(b) Using a knife, cut the remaining adhesive from the moulding.

NOTICE:

Be careful not to damage the moulding.

(c) Wipe off stains with cleaner.

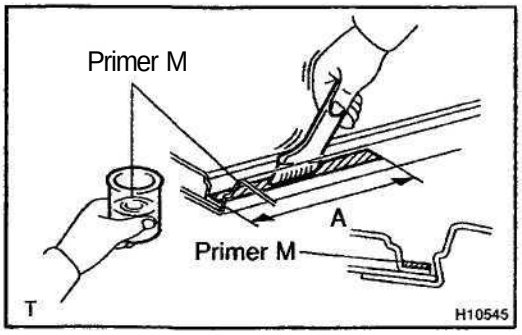

3. COAT CONTRACT SURFACE OF BODY WITH PRIMER "M"

Using a brush, coat the contact surface on the body with Primer M as shown in the illustration.

Front and rear end:
A: 66 mm (2.60 in.)

NOTICE:

- **Let the primer coating dry for 3 minutes or more.**
- **Do not coat the adhesive.**
- **Do not keep any of the opened Primer M for later use.**

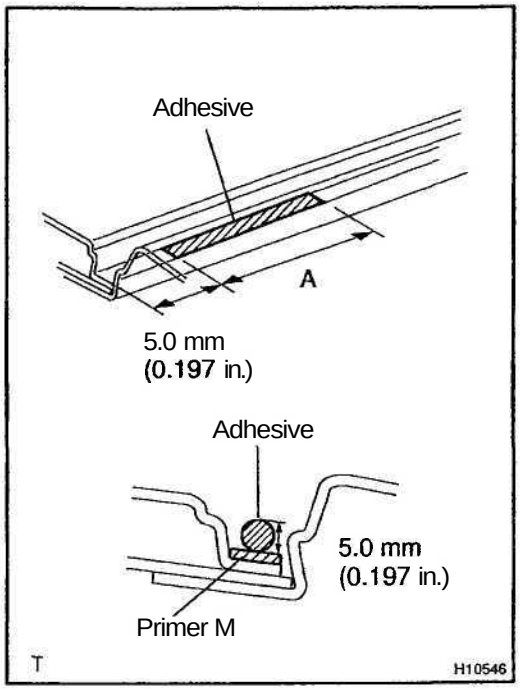

4. APPLY ADHESIVE

(a) Cut off the tip of the cartridge nozzle.

Part No. 08850–00801 or equivalent

HINT:

After cutting off the tip, use all adhesive within the time described in the table below.

Temperature	Tackfree time
35 °C (95 °F)	15 minutes
20 °C (68 °F)	100 minutes
5 °C (41 °F)	8 hours

(b) Load the cartridge into the sealer gun.

(c) Apply adhesive to the hatched area in the illustration for both front and rear of the vehicle.

Front and rear end:

A: 50 mm (1.97 in.)

HINT:

When removing the moulding, apply adhesive well to the part where the body sealer is removed.

5. INSTALL MOULDING

Push the moulding to the body.

NOTICE:

- **Make sure that the body and moulding are heated to the proper temperature.**
- **Do not depress the adhesive coated parts excessively but just hold them down with your thumb.**
- **Scrape off any overflowing adhesive with a plastic spatula and clean the surface with a dry rag.**
- **Take care not to drive the vehicle during the time described in the table below.**

Temperature	Minimum time prior to driving the vehicle
35 °C (95 °F)	1.5 hours
20 °C (68 °F)	5 hours
5 °C (41 °F)	24 hours

SIDE MUD GUARD

COMPONENTS

BO1E6-02

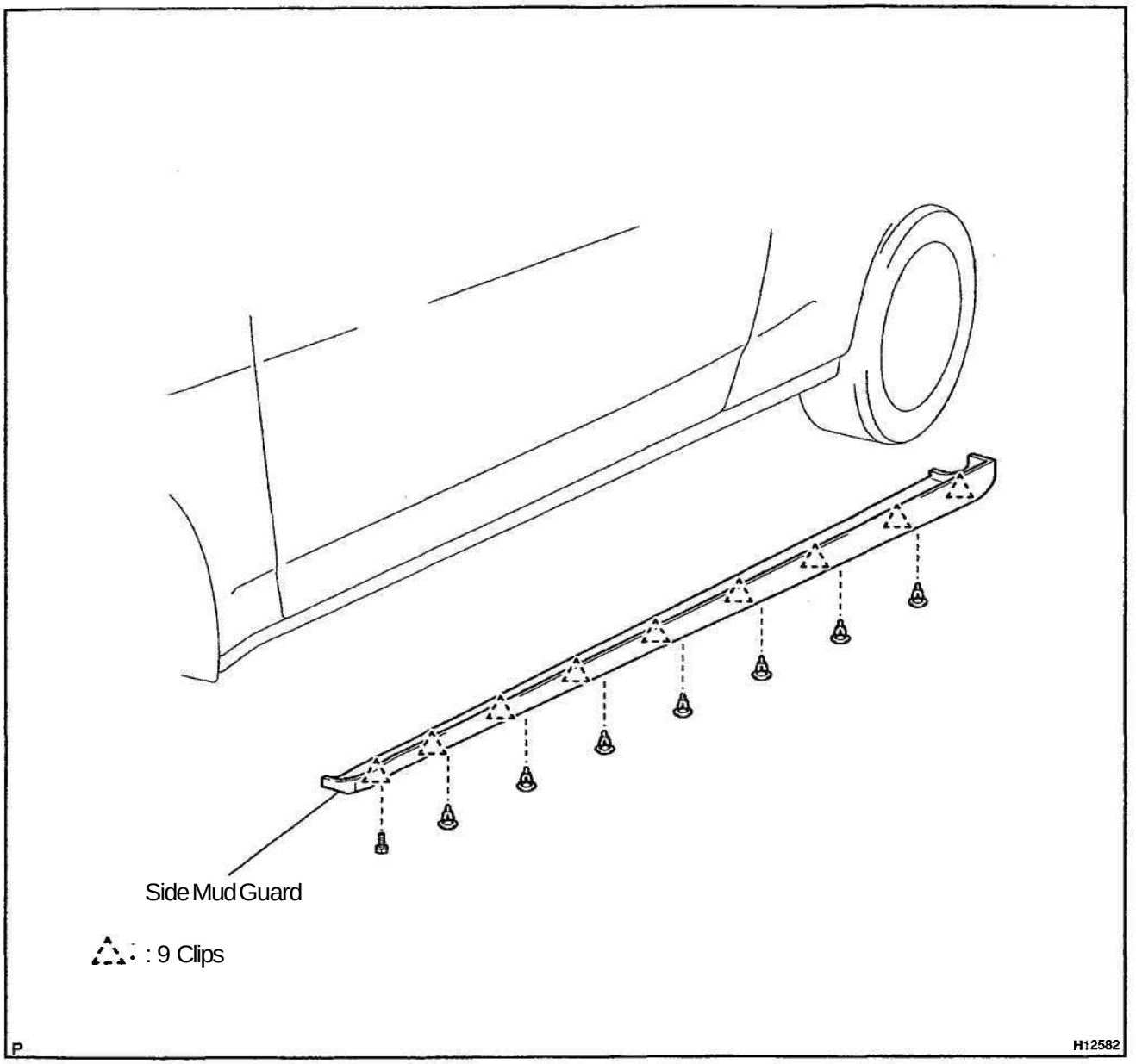

WINDSHIELD

COMPONENTS

BO1ES-02

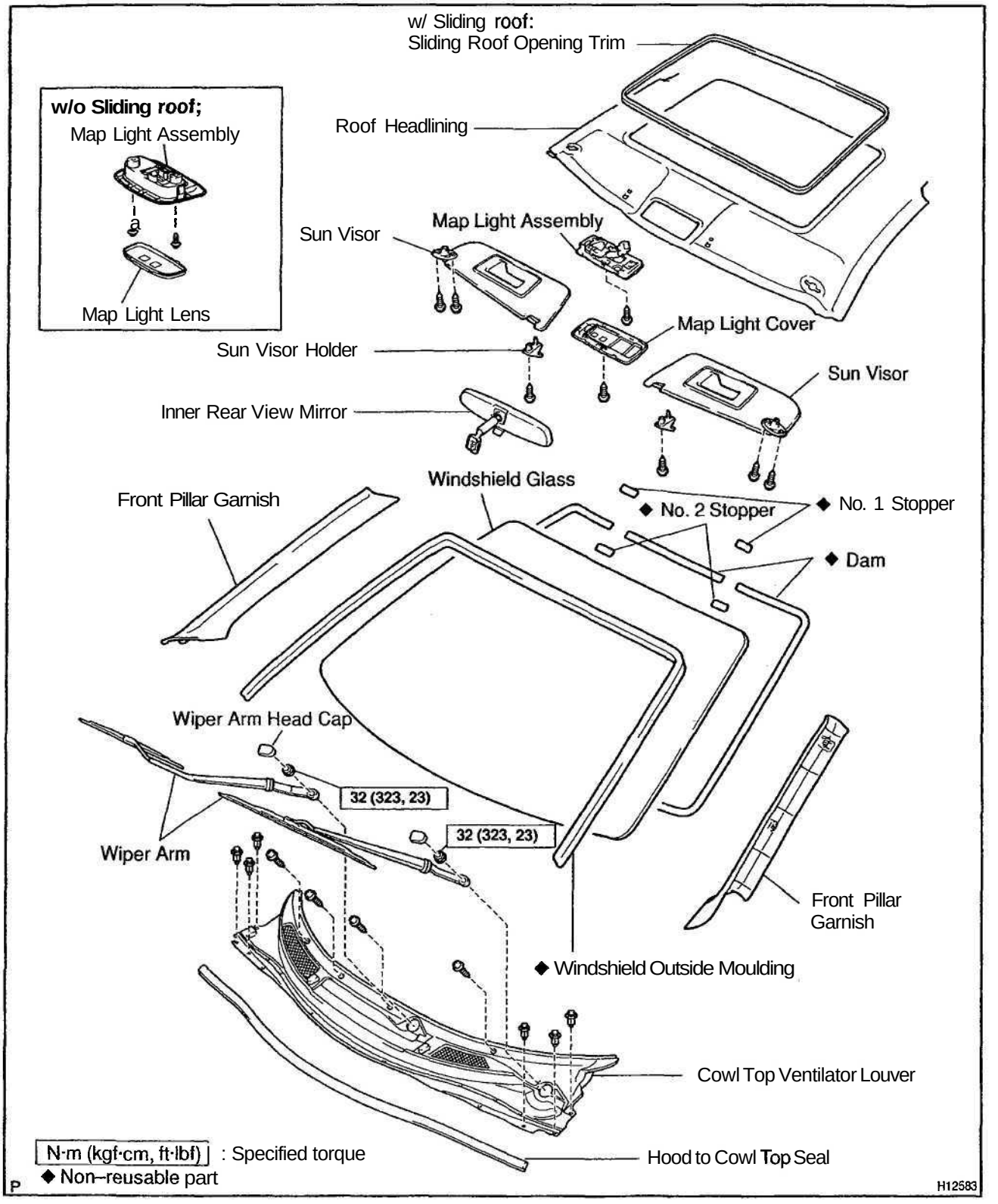

BO2NR-01

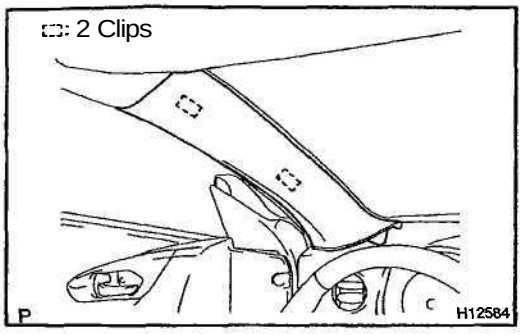

REMOVAL

1. REMOVE FRONT PILLAR GARNISH

(a) Using a screwdriver, remove the front pillar garnish.

HINT:

Tape the screwdriver tip before use.

(b) Employ the same manner described above to the other side.

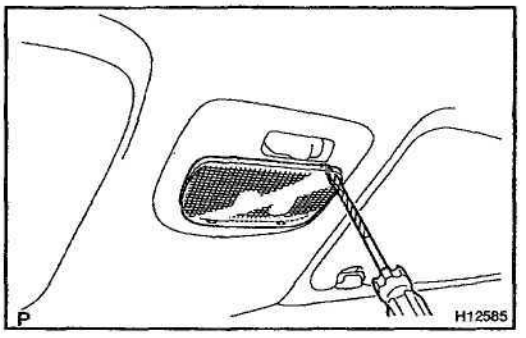

2. w/o Sliding roof:
REMOVE MAP LIGHT ASSEMBLY

(a) Using a screwdriver, remove the lens.

HINT:

Tape the screwdriver tip before use.

(b) Remove the 2 screws and map light assembly, then disconnect the connector.

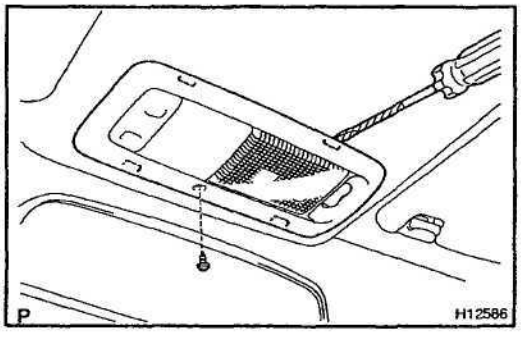

3. w/ Sliding roof:
REMOVE MAP LIGHT ASSEMBLY

(a) Remove the screw.

(b) Using a moulding remover, remove the cover.

(c) Remove the screw and map light assembly, then disconnect the connector.

4. REMOVE SUN VISORS

5. REMOVE SUN VISOR HOLDERS

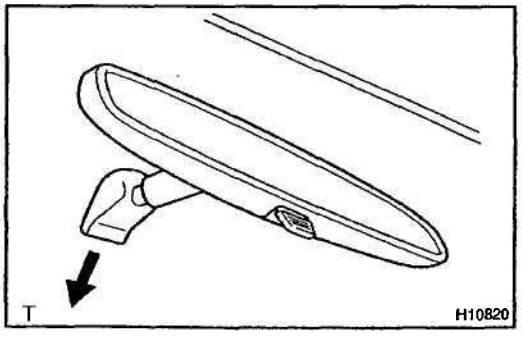

6. REMOVE INNER REAR VIEW MIRROR

Remove the inner rear view mirror as shown in the illustration.

7. REMOVE WIPER ARMS

Remove the 2 wiper arm head caps, 2 nuts and 2 wiper arms.

8. REMOVE HOOD TO COWL TOP SEAL

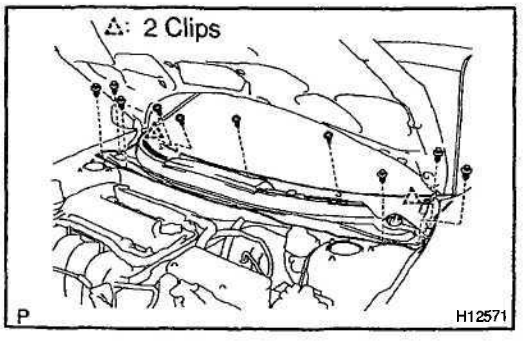

9. REMOVE COWL TOP VENTILATOR LOUVER

(a) Remove the 4 screws and 6 clips.

(b) Using a screwdriver, remove the cowl top ventilator louver, then disconnect the washer hoses.

HINT:

Tape the screwdriver tip before use.

10. w/ Sliding roof:
REMOVE SLIDING ROOF OPENING TRIM

11. PULL DOWN FRONT PART OF ROOF HEADLINING

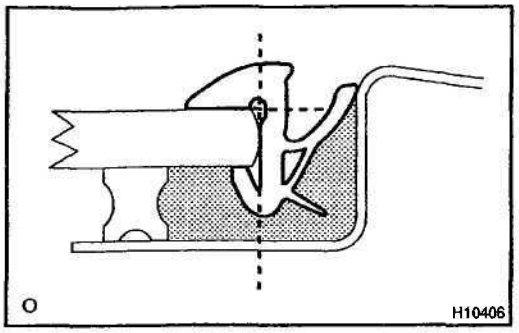

12. REMOVE WINDSHIELD OUTSIDE MOULDING

(a) Using a knife, cut off the moulding as shown in the illustration.

NOTICE:

Do not damage the body with the knife.

(b) Remove the remaining moulding.

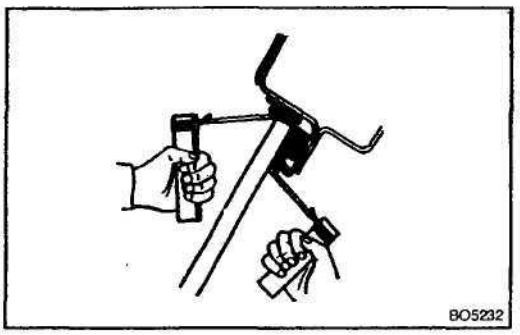

13. REMOVE WINDSHIELD GLASS

(a) Insert a piano wire between body and glass and let it pass through.

(b) Tie both wire ends to wooden blocks or similar objects.

(c) w/ Front window defogger:
Disconnect the connector.

NOTICE:

Be careful not to damage the wire harness.

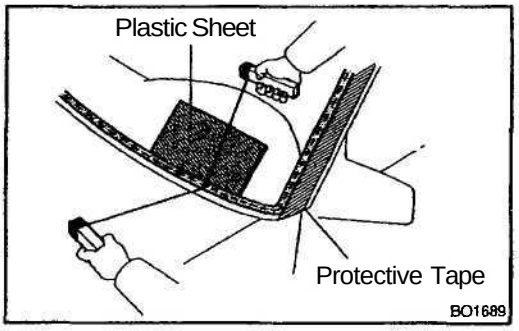

(d) Cut the adhesive by pulling the piano wire around it.

NOTICE:

When separating the glass, take care not to damage the paint and exterior ornaments. To prevent the safety pad from being scratched when removing the windshield, place a plastic sheet between the piano wire and safety pad.

HINT:

Apply protective tape to the outer surface to keep the surface from being scratched.

(e) Remove the glass.

NOTICE:

Leave the adhesive on the body as much as possible when cutting off the glass.

BO2NS-01

INSTALLATION

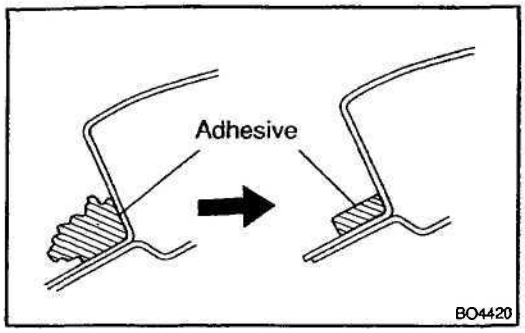

1. CLEAN AND SHAPE CONTACT SURFACE OF BODY

(a) Using a knife, cut away any rough areas on the body.

HINT:

Leave the adhesive on the body as much as possible.

(b) Clean the cut surface of the adhesive with a shop rag saturated in cleaner.

HINT:

Even if all the adhesive has been removed, clean the body.

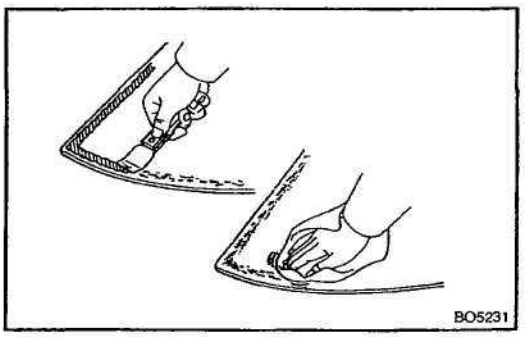

2. CLEAN REMOVED GLASS

(a) Remove the damaged No.2 stoppers and dams.

(b) Using a scraper, remove the adhesive sticking to the glass.

(c) Clean the glass with cleaner.

NOTICE:

- **Be careful not to damage the glass.**
- **Do not touch the glass face after cleaning it.**

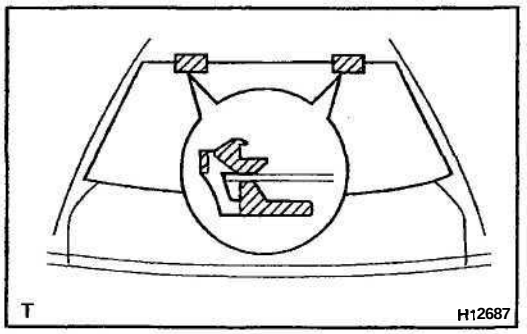

3. w/ No. 1 Stopper: REPLACE NO. 1 STOPPERS

(a) Remove the damaged stoppers.

(b) Cut off the old adhesive around the stopper installation area.

NOTICE:

Be careful not to damage the body.

(c) Clean the installation area.

(d) Attach new stoppers to the body so that the notches on the body will align with the stoppers as shown in the illustration.

HINT:

Make sure that the stoppers are installed facing the correct direction.

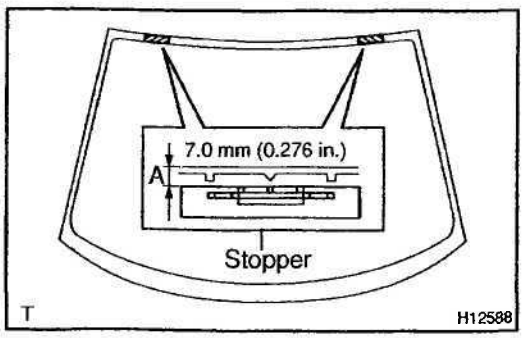

4. INSTALL NEW NO. 2 STOPPERS

Attach new stoppers to the glass so that the ceramic notches on the glass will align with the stoppers as shown in the illustration.

HINT:

Make sure that the stoppers are installed facing the correct direction.

A:

w/ No. 1 stopper: 7.7 ± 0.5 (0.303 ± 0.020 in.)

w/o No. 1 stopper: 9.0 ± 0.5 (0.354 ± 0.020 in.)

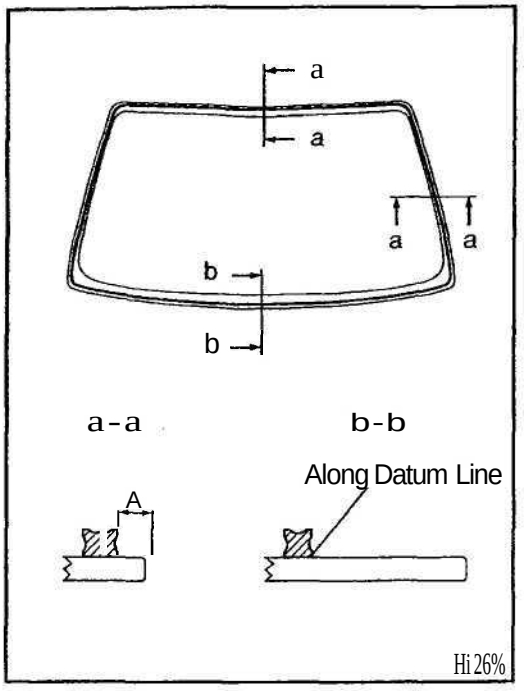

5. INSTALL NEW DAMS

Install new dams with double–stick tape as shown in the illustration.

A: 7.0 mm (0.276 in.)

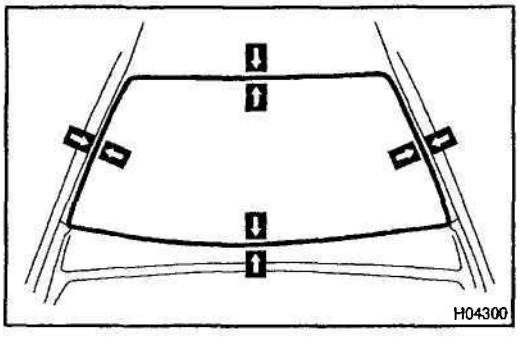

6. POSITION GLASS

(a) Place the glass in the correct position.
(b) Check that all contacting parts of the glass rim are set perfectly even.
(c) Place reference marks on the glass and body.
(d) Remove the glass.

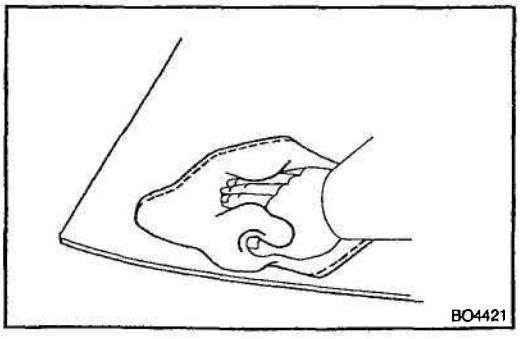

7. CLEAN CONTACT SURFACE OF GLASS

Using a cleaner, clean the contact surface which is black–colored area around the entire glass rim.

NOTICE:

Do not touch the glass face after cleaning it.

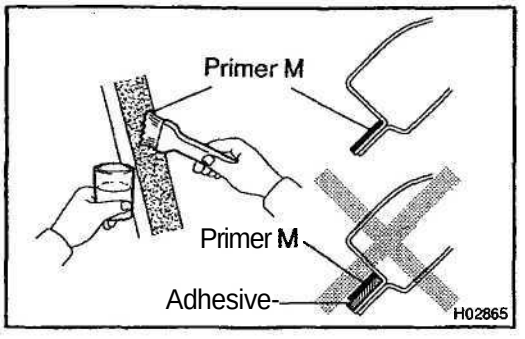

8. COAT CONTACT SURFACE OF BODY WITH PRIMER "M"

Using a brush, coat Primer M to the exposed part of body on the vehicle side.

NOTICE:

- **Allow 3 minutes or more to dry the primer coated surface.**
- **Do not coat Primer M to the adhesive.**
- **Do not keep any of the opened Primer M for later use.**

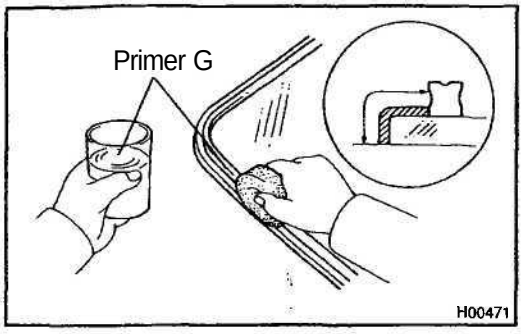

9. COAT CONTACT SURFACE OF GLASS WITH PRIMER "G"

(a) Using a brush or sponge, coat the edge of the glass and the contact surface with Primer G as shown in the illustration.

(b) When the primer is coated wrongly to the area other than the specified, wipe it off with a clean shop rag before the primer dries.

NOTICE:

- **Allow 3 minutes or more to dry the primer coated surface.**
- **Do not keep any of the opened Primer G for later use.**

10. APPLY ADHESIVE

(a) Cut off the tip of the cartridge nozzle.
Part No. 08850–00801 or equivalent

HINT:
After cutting off the tip, use all adhesive within the time described in the table below.

Temperature	Tackfree time
35 °C (95 °F)	15 minutes
20 °C (68 °F)	100 minutes
5 °C (41 °F)	8 hours

(b) Load the cartridge into the sealer gun.

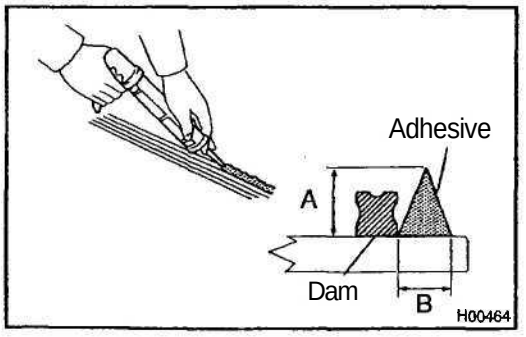

(c) Coat the glass with adhesive as shown in the illustration.
A: 12.5 mm (0.492 in.)
B: 8.0 mm (0.315 in.)

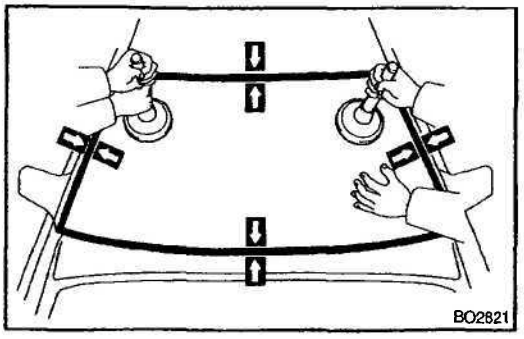

11. INSTALL WINDSHIELD GLASS AND MOULDING

(a) Install the glass, aligning the reference marks using a suction rubber.

HINT:
Check to see that the stoppers are attached to the body correctly.

(b) Lightly press the glass front surface for close contact.

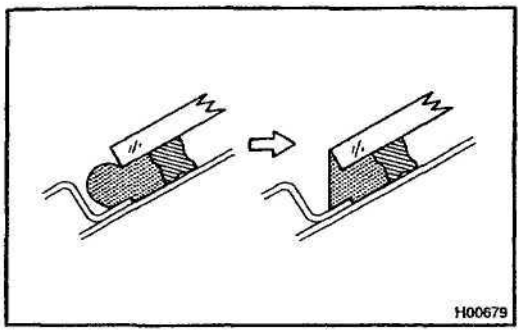

(c) Correct insufficient or protruded adhesive agent using a spatula.

HINT:

Apply the adhesive agent up to the windshield glass edge.

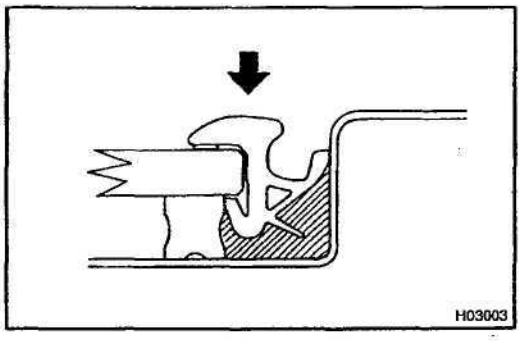

(d) Install a new windshield moulding to the windshield glass before the adhesive agent hardens.

HINT:

Install the moulding, aligning the center of moulding with the center of body.

(e) Remove any excessive adhesive agent before it hardens.

(f) Hold the glass and moulding in place securely with a protective tape or equivalent until the adhesive hardens.

NOTICE:

Take care not to drive the vehicle during the time described in the table below.

Temperature	Minimum time prior to driving the vehicle
35 °C (95 °F)	1.5 hours
20 °C (68 °F)	5 hours
5 °C (41 °F)	24 hours

12. INSPECT FOR LEAK AND REPAIR

NOTICE:

Conduct a leak test after the hardening time has elapsed.

13. INSTALL FRONT SIDE OF ROOF HEADLINING

14. INSTALL COWL TOP VENTILATOR LOUVER

HINT:

Check that the 2 clips on the back side of the cowl louver are surely fixed to the body.

15. INSTALL HOOD TO COWL TOP SEAL

16. INSTALL WIPER ARMS

(a) Operate the wiper motor once and turn the wiper switch OFF.

(b) Install the wiper arms and tighten the nuts by hand.

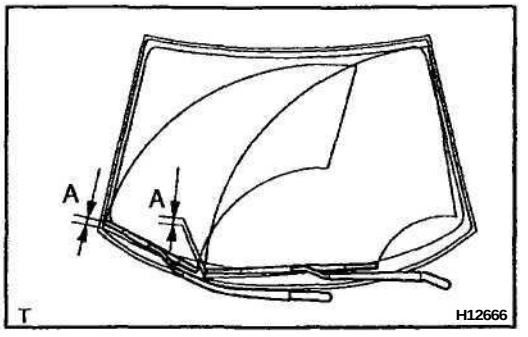

(c) Adjust the installation positions of the wiper arms to the positions as shown in the illustration.

A: 30 ± 7.5 mm (1.8 ± 0.295 in.)

(d) Torque the nuts.

Torque: 32 N·m (323 kgf·cm, 23 ft·lbf)

(e) Install the 2 wiper arm head caps.

17. INSTALL INNER REAR VIEW MIRROR
18. INSTALL SUN VISOR HOLDERS
19. INSTALL SUN VISOR
20. INSTALL MAP LIGHT ASSEMBLY
21. INSTALL FRONT PILLAR GARNISH

QUARTER WINDOW GLASS

COMPONENTS

BO2NT–01

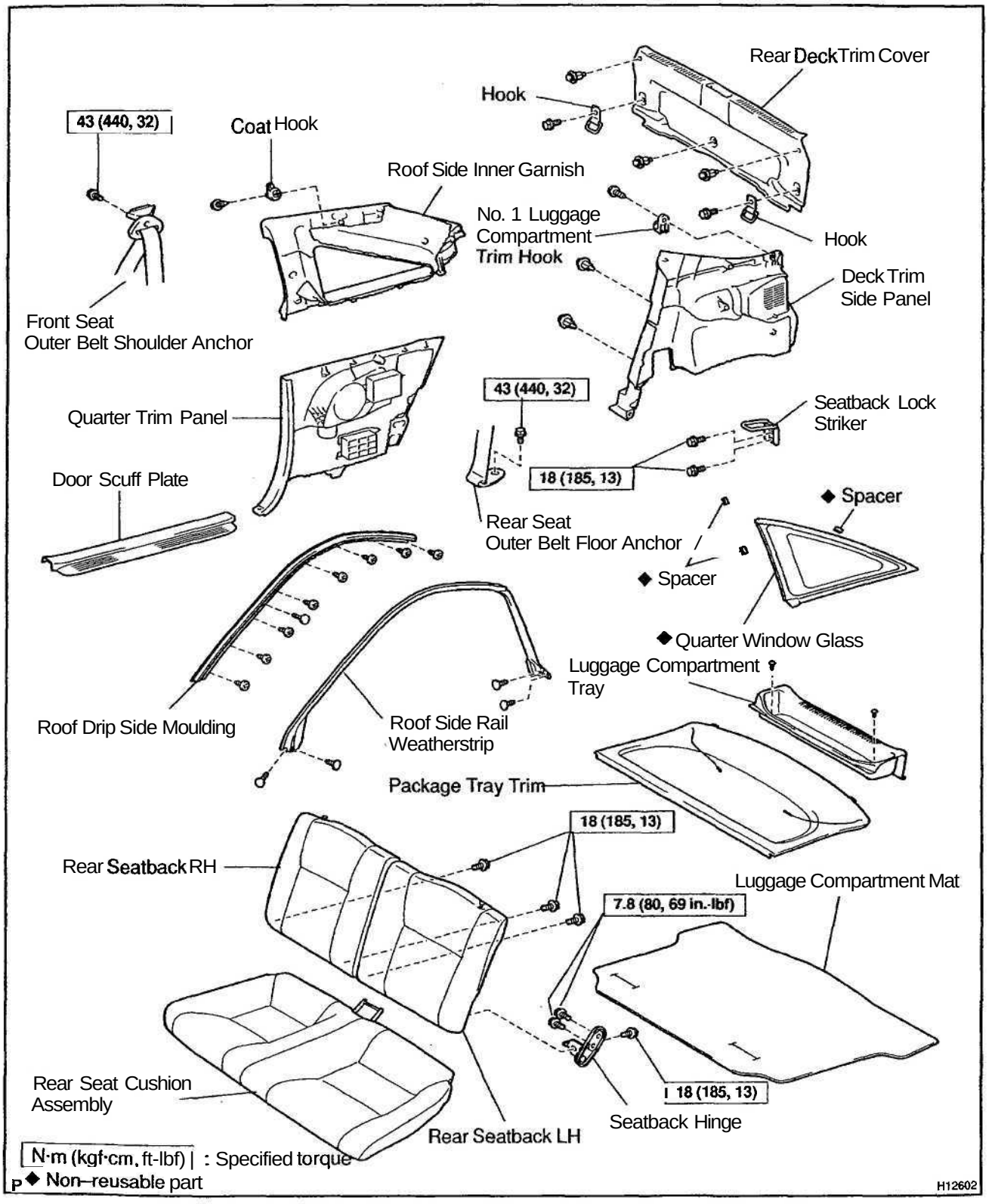

BO2NU-01

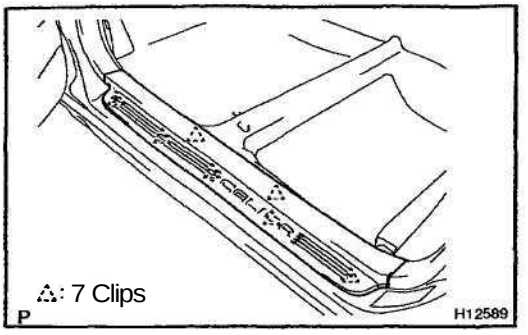

REMOVAL

1. REMOVE DOOR SCUFF PLATE

Using a screwdriver, remove the door scuff plate.

HINT:

Tape the screwdriver tip before use.

2. REMOVE PACKAGE TRAY TRIM

3. REMOVE REAR SEAT (See page BO–102)

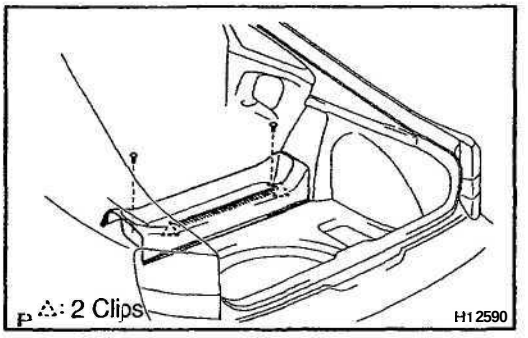

4. REMOVE LUGGAGE COMPARTMENT TRAY

(a) Using a clip remover, remove the 2 clips.

(b) Using a screwdriver, remove the luggage compartment tray.

HINT:

Tape the screwdriver tip before use.

5. REMOVE LUGGAGE COMPARTMENT MAT

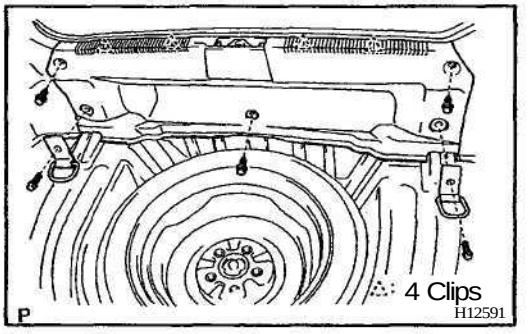

6. REMOVE REAR DECK TRIM COVER

(a) Remove the 2 bolts and 2 hooks.

(b) Remove the 3 clips.

(c) Using a screwdriver, remove the rear deck trim cover.

HINT:

Tape the screwdriver tip before use.

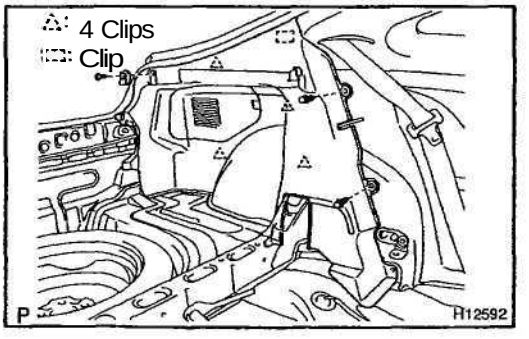

7. REMOVE DECK TRIM SIDE PANEL

(a) Remove the screw and No. 1 luggage compartment trim hook.

(b) RH side:

Using a screwdriver, remove the rear room light, then disconnect the connector.

HINT:

Tape the screwdriver tip before use.

(c) Remove the 2 clips.

(d) Using a screwdriver, remove the deck trim side panel.

HINT:

Tape the screwdriver tip before use.

8. REMOVE REAR SEATBACK HINGE

9. REMOVE REAR SEATBACK LOCK STRIKER

10. REMOVE REAR SEAT OUTER BELT FLOOR ANCHOR

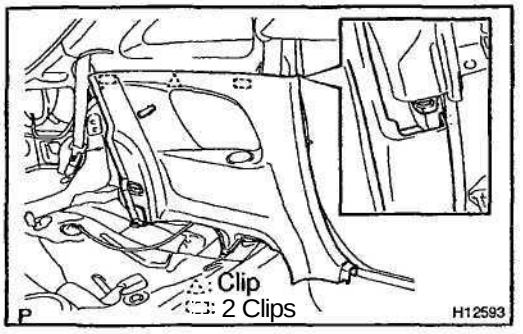

11. REMOVE QUARTER TRIM PANEL

Using a screwdriver, remove the quarter trim panel.

HINT:

Tape the screwdriver tip before use.

12. REMOVE FRONT SEAT OUTER BELT SHOULDER ANCHOR

Torque: 42 N·m (430 kgf·cm, 31ft·lbf)

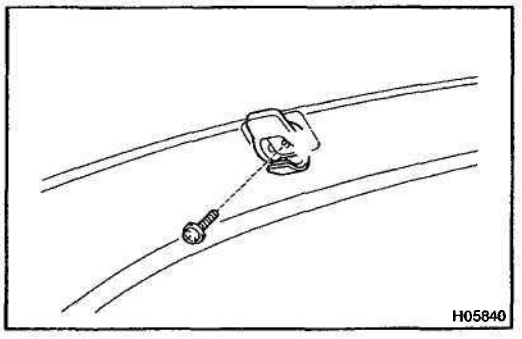

13. REMOVE ROOF SIDE INNER GARNISH

(a) Using a screwdriver, open the cap of coat hook.

HINT:

Tape the screwdriver tip before use.

(b) Remove the screw and coat hook.

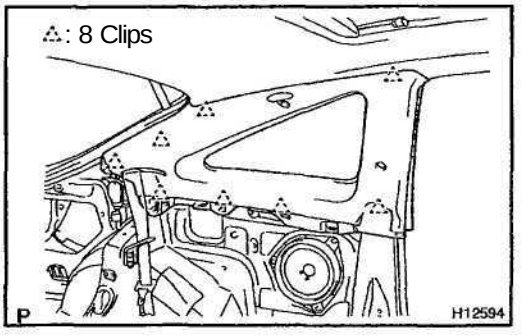

(c) Using a screwdriver, remove the roof side inner garnish.

HINT:

Tape the screwdriver tip before use.

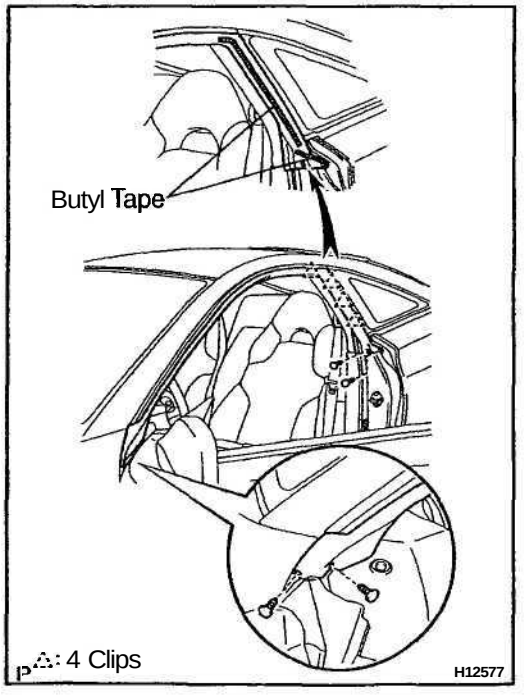

14. REMOVE ROOF SIDE RAIL WEATHERSTRIP

(a) Using a clip remover, remove the 4 clips.

(b) Remove the roof side rail weatherstrip.

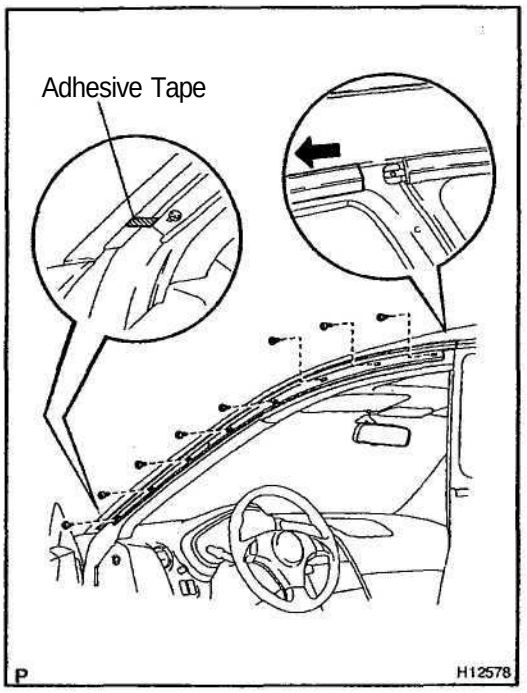

15. REMOVE ROOF DRIP SIDE MOULDING

Remove the 8 screws and roof drip side moulding.

16. REMOVE QUARTER WINDOW GLASS

(a) Using a knife, cut off the moulding as shown in the below illustration.

NOTICE:

Do not damage the body with the knife.

(b) Remove the remaining moulding.

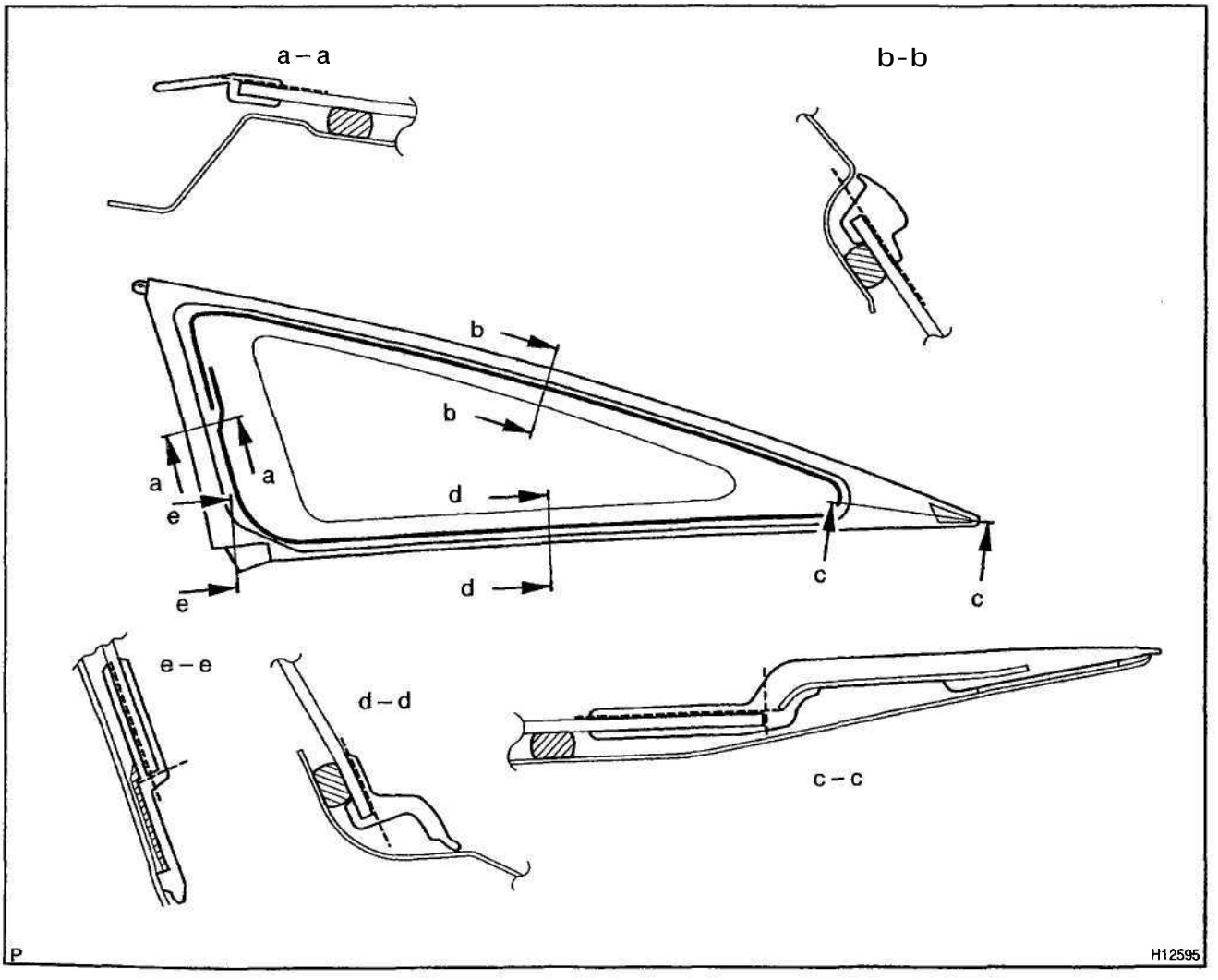

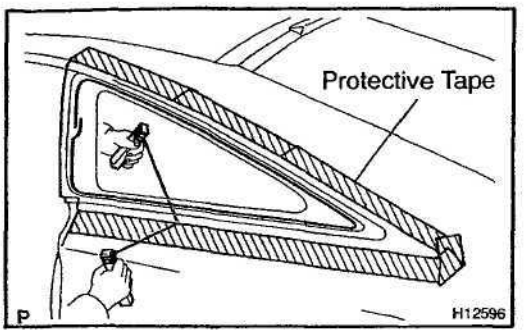

(c) Insert a piano wire between body and glass and let it pass through.

(d) Tie both wire ends to wooden blocks or similar objects.

HINT:

Apply protective tape to the outer surface to keep the surface from being scratched.

NOTICE:

When separating the glass, take care not to damage the paint and exterior.

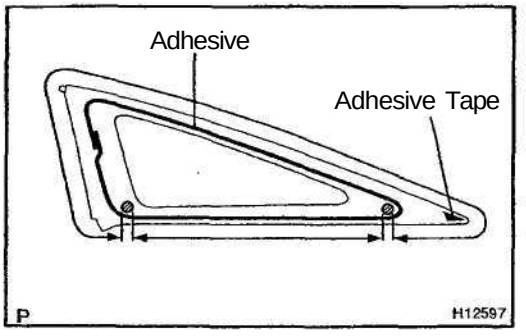

(e) Cut the adhesive by pulling the piano wire around it.

HINT:

Cut the adhesive areas as shown in the illustration, leaving the adhesive where the clips are.

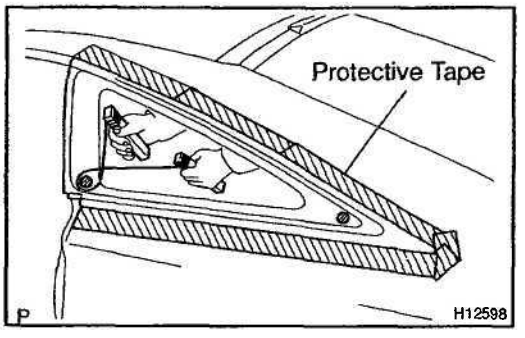

(f) Push the piano wire through as shown in the illustration, cut off the adhered part to the clips.

(g) Remove the glass.

NOTICE:

Leave the adhesive on the body as much as possible when cutting off the glass.

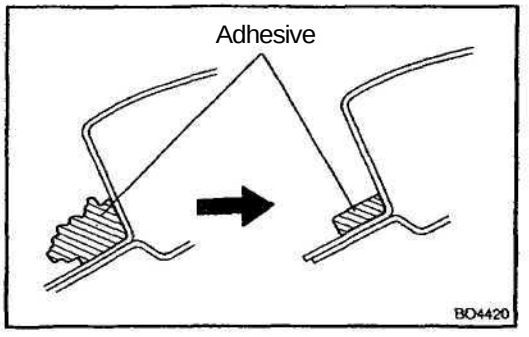

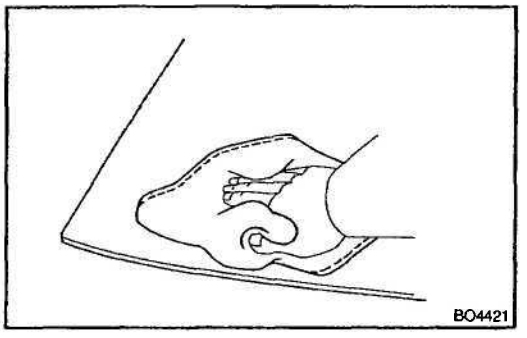

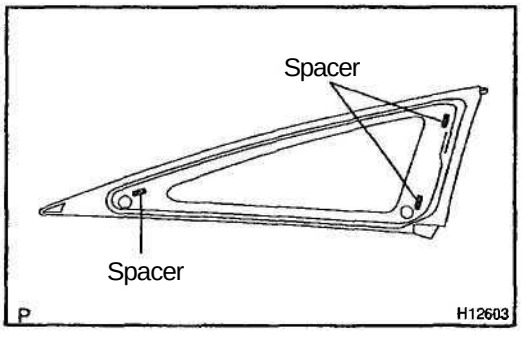

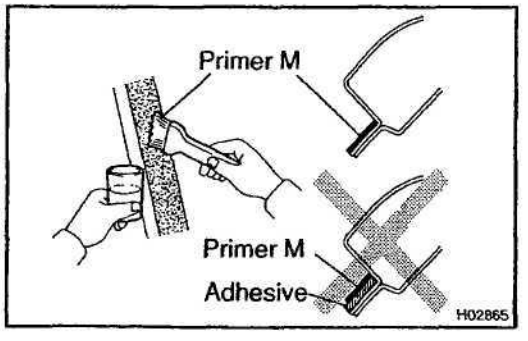

INSTALLATION

1. CLEAN AND SHAPE CONTACT SURFACE OF BODY PANEL

(a) Using a knife, cut away any rough areas on the body.

HINT:

Leave the adhesive on the body as much as possible.

(b) Clean the cut surface of the adhesive with a shop rag saturated in cleaner.

HINT:

Even if all the adhesive has been removed, clean the body.

2. CLEAN CONTACT SURFACE OF NEW GLASS

Using a cleaner, clean the contact surface which is black–colored area around the entire glass rim.

NOTICE:

Do not touch the glass face after cleaning it.

3. INSTALL NEW SPACERS

Install the new spacers to the quarter window glass as shown in the illustration.

4. COAT CONTACT SURFACE OF BODY WITH PRIMER "M"

Using a brush, coat Primer *M* to the exposed part of body on the vehicle side.

NOTICE:

- **Allow 3 minutes or more to dry the primer coated surface.**
- **Do not coat Primer M to the adhesive.**
- **Do not keep any of the opened Primer M for later use.**

5. COAT CONTACT SURFACE OF NEW GLASS WITH PRIMER "G"

(a) Using a brush or sponge, coat the edge of the glass and the contact surface with Primer G as shown in the illustration.

(b) When the primer is coated wrongly to the area other than the specified, wipe it off with a clean shop rag before the primer dries.

NOTICE:

- **Allow 3 minutes or more to dry the primer coated surface.**
- **Do not keep any of the opened Primer G for later use.**

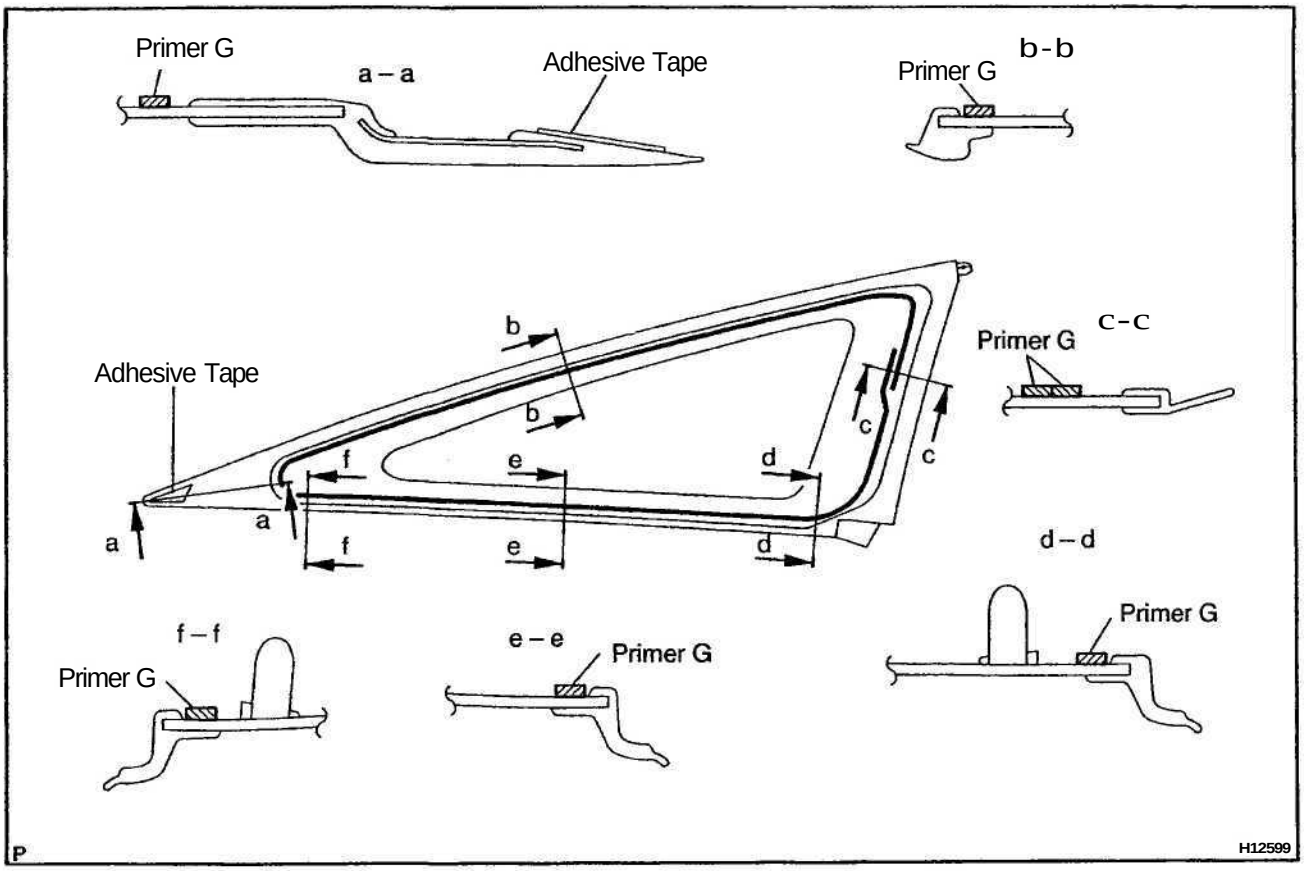

6. APPLY ADHESIVE

(a) Cut off the tip of the cartridge nozzle.
Part No. 08850–00801 or equivalent.

HINT:
After cutting off the tip, use all adhesive within the time described in the table below.

Temperature	Tackfree time
35°C (95°F)	15 minutes
20°C (68°F)	100 minutes
5°C (41°F)	8 hours

(b) Load the cartridge into the sealer gun.

(c) Coat the new glass with adhesive as shown in the illustration.
Adhesive height: 12.0 mm (0.472 in.)
Adhesive width: 8.0 mm (0.315 in.)

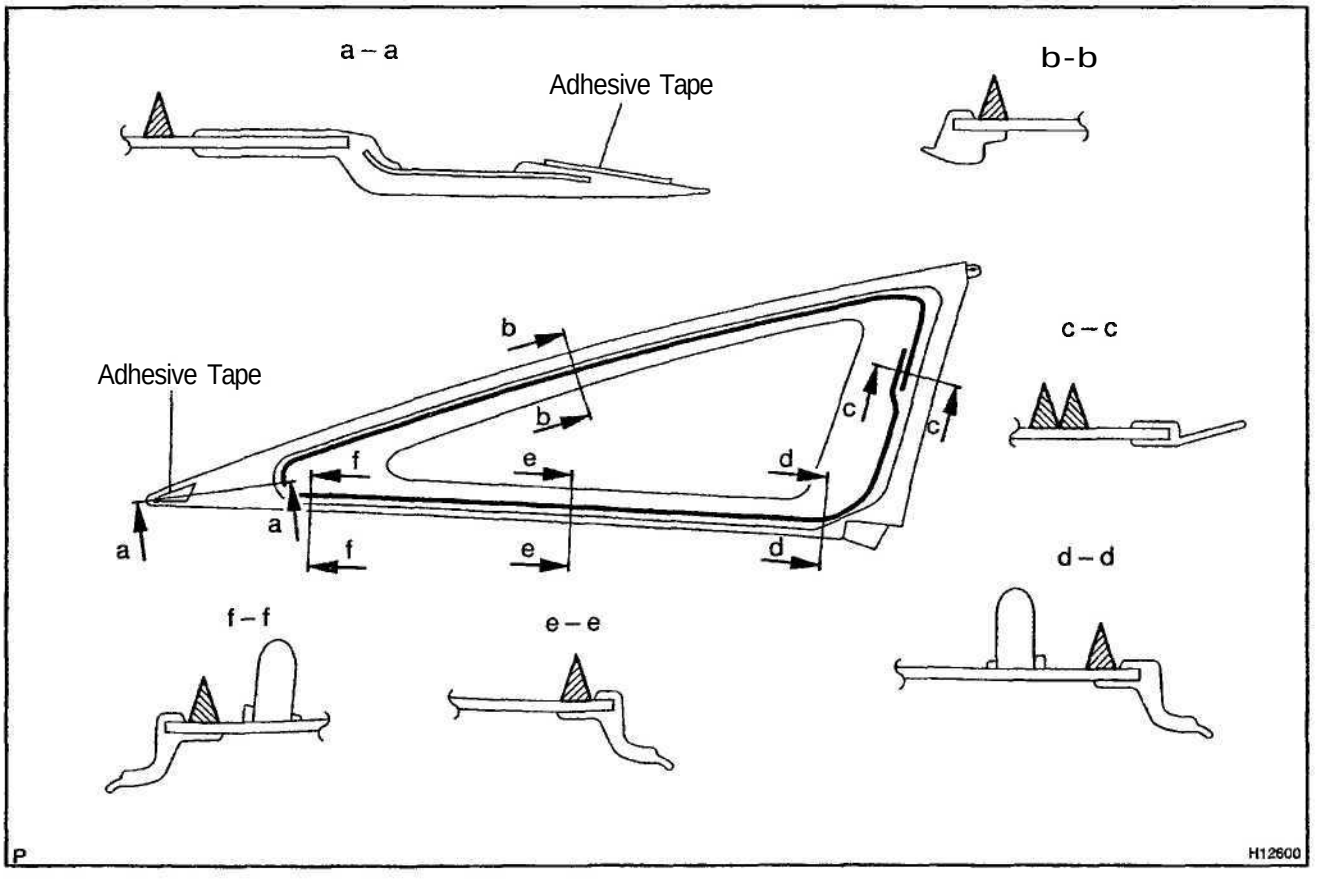

7. INSTALL NEW GLASS

(a) Install new glass to the body.

(b) Hold the glass in place securely with a protective tape or equivalent until the adhesive hardens.

NOTICE:

Take care not to drive the vehicle during the time described **in the table below.**

Temperature	Minimum time prior to driving the vehicle
35°C (95°F)	1.5 hours
20°C (68°F)	5 hours
5°C (41°F)	24 hours

8. INSPECT FOR LEAK AND REPAIR

(a) Conduct a leak test after the hardening time has elapsed.

(b) Seal any leak with sealant.

Part No. 08833–00030 or equivalent.

9. INSTALL ROOF DRIP SIDE MOULDING
(See page BO–40)

10. INSTALL ROOF SIDE RAIL WEATHERSTRIP (See page BO–40)

11. INSTALL ROOF SIDE INNER GARNISH

12. INSTALL FRONT SEAT OUTER BELT SHOULDER ANCHOR
Torque: 43 N·m (440 kgf·cm, 32 ft·lbf)

13. INSTALL QUARTER TRIM PANEL

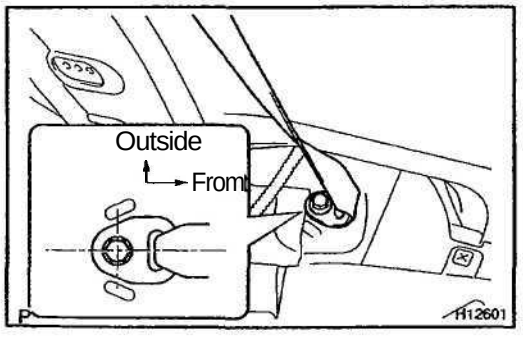

14. INSTALL REAR SEAT OUTER BELT FLOOR ANCHOR
Install the rear seat outer belt floor anchor with the bolts as shown in the illustration.

Torque: 43 N·m (440 kgf·cm, 32 ft·lbf)

15. INSTALL REAR SEATBACK LOCK STRIKER
Torque: 18 N·m (185 kgf·cm, 13 ft·lbf)

16. INSTALL REAR SEATBACK HINGE
Torque: 7.8 N·m (80 kgf·cm, 69 in.·lbf)

17. INSTALL DECK TRIM SIDE PANEL

18. INSTALL REAR DECK TRIM COVER

19. INSTALL LUGGAGE COMPARTMENT MAT

20. INSTALL PACKAGE TRAY TRIM

21. INSTALL REAR SEAT (See page BO–105)

22. INSTALL DOOR SCUFF PLATE

BACK DOOR GLASS
COMPONENTS

BO1EL-02

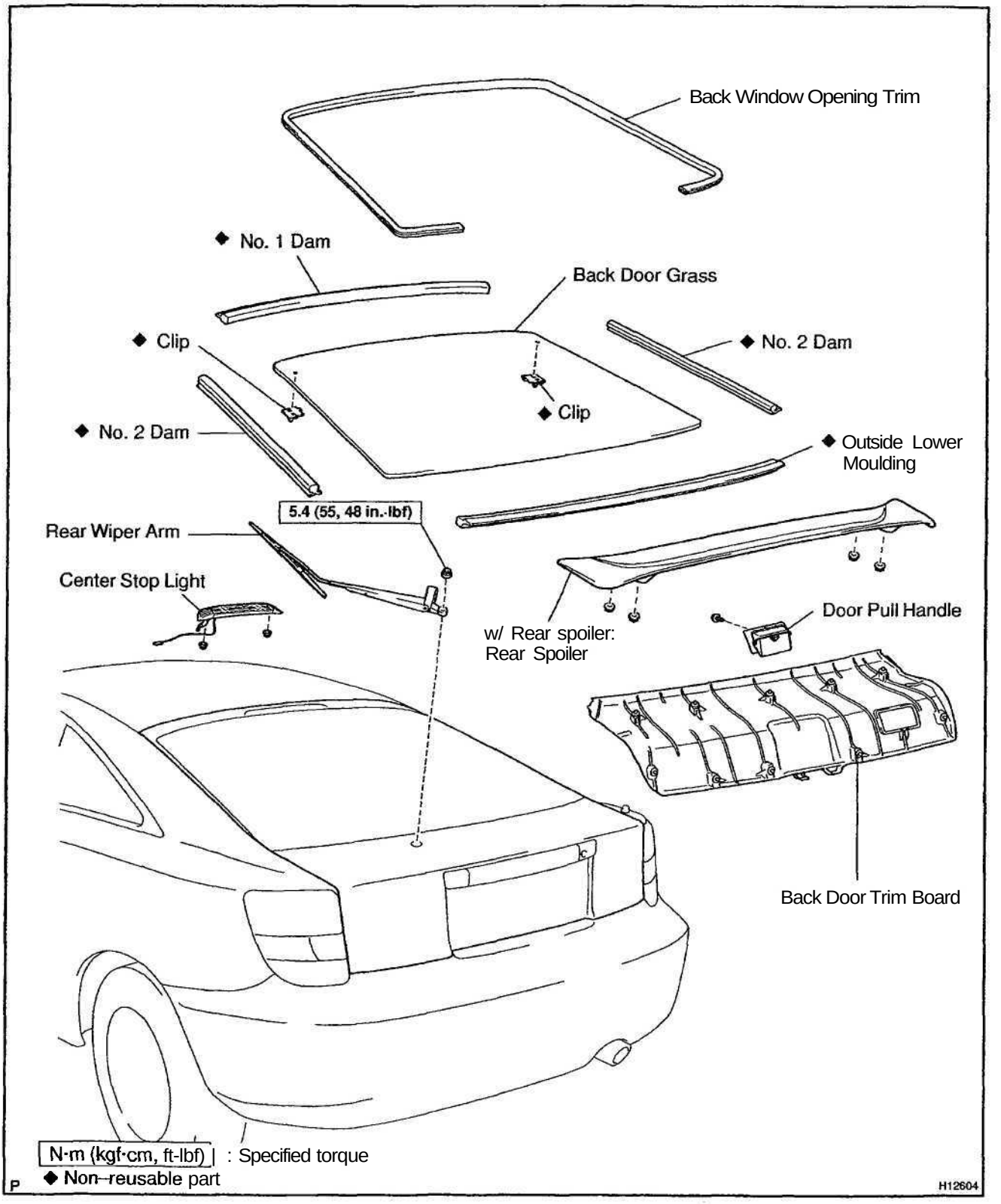

REMOVAL

1. **w/ Rear spoiler:**
   REMOVE REAR SPOILER
2. **REMOVE REAR WIPER ARM**
3. **REMOVE DOOR PULL HANDLE**

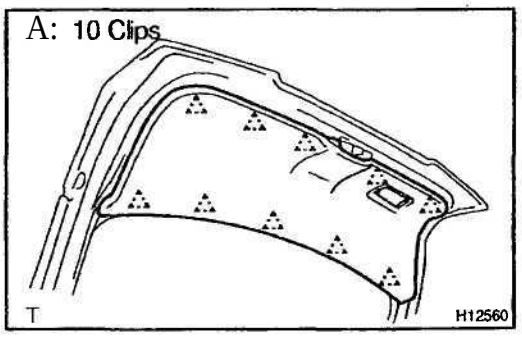

4. REMOVE BACK DOOR TRIM BOARD

Using a screwdriver, remove the back door trim board.

HINT:

Tape the screwdriver tip before use.

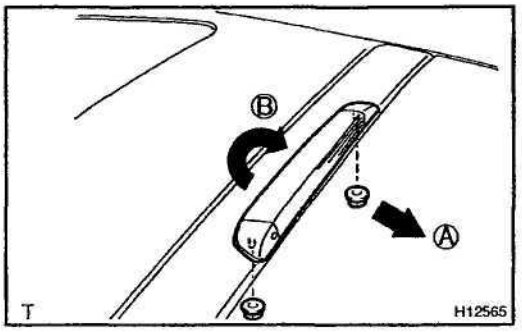

5. **REMOVE CENTER STOP LIGHT**

(a) Remove the 2 nuts.

(b) Disconnect the connector and washer hose, then remove the center stop light in order A, B as shown in the illustration..

6. **REMOVE BACK WINDOW OPENING TRIM**

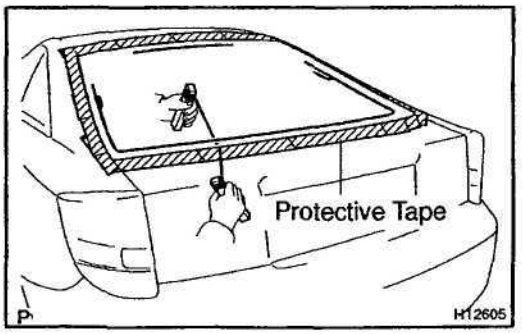

7. **REMOVE BACK DOOR GLASS**

(a) Insert a piano wire between body and glass and let it pass through.

(b) Tie both wire ends to wooden blocks or similar object.

HINT:

Apply protective tape to the outer surface to keep the surface from being scratched.

NOTICE:

When separating the glass, take care not to damage the paint and exterior.

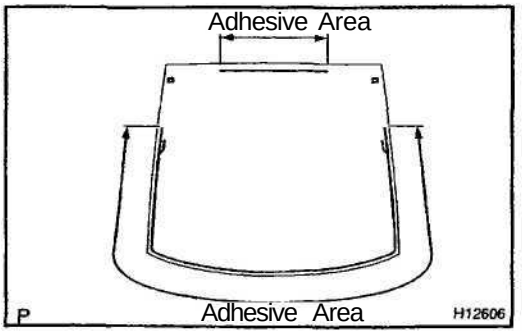

(c) Cut the adhesive by pulling the piano wire around it.

HINT:

Cut the adhesive areas as shown in the illustration.

BO2NX-01

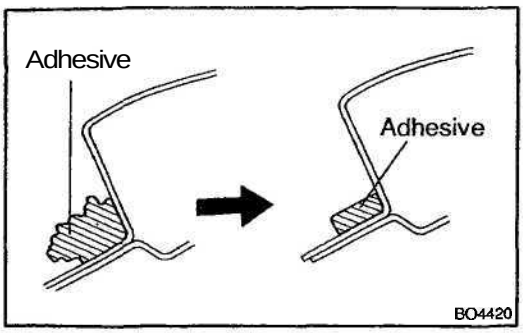

INSTALLATION

1. CLEAN AND SHAPE CONTACT SURFACE OF BODY

(a) Using a knife, cut away any rough areas on the body.

HINT:

Leave the adhesive on the body as much as possible.

(b) Clean the cutting surface of the adhesive with a shop rag saturated in cleaner.

HINT:

Even if all the adhesive has been removed, clean the body.

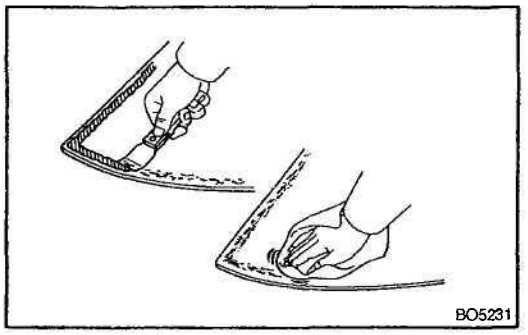

2. CLEAN REMOVED GLASS

(a) Place marks for installing new clips to the glass.

(b) Remove the damaged clips and dams.

(c) Using a scraper, remove the adhesive sticking to the glass.

(d) Clean the glass with cleaner.

NOTICE:

- **Do not touch the glass after cleaning it.**
- **Be careful not to damage the glass.**

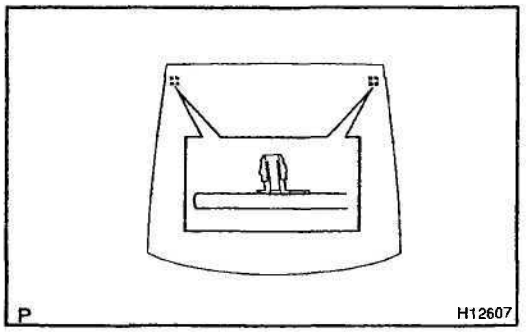

3. If reusing the glass: INSTALL NEW CLIPS

Install new clips onto the glass.

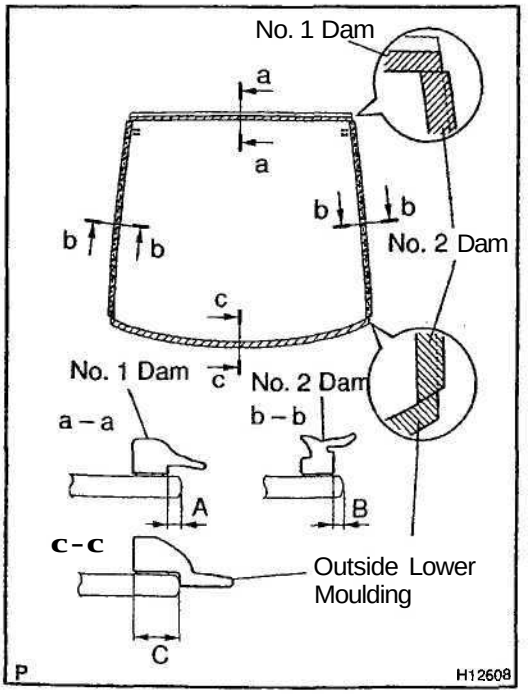

4. INSTALL NEW DAMS AND OUTSIDE LOWER MOULDING

Install new dams and outside lower moulding with adhesive tape as shown in the illustration.

A: 2.5 mm (0.098 in.)
B: 1.7 mm (0.067 in.)
C: 7.5 mm (0.295 in.)

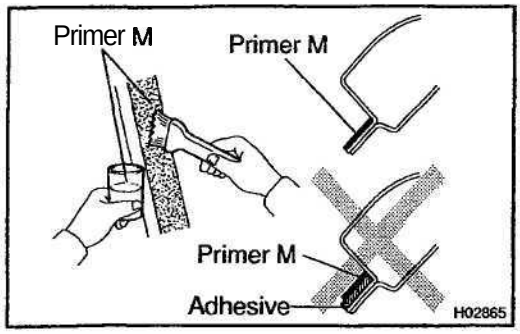

5. COAT CONTACT SURFACE OF BODY WITH PRIMER "M"

Using a brush, coat Primer M to the exposed part of body on the vehicle side.

NOTICE:

- **Allow 3 minutes or more to dry the primer coated surface.**
- **Do not coat Primer M to the adhesive.**
- **Do not keep any of the opened Primer M for later use.**

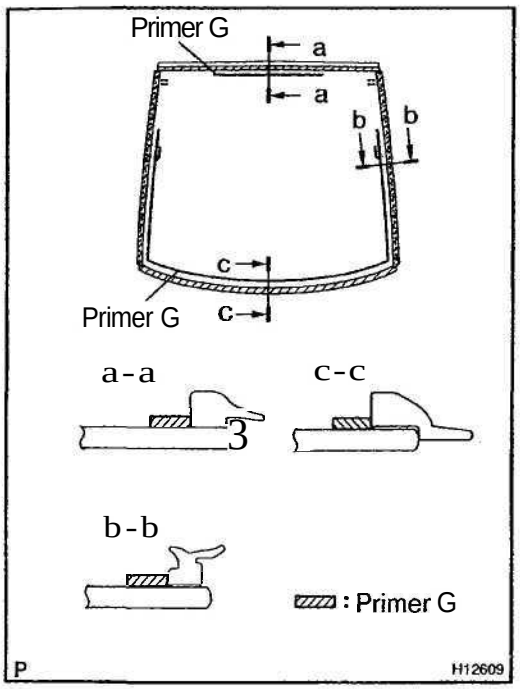

6. COAT CONTACT SURFACE OF GLASS WITH PRIMER "G"

(a) Using a brush or sponge, coat the edge of the glass and the contact surface with Primer G as shown in the illustration.

(b) When the primer is coated wrongly to the area other than the specified, wipe it off with a clean shop rag before the primer dries.

NOTICE:

- **Allow 3 minutes or more to dry the primer coated surface.**
- **Do not keep any of the opened Primer G for later use.**

7. APPLY ADHESIVE

(a) Cut off the tip of the cartridge nozzle.

Part No. 08850–00801 or equivalent

HINT:

After cutting off the tip, use all adhesive within the time described in the table below.

Temperature	Tackfree time
35°C(95°F)	15 minutes
20°C (68°F)	100 minutes
5°C (41°F)	8 hours

(b) Load the cartridge into the sealer gun.

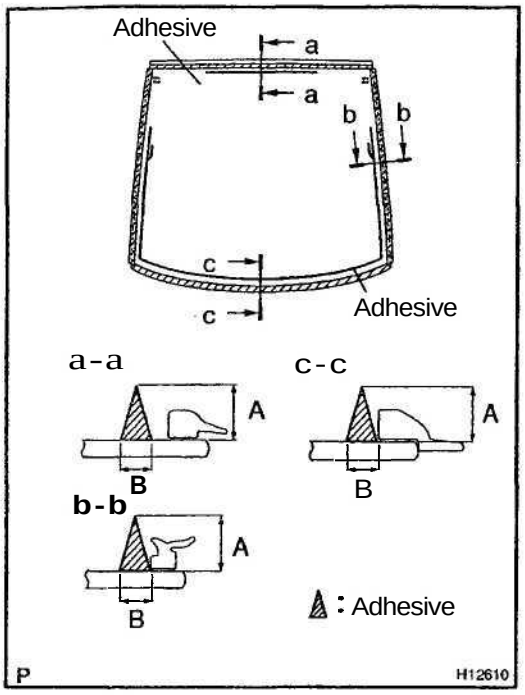

(c) Coat the glass with adhesive as shown in the illustration.
A: 12.0 mm (0.472 in.)
B: 8.0 mm (0.315 in.)

8. INSTALL BACK DOOR GLASS

(a) Install the back door glass to the back door.

HINT:

Confirm that the dams is attached to the back door panel.

(b) Hold the back door glass in place securely with a protective tape or equivalent until the adhesive hardenes.

NOTICE:

Take care not to drive the vehicle during the time described in the table below.

Temperature	Minimum time prior to driving the vehicle
35°C (95°F)	1.5 hours
20°C (68°F)	5 hours
5°C (41°F)	24 hours

9. INSPECT FOR LEAKS AND REPAIR

NOTICE:

Conduct a leak test after the hardening time has elapsed.

10. INSTALL BACK WINDOW OPENING TRIM

11. INSTALL CENTER STOP LIGHT

12. INSTALL BACK DOOR TRIM BOARD

13. INSTALL DOOR PULL HANDLE

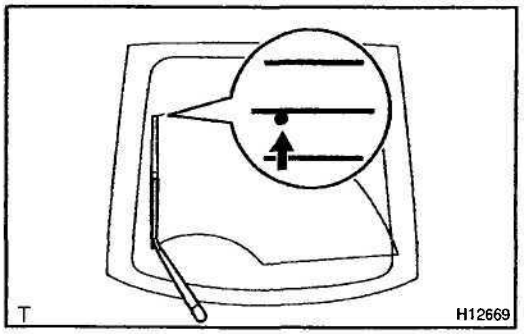

14. INSTALL REAR WIPER ARM

(a) Operate the wiper motor once and turn the wiper switch OFF.

(b) Install the rear wiper arm and tighten the nut by hand.

(c) Adjust the installation position of the wiper arm at a point in defogger pattern.

(d) Tighten the nut.
Torque: 5.4 N·m (55 kgf·cm, 48 in.·lbf)

15. w/ Rear spoiler:
REMOVE REAR SPOILER

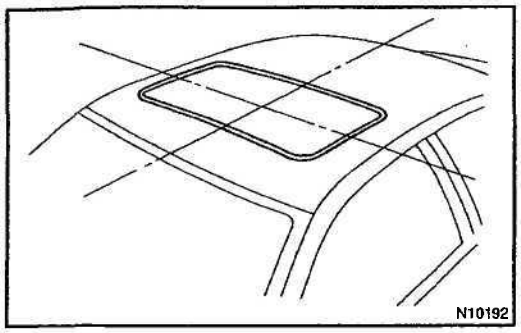

SLIDING ROOF

ON–VEHICLE INSPECTION

BO2NY-01

INSPECT SLIDING ROOF GLASS ALIGNMENT

(a) Start the engine and check the operation time of the sliding roof.
Operation time:
Approx. 6 secs.

(b) Check for abnormal noise or binding during operation.

(c) With the sliding roof fully closed, check for water leakage.

(d) Check for a difference in level between the sliding roof weatherstrip and roof panel.
Except rear end:
0 ± 1.5 mm (0 ± 0.059 in.)
Rear end:
0 + 1.5 mm (0 + 0.059 in.)
0 – 1.0 mm (0 – 0.039 in.)

BO2N2-01

COMPONENTS

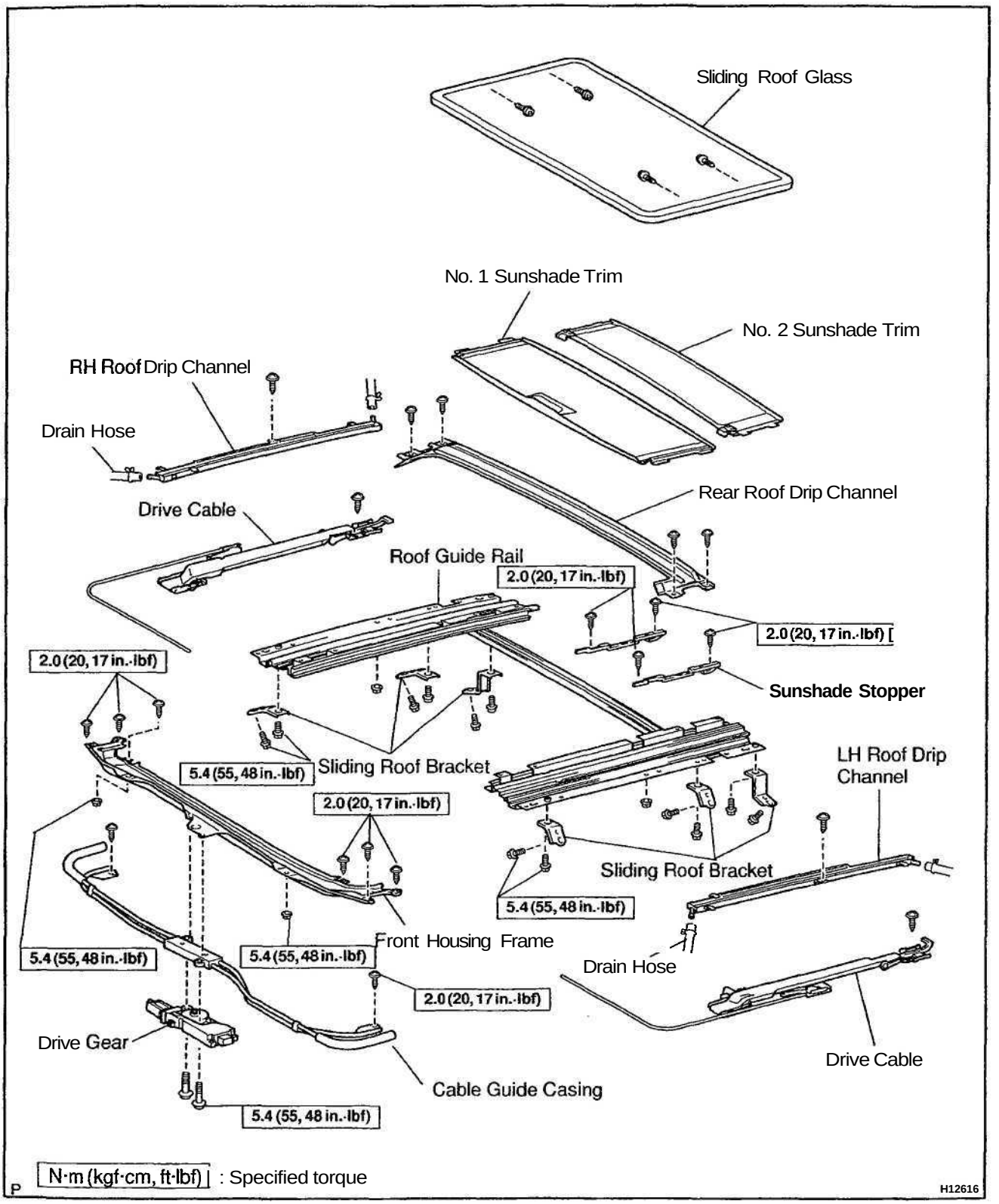

B0200-01

REMOVAL

1. REMOVE ROOF HEADLINING
(See page BO–88)

2. REMOVE SLIDING ROOF GLASS

(a) Remove the 4 screws.
(b) Pull the glass upward to remove it.

3. REMOVE DRIVE GEAR

NOTICE:
Remove the drive gear with the sliding roof fully closed.

(a) Remove the 2 screws and room light bracket.
(b) Disconnect the connector.
(c) Remove the 2 bolts and drive gear.
Torque: 5.4 N·m (55 kgf·cm, 48 ft·lbf)

4. REMOVE SLIDING ROOF HOUSING

(a) Disconnect the 4 drain hoses from the housing.
(b) Remove the 12 bolts and 6 brackets.
Torque: 5.4 N·m (55 kgf·cm, 48 tt-lbf)
(c) Remove the 4 nuts, then remove the housing.
Torque: 5.4 N·m (55 kgf·cm, 48 ft-lbf)

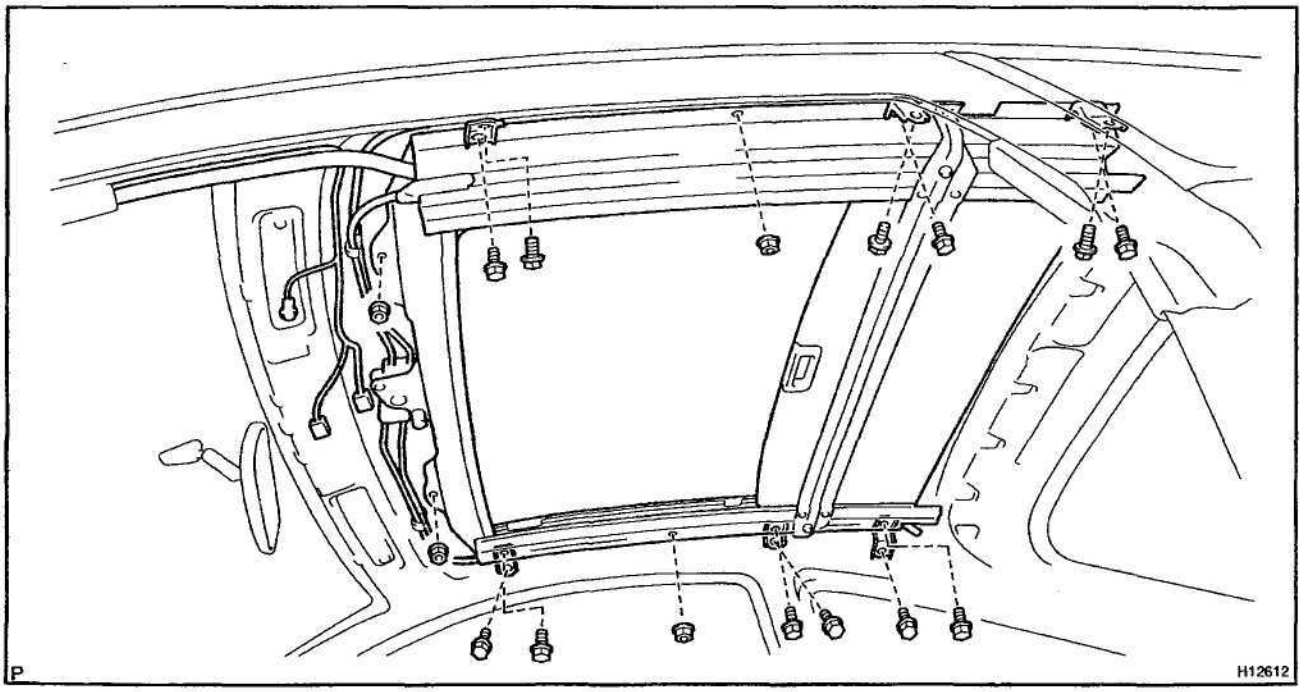

BO201-01

DISASSEMBLY

1. REMOVE SUNSHADE STOPPERS
   Torque: 2.0 N·m (20 kgf·cm, 17 in.·lbf)
2. REMOVE NO. 1 AND NO. 2 SUNSHADE TRIMS

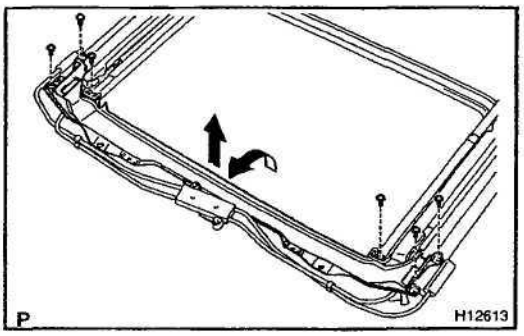

3. REMOVE FRONT HOUSING FRAME

Remove the 6 screws and front housing frame as shown in the illustration.

Torque: 2.0 N·m (20 kgf·cm, 17 in.·lbf)

4. REMOVE REAR ROOF DRIP CANNEL

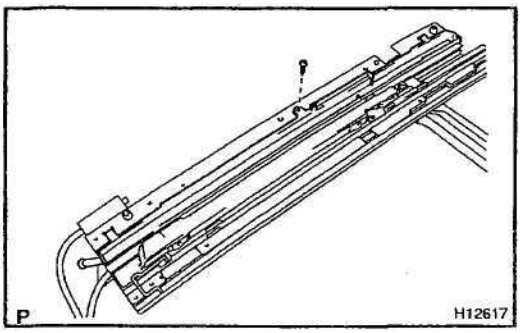

5. REMOVE LH AND RH ROOF DRIP CHANNEL
6. REMOVE CABLE GUIDE CASING
   Torque: 2.0 N·m (20 kgf-cm, 17 in.·lbf)

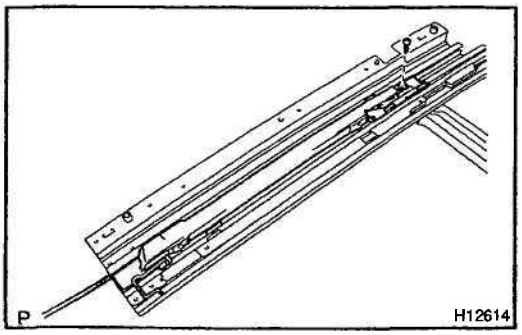

7. REMOVE DRIVE CABLE

(a) Remove the screw.
(b) Slide the drive cable rearward, then remove it.
(c) Employ the same manner described above to the other side.

HINT:

At the time of reassembly, please refer to the following items.

- Adjust the drive cable to a closed and tilted down position.

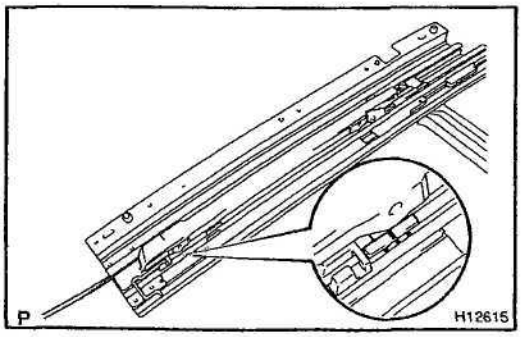

- Slide the cable forward or backward to align the 2 marks as shown in the illustration.

BO2O2-01

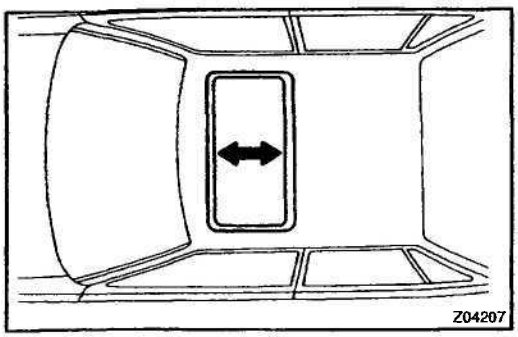

ADJUSTMENT

1. **ADJUST SLIDING ROOF GLASS FORWARD OR REARWARD**

(a) Loosen the sliding roof glass installation bolts.

(b) Adjust the slide roof glass forward or rearward.

2. **ADJUST SLIDING ROOF GLASS IN CLEARANCE (Difference in left and right clearance)**

(a) When the front or rear alignment is not correct, remove the drive gear and sliding roof glass, then adjust the drive cables.

NOTICE:

Remove the drive gear with the sliding roof fully closed.

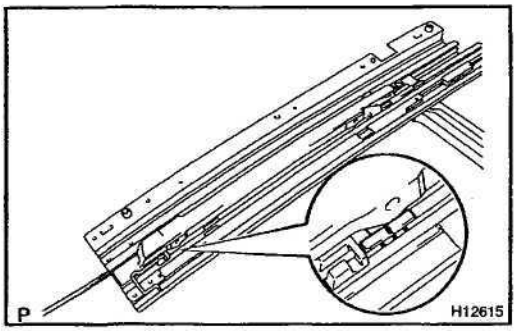

(b) Adjust by sliding the cables forward or rearward to align the 2 marks as shown in the illustration.

(c) Install the drive gear and sliding roof glass.

REASSEMBLY

Reassembly is in the reverse order of disassembly (See page BO-72).

INSTALLATION

Installation is in the reverse order of removal (See page BO–88).

HINT:

After installing the sliding roof, sliding roof need to be re–initialized.
Refer to BE–84.

INSTRUMENT PANEL
COMPONENTS

BO1EV–02

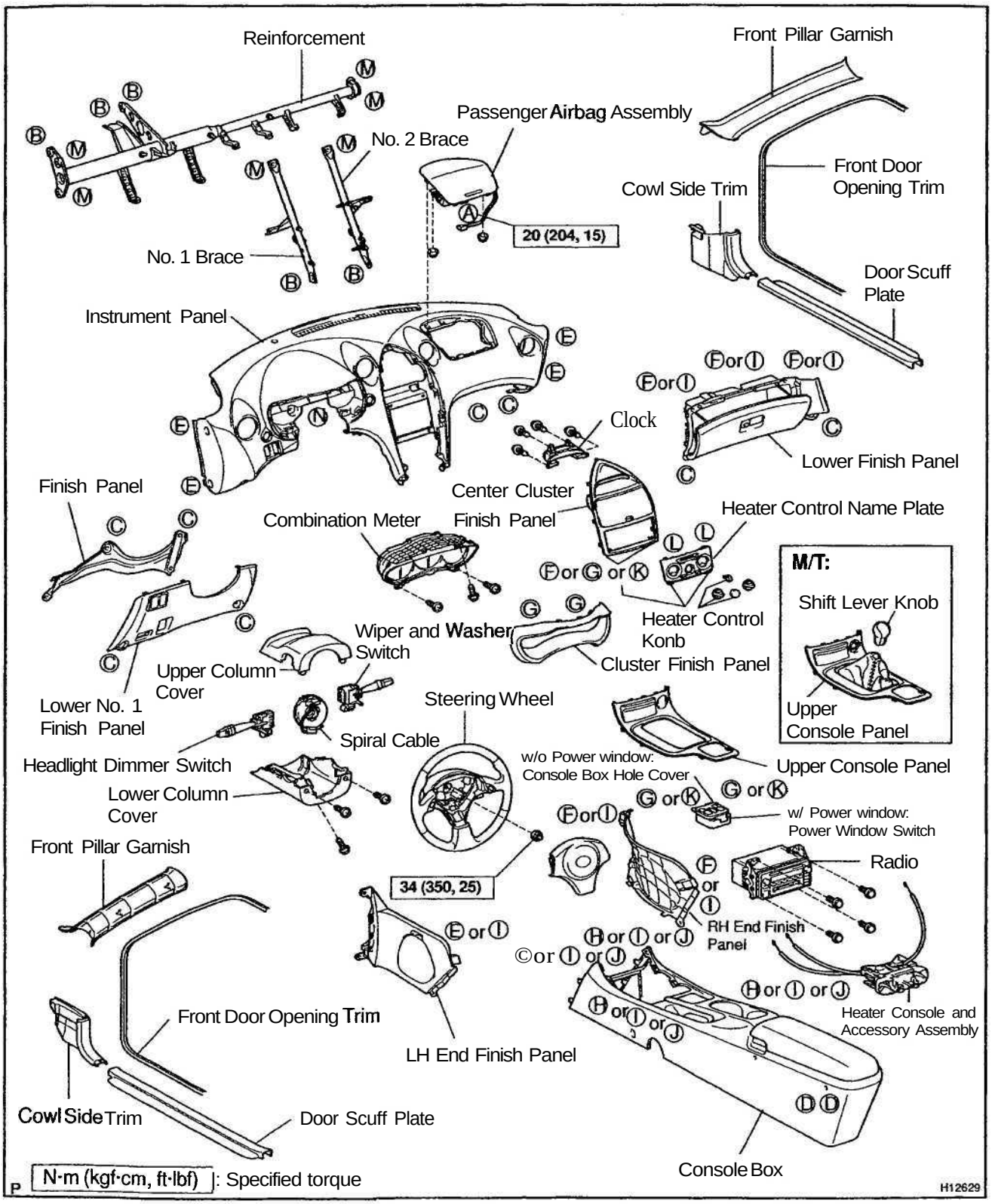

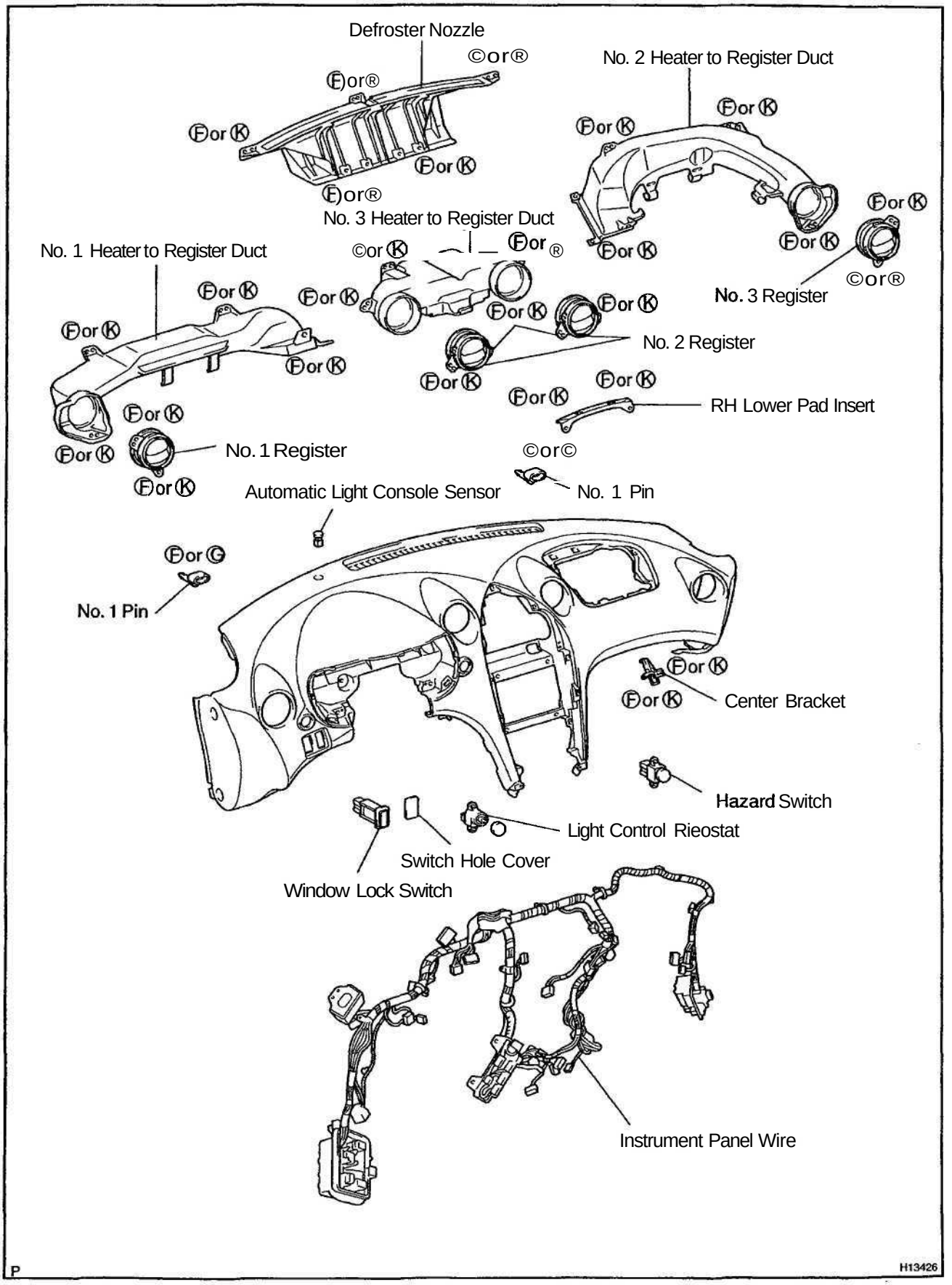
Defroster Nozzle
©or®
Ⓕor®
Ⓕor Ⓚ
Ⓕor Ⓚ
Ⓕor®
No. 2 Heater to Register Duct
Ⓕor Ⓚ
Ⓕor Ⓚ
Ⓕor Ⓚ
Ⓕor Ⓚ
Ⓕor Ⓚ
No. 3 Register
©or®
No. 3 Heater to Register Duct
©or Ⓚ
Ⓕor ®
No. 1 Heater to Register Duct
Ⓕor Ⓚ
Ⓕor Ⓚ
Ⓕor Ⓚ
Ⓕor Ⓚ
Ⓕor Ⓚ
Ⓕor Ⓚ
Ⓕor Ⓚ
No. 2 Register
Ⓕor Ⓚ
Ⓕor Ⓚ
Ⓕor Ⓚ
RH Lower Pad Insert
Ⓕor Ⓚ
No. 1 Register
Ⓕor Ⓚ
©or©
No. 1 Pin
Automatic Light Console Sensor
Ⓕor Ⓖ
No. 1 Pin
Ⓕor Ⓚ
Ⓕor Ⓚ
Center Bracket
Hazard Switch
Light Control Rieostat
Switch Hole Cover
Window Lock Switch
Instrument Panel Wire

P

H13426

HINT:
Screw shapes and sizes are indicated in the table below. The codes ("A" - "N") correspond to those indicated on the previous page.

mm (in.)

	Shape	Size		Shape	Size		Shape	Size
®	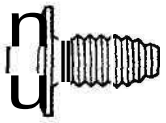	0 = 8 (0.32) L- 16 (0.63)	®	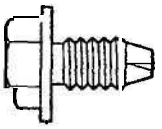	0 = 8 (0.32) L - 15 (0.59)	©	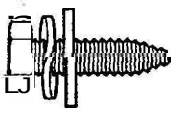	0 = 6 (0.24) L - 22 (0.87)
©	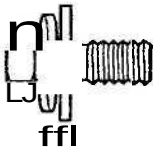	0 = 6 (0.24) L- 16 (0.63)	©	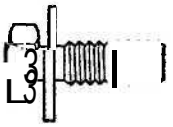	0 = 6 (0.24) L- 18 (0.71)	©		0 = 5.22 (0.2055) L- 16 (0.63)
■		0 =5.22 (0.2055) L=16 (0.63)	—		0 = 5 (0.20) L=18 (0.71)	Ⓘ	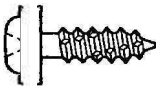	0 = 5 (0.20) L = 16 (0.63)
Ⓙ		0 = 5 (0.20) L=16 (0.63)	—		ø = 5 (0.20) L=14 (0.55)	Ⓛ	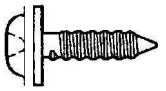	0 = 4 (0.16) L=16 (0.63)
®	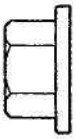	0 = 8 (0.32)	®		0 = 6 (0.24)			

P

H12659

REMOVAL

1. **REMOVE STEERING WHEEL PAD AND STEERING WHEEL (See page SR–11)**
2. **REMOVE DOOR SCUFF PLATE**
3. **REMOVE COWL SIDE TRIM**

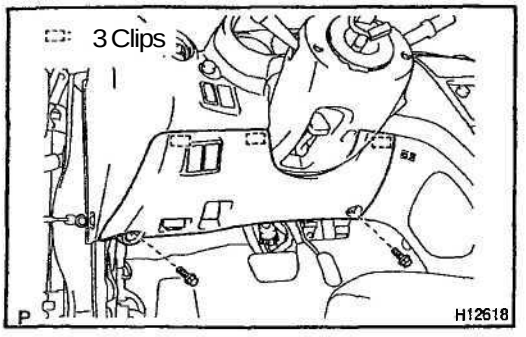

4. **REMOVE LOWER NO. 1 FINISH PANEL**

(a) Remove the 2 screws and hood lock release lever.

(b) Remove the 2 bolts.

(c) Using a screwdriver, remove the lower No. 1 finish panel.

HINT:

Tape the screwdriver tip before use.

5. **REMOVE FINISH PANEL**
6. **REMOVE COLUMN COVERS (See page SR-11)**
7. **REMOVE SPIRAL CABLE (See page SR–11)**
8. **REMOVE WIPER AND WASHER SWITCH AND LIGHT CONTROL SWITCH AND HEADLIGHT DIMMER SWITCH (See page SR–11)**

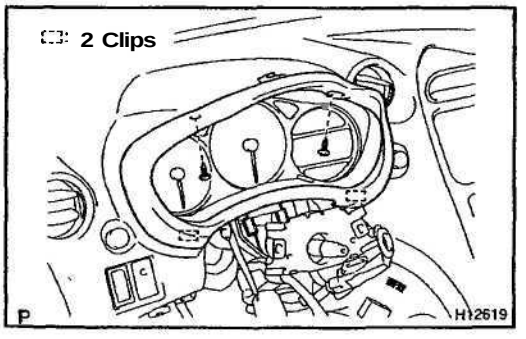

9. **REMOVE CLUSTER FINISH PANEL**

(a) Remove the 2 screws.

(b) Using a screwdriver, remove the cluster finish panel.

HINT:

Tape the screwdriver tip before use.

10. **REMOVE COMBINATION METER**

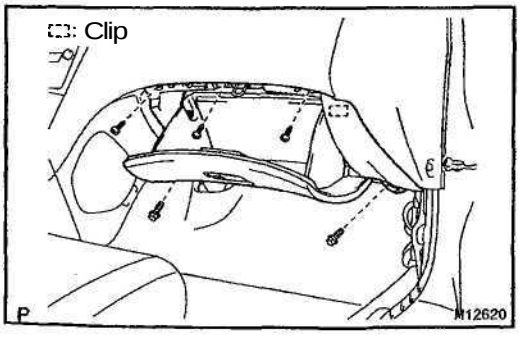

11. **REMOVE LOWER FINISH PANEL**

(a) Remove the 2 bolts and 3 screws.

(b) Using a screwdriver, disconnect the lower finish panel.

HINT:

Tape the screwdriver tip before use.

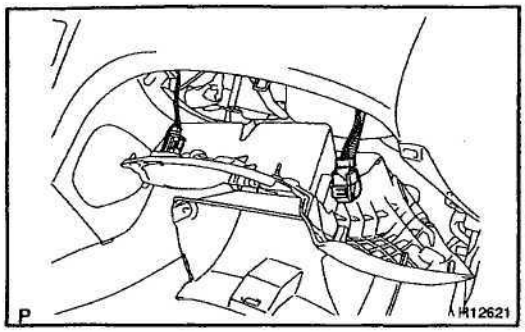

(c) Using a clip remover, disengage the airbag connector clamp.
(d) Disconnect the connector, then remove the lower finish panel.

12. DISCONNECT PASSENGER AIRBAG CONNECTOR

Disconnect the passenger airbag connector.

NOTICE:

When disconnecting the airbag connector, take care not to damage the airbag wire harness.

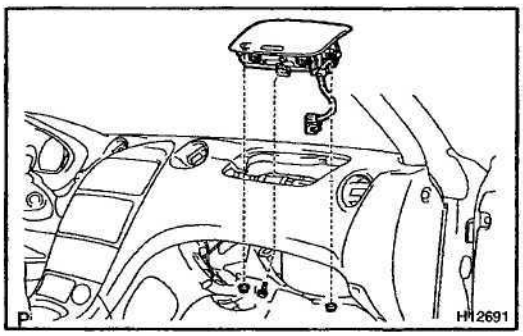

13. REMOVE PASSENGER AIRBAG ASSEMBLY

Remove the bolt, 2 nuts, and passenger airbag assembly.

Torque:
Bolt: 20 N·m (204 kgf·cm, 15 ft·lbf)

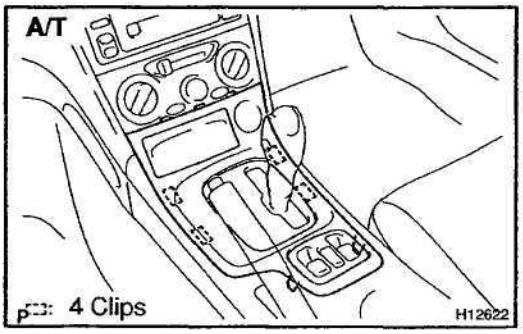

14. REMOVE UPPER CONSOLE PANEL

(a) M/T:
Remove the shift lever knob.
(b) Using a screwdriver, remove the upper console panel, the disconnect the connector.

HINT:

Tape the screwdriver tip before use.

15. w/ Power window:
REMOVE POWER WINDOW CONTROL SWITCH

16. w/o Power window:
REMOVE CONSOLE BOX HOLE COVER

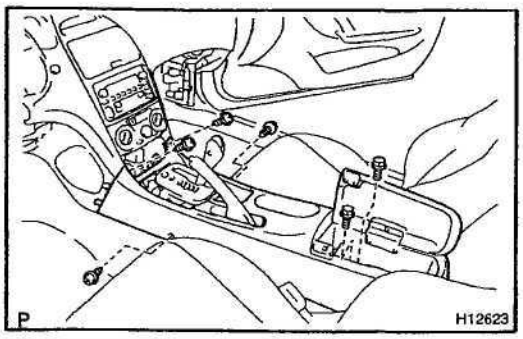

17. REMOVE CONSOLE BOX

(a) Remove the box bottom mat.
(b) Remove the 2 bolts, 4 screws and console box.

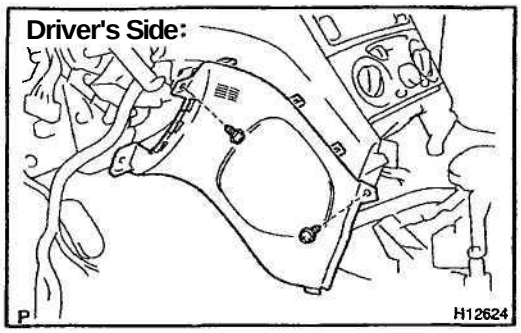

18. REMOVE END FINISH PANELS

(a) Driver's side:
Remove the 2 screws.

(b) Passenger's side:
Remove the screws.

(c) Using a screwdriver, remove the end finish panels.

HINT:

Tape the screwdriver tip before use.

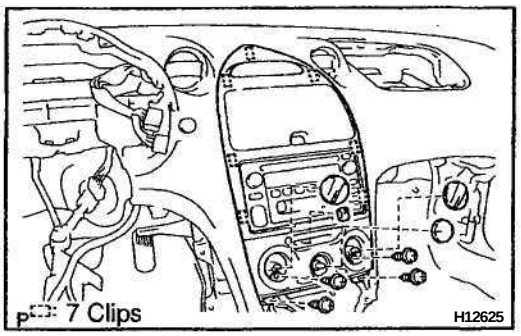

19. REMOVE CENTER CLUSTER FINISH PANEL WITH HEATER CONTROL NAME PLATE

(a) Remove the heater control knobs.

(b) Remove the 4 screws.

(c) Using a screwdriver, remove the center cluster finish panel with heater control name plate, then disconnect the connector.

HINT:

Tape the screwdriver tip before use.

(d) Remove the 4 screws and clock from the center cluster finish panel.

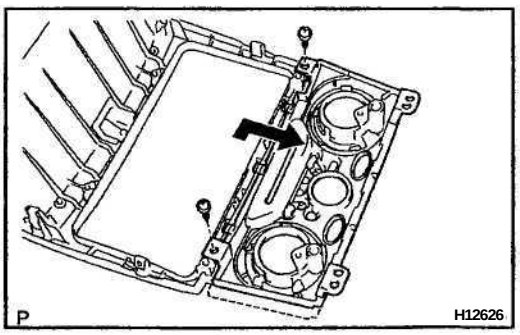

(e) Remove the 2 screws and heater control name plate from the center cluster finish panel as shown in the illustration.

20. w/ Radio:
REMOVE RADIO

21. w/o Radio:
REMOVE STEREO OPENING COVER ASSEMBLY

22. REMOVE HEATER CONTROL AND ACCESSORY ASSEMBLY (See page AC–66)

23. REMOVE STEERING COLUMN (See page SR–11)

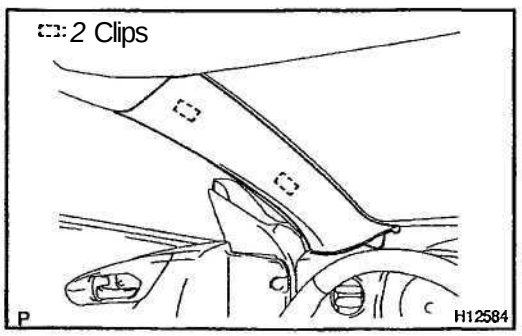

24. REMOVE FRONT PILLAR GARNISH

(a) Using a screwdriver, remove the front pillar garnish.

HINT:

Tape the screwdriver tip before use.

(b) Employ the same manner described above to the other side.

25. REMOVE FRONT DOOR OPENING TRIM

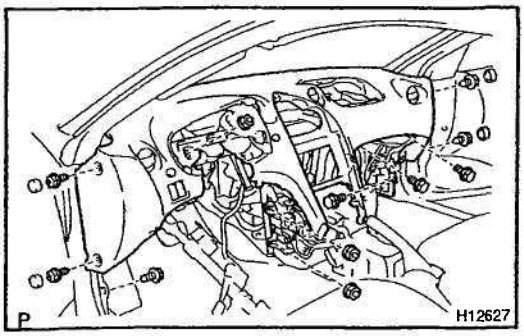

26. REMOVE INSTRUMENT PANEL

(a) Disconnect the connectors.
(b) Disengage the wire harness clamps.
(c) Remove the J/B set bolts and nuts.
(d) Using a screwdriver, remove the 4 caps.

HINT:

Tape the screwdriver tip before use.

(e) Remove the 2 bolts, nut, 4 screws and instrument panel.

27. REMOVE NO. 1 AND NO. 2 BRACE

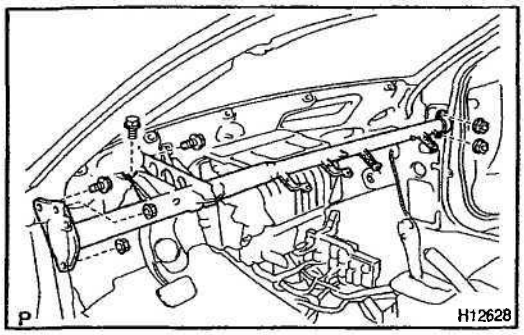

28. REMOVE REINFORCEMENT

(a) **w/ ABS:**
Remove the 2 nuts and ABS ECU.
(b) Remove the 3 bolts, 4 nuts and reinforcement.

BO206-01

DISASSEMBLY

1. REMOVE NO. 1 PINS
2. REMOVE INSTRUMENT PANEL WIRE
3. REMOVE DEFROSTER NOZZLE
4. REMOVE NO. 1 HEATER TO REGISTER DUCT
5. REMOVE NO. 2 HEATER TO REGISTER DUCT
6. REMOVE NO. 3 HEATER TO REGISTER DUCT
7. REMOVE AUTOMATIC LIGHT CONTROL SENSOR
8. REMOVE LIGHT CONTROL RHEOSTAT
9. REMOVE HAZARD SWITCH
10. REMOVE WINDOW LOCK SWITCH
11. REMOVE SWITCH HOLE COVER
12. REMOVE NO. 1 RESISTER
13. REMOVE NO. 2 RESISTERS
14. REMOVE NO. 3 RESISTERS
15. REMOVE RH LOWER PAD INSERT
16. REMOVE CENTER BRACKET

REASSEMBLY

Reassembly is in the reverse order of disassembly (See page BO–83).

INSTALLATION

Installation is in the reverse order of removal (See page BO–79).

ROOF HEADLINING

COMPONENTS

BO2O9-01

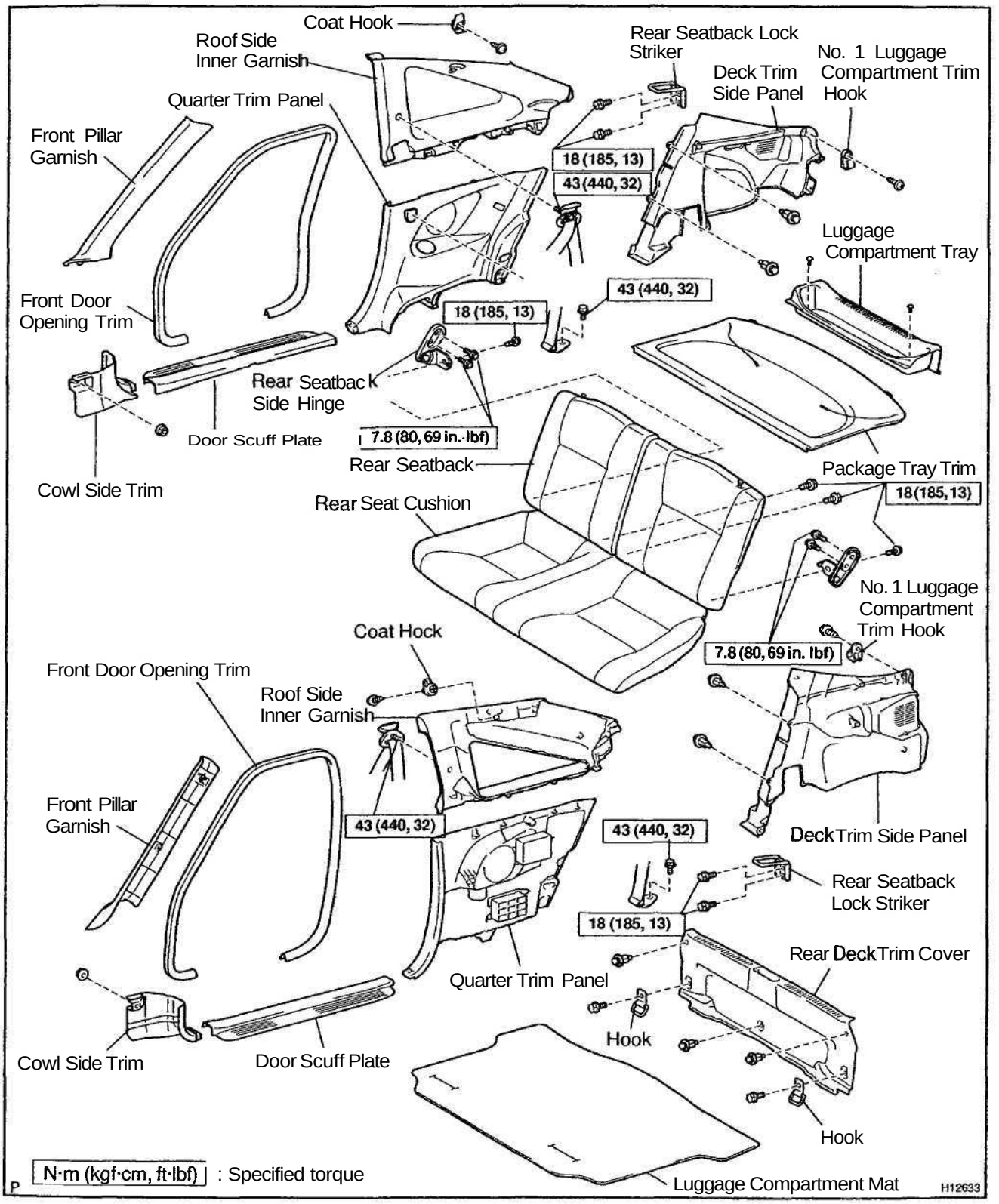

w/o Sliding roof:

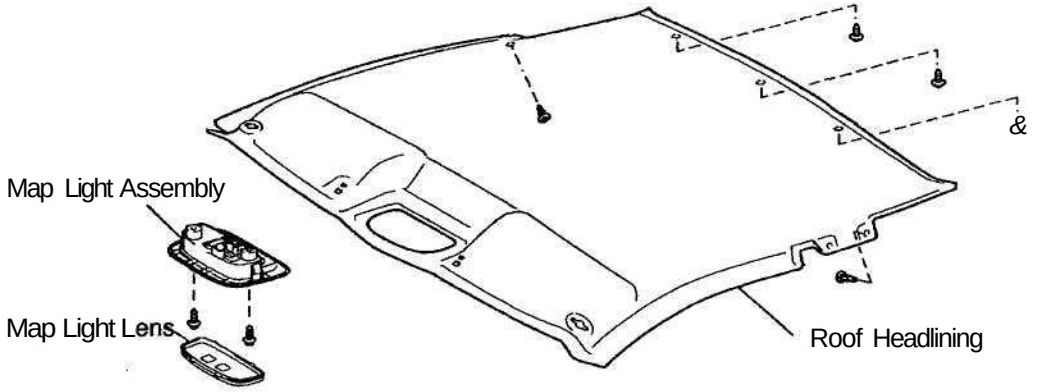

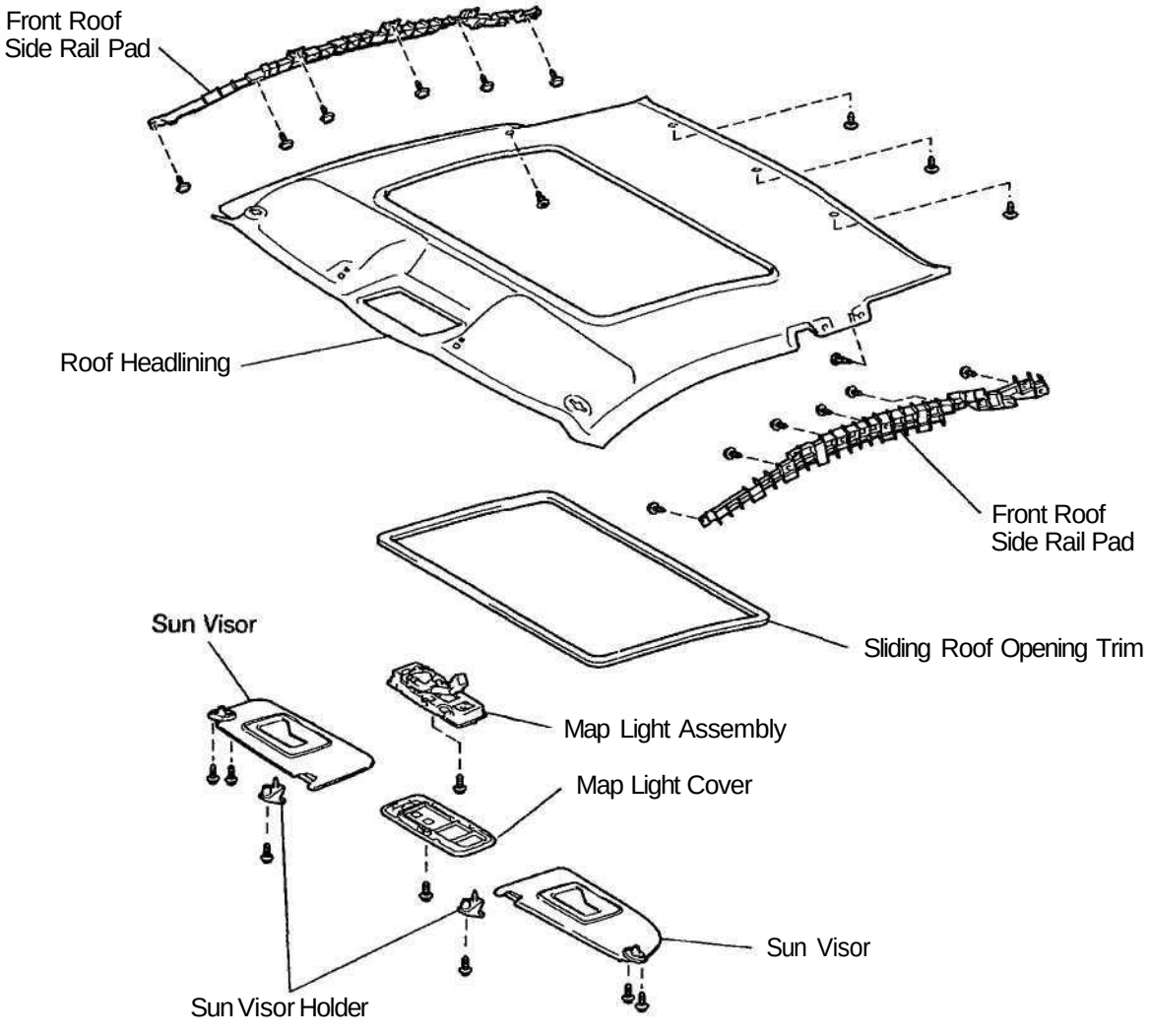

H12652

BO20A-01

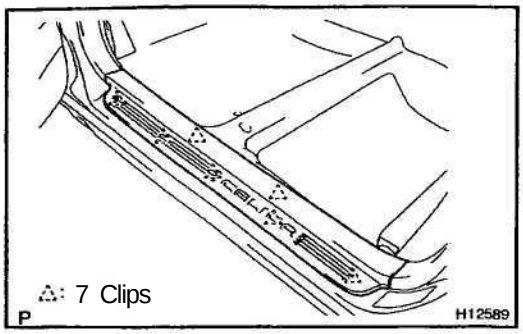

REMOVAL

1. REMOVE DOOR SCUFF PLATE

(a) Using a screwdriver, remove the door scuff plate.

HINT:

Tape the screwdriver tip before use.

(b) Employ the same manner described above to the other side.

2. REMOVE PACKAGE TRAY TRIM

3. REMOVE REAR SEAT (See page BO–102)

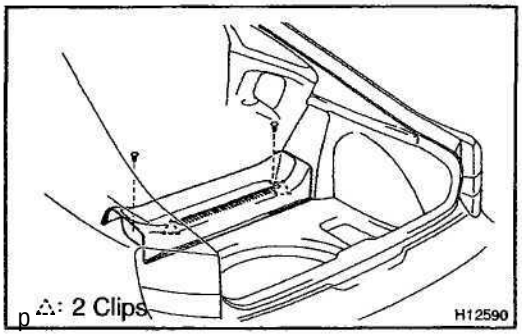

4. REMOVE LUGGAGE COMPARTMENT TRAY

(a) Using a clip remover, remove the 2 clips.

(b) Using a screwdriver, remove the luggage compartment tray.

HINT:

Tape the screwdriver tip before use.

5. REMOVE LUGGAGE COMPARTMENT MAT

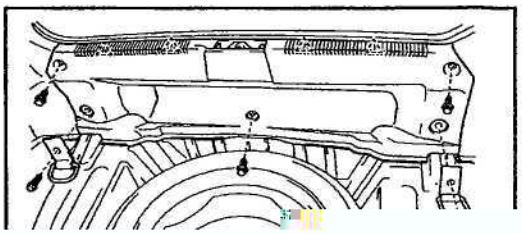

6. REMOVE REAR DECK TRIM COVER

(a) Remove the 2 bolts and 2 hooks.

(b) Remove the 3 clips.

(c) Using a screwdriver, remove the rear deck trim cover.

HINT:

Tape the screwdriver tip before use.

4 Clips
H12591

△: 4 Clips
□: Clip

7. REMOVE DECK TRIM SIDE PANEL

(a) Remove the screw and No. 1 luggage compartment trim hook.

(b) RH side:
Using a screwdriver, remove the rear room light, then disconnect the connector.

HINT:

Tape the screwdriver tip before use.

12592

(c) Remove the 2 clips.

(d) Using a screwdriver, remove the deck trim side panel.

HINT:

Tape the screwdriver tip before use.

(e) Employ the same manner described above to the other side.

8. REMOVE REAR SEATBACK HINGES
Torque: 18 N·m (185 kgf·cm, 13 ft·lbf)

9. REMOVE REAR SEATBACK LOCK STRIKERS
Torque: 18 N·m (185 kgf·cm, 13 ft·lbf)

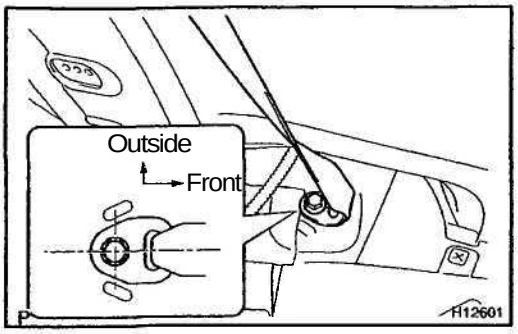

10. REMOVE REAR SEAT OUTER BELT FLOOR ANCHORS

HINT:

At the time of installation, please refer to the following item.

Install the rear seat outer belt floor anchor as shown in the illustration.

Torque: 43 N·m (440 kgf·cm, 32 ft·lbf)

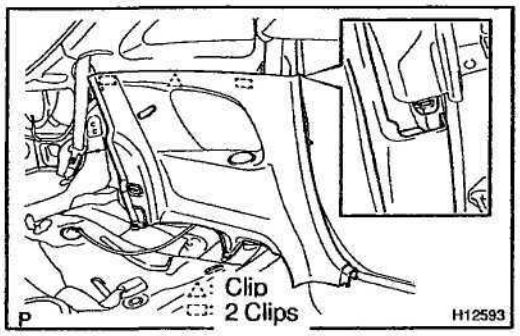

11. REMOVE QUARTER TRIM PANEL

(a) Using a screwdriver, remove the quarter trim panel.

HINT:

Tape the screwdriver tip before use.

(b) Employ the same manner described above to the other side.

12. REMOVE FRONT SEAT OUTER BELT SHOULDER ANCHOR

Torque: 43 N·m (440 kgf cm, 32 ft·lbf)

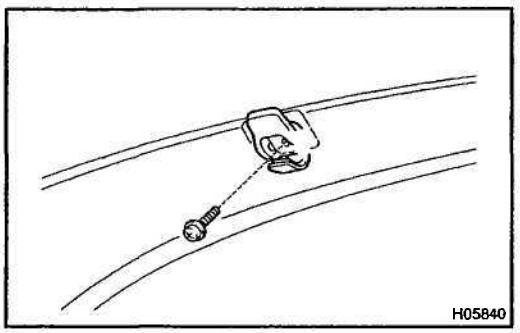

13. REMOVE ROOF SIDE INNER GARNISH

(a) Using a screwdriver, open the cap of coat hook.

HINT:

Tape the screwdriver tip before use.

(b) Remove the screw and coat hook.

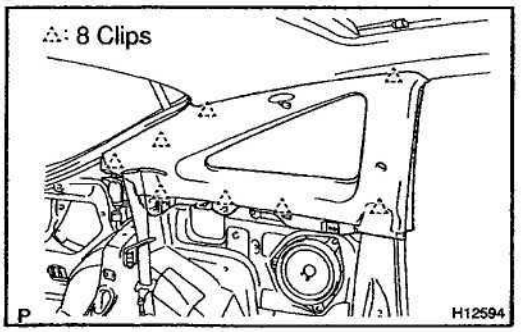

(c) Using a screwdriver, remove the roof side inner quarter.

HINT:

Tape the screwdriver tip before use.

(d) Employ the same manner described above to the other side.

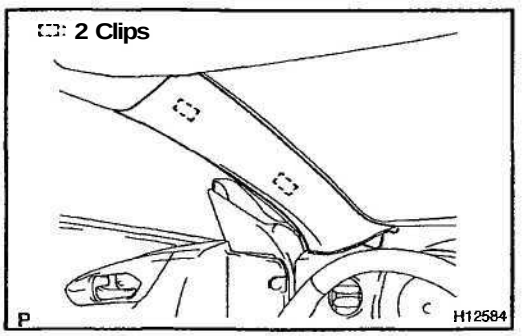

14. REMOVE FRONT PILLAR GARNISH

(a) Using a screwdriver, remove the front pillar garnish.

HINT:

Tape the screwdriver tip before use.

(b) Employ the same manner described above to the other side.

15. REMOVE COWL SIDE TRIMS

16. REMOVE FRONT DOOR OPENING TRIMS

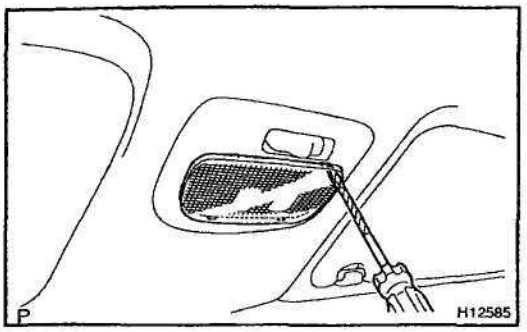

17. w/o Sliding roof:
REMOVE MAP LIGHT ASSEMBLY

(a) Using a screwdriver, remove the lens.

HINT:

Tape the screwdriver tip before use.

(b) Remove the 2 screws and map light assembly, then disconnect the connector.

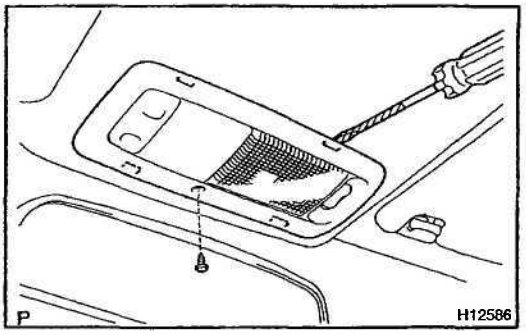

18. w/ Sliding roof:
REMOVE MAP LIGHT ASSEMBLY

(a) Remove the screw.

(b) Using a moulding remover, remove the cover.

(c) Remove the screw and map light assembly, then disconnect the connector.

19. w/ Sliding roof:
REMOVE SUN ROOF OPENING TRIM MOULDING

20. REMOVE SUN VISORS

21. REMOVE SUN VISOR HOLDERS

22. REMOVE ROOF HEADLINING

(a) Using a clip remover, remove the 5 clips.

(b) Remove the roof headlining.

23. REMOVE CLIP STOPPERS

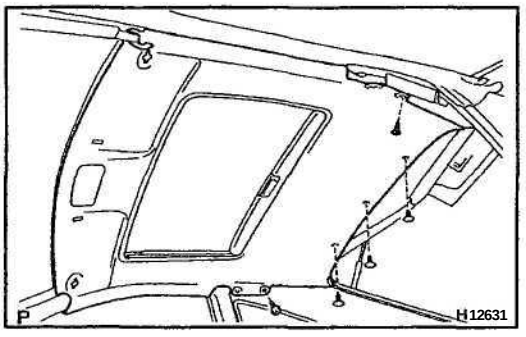

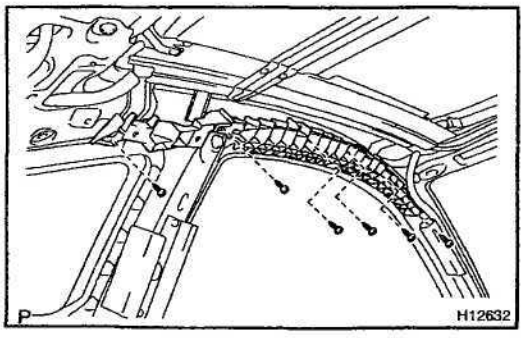

24. REMOVE FRONT ROOF SIDE RAIL PAD

(a) Remove the 6 screws and front roof side rail pad.

(b) Employ the same manner described above to the other side.

INSTALLATION

Installation is in the reverse order of removal (See page BO–88).

FRONT SEAT

COMPONENTS

BO1F6-02

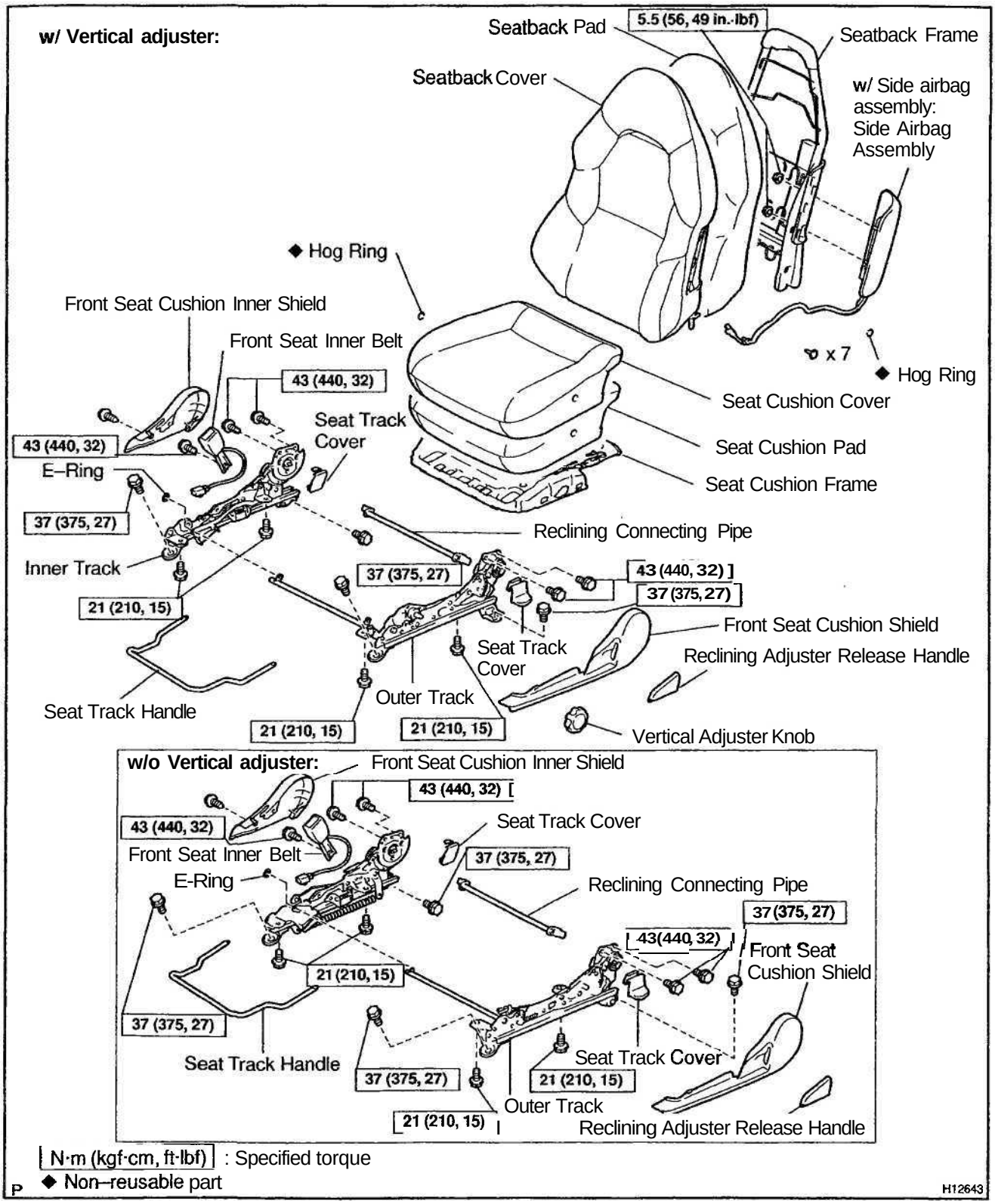

REMOVAL

1. REMOVE SEAT TRACK COVERS

Using a screwdriver, remove the seat track covers.

HINT:

Tape the screwdriver tip before use.

2. REMOVE FRONT SEAT

(a) Remove the 4 bolts.

(b) Disconnect the connectors.

(c) Remove the front seat.

NOTICE:

Be careful not to damage the body.

DISASSEMBLY

1. w/ Vertical adjuster:
REMOVE VERTICAL ADJUSTER KNOB

Using a screwdriver, remove the clip and vertical adjuster knob.
HINT:
Tape the screwdriver tip before use.

2. REMOVE RECLINING ADJUSTER RELEASE HANDLE

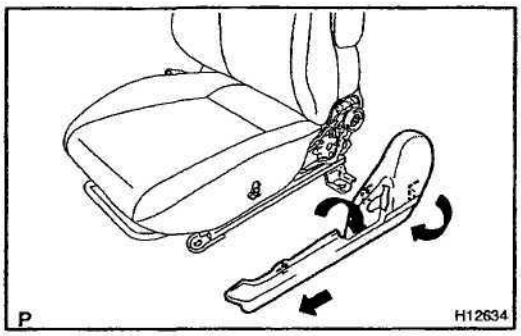

3. REMOVE FRONT SEAT CUSHION SHIELD

Remove the front seat cushion shield as shown in the illustration.

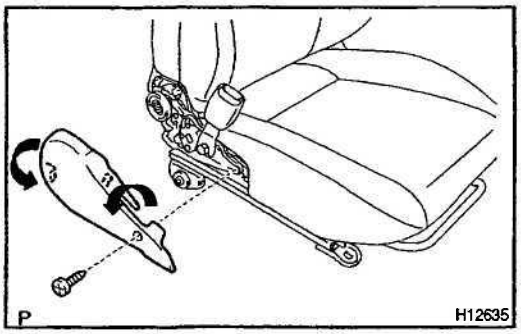

4. REMOVE FRONT SEAT CUSHION INNER SHIELD

Remove the screw and front seat cushion inner shield as shown in the illustration.

5. REMOVE SEATBACK ASSEMBLY

(a) Remove the hog rings.
(b) Zip the seatback cover open.

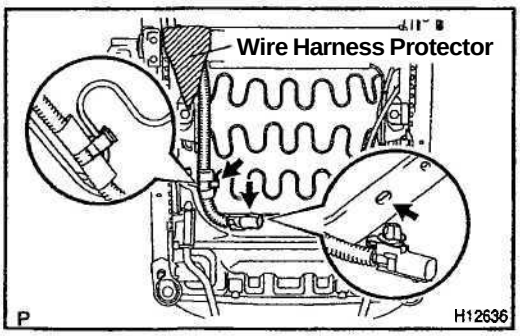

(c) w/ Side airbag assembly:
Turn over the wire harness protector as shown in the illustration.
(d) w/ Side airbag assembly:
Disengage the side airbag wire harness from the seat cushion frame.
(e) w/ Side airbag assembly:
Pull out the side airbag wire harness from the slit of seatback cover.
(f) Remove the 4 bolts and seatback assembly.

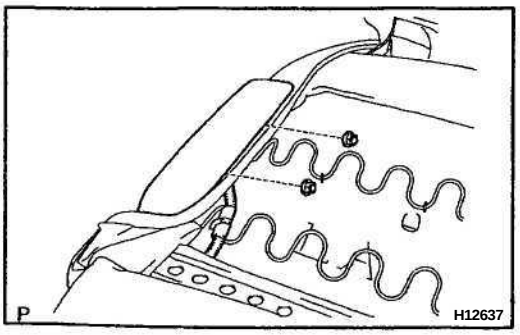

6. REMOVE SEATBACK COVER

(a) w/ Side airbag assembly:
Disengage the clamp of side airbag wire harness, then remove the 2 nuts.

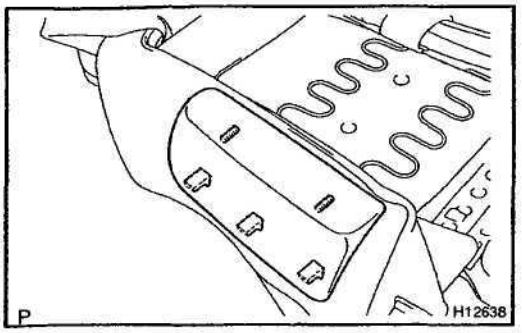

(b) w/ Side airbag assembly:
Remove the side airbag assembly as shown in the illustration.

CAUTION:

- **Do not store the side airbag assembly with the airbag deployment side facing down.**
- **Never disassemble the side airbag assembly.**

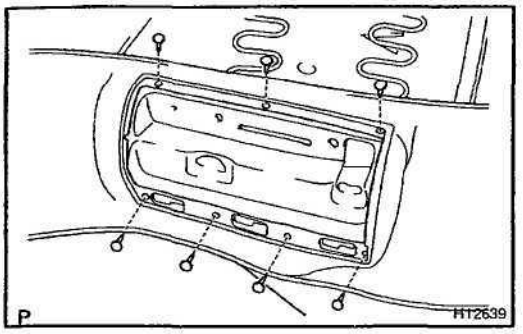

(c) w/ Side airbag assembly:
Using a clip remover, remove the 7 clips.
(d) Remove the seatback frame.
(e) Remove the seatback cover from the seatback cushion.

7. REMOVE FRONT SEAT INNER BELT

8. REMOVE SEAT CUSHION ASSEMBLY

(a) Remove the 4 bolts and seat cushion assembly.
(b) Remove the hog rings.
(c) Disengage the seat cushion cover hooks and remove the seat cushion frame.
(d) Remove the seat cushion cover from the seat cushion pad.

9. REMOVE SEAT TRACK HANDLE

Using a screwdriver, remove the seat track handle.

HINT:

Tape the screwdriver tip before use.

10. REMOVE RECLINING CONNECTING PIPE

11. DISASSEMBLE OUTER AND INNER TRACK

(a) Using a screwdriver, remove the E–ring.
(b) Disassemble the outer track and inner track.

INSPECTION

INSPECT RECLINING LOCK POSITION AND SLIDING LOCK POSITION SLIPPING OFF

(a) When reclining the seat, inspect that the outer and inner recliners are released at the same time.

HINT:

When the reclining lock position slips off, disassemble the seat to adjust the position.

(b) When sliding the seat, inspect that the outer and inner tracks are locked at the same time.

HINT:

When sliding lock positions slip off, loosen the bolts to adjust the position.

REASSEMBLY

1. ASSEMBLE OUTER TRACK AND INNER TRACK

Assemble the outer track and inner track with a new E-ring.

2. INSTALL SEAT TRACK HANDLE

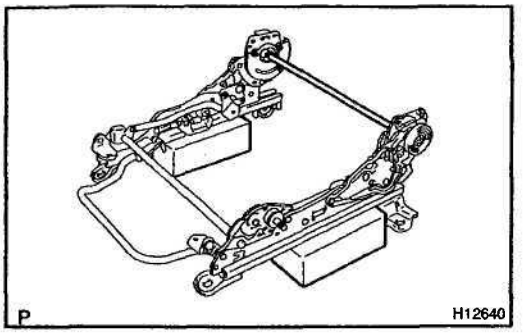

3. INSTALL RECLINING CONNECTING PIPE

(a) Adjust the reclining lock positions of the seat adjusters.

(b) Slide the seat adjusters to the most front position.

(c) Place the adjusters on a spacer to adjust the seat rail in parallel and install the connecting pipe.

HINT:

When installing the connecting pipe while raising up the adjusters, the lock position adjusted in 3–(a) may become detached. When this happens, a lock error will occur.

4. INSTALL SEAT CUSHION ASSEMBLY

(a) Install the seat cushion cover to the seat cushion pad with new hog rings.

HINT:

When installing the hog rings, take care to prevent wrinkles as much as possible.

(b) Install the seat cushion frame to the seat cushion cover with pad.

(c) Engage the seat cushion hooks and install new hog rings.

HINT:

When installing the hog rings, take care to prevent wrinkles as much as possible.

(d) Install the seat cushion assembly with the 4 bolts.

Torque: 21 N·m (210 kgf·cm, 15 ft·lbf)

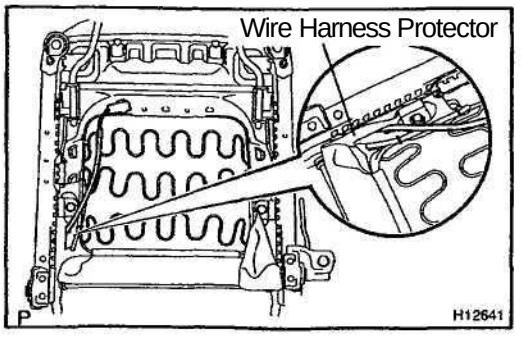

5. INSTALL FRONT SEAT INNER BELT

(a) Pass the wire harness of front seat inner belt through the wire harness protector of seat cushion assembly and install the front seat inner belt.

Torque: 43 N·m (440 kgf·cm, 32 ft·lbf)

(b) Install the front seat inner belt wire harness to the seat cushion frame.

6. INSTALL SEATBACK COVER

(a) Install the seatback cover to the seat cushion pad with new hog rings.

HINT:

When installing the hog rings, take care to prevent wrinkles as much as possible.

(b) Install the seatback frame to the seatback cover with pad.

(c) w/ Side airbag assembly:
Install the 7 clips.

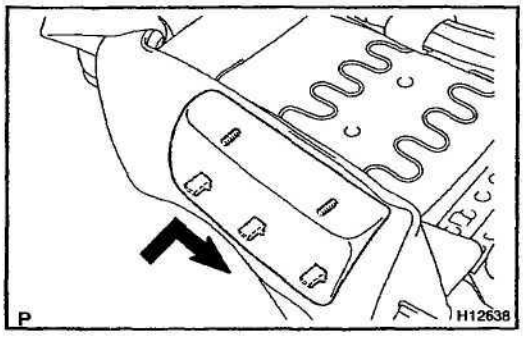

(d) w/ Side airbag assembly:
Install the side airbag assembly as shown in the illustration.

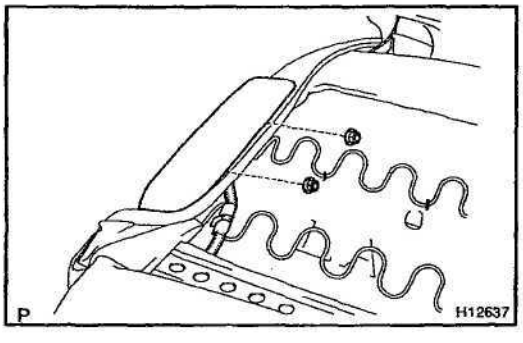

(e) w/ Side airbag assembly:
Install the 2 nuts, then engage the clamp of side airbag wire harness.
Torque:5.5 N·m (56 kgf·cm, 49 in.·lbf)

7. INSTALL SEATBACK ASSEMBLY

(a) Install the seatback assembly with the 4 bolts.
Torque: 43 N·m (440 kgf·cm, 32 ft·lbf)

(b) w/ Side airbag assembly:
Insert the side airbag wire harness into the slit of seatback cover.

(c) w/ Side airbag assembly:
Engage the side airbag wire harness to the seat cushion frame.

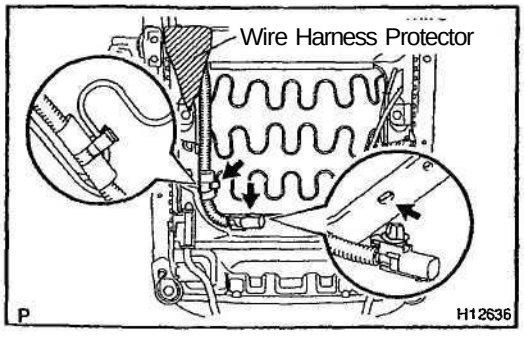

(d) w/ Side airbag assembly:
Replace the wire harness protector as shown in the illustration.

(e) Zip the seatback cover closed.

(f) Install new hog rings.

HINT:

When installing the hog rings, take care to prevent wrinkles as much as possible.

8. INSTALL FRONT SEAT INNER SHIELD
9. INSTALL FRONT SEAT CUSHION SHIELD
10. INSTALL RECLINING ADJUSTER RELEASE HANDLE
11. w/ Vertical adjuster:
    INSTALL VERTICAL ADJUSTER KNOB

INSTALLATION

INSTALL FRONT SEAT

(a) Mount the front seat to the vehicle.

NOTICE:

Be careful not to damage the body.

(b) Connect the connectors.

(c) Slide the front seat to the most front position.

(d) Tighten the bolts on the rear side temporarily, starting from the bolt on the inner side tighten them completely.

Torque: 37 N·m (375 kgf cm, 27 ft·lbf)

(e) Slide the seat to the most rear position to install the bolts on the front side.

Torque: 37 N·m (375 kgf·cm, 27 ft-lbf)

(f) Install the seat track covers.

REAR SEAT

COMPONENTS

B01FC-02

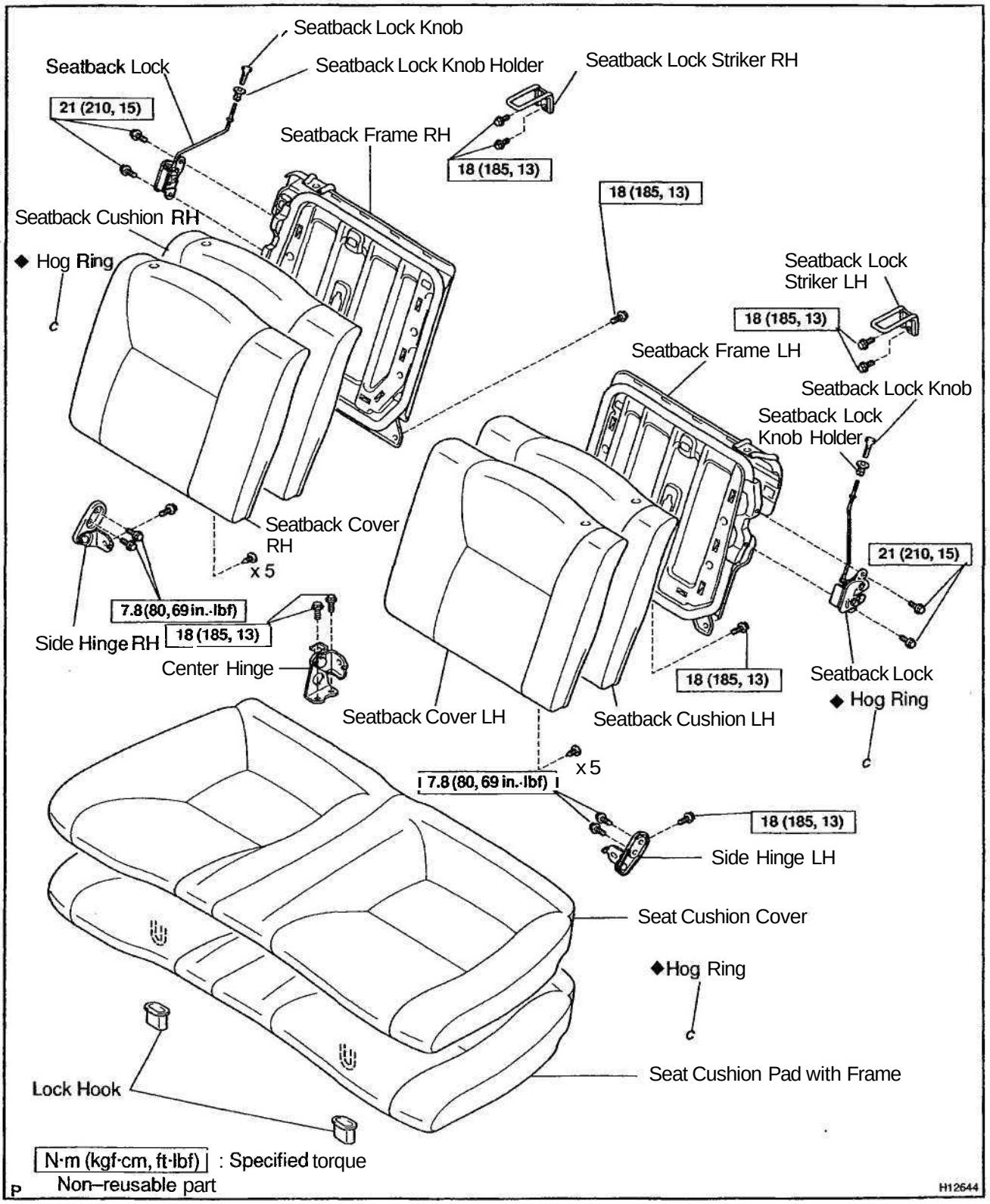

REMOVAL

1. REMOVE SEATBACK ASSEMBLY LH AND RH

(a) Release the seatback assembly LH and RH.

(b) Remove the 4 bolts.

Torque: 18 N·m (185 kgf·cm, 13 tt-lbf)

(c) Remove the seatback assembly LH and RH.

2. REMOVE SEAT CUSHION ASSEMBLY

3. REMOVE SIDE HINGE LH AND RH

Torque: 7.8 N·m (80 kgf·cm, 69 ft·lbf)

4. REMOVE CENTER HINGE

Torque: 18 N·m (185 kgf·cm, 13 ft·lbf)

5. REMOVE SEATBACK LOCK STRIKER (See page BO–88)

Torque: 18 N·m (185 kgf·cm, 13 ft-lbf)

DISASSEMBLY

1. REMOVE SEATBACK LOCK KNOBS

2. REMOVE SEATBACK LOCK KNOB HOLDERS

3. REMOVE SEATBACK FRAME

(a) Using a clip remover, remove the 5 clips.

(b) Turn over the seatback cover, then remove the hog rings.

(c) Remove the seatback frame from the seatback cover with pad.

(d) Employ the same manner described above to the other side.

4. REMOVE SEATBACK LOCK

(a) Remove the 2 bolts and seatback lock.

(b) Employ the same manner described above to the other side.

5. REMOVE SEATBACK COVER

(a) Remove the hog rings and seatback cover from the seatback pad.

(b) Employ the same manner described above to the other side.

6. REMOVE SEATBACK CUSHION COVER

Remove the hog rings and seat cushion cover from the seat cushion frame with pad.

REASSEMBLY

1. INSTALL SEAT CUSHION COVER

Install the seat cushion cover with new hog ring to the seat cushion frame with pad.

HINT:

When installing hog rings, take care to prevent wrinkles as little as possible.

2. INSTALL SEATBACK COVER

(a) Install the seatback cover with new hog ring to the seatback pad.

HINT:

When installing hog rings, take care to prevent wrinkles as little as possible.

(b) Employ the same manner described above to the other side.

3. INSTALL SEATBACK LOCKS

Torque: 21 N·m (210 kgf·cm, 15 ft·lbf)

4. INSTALL SEATBACK FRAME

(a) Install the seatback frame to the seatback cover with pad.

(b) Install new hog rings.

HINT:

When installing hog rings, take care to prevent wrinkles as little as possible.

(c) Install the 5 clips.

(d) Employ the same manner described above to the other side.

5. INSTALL SEATBACK LOCK KNOB HOLDERS

6. INSTALL SEATBACK LOCK KNOB

INSTALLATION

Installation is in the reverse order of removal (See page BO–102).

SEAT BELT

COMPONENTS

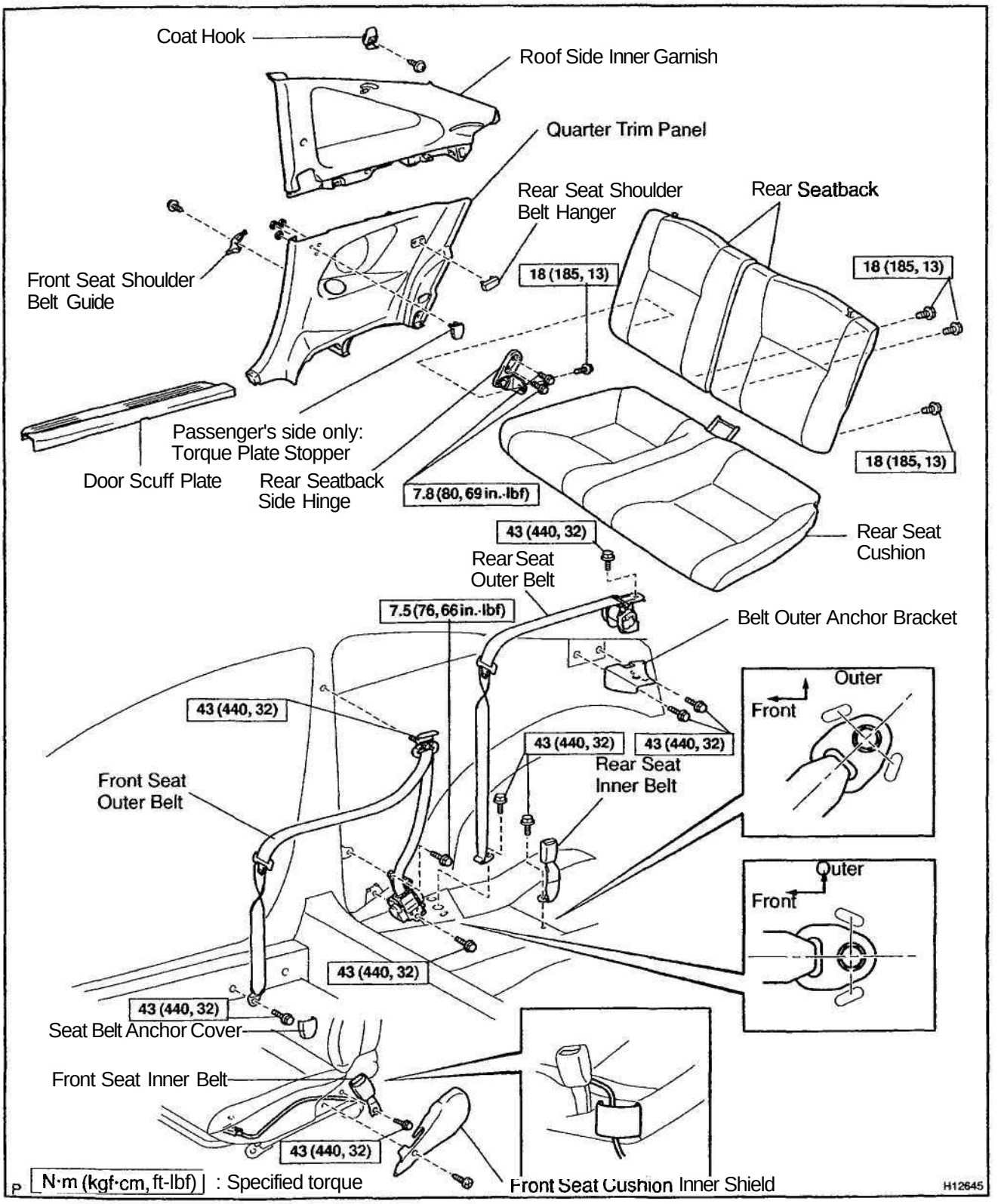

801FI-02

INSPECTION

CAUTION:
Replace the seat belt assembly (outer belt, inner belt, bolts, nuts or sill-bar) if it has been used in a severe impact. The entire assembly should be replaced even if damage is not obvious.

1. RUNNING TEST (IN SAFE AREA)

(a) Fasten the front seat belts.

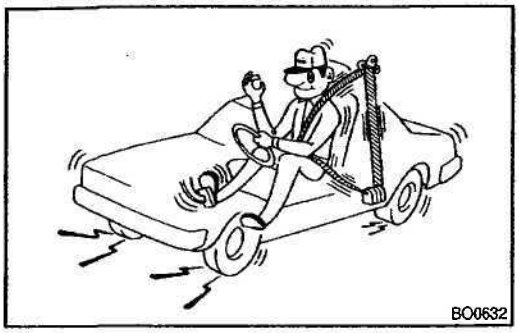

(b) Drive the car at 10 mph (16 km/h) and slam on the brakes. Check that the belt locks and cannot be extended at this time.

HINT:
Conduct this test in a safe area. If the belt does not lock, remove the belt mechanism assembly and conduct the following static check. Also, whenever installing a new belt assembly, verify the proper operation before installation.

2. **Driver's Seat Belt** (ELR):

STATIC TEST

(a) Make sure that the belt locks when pulled out quickly.
(b) Remove the locking retractor assembly.
(c) Tilt the retractor slowly.

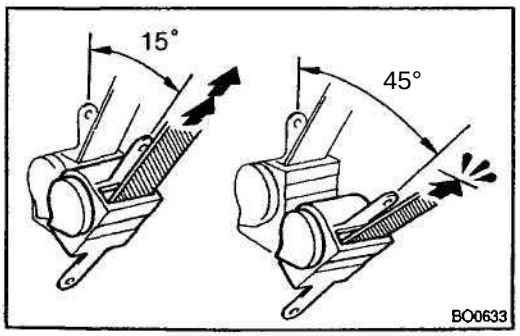

(d) Make sure that the belt can be pulled out at a tilt of 15 degrees or less, and cannot be pulled out over 45 degrees of tilt.

If a problem is found, replace the assembly.

3. Except Driver's Seat Belt (ELR/ALR):

STATIC TEST

(a) Make sure that the belt locks when pulled out quickly.
(b) Remove the locking retractor assembly.
(c) Pull out the whole belt and measure the length of the whole belt.
Then retract the belt slightly and pull it out again.
(d) Make sure that the belt cannot be extended further.

If a problem is found, replace the assembly.

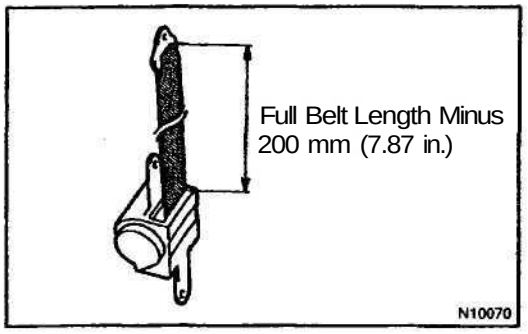

(e) Retract the whole belt, then pull out the belt until 200 mm (7.87 in.)of belt remains retracted.

(f) Tilt the retractor slowly.

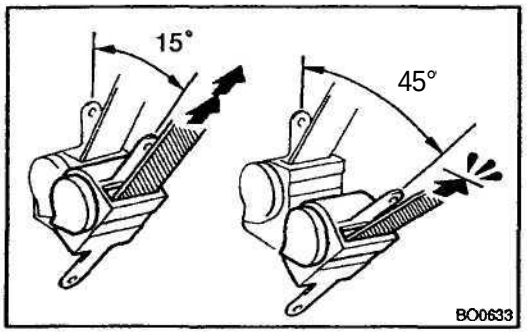

(g) Make sure that the belt can be pulled out at a tilt of 15 degrees or less, and cannot be pulled out at over 45 degrees of tilt.

If a problem is found, replace the assembly.

SEAT BELT PRETENSIONER

BO20E-01

REMOVAL

NOTICE:

- **If the wiring connector of the seat belt pretensioner is disconnected with the ignition switch at ON diagnostic trouble codes will be recorded.**
- **Never use seat belt pretensioner from another vehicle. When replacing parts, replace them with new parts.**

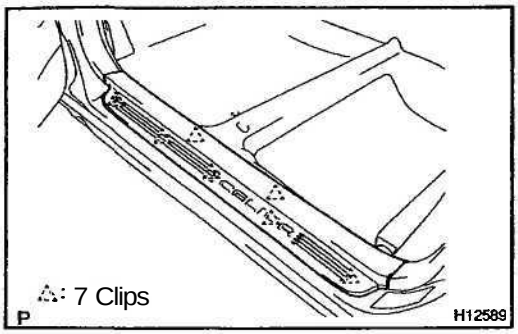

1. REMOVE DOOR SCUFF PLATE

Using a screwdriver, remove the door scuff plate.

HINT:

Tape the screwdriver tip before use.

2. REMOVE PACKAGE TRAY TRIM

3. REMOVE REAR SEAT (See page BO–102)

4. REMOVE LUGGAGE COMPARTMENT TRAY

(a) Using a clip remover, remove the 2 clips.

(b) Using a screwdriver, remove the luggage compartment tray.

HINT:

Tape the screwdriver tip before use.

5. REMOVE LUGGAGE COMPARTMENT MAT

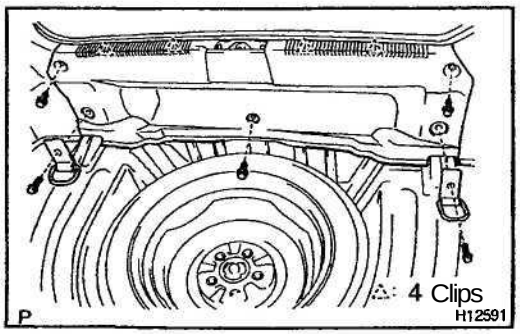

6. REMOVE REAR DECK TRIM COVER

(a) Remove the 2 bolts and 2 hooks.

(b) Remove the 3 clips.

(c) Using a screwdriver, remove the rear deck trim cover.

HINT:

Tape the screwdriver tip before use.

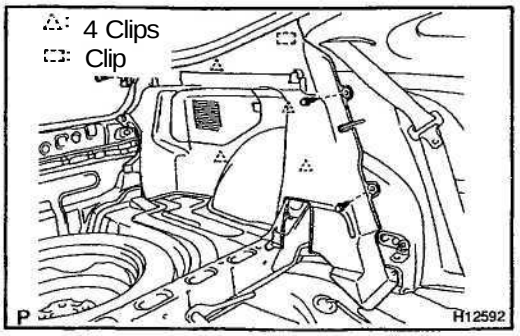

7. REMOVE DECK TRIM SIDE PANEL

(a) Remove the screw and No. 1 luggage compartment trim hook.

(b) RH side:

Using a screwdriver, remove the rear room light, then disconnect the connector.

HINT:

Tape the screwdriver tip before use.

(c) Remove the 2 clips.
(d) Using a screwdriver, remove the deck trim side panel.

HINT:
Tape the screwdriver tip before use.

8. REMOVE REAR SEATBACK HINGE

9. REMOVE REAR SEATBACK LOCK STRIKER

10. REMOVE REAR SEAT OUTER BELT FLOOR ANCHORS

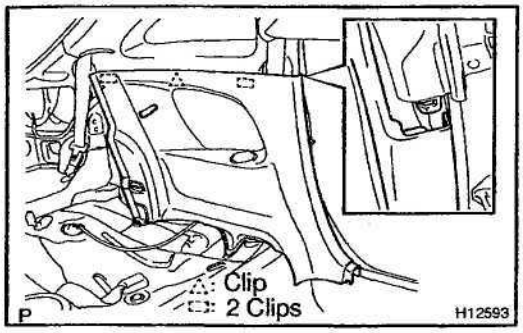

11. REMOVE QUARTER TRIM PANEL

Using a screwdriver, remove the quarter trim panel.

HINT:
Tape the screwdriver tip before use.

12. REMOVE FRONT SEAT OUTER BELT SHOULDER ANCHOR

13. REMOVE FRONT SEAT OUTER BELT FLOOR ANCHOR

14. REMOVE RETRACTOR OF FRONT SEAT OUTER BELT

CAUTION:
Never disassemble the front seat outer belt.

NOTICE:
When removing the retractor of front seat outer belt, take care not to pull the seat belt pretensioner wire harness.

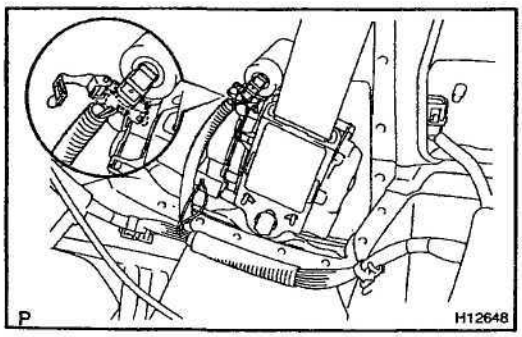

(a) Disconnect the pretensioner connector as shown in the illustration.

CAUTION:
When removing the seat belt pretensioner, work must be started 90 seconds after the ignition switch is turned to the "LOCK" position and the negative (-) terminal cable is disconnected from the battery.

(b) Disconnect the connector.
(c) Remove the 2 bolts and retractor of front seat outer belt.

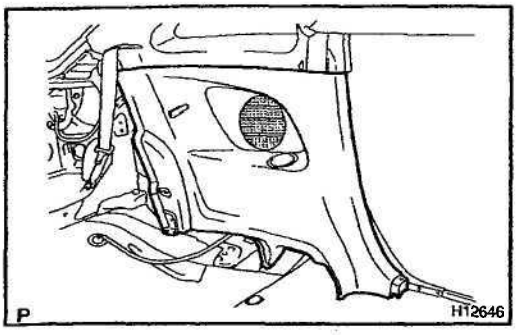

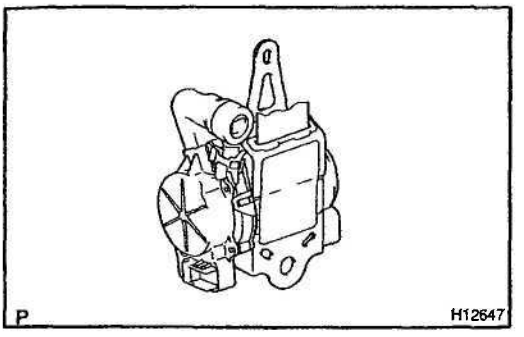

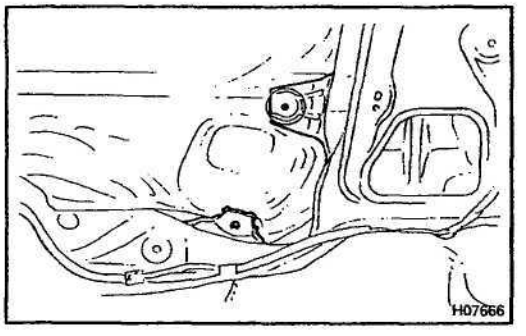

INSPECTION

1. PRETENSIONER IS NOT ACTIVATED

(a) Perform a diagnostic system check (See page DI–326).

(b) Perform a visual check which includes the following items with the front seat outer belt removed from the vehicle.
- Check for cuts and cracks in, or marked discoloration on the quarter trim panel.
- Check for cuts and cracks in wire harness, and for chipping in connectors.
- Check for deformation of the quarter panel.

CAUTION:

For removal and installation of the front seat outer belt, see page BO–109 and BO–118.

2. PRETENSIONER IS ACTIVATED

(a) Perform a diagnostic system check (See page DI–326).

(b) Perform a visual check which includes the following items with the front seat outer belt removed from the vehicle.
- Check for deformation of the quarter panel.
- Check for damage on the connector and wire harness.

B0206-01

DISPOSAL

HINT:

When scrapping vehicles equipped with a seat belt pretensioner or disposing of a front seat outer belt (with seat belt pretensioner) always first activate the seat belt pretensioner in accordance with the procedure described below. If any abnormality occurs in the seat belt pretensioner operation, contact the SERVICE DEPT. of TOYOTA MOTOR SALES, U.S.A., INC. When disposing of a front seat outer belt (with seat belt pretensioner) activated in a collision, follow the same procedure given in step 1–(e) in "DISPOSAL".

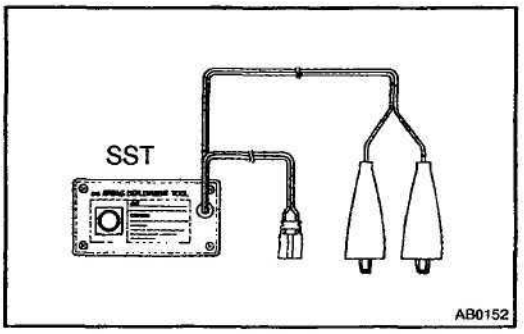

CAUTION:

- **Never dispose of front seat outer belt which has an inactivated pretensioner.**
- **The seat belt pretensioner produces a sizeable exploding sound when it activates, so perform the operation out–of–door and where it will not create a nuisance to nearby residents.**
- **When activating the seat belt pretensioner, always use the specified SST. (SRS Airbag Deployment Tool) Perform the operation in a place away from electrical noise.**

  SST 09082–00700, 09082–00740
- **When activating a front seat outer belt (with seat belt pretensioner), perform the operation at least 10 m (33 ft) away from the front seat outer belt.**
- **Use gloves and safety glasses when handling a front seat outer belt with activated pretensioner.**
- **Always wash your hands with water after completing the operation.**
- **Do not apply water, etc. to a front seat outer belt with activated pretensioner.**

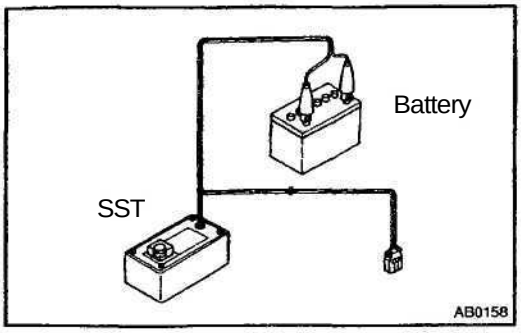

1. SEAT BELT PRETENSIONER ACTIVATION WHEN SCRAPPING VEHICLE

HINT:
Have a battery ready as the power source to activate the seat belt pretensioner.

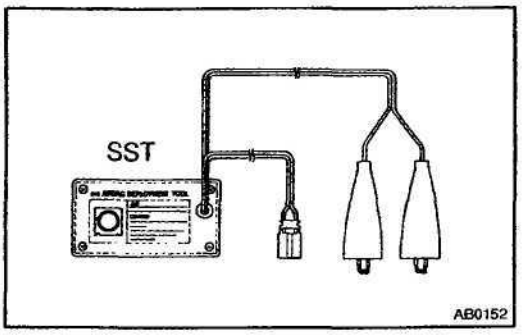

(a) Check functioning of SST.

CAUTION:
When activating the seat belt pretensioner, always use the specified SST: SRS Airbag Deployment Tool.

SST 09082–00700, 09082–00740

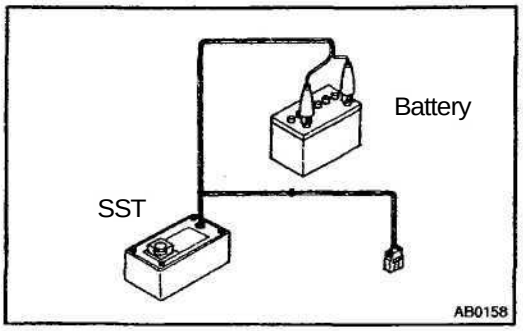

(1) Connect the SST to the battery.
Connect the red clip of the SST to the battery positive (+) terminal and the black clip to the battery negative (-) terminal.

HINT:
Do not connect the yellow connector which will be connected with the seat belt pretensioner.

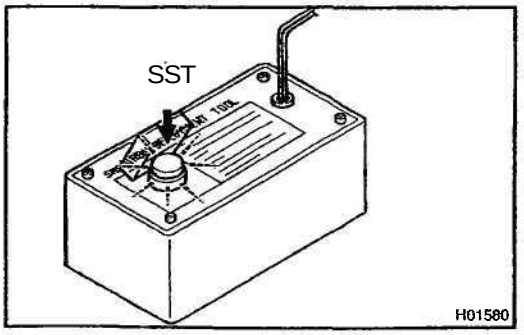

(2) Check functioning of SST.
Press the SST activation switch, and check the LED of the SST activation switch lights up.

CAUTION:
If the LED lights up when the activation switch is not being pressed, SST malfunction is probable, so definitely do not use the SST.

(b) Disconnect the pretensioner connector.
(1) Remove the door scuff plate.
(2) Remove the package tray trim.
(3) Remove the rear seat (See page BO–102).
(4) Remove the luggage compartment trim.
(5) Remove the luggage compartment mat.
(6) Remove the rear deck trim cover.
(7) Remove the deck trim side panel.
(8) Remove the seatback hinge.
(9) Remove the seatback lock striker.
(10) Remove the rear seat outer belt floor anchor.
(11) Remove the quarter trim panel.

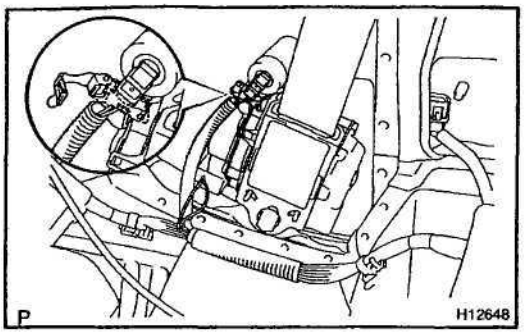

(12) Disconnect the pretensioner connector as shown in the illustration.

(c) Install the SST.

(1) Buckle the front seat belt and check that there is no looseness and slack in the front seat inner belt and front seat outer belt.

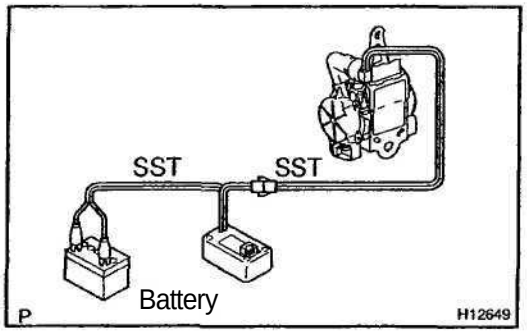

(2) Connect the 2 SST, then connect them to the seat belt pretensioner.

SST 09082–00700, 09082–00740

NOTICE:

To avoid damaging the SST connector and wire harness, do not lock the secondary lock of the twin lock.

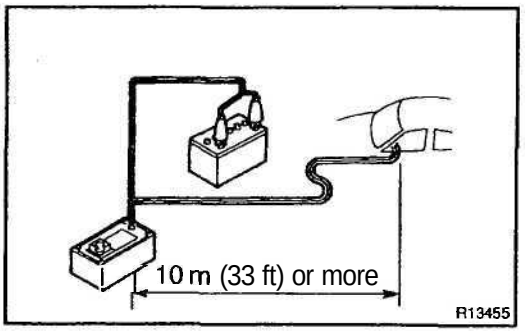

(3) Move the SST to at least 10 m (33 ft) away from the front of the vehicle.

(4) Close all the doors and windows of the vehicle.

NOTICE:

Take care not to damage the SST wire harness.

(5) Connect the SST red clip to the battery positive (+) terminal and the black clip to the negative (-) terminal.

(d) Activate the seat belt pretensioner.

(1) Confirm that no one is inside the vehicle or within 10 m (33 ft) area around of the vehicle.

(2) Press the SST activation switch and activate the seat belt pretensioner.

HINT:

The seat belt pretensioner operates simultaneously as the LED of the SST activation switch lights up.

(e) Dispose of front seat outer belt (with seat belt pretensioner).

CAUTION:

- **The front seat outer belt is very hot when the seat belt pretensioner is activated, so leave it alone for at least 30 minutes after activation.**
- **Use gloves and safety glasses when handling a front seat outer belt with activated seat belt pretensioner.**
- **Always wash your hands with water after completing the operation.**
- **Do not apply water, etc. to a front seat outer belt with activated seat belt pretensioner.**

HINT:
When scrapping a vehicle, activate the seat belt pretensioner and scrap the vehicle with activated front seat outer belt still installed.

2. ACTIVATION WHEN DISPOSING OF FRONT SEAT OUTER BELT ONLY

NOTICE:

- **When disposing of the front seat outer belt (with seat belt pretensioner) only, never use the customer's vehicle to activate the seat belt pretensioner.**
- **Be sure to follow the procedure given on the next page when activating the seat belt pretensioner.**

HINT:
Have a battery ready as the power source when activating the seat belt pretensioner.

(a) Remove the front seat outer belt (See page BO–109).

HINT:
Cut the belt near the seat belt retractor.

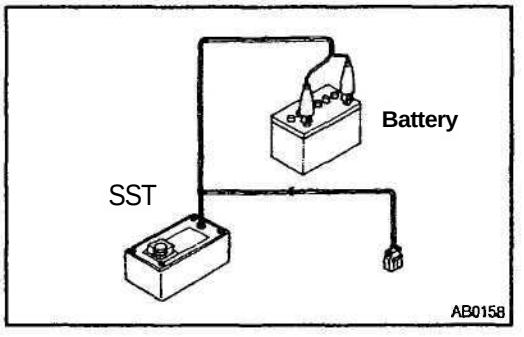

(b) Check functioning of SST (See step 1–(a)).
SST 09082–00700, 09082–00740

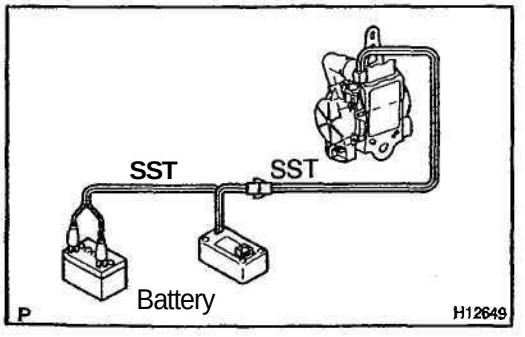

(c) Install the SST.
(1) Connect the 2 SST, then connect them to the seat belt pretensioner.
SST 09082–00700, 09082–00740

NOTICE:
To avoid damaging the SST connector and wire harness, do not lock the secondary lock of the twin lock.

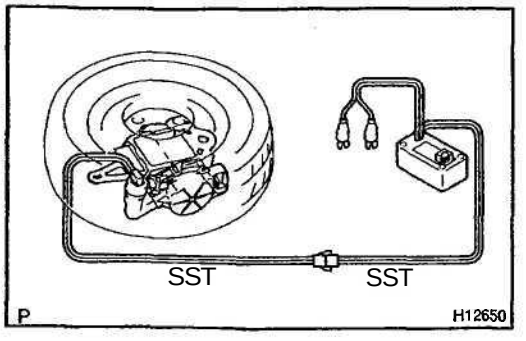

(2) Place the front seat outer belt on the ground and cover it with the disc wheel with tire.

NOTICE:
Place the front seat outer belt as shown in the illustration.

(3) Move the SST as least 10 m (33 ft) away from the disc wheel.

NOTICE:
Take care not to damage the SST wire harness.

(d) Activate the seat belt pretensioner.
(1) Connect the SST red clip to the battery positive (+) terminal and black clip to the battery negative (-) terminal.
(2) Check that no one is within 10 m (33 ft) area around the disc wheel.
(3) Press the SST activation switch and activate the seat belt pretensioner.

HINT:
The seat belt pretensioner operates simultaneously as the LED of the SST activation switch lights up.

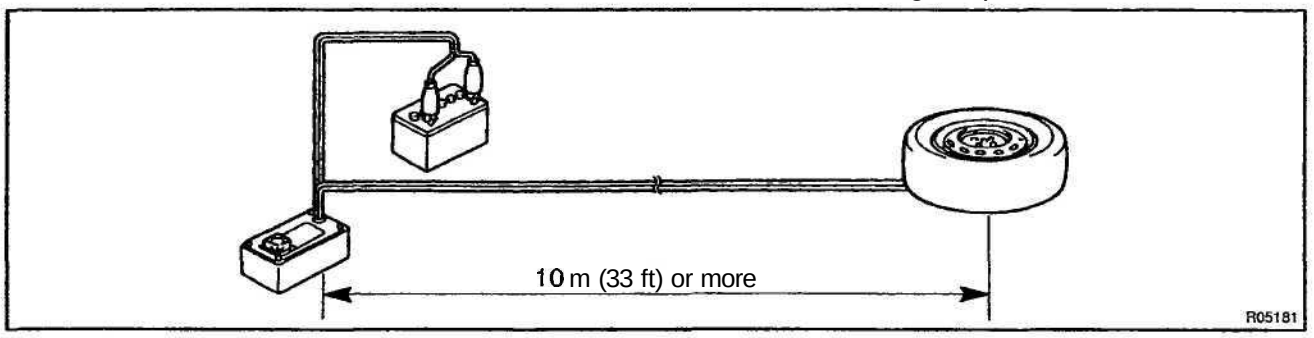

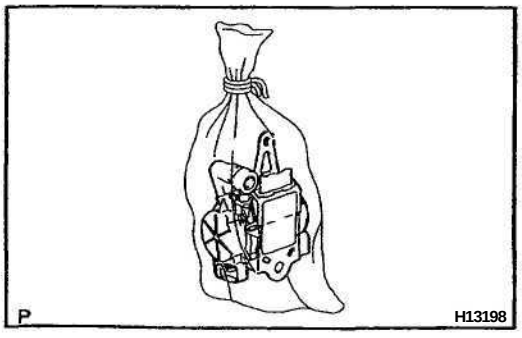

(e) Dispose of front seat outer belt (with seat belt pretensioner).

CAUTION:
- **The front seat outer belt is very hot when the seat belt pretensioner is activated, so leave it alone for at least 30 minutes after activation.**
- **Use gloves and safety glasses when handling a front seat outer belt with activated seat belt pretensioner.**
- **Always wash your hands with water after completing the operation.**
- **Do not apply water, etc. to a front seat outer belt with activated seat belt pretensioner.**

(1) Remove the disc wheel and SST.
(2) Place the front seat outer belt in a vinyl bag, tie the end tightly and dispose of it in the same way as other general parts.

REPLACEMENT

REPLACE REQUIREMENTS

In the following cases, replace the seat belt pretensioner.

- If the seat belt pretensioner has been activated.
- If the seat belt pretensioner has been found to be faulty in troubleshooting.
- If the front seat outer belt has been found to be faulty during checking in items 1-(b) or 2-(b).
- If the front seat outer belt has been dropped.

CAUTION:

For removal and installation of the seat belt pretensioner, see page BO–109 and BO–118.
Be sure to follow the correct procedure.

BO20I-01

INSTALLATION

NOTICE:

- Never use seat belt pretensioner from another vehicle. When replacing parts, replace them with new parts.
- Make sure that the front seat outer belt is installed with the specified torque.
- If the **front** seat outer belt has been dropped, or there are cracks, dents or other defects in the case or connector, replace the front seat outer belt with a new one.
- When installing the front seat outer belt, take care that the wiring does not interfere with other parts and is not pinched between other parts.

1. INSTALL RETRACTOR OF FRONT SEAT OUTER BELT

(a) Install the retractor of front seat outer belt with the 2 bolts.
Torque:
Upper bolt: 7.5 N·m (76 kgf·cm, 66 in.·lbf)
Lower bolt: 43 N·m (440 kgf·cm, 32 ft·lbf)

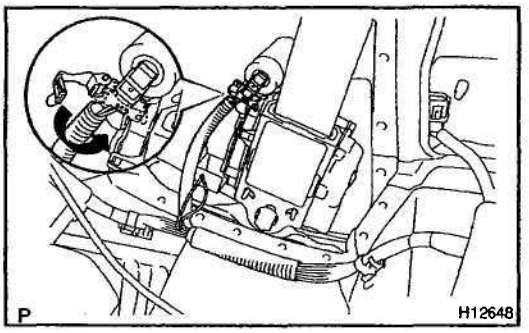

(b) Connect the pretensioner connector as shown in the illustration.

(c) Connect the retractor switch connector.

2. INSTALL FRONT SEAT OUTER BELT SHOULDER ANCHOR
Torque: 43 **N·m** (440 **kgf·cm,** 32 **ft·lbf)**

3. INSTALL FRONT SEAT OUTER BELT FLOOR ANCHOR
Torque: 43 **N·m** (440 **kgf·cm,** 32 **ft·lbf)**

4. INSTALL QUARTER TRIM PANEL

5. INSTALL REAR SEAT OUTER BELT FLOOR ANCHOR
Torque: 43 N m (440 kgf·cm, 32 ft·lbf)

6. INSTALL REAR SEATBACK LOCK STRIKER

7. INSTALL REAR SEATBACK HINGE

8. INSTALL DECK TRIM SIDE PANEL

9. INSTALL REAR DECK TRIM COVER

10. INSTALL LUGGAGE COMPARTMENT MAT

11. INSTALL LUGGAGE COMPARTMENT TRAY

12. INSTALL REAR SEAT (See page BO–105)

13. INSTALL PACKAGE TRAY TRIM

14. INSTALL DOOR SCUFF PLATE

AIR CONDITIONING

AIR CONDITIONING SYSTEM. AC–1
TROUBLESHOOTING. AC–14
DRIVE BELT. AC–16
MANIFOLD GAUGE SET. AC–19
REFRIGERANT LINE. AC–21
AIR CONDITIONING UNIT. AC–24
BLOWER UNIT. AC–30
COMPRESSOR AND
MAGNETIC CLUTCH. AC–35
CONDENSER. AC–43
BLOWER MOTOR. AC–48
BLOWER RESISTOR. AC–49
THERMISTOR. AC-50
PRESSURE SWITCH. AC–51
HEATER MAIN RELAY. AC–54
MAGNETIC CLUTCH RELAY. AC–55
COOLING FAN RELAY. AC–56
CONDENSER FAN. AC–57
AIR CONDITIONING AMPLIFIER. AC–60
HEATER CONTROL ASSEMBLY. AC–65
ENGINE COOLANT
TEMPERATURE (ECT) SWITCH. AC–72
AIR REFINER FILTER. AC–73

AC

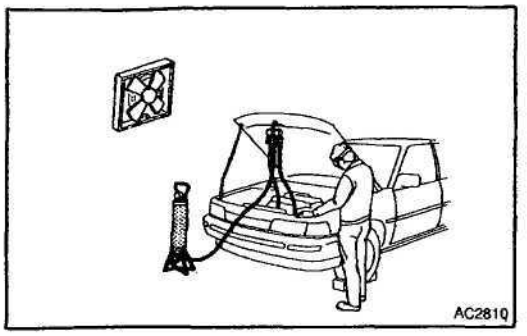

AIR CONDITIONING SYSTEM

PRECAUTION

AC0C1-05

1. DO NOT HANDLE REFRIGERANT IN AN ENCLOSED AREA OR WEAR EYE PROTECTION

2. ALWAYS WEAR EYE PROTECTION

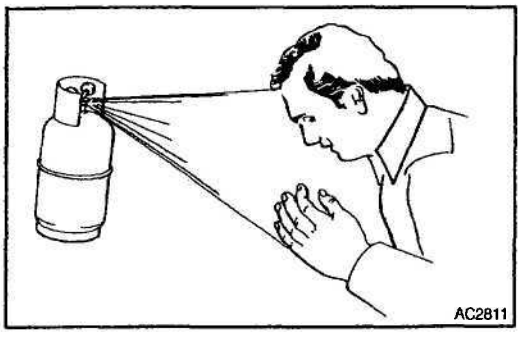

3. BE CAREFUL NOT TO GET LIQUID REFRIGERANT IN YOUR EYES OR ON YOUR SKIN

If liquid refrigerant gets in your eyes or on your skin.

(a) Wash the area with lots of cool water.

CAUTION:

Do not rub your eyes or skin.

(b) Apply clean petroleum jelly to the skin.

(c) Go immediately to a physician or hospital for professional treatment.

4. NEVER HEAT CONTAINER OR EXPOSE IT TO NAKED FLAME

5. BE CAREFUL NOT TO DROP CONTAINER AND NOT TO APPLY PHYSICAL SHOCKS TO IT

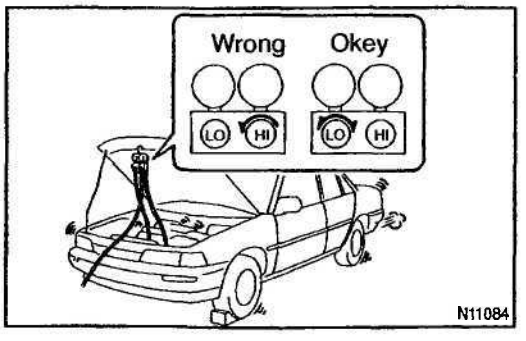

6. DO NOT OPERATE COMPRESSOR WITHOUT ENOUGH REFRIGERANT IN REFRIGERATION SYSTEM

If there is not enough refrigerant in the refrigerant system oil lubrication will be insufficient and compressor burnout may occur, so that care to avoid this, necessary care should be taken.

7. DO NOT OPEN PRESSURE MANIFOLD VALVE WHILE COMPRESSOR IS OPERATE

If the high pressure valve is opened, refrigerant flows in the reverse direction and could cause the charging cylinder to rupture, so open and close the only low pressure valve.

8. BE CAREFUL NOT TO OVERCHARGE SYSTEM WITH REFRIGERANT

If refrigerant is overcharged, it causes problems such as insufficient cooling, poor fuel economy, engine overheating etc.

9. SUPPLEMENTAL RESTRAINT SYSTEM (SRS)

The CELICA is equipped with an SRS (Supplemental Restraint System) such as the driver and front passenger airbag. Failure to carry out service operation in the correct sequence could cause the SRS to unexpectedly deploy during servicing, possibly leading to a serious accident. Before servicing (including removal or installation of parts, inspection or replacement), be sure to read the precautionary notices tn the RS section.

AC2GT-01

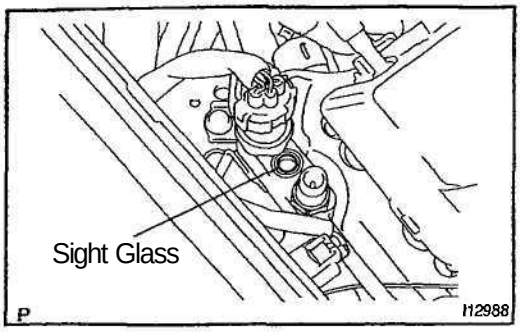

ON–VEHICLE INSPECTION

1. INSPECT REFRIGERANT VOLUME

Observe the sight glass on the liquid tube.

Test conditions:

- Running engine at 1,500 rpm
- Blower speed control switch at "HI" position
- A/C switch ON
- Temperature control dial at "COOL" position
- Fully open the doors

Item	Symptom	Amount of refrigerant	Remedy
1	Bubbles present in sight glass	Insufficient*	(1) Check for gas leakage with gas leak detector and repair if necessary (2) Add refrigerant until bubbles disappear
2	No bubbles present in sight glass	None, sufficient or too much	Refer item 3 and 4
3	No temperature difference between compressor inlet and outlet	Empty or nearly empty	(1) Check for gas leakage with gas leak detector and repair if necessary (2) Add refrigerant until bubbles disappear
4	Temperature between compressor inlet and outlet is noticeably different	Correct or too much	Refer to items 5 and 6
5	Immediately after air conditioning is turned off, refrigerant in sight glass stays clear	Too much	(1) Discharge refrigerant (2) Evacuate air and charge proper amount or purified refrigerant
6	When air conditioning is turned off, refrigerant foams and then stays clear	Correct	–

*: Bubbles in the sight glass with ambient temperatures higher than usual can be considered normal if cooling is sufficient.

2. INSPECT REFRIGERANT PRESSURE WITH MANIFOLD GAUGE SET

This is a method in witch the trouble is located by using a manifold gauge set. Read the manifold gauge pressure when the these conditions are established.

Test conditions:

- Temperature at the air inlet with the switch set at RECURC is 30 - 35 °C (86 – 95 °F)
- Engine running at 1500 rpm
- Blower speed control switch at "HI" position
- Temperature control dial at "COOL" position

HINT:

It should be noted that the gauge indications may vary slightly due to ambient temperature conditions.

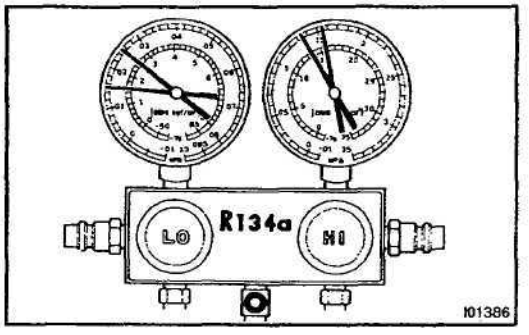

(1) Normally functioning refrigeration system.

Gauge reading:

Low pressure side:

0.15 - 0.25 MPa (1.5 - 2.5 kgf/cm^2)

High pressure side:

1.37 – 1.57 MPa (14 – 16 kgf/cm^2)

(2) Moisture present in refrigeration system.

Condition : Periodically cools and then fails to cool

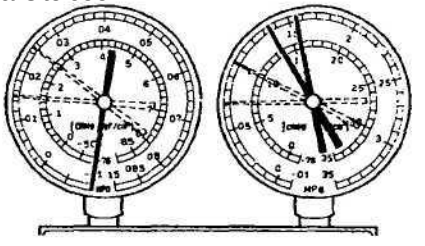

Symptom seen in refrigeration system	Probable cause	Diagnosis	Remedy
During operation, pressure on low pressure side sometimes become a vacuum and sometime normal	Moisture entered in refrigeration system freezes at expansion valve orifice and temporarily stops cycle, but normal state is restored after a time when the ice melts	• Drier in oversaturected state • Moisture in refrigeration system freezes at expansion valve orifice and blocks circulation of refrigerant	(1) Replace condenser (2) Remove moisture in cycle through repeatedly evacuating air (3) Charge proper amount of new refrigerant

(3) Insufficient cooling

Condition: Insufficient cooling

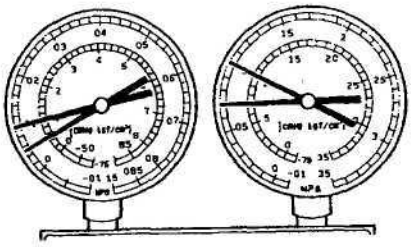

I01388

Symptom seen in refrigeration system	Probable cause	Diagnosis	Remedy
• Pressure low on both tow and high pressure sides • Bubbles seen in sight glass continuously • Insufficient cooling performance	Gas leakage at some place in refrigeration system	• Insufficient refrigerant in system • Refrigerant leaking	(1) Check for gas leakage with gas leak detector and repair if necessary (2) Charge proper amount of refrigerant (3) If indicated pressure value is near 0 when connected to gauge, create the vacuum after inspecting and repairing the location of the leak

(4) Poor circulation of refrigerant

Condition: Insufficient cooling

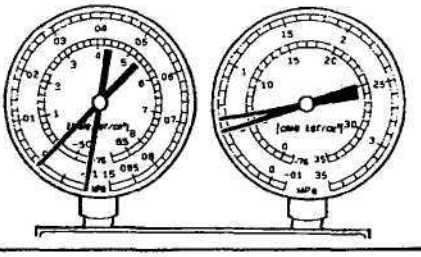

I01389

Symptom seen in refrigeration system	Probable cause	Diagnosis	Remedy
• Pressure tow in both low and high pressure sides • Frost on tube from condenser to unit	Refrigerant flow obstructed by dirt in receiver	Receiver clogged	Replace condenser

AC

(5) Refrigerant does not circulate

Condition: Does not cool (Cools from time to time in some cases)

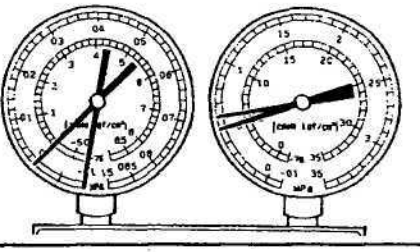

I01449

Symptom seen in refrigeration system	Probable cause	Diagnosis	Remedy
• Vacuum indicated on tow pressure side, very low pressure indicated on high pressure side • Frost or dew seen on piping before and after receiver/drier or expansion valve	• Refrigerant flow obstructed by moisture or dirt in refrigeration system • Refrigerant flow obstructed by gas leakage from expansion valve	Refrigerant does not circulate	(1) Check expansion valve (2) Clean out dirt in expansion valve by blowing with air (3) Replace condenser (4) Evacuate air and charge new refrigerant to proper amount (5) For gas leakage from expansion valve, replace expansion valve

(6) Refrigerant overcharged or insufficient cooling of condenser

Condition: Insufficient cooling

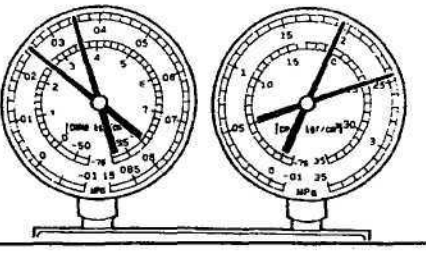

I01390

Symptom seen in refrigeration system	Probable cause	Diagnosis	Remedy
• Pressure too high on both tow and high pressure sides • No sir bubbles seen through the sight glass even when the engine rpm is lowered	• Unable to develop sufficient performance due to excessive • Insufficient cooling of condenser	• Excessive refrigerant in cycle→refrigerant overcharged • Condenser cooling insufficient→condenser fins clogged of cooling fan faulty	(1) Clean condenser (2) Check cooling fan with fluid coupling operation (3) If (1) and (2) are in normal state, check amount of refrigerant Charge proper amount of refrigerant

AC

(7) Air present in refrigeration system

Condition: Insufficient cooling

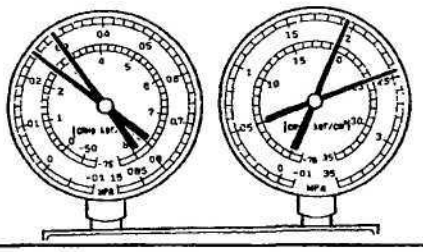

NOTE : These gauge indications are shown when the refrigeration system has been opens and the refrigerant charged without vacuum purging.

I01392

Symptom seen in refrigeration system	Probable cause	Diagnosis	Remedy
• Pressure too high on both low and high pressure sides • The low pressure piping hot to the touch • Bubbles seen in sight glass	Air entered in refrigeration system	• Air present in refrigeration system • Insufficient vacuum purging	(1) Check compressor oil to see if it is see if it is dirty or insufficient (2) Evacuate air and charge new refrigerant

(8) Expansion valve improperly

Condition: Insufficient cooling

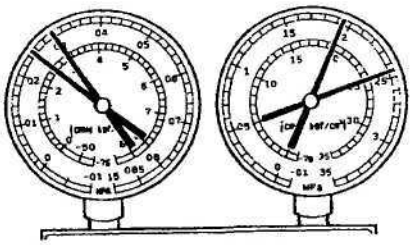

I01450

Symptom seen in refrigeration system	Probable cause	Diagnosis	Remedy
• Pressure too high on both low and high pressure sides • Frost or large amount of dew on piping on tow pressure side	Trouble in expansion valve	• Excessive refrigerant in low pressure piping • Expansion valve opened too wide	Check expansion valve Replace if defective

(9) Defective compression compressor

Condition : Does not cool

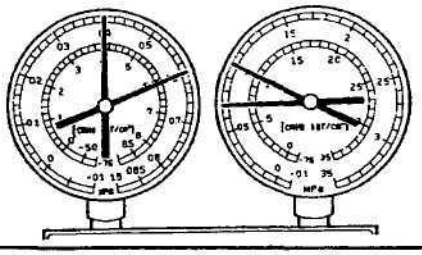

I01393

Symptom seen in refrigeration system	Probable cause	Diagnosis	Remedy
• Pressure too high on low high pressure sides • Pressure too low to on high pressure side	Internal leak in compressor	• Compression defective • Valve leaking or broken sliding parts	Repair or replace compressor

3. INSPECT IDLE-UP SPEED

(a) Warm up engine.

(b) Inspect idle–up speed when the these conditions are established.

- Warm up engine
- Blower speed control switch at "HI" position
- A/C switch ON
- Temperature control dial at "COOL" position

1ZZ-FE engine models (M/T):

Magnetic clutch condition	Idle–up speed
Magnetic clutch not engaged	700 ± 50 rpm
Magnetic clutch engaged	900 ± 50 rpm

If idle speed is not as specified, check Idle control system.

1ZZ-FE engine models (A/T):

Magnetic clutch condition	Idle–up speed
Magnetic clutch not engaged	750 ± 50 rpm
Magnetic clutch engaged	900 ± 50 rpm

If idle speed is not as specified, check Idle control system.

2ZZ–FE engine models (M/T):

Magnetic clutch condition	Idle–up speed
Magnetic clutch not engaged	750 ± 50 rpm
Magnetic clutch engaged	850 ± 50 rpm

If idle speed is not as specified, check Idle control system.

2ZZ-FE engine models (A/T):

Magnetic clutch condition	Idle–up speed
Magnetic clutch not engaged	650 ± 50 rpm
Magnetic clutch engaged	850 ± 50 rpm

If idle speed is not as specified, check Idle control system.

AC

4. INSPECT FOR LEAKAGE OF REFRIGERANT

(a) Perform in these conditions:
- Stop engine.
- Secure good ventilation (If not the gas leak detector may react to volatile gases witch are not refrigerant, such as evaporated gasoline and exhaust gas.)
- Repeat the test 2 or 3 times.
- Make sure that there is some refrigerant remaining in the refrigeration system.
  When compressor is OFF: approx. 392 - 588 kPa (4 – 6 kgf/ cm^2, 57 – 85 psi)

(b) Bring the gas leak detector close to the drain hose before performing the test.

HINT:
- After the blower motor stopped, leave the cooling unit for more than 15 minutes.
- Expose the gas leak detector sensor the under the drain hose.
- When bring the gas leak detector close to the drain hose, make sure that the gas leak detector does not react to the volatile gases.

If such reaction is unavoidable, the vehicle must be lifted up.

(c) If gas leak is not detected on the drain hose, remove the blower resistor from the cooling unit. Then insert the gas leak detector sensor into the unit and perform the test.

(d) Disconnect the connector and leave the pressure switch for approx. 20 minutes. Then bring the gas leak detector close to the pressure switch and perform the test.

(e) Bring the gas leak detector close to the refrigerant lines and perform the test.

AC0C4-05

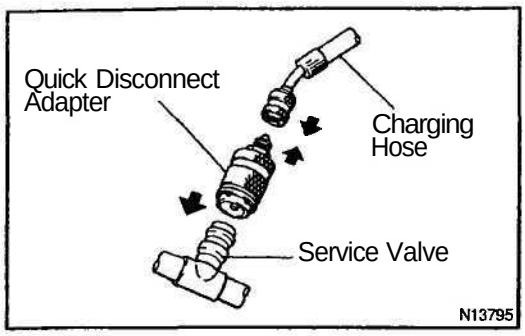

EVACUATING

1. CONNECT QUICK DISCONNECT ADAPTER TO CHARGING HOSES

2. REMOVE CAPS FROM SERVICE VALVES ON REFRIGERANT LINES

3. SET ON MANIFOLD GAUGE SET

(a) Close both hand valves of manifold gauge set.

(b) Connect the quick disconnect adapters to the service valves.

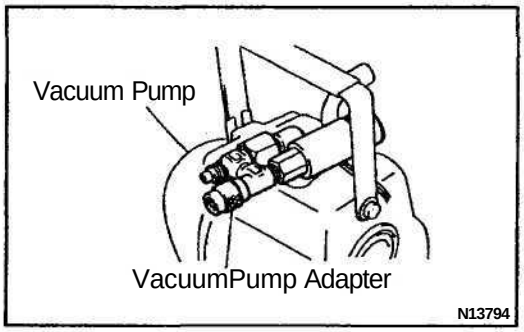

4. EVACUATE AIR FROM REFRIGERATION SYSTEM

(a) Connect the vacuum pump adapter to the vacuum pump.

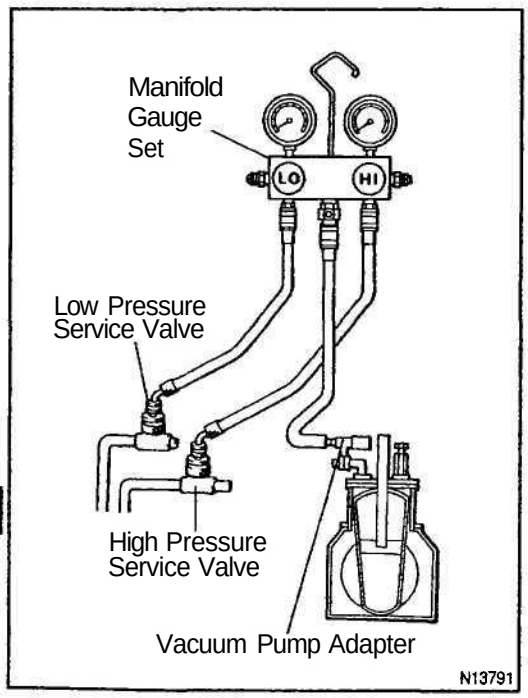

(b) Connect the center hose of the manifold gauge set to the vacuum pump adapter.

(c) Open both the high and low hand valves and run the vacuum pump.

(d) After 10 minutes or more, check that the low pressure gauge indicates 750 mmHg (30 in. Hg) or more.

HINT:

If the reading 750 mmHg (30 in. Hg) or more, close both hand valves of manifold gauge set and stop the vacuum pump.

Check the system for leaks and repair necessary.

(e) Close both the high and low hand valves and stop the vacuum pump.

(f) Leave the system in this condition for *5* minutes or more and check that there is no gauge indicator.

AC

AC2GU-01

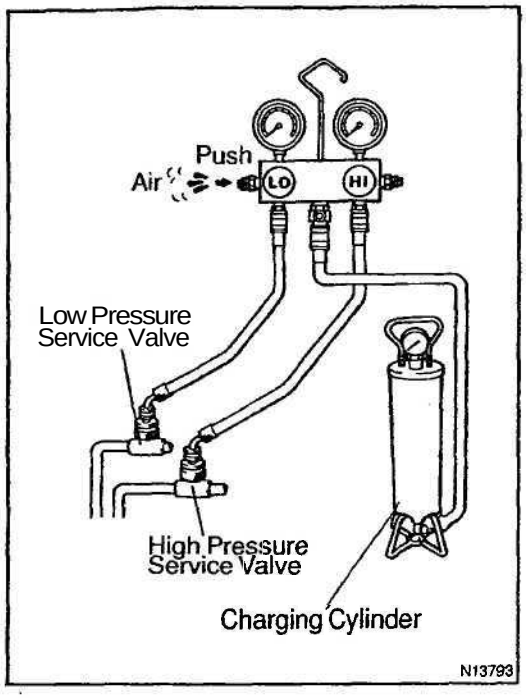

CHARGING

1. INSTALL CHARGING CYLINDER

HINT:

When handling the charging cylinder, always follow the directions given in the instruction manual.

(a) Charge the proper amount of refrigerant into the charging cylinder.

(b) Connect the center hose to the charging cylinder.

CAUTION:

Do not open both high and low hand valves of manifold gauge set.

(c) Open the valve of charging cylinder.

(d) Press the valve core on the side of manifold gauge and expel the air inside of the center hose.

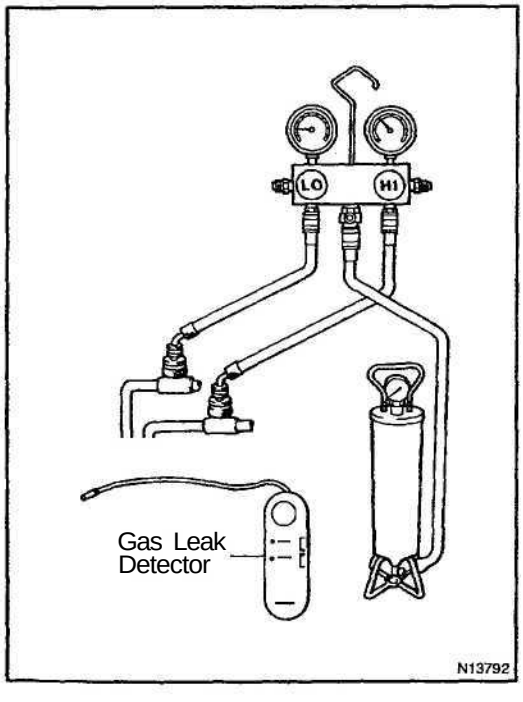

2. INSPECT REFRIGERATION SYSTEM FOR LEAKS

(a) Open the high pressure hand valve and charge refrigerant.

(b) When the low pressure gauge indicates 98 kPa (1 kgf/cm^2, 14 psi) close the high pressure hand valve.

(c) Using a gas leak detector, check the system for leakage.

CAUTION:

Use the refrigerant recovery/recycling machine to recover the refrigerant whenever replacing parts.

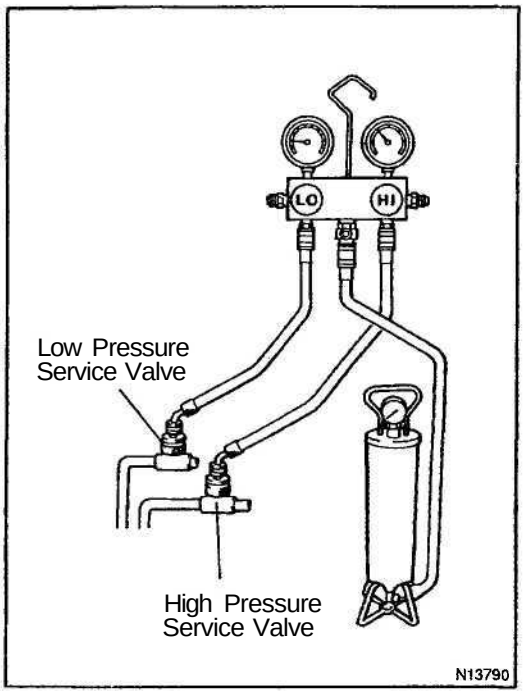

3. CHARGE REFRIGERANT INTO REFRIGERANT SYSTEM

If there is no leak after refrigerant leak check, charge the proper amount of refrigerant into refrigeration system.

CAUTION:

- **Never run the engine when charging the system through the high pressure side.**
- **Do not open the low pressure hand valve when the system is being charged with liquid refrigerant.**

(a) Open the high pressure hand valve fully.

(b) Charge specified amount of refrigerant, then close the high pressure hand valve.

HINT:

A fully charged system is indicated by the sight glass being free of any bubbles.

(c) Charge partially refrigeration system with refrigerant.

(1) Set vehicle in these condition:

- Running engine at 1,500 rpm
- Blower speed control switch: "HI"
- Temperature control selector: "MAX. COOL"
- Air inlet control selector: "RECIRC"
- Fully open doors (Sliding roof: closed)

(2) Open the low pressure hand valve.

CAUTION:

Do not open the high pressure hand valve.

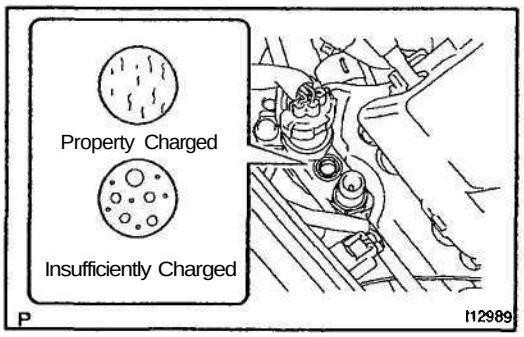

(d) Charge refrigerant until bubbles disappear and check the pressure on the gauge through the sight glass.

(e) Replenishment to be 100 ± 50 g after bubbles disapper.

AC0C6-06

LOCATION

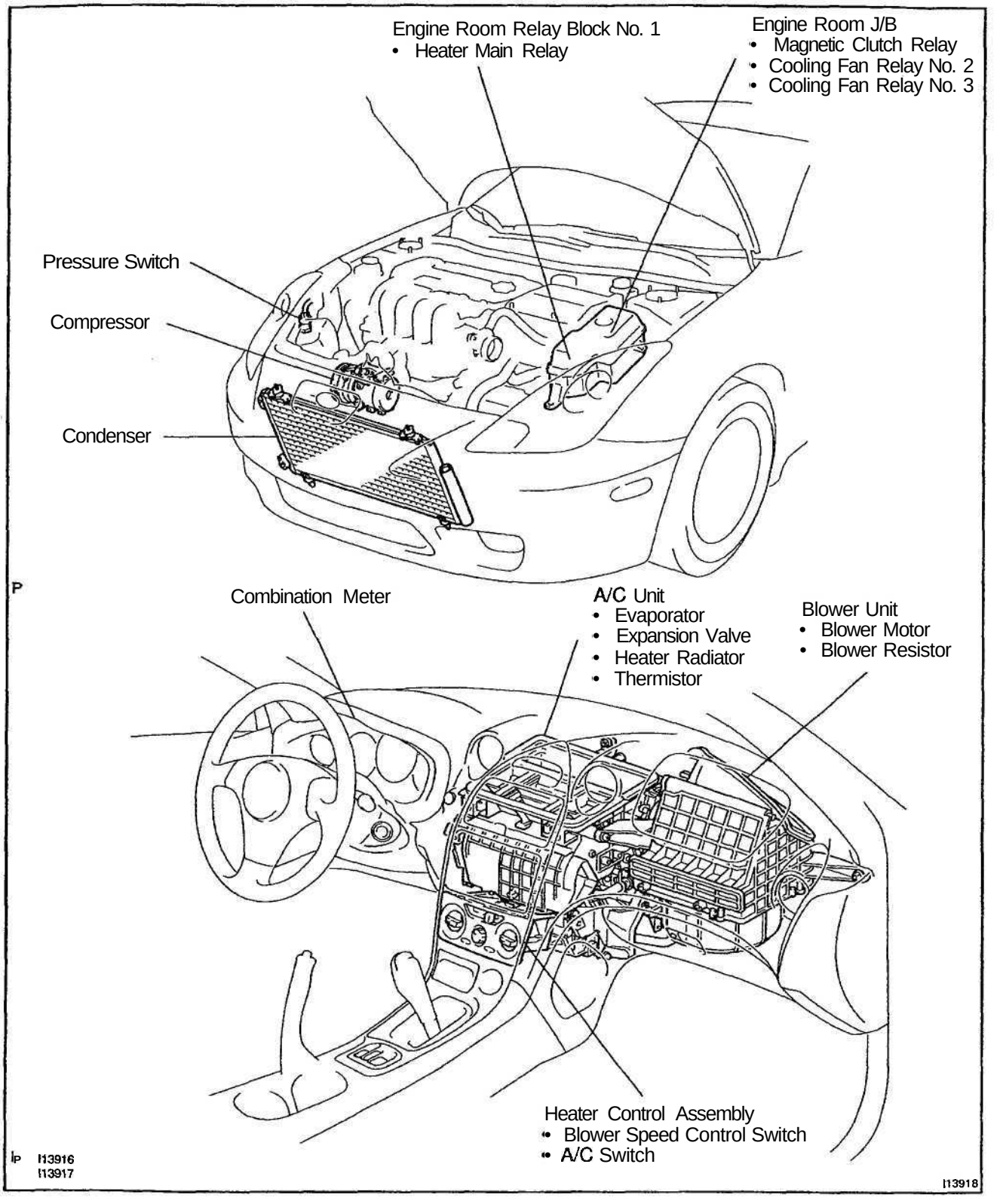

TROUBLESHOOTING

AC1FO–02

PROBLEM SYMPTOMS TABLE

Use the table below to help you find the cause of the problem. The numbers indicate the priority of the likely cause of the problem. Check each part in order. If necessary, replace these parts.

Symptom	Suspect Area	See page
No blower operation	1. HTR Fuse	–
	2. Heater main relay	AC–54
	3. Blower motor	AC–48
	4. Blower resistor	AC–49
	5. Blower speed control switch	AC–68
	6. Wire harness	–
No blower control	1. Blower motor	AC–48
	2. Blower resistor	AC–49
	3. Blower speed control switch	AC–68
	4. Wire harness	–
No air temperature	1. Engine coolant volume	–
	2. Heater control assembly	AC–65
No compressor operation	1. Refrigerant volume	AC–3
	2. A.C Fuse	–
	3. Magnetic clutch	AC–35
	4. Compressor lock sensor	AC–35
	5. Compressor	AC–35
	6. Pressure switch	AC–51
	7. Heater main relay	AC–54
	8. Blower speed control switch	AC–68
	9. Heater control assembly	AC–65
	10. Thermistor	AC–50
	11. Wire harness	–
No cool air comes out	1. Refrigerant volume	AC–3
	2. Refrigerant pressure	AC–3
	3. Drive belt	AC–16
	4. Magnetic clutch	AC–35
	5. Compressor lock sensor	AC–35
	6. Pressure switch	AC–51
	7. Thermistor	AC–50
	8. Heater control assembly	AC–65
	9. Wire harness	–
Insufficient cooling	1. Refrigerant volume	AC–3
	2. Drive belt	AC–16
	3. Magnetic clutch	AC–35
	4. Compressor	AC–35
	5. Condenser	AC–43
	6. Expansion Valve	AC–24
	7. Evaporator	AC–28
	8. Refrigerant lines	AC–21
	9 Pressure switch	AC–51
	10. A/C amplifier	AC–68
	11. Heater control assembly	AC–65
No engine idle–up when A/C switch ON	1. Heater control assembly	AC–65
	2. Engine (and ECT) ECU	-
	3. Idle control system	-
	4. Wire harness	-
No air inlet control	1. Heater control assembly	AC–65
	2. Wire harness	–

No mode control	1. Heater control assembly 2. Wire harness	AC–65 –
Blinking of A/C indicator	1. Compressor 2. Drive belt 3. Compressor lock sensor 4. Heater control assembly	AC–35 AC–16 AC–35 AC–65
Brightness does not change when light control switch is turned	1. Headlight and taillight system 2. Heater control assembly	BE–17 AC–65

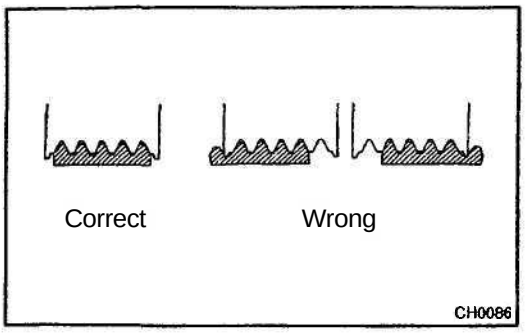

DRIVE BELT

ON–VEHICLE INSPECTION

AC2GV–01

INSPECT DRIVE BELT'S INSTALLATION CONDITION

Check that the drive belt fits properly in the ribbed grooves.

AC1FP–02

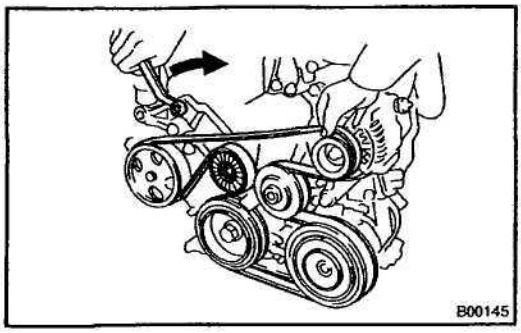

REMOVAL

REMOVE DRIVE BELT

Loosen the drive belt tension by turning the drive belt tensioner arm clockwise, and remove the drive belt.

AC1FQ-02

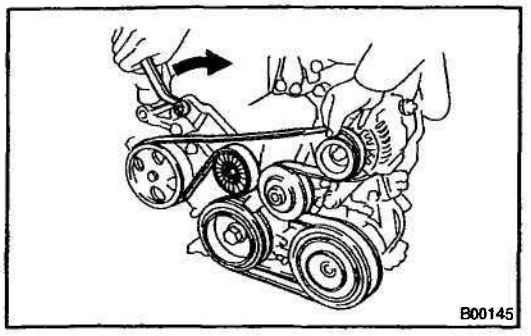

INSTALLATION

1. INSTALL DRIVE BELT

Turning the drive belt tensioner arm clockwise, and install the drive belt.

2. CHECK DRIVE BELT INSTALLING CONDITION

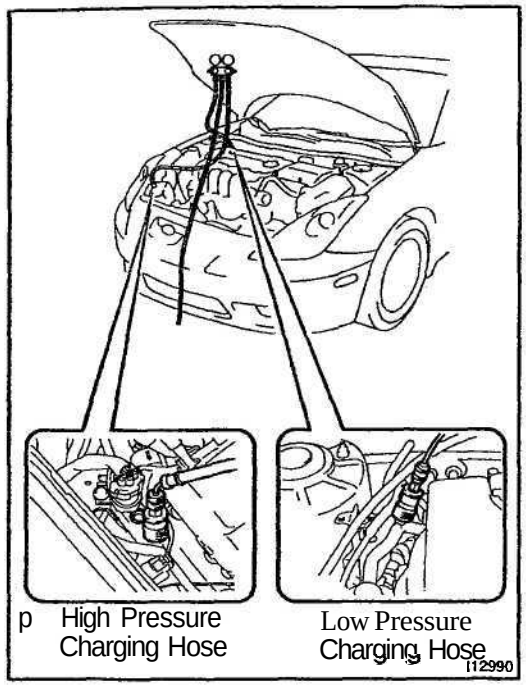

MANIFOLD GAUGE SET

AC0GA-04

SET ON

1. CONNECT CHARGE HOSE TO MANIFOLD GAUGE SET

Tighten the nuts by hand.

CAUTION:

Do not connect the wrong hoses.

2. CONNECT QUICK DISCONNECT ADAPTER TO CHARGING HOSES

Tighten the nuts by hand.

3. CLOSE BOTH HAND VALVE OF MANIFOLD GAUGE SET

4. REMOVE CAPS FROM SERVICE VALVE ON REFRIGERANT LINE

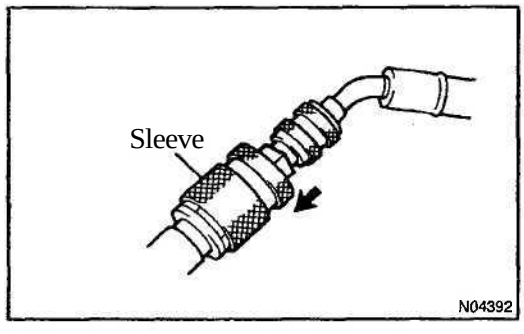

5. CONNECT QUICK DISCONNECT ADAPTER TO SERVICE VALVES

HINT:

Push the quick disconnect adapter onto the service valve, then slide, then slide the sleeve of the quick disconnect adapter downward to lock it.

AC1FR-02

LOCATION

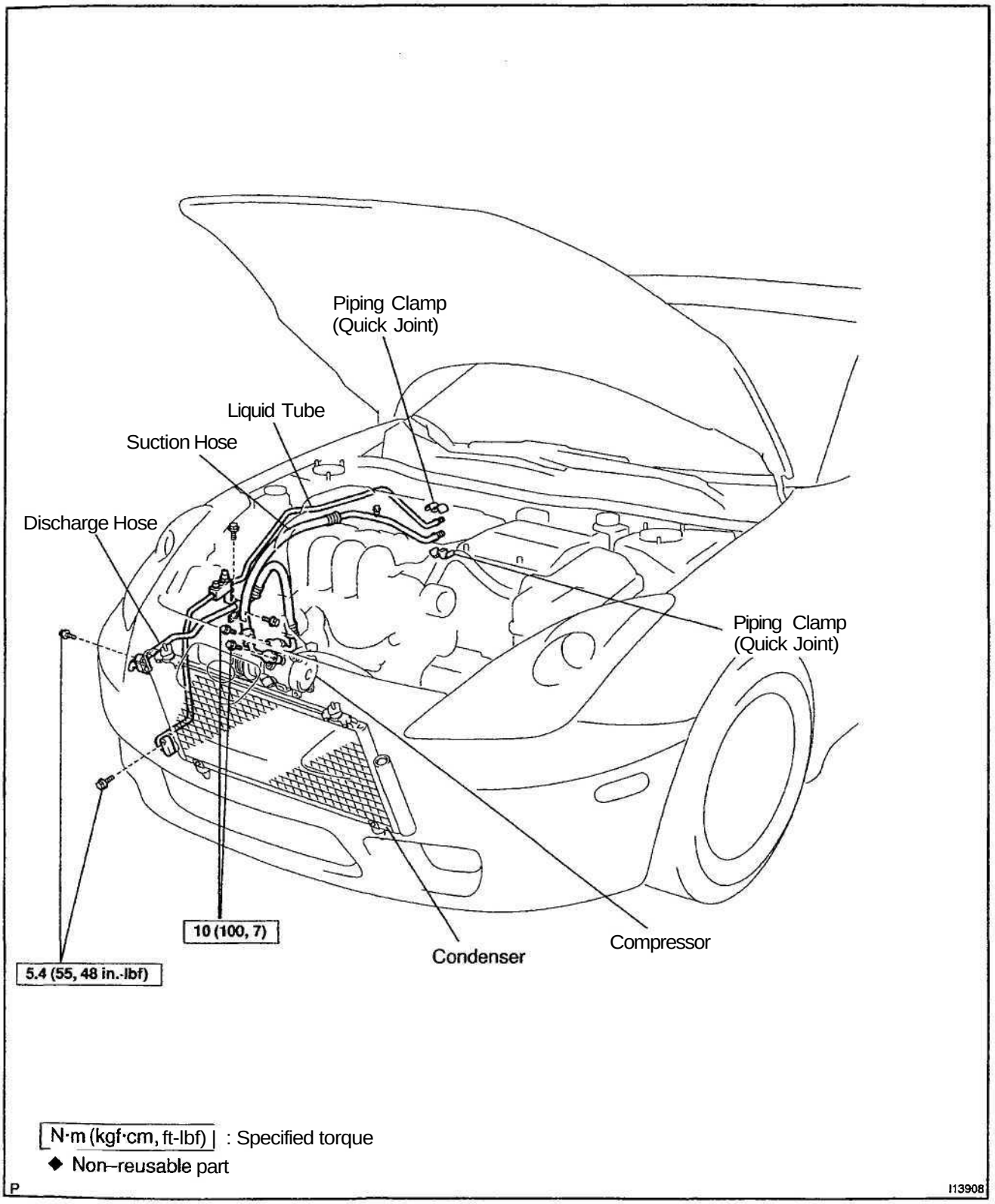

N·m (kgf·cm, ft-lbf) : Specified torque
◆ Non–reusable part

P

I13908

REPLACEMENT

1. DISCHARGE REFRIGERANT FROM REFRIGERATION SYSTEM

2. REPLACE FAULTY TUBE OR HOSE

NOTICE:

Cap the open fittings immediately to keep moisture or dirt out of the system.

3. TORQUE CONNECTIONS TO SPECIFIED TORQUE

NOTICE:

Connections should not be torqued tighter than the specified torqued.

Part tightened	N·m	kgf·cm	ft-lbf
Condenser x Discharge tube	5.4	55	48 in.·lbf
Condenser x Liquid tube	5.4	55	48 in.·lbf
Compressor x Discharge tube	10	100	7
Compressor x Suction tube	10	100	7
Expansion valve x Evaporator	5.4	55	48 in.-lbf

4. EVACUATE AIR IN REFRIGERATION SYSTEM AND CHARGE WITH REFRIGERANT

Specified amount: 430 ± 30 g (15.17 ± 1.06 oz.)

5. INSPECT FOR LEAKAGE OF REFRIGERANT

Using a gas leak detector, check for leakage of refrigerant.

6. INSPECT AIR CONDITIONING OPERATION

AIR CONDITIONING UNIT

ON–VEHICLE INSPECTION

AC2GW–01

INSPECT FOR LEAKAGE OF REFRIGERANT

(a) Remove the glove compartment door (See page BO–79).
(b) Remove the blower unit.
(c) Using a gas leak detector, check for leakage of refrigerant.

If there is leakage, check the tightening torque at the joints or check the evaporator, expansion valve, A/C tube and O–rings.

AC2GX-01

COMPONENTS

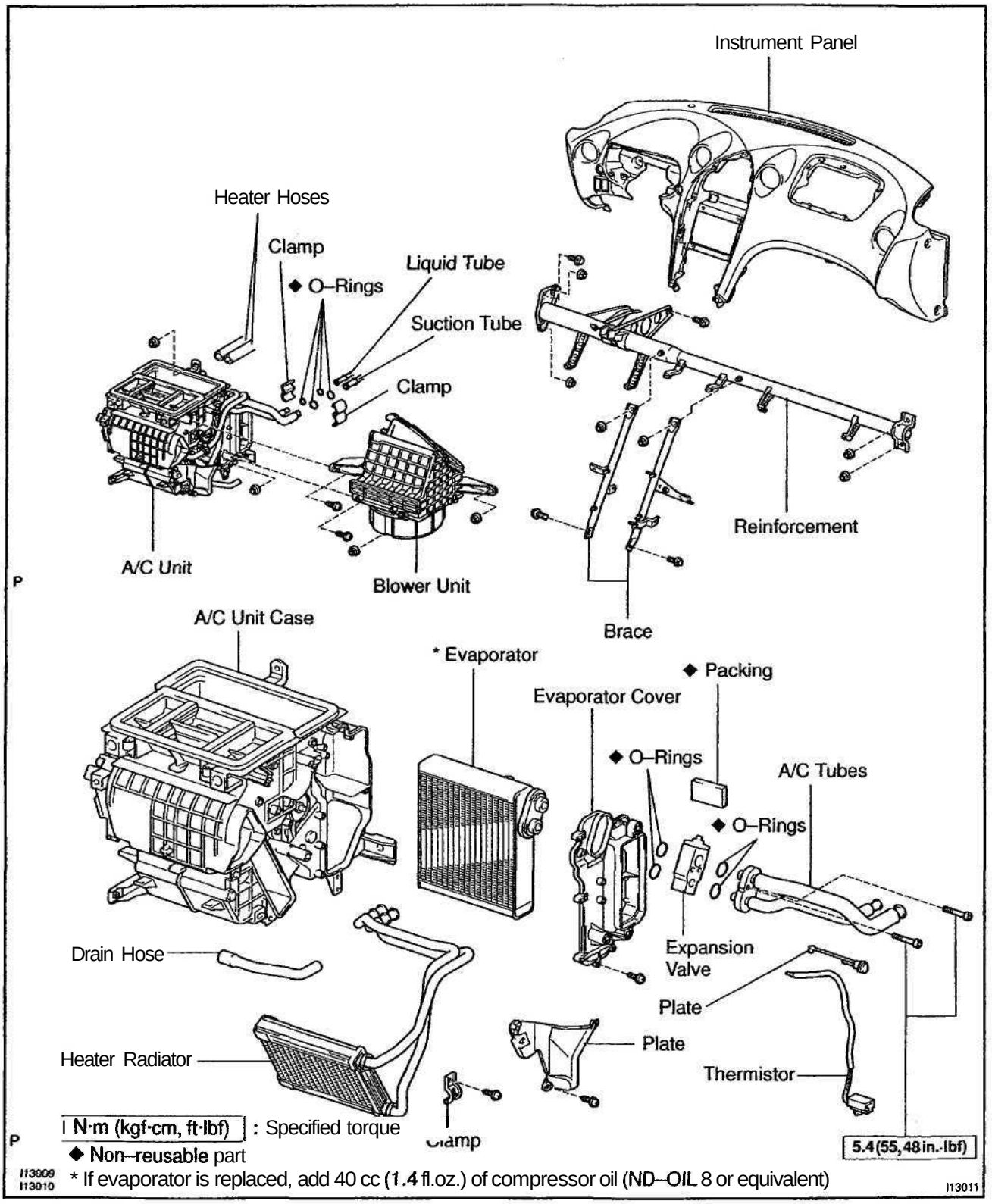

AC2GY-01

REMOVAL

1. DISCHARGE REFRIGERANT FROM REFRIGERATION SYSTEM

HINT:
At the time of installation, please refer to the following item.
Evacuate air from refrigeration system.
Charge system with refrigerant and inspect for leakage of refrigerant.

Specified amount: 430 ± 30 g (15.17 ± 1.06 oz.)

2. DRAIN ENGINE COOLANT FROM RADIATOR

HINT:
It is not necessary to drain out all coolant.

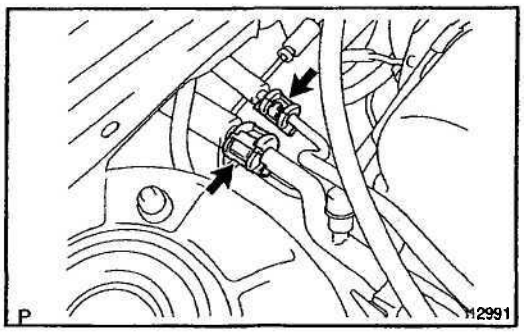

3. DISCONNECT LIQUID TUBE AND SUCTION HOSE

(a) Using SST, remove the 2 piping clamps.
SST 09870–00015 (Suction tube)
09870–00025 (Liquid tube)

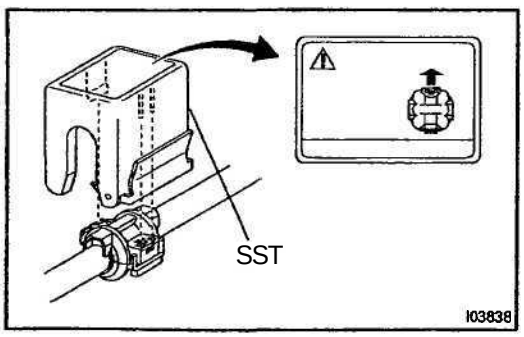

(1) Insert SST to piping clamp.

HINT:
Confirm the direction of the piping clamp claw and SST using the illustration showing on the caution label.

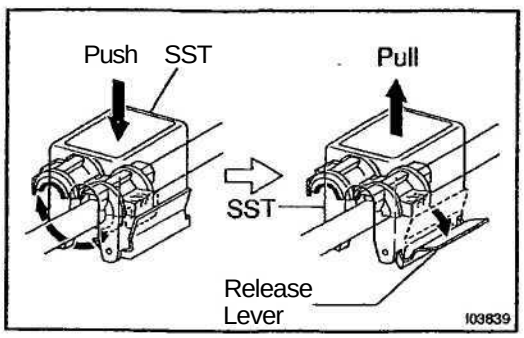

(2) Push down SST and release the clamp lock.

NOTICE:
Be careful not to deform the tubes, when pushing SST.

(3) Pull SST slightly and push the release lever, then remove the piping clamp with SST.
(4) Remove the piping clamp from SST.

(b) Disconnect the both tubes.

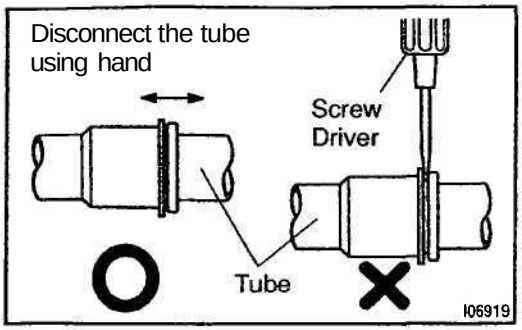

NOTICE:

- **Do not use tools like screwdriver to remove the tube.**
- **Cap the open fittings immediately to keep moisture or dirt out of the system.**

4. REMOVE INSTRUMENT PANEL AND REINFORCEMENT (See page BO–79)

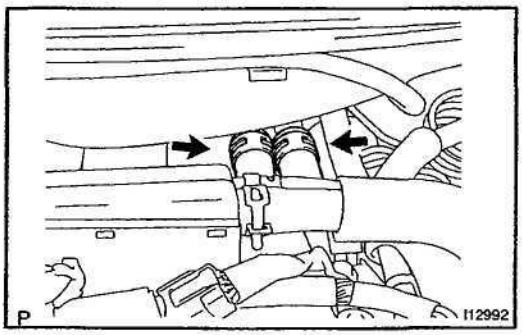

5. DISCONNECT WATER HOSES FROM HEATER RADIATOR PIPES

(a) Using pliers, grip the claw of the hose clip and slide the hose clip along the hose.

(b) Disconnect the heater hoses.

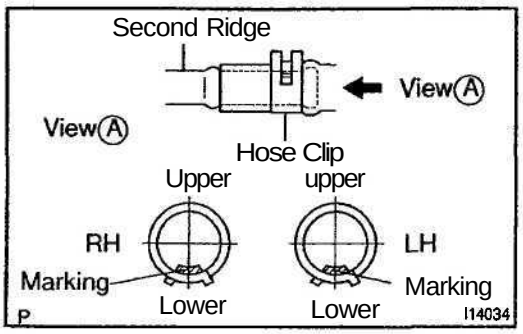

HINT:

At the time of installation, please refer to the following item.

Push the water hose onto the heater radiator pipe as far as second ridge on the pipe and install the hose clip.

6. REMOVE BLOWER UNIT (See page AC–31)

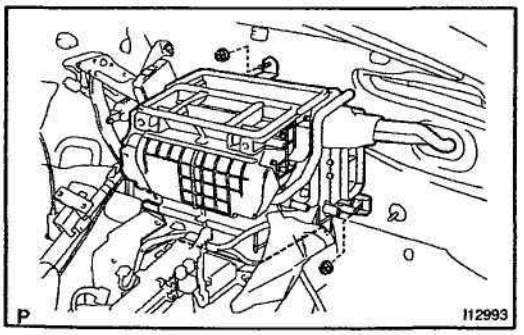

7. REMOVE A/C UNIT

(a) Disconnect the connectors.

(b) Remove the 2 nuts and A/C unit.

INSPECTION

1. INSPECT EVAPORATOR

(a) Check evaporator fins for blockage.

If the fins are clogged, clean them with compressed air.

NOTICE:

Never use water to clean the evaporator.

(b) Check fitting for cracks or scratches.

If necessary, repair or replace.

2. INSPECT HEATER RADIATOR

Inspect fins for blockage.

If the fins are clogged, clean them with compressed air.

AC2H0-01

INSTALLATION

Installation is in the reverse order of removal (See page AC–26).

HOWEVER, NOTE THAT THE FOLLOWING PROCEDURES SHOULD BE SURELY CONDUCTED

(a) Remove the joint of the heater outlet hose from the heater pipe.

HINT:

Do not detach the other joint on the engine side.

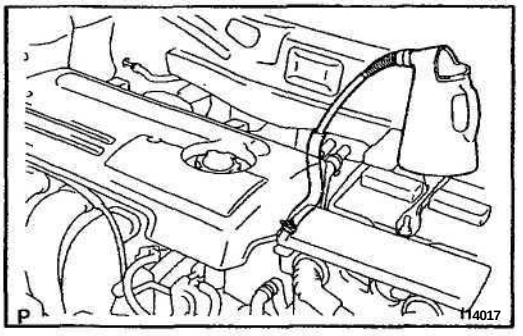

(b) Hold the removed heater hose with the end facing up, pour LLC into the hose.

(c) Pour LLC until it flows into the reverse tank from the hose at the bottom.

(d) When this happens, stop pouring and reinstall the heater hose to the heater pipe.

(e) Perform air bleeding in the same manner when LLC is replaced (See page CO–2).

HINT:

Note that the amount of LLC removed from the heater parts should be added.

Additional amount (example):
Heater core: approx. 350 cc
Heater pipe: approx. 200 cc
Heater hose: approx. 70 cc

BLOWER UNIT

COMPONENTS

AC1G5-02

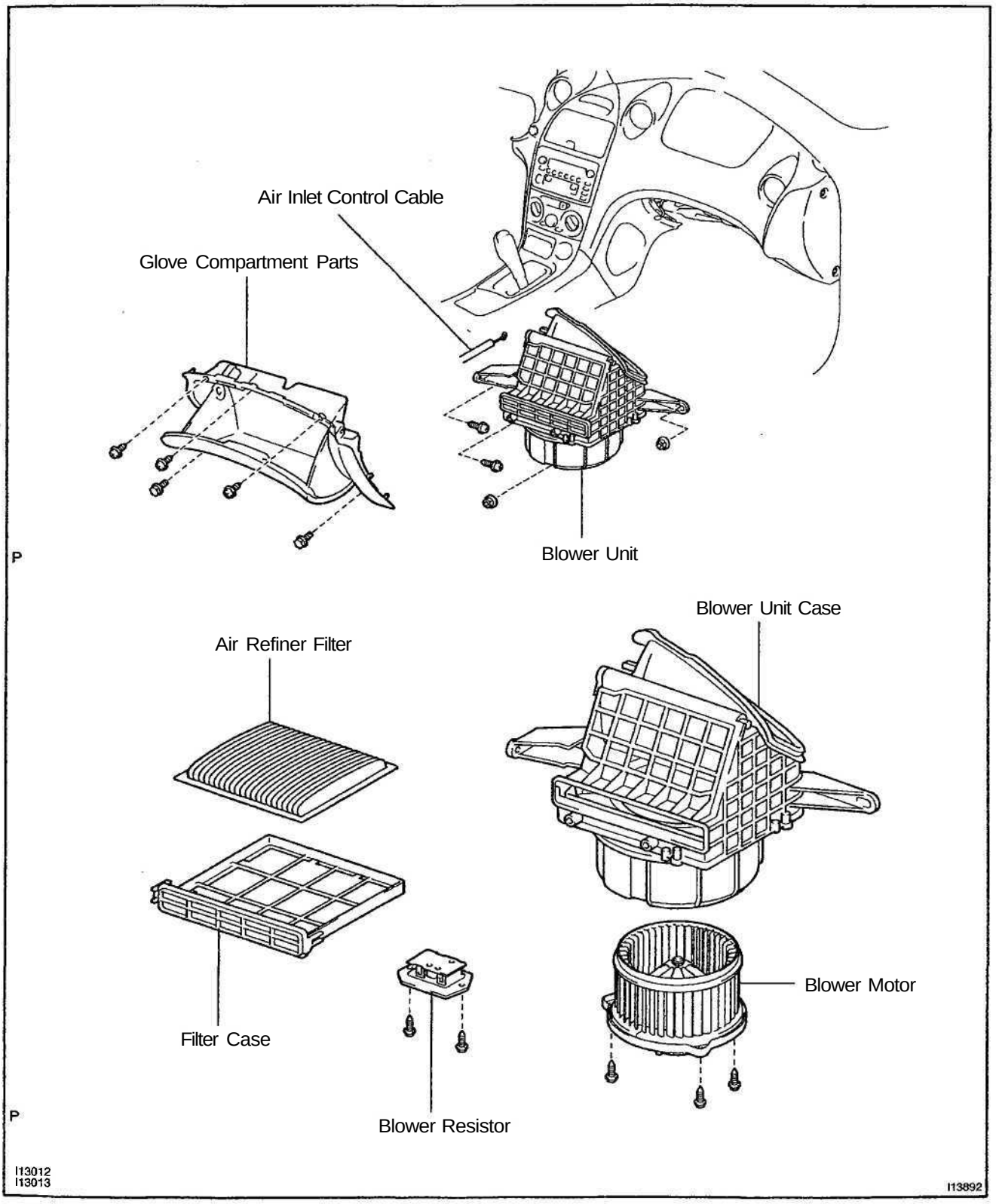

AC1G5-02

REMOVAL

1. REMOVE GLOVE COMPARTMENT PARTS
(See page BO–79)

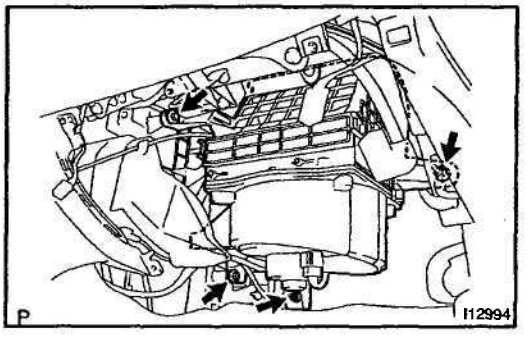

2. **REMOVE BLOWER UNIT**

(a) Disconnect the connector and air inlet control cable.
(b) Remove wire harness clamp.
(c) Remove the 2 screws, *2* nuts and the blower unit.

AC1G8-02

COMPONENTS

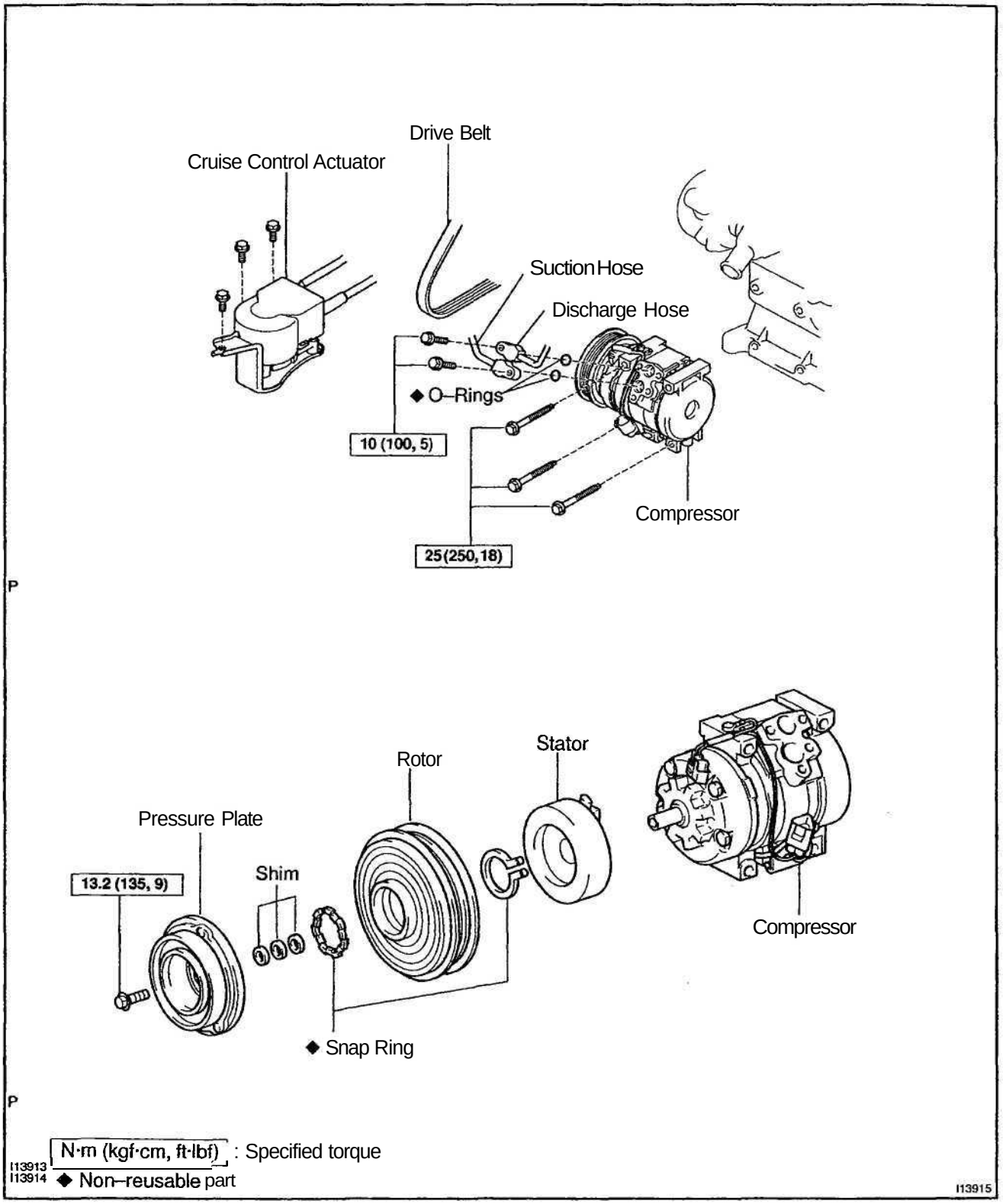

AC2H2-01

REMOVAL

1. **RUN ENGINE AT IDLE SPEED WITH A/C ON FOR APPROX. 10 MINUTES**
2. **STOP ENGINE**
3. **DISCONNECT NEGATIVE (-) TERMINAL CABLE FROM BATTERY**
4. **DISCHARGE REFRIGERANT FROM REFRIGERATION SYSTEM**
5. **REMOVE DRIVE BELT (See page AC–17)**
6. **DISCONNECT CRUISE CONTROL ACTUATOR CONNECTOR**
7. **REMOVE 3 CRUISE CONTROL ACTUATOR SET BOLTS**

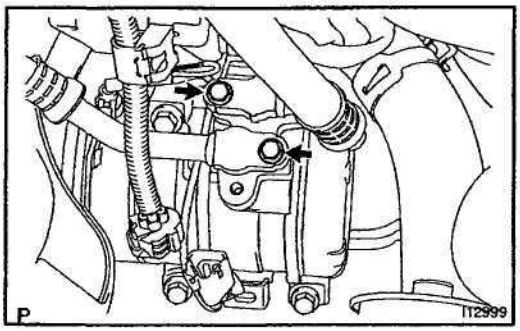

8. DISCONNECT DISCHARGE AND SUCTION HOSES

Remove the 2 bolts and disconnect the both hoses.

NOTICE:

Cap the open fittings immediately to keep moisture or dirt out of the system.

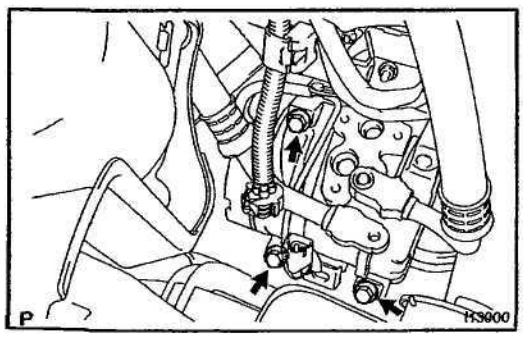

9. REMOVE COMPRESSOR

(a) Disconnect the connector.
(b) Disconnect the wire harness clamp.
(c) Remove the 3 bolts and compressor.

AC2H3-01

DISASSEMBLY

1. REMOVE PRESSURE PLATE

(a) Using SST and a socket wrench, remove the shaft bolt.
SST 07112-76060
Torque: 13.2 N·m (135 kgf·cm, 9 ft·lbf)

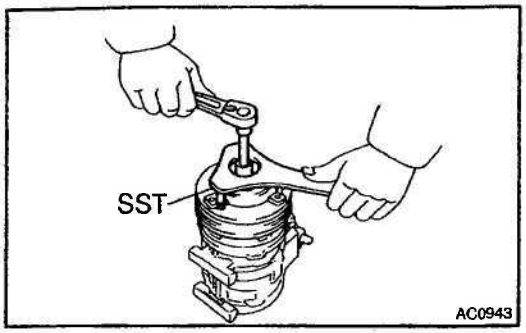

(b) Install SST on the pressure plate.
SST 07112–66040

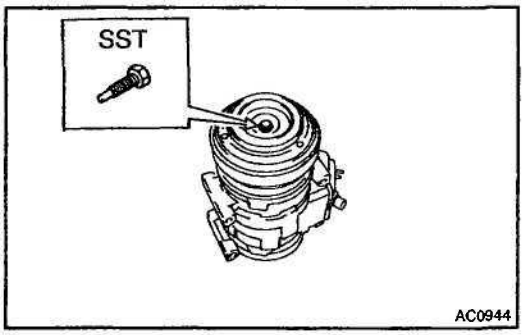

(c) Using SST and socket wrench, remove the pressure plate.
SST 07112–66040, 07112–76060

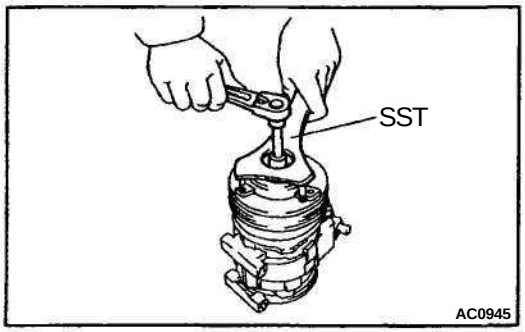

(d) Remove the shims from the pressure plate.

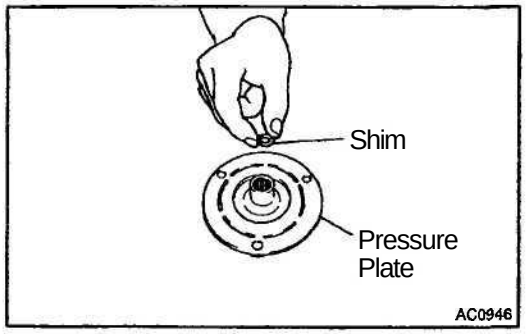

2. REMOVE ROTOR

(a) Using SST, remove the snap ring.
SST 07114–84020

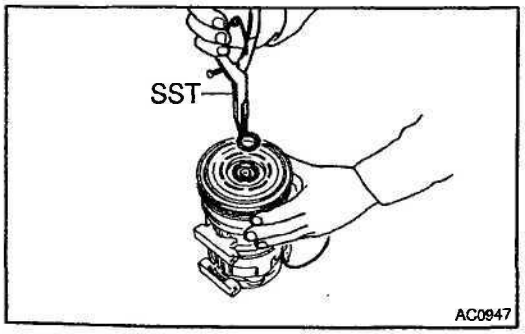

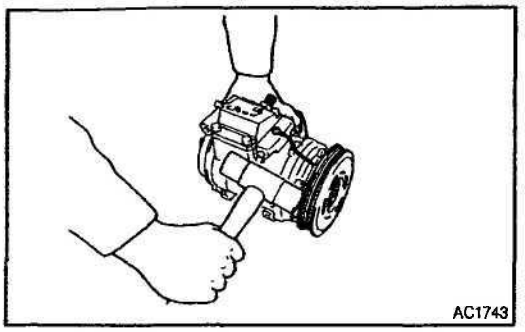

(b) Using a plastic hammer, tap the rotor off the shaft.

NOTICE:

Be careful not to damage the pulley when tapping on the rotor.

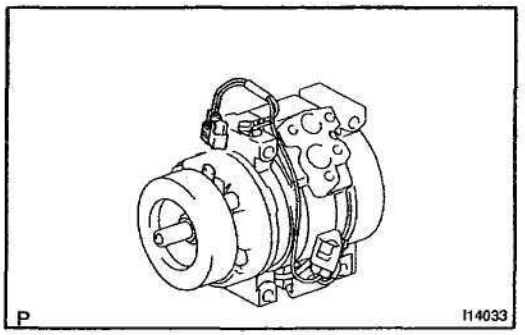

3. REMOVE STATOR

(a) Disconnect the connector from the stator.

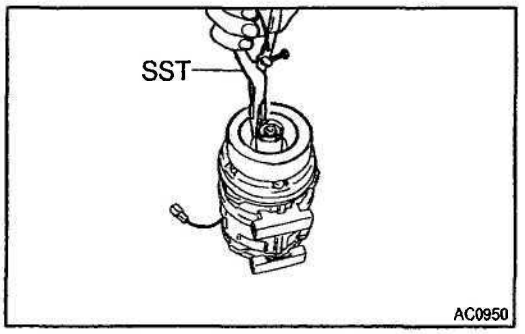

(b) Using SST, remove the snap ring.
SST 07114–84020

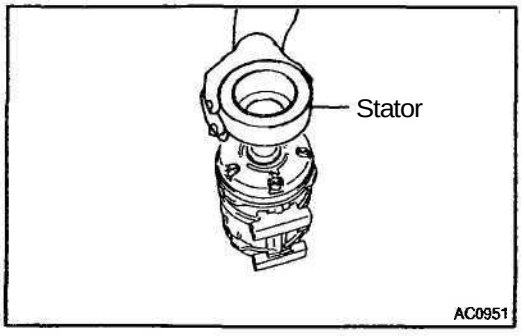

(c) Remove the stator.

AC2H4-01

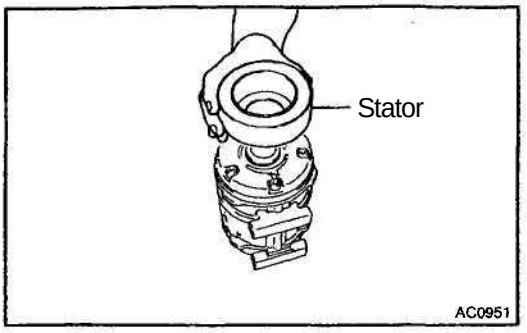

REASSEMBLY

1. INSTALL STATOR

(a) Install the stator.

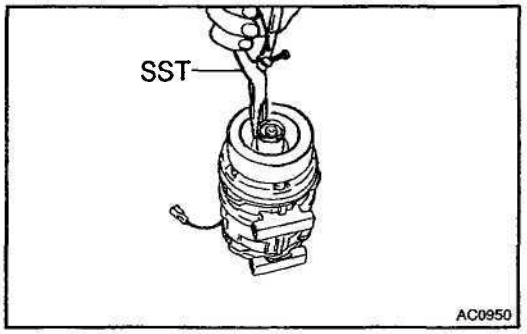

(b) Using SST, install the snap ring.
SST 07114–84020

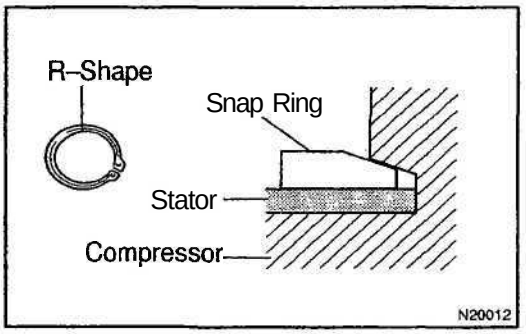

NOTICE:
The snap ring should be installed so that its beveled side faces up.

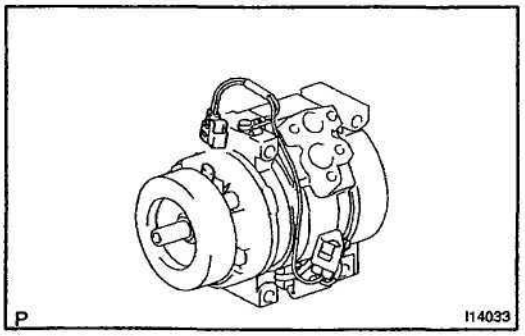

(c) Connect the connector to the stator.

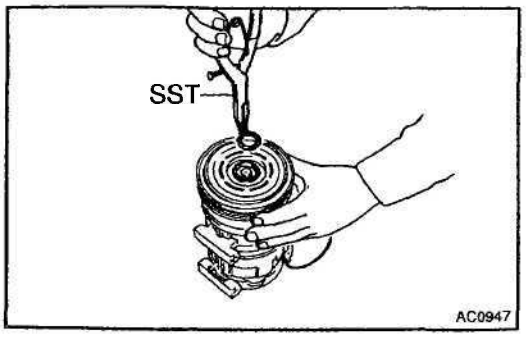

2. INSTALL ROTOR

(a) Install the rotor.

(b) Using SST, install the snap ring.
SST 07114–84020

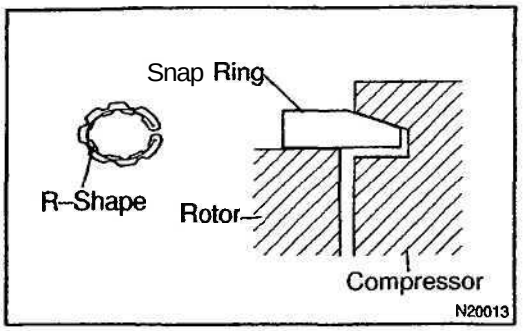

NOTICE:
The snap ring should be installed so that beveled side faces up.

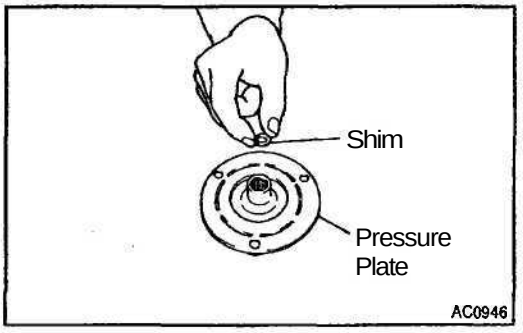

3. INSTALL PRESSURE PLATE

(a) Install the shims to the pressure plate and install the pressure plate on the rotor.

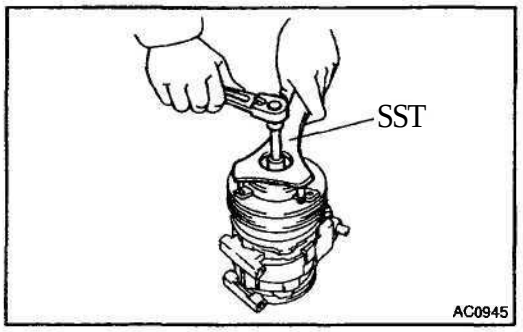

(b) Using SST and a torque wrench, install the shaft bolt.
SST 07112–66040, 07112–76060
Torque: 13.2 N·m (135 kgf·cm, 9 ft·lbf)

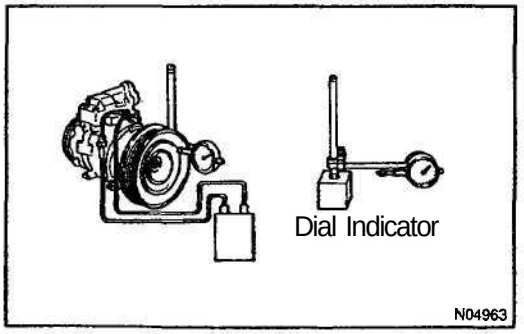

4. INSPECT MAGNETIC CLUTCH CLEARANCE

(a) Set the dial indicator to the pressure plate of the magnetic clutch.

(b) Connect the magnetic clutch lead wire to the positive (+) terminal of the battery.

(c) Check the clearance between the pressure plate and rotor when connecting the negative (–) terminal to the battery.

Standard clearance:
0.45 ± 0.10 mm (0.018 ± 0.004 in.)

If the clearance is not within the standard clearance, adjust the clearance using shims to obtain the standard clearance.

Shim thickness:
0.1 mm (0.004 in.)
0.3 mm (0.012 in.)
0.5 mm (0.020 in.)

INSTALLATION

1. INSTALL COMPRESSOR

(a) Install the compressor with 3 bolts.
Torque: 25 N·m (250 kgf cm, 18 ft-lbf)

(b) Connect the connector.

2. CONNECT DISCHARGE AND SUCTION HOSES

(a) Lubricate 2 new O–rings with compressor oil and install them to the hoses.

(b) Connect the both hoses with 2 bolts.
Torque: 10 N·m (100 kgf·cm, 7 ft·lbf)

NOTICE:

Hose should be connected immediately after the caps have been removed.

3. INSTALL 3 CRUISE CONTROL ACTUATOR SET BOLTS

4. CONNECT CRUISE CONTROL ACTUATOR CONNECTOR

5. INSTALL AND CHECK DRIVE BELT
(See page AC–18, AC–16)

6. CONNECT NEGATIVE (-) TERMINAL CABLE TO BATTERY

7. EVACUATE AIR FROM REFRIGERATION SYSTEM CHARGE SYSTEM WITH REFRIGERANT
Specified amount: 430 ± 30 g (15.17 ± 1.06 oz.)

8. INSPECT FOR LEAKAGE OF REFRIGERANT

Using a gas leak detector, check for leakage of refrigerant.
If there is leakage, check the tightening torque at the joints.

9. INSPECT A/C OPERATION

CONDENSER

AC1GJ-01

ON–VEHICLE INSPECTION

1. INSPECT CONDENSER FINS FOR BLOCKAGE OR DAMAGE

If the fins are clogged, wash them with water and dry with compressed air.

NOTICE:

Be careful not to damage the fins.

If the fins are bent, straighten them with a screwdriver or pliers.

2. INSPECT CONDENSER AND FITTINGS FOR LEAKAGE

Using a gas leak detector, check for leakage of refrigerant.

If there is leakage, check the tightening torque at the joints.

AC2H5–01

COMPONENTS

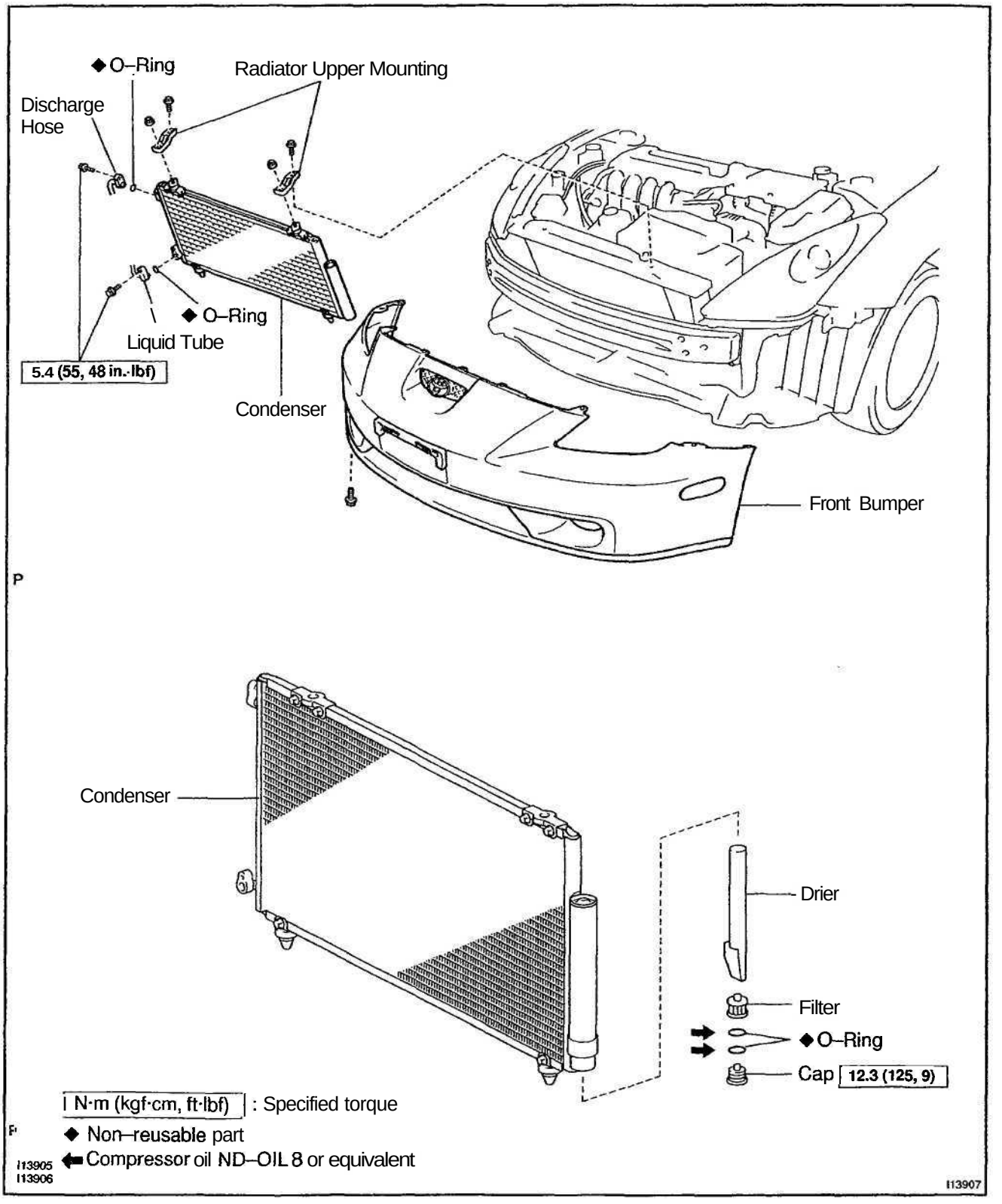

AC2H6-01

REMOVAL

1. DISCHARGE REFRIGERANT FROM REFRIGERATION SYSTEM

HINT:

At the time of installation, please refer to the following item.

Evacuate air from refrigeration system.

Charge system with refrigerant and inspect for leakage of refrigerant.

Specified amount: 430 ± 30 g (15.17 ± 1.06 oz.)

2. REMOVE FRONT BUMPER (See page BO–4)

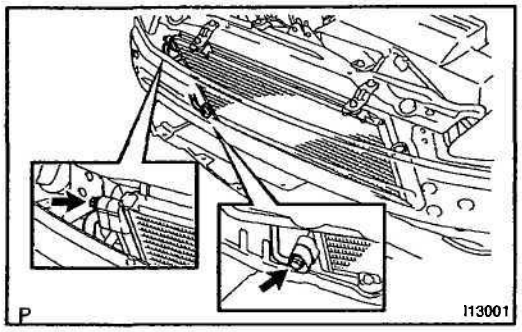

3. REMOVE LIQUID TUBE AND DISCHARGE HOSE

Remove 2 bolts and both tubes.

Torque: 5.4 N·m (55 kgf·cm, 48 in.·lbf)

NOTICE:

Cap the open fittings immediately to keep moisture out of the system.

HINT:

Lubricate 2 new O–rings with compressor oil and install them to the tubes.

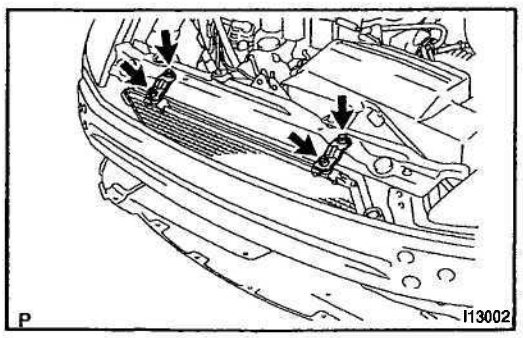

4. REMOVE RADIATOR UPPER MOUNTINGS

Remove the 2 bolts, 2 nuts and the 2 upper mountings.

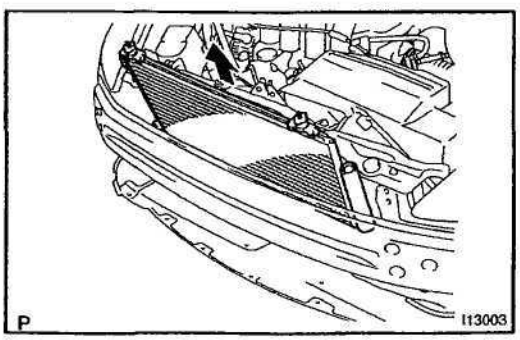

5. REMOVE CONDENSER

Pull out the condenser.

HINT:

At the time of installation, please refer to the following item.

If condenser was replaced, add compressor oil to the compressor.

Add: 40 cc (1.4 fl. oz.)

Compressor oil: ND–OIL 8 or equivalent

AC22C-04

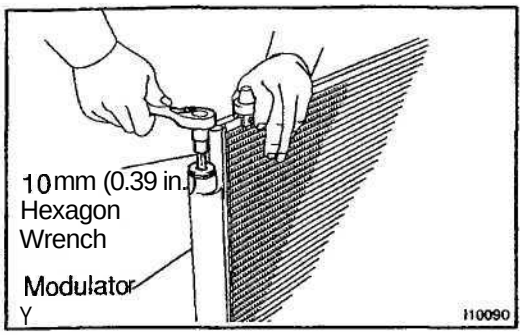

REPLACEMENT

REPLACE DRYER FROM MODULATOR

(a) Using a hexagon wrench (10 mm, 0.39 in.), remove the cap from the modulator.

(b) Remove the filter from the modulator.

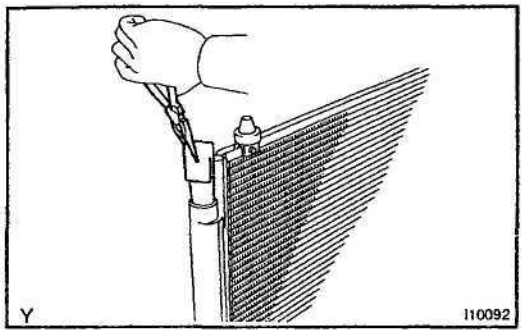

(c) Using pliers, remove the dryer.

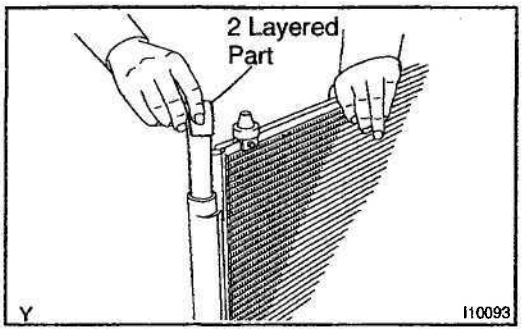

(d) Insert a new dryer into the modulator.

NOTICE:

- **Do not remove the dryer from a vinyl bag until inserting it into the modulator.**
- **Install the dryer with its 2 layered part faced upward to the modulator.**

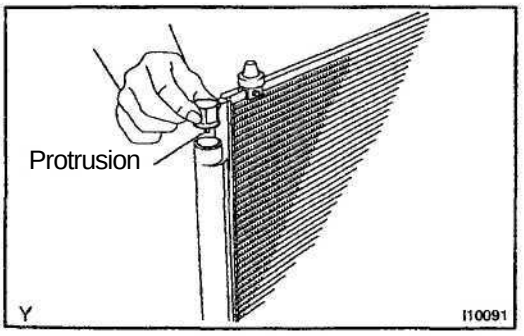

(e) Insert the filter into the modulator.

NOTICE:

Install the filter with its protrusion faced downward to the modulator.

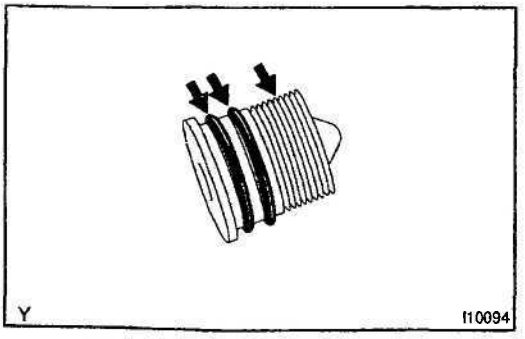

(f) Install the cap to the modulator.

(1) Apply compressor oil to the o-rings and screw part of the cap.

Compressor oil: ND-OIL 8 or equivalent

(2) Using a hexagon wrench (10 mm, 0.39 in.), install the caps.

Torque: 12.3 N·m (125 kgf·cm, 9 ft·lbf)

INSTALLATION

Installation is in the reverse order of removal (See page AC–45).

BLOWER MOTOR

INSPECTION

AC1GP-02

1. **REMOVE GLOVE COMPARTMENT PARTS**
   (See page BO–79)

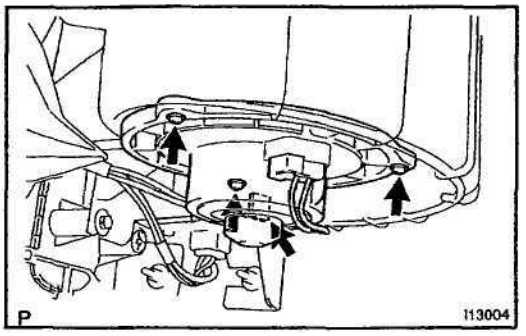

2. **REMOVE BLOWER MOTOR**
   (a) Remove the wire harness clamp and disconnect the connector.
   (b) Remove the 3 screws and motor.

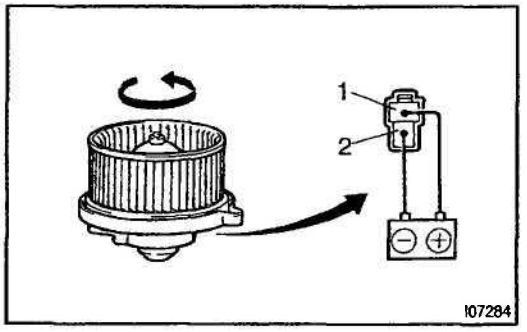

3. **INSPECT BLOWER MOTOR OPERATION**
   Connect the positive (+) lead from the battery to terminal 1 and the negative (-) lead to terminal 2, then check that the motor operations smoothly.
   If operation is not as specified, replace the blower motor.

4. **INSTALL BLOWER MOTOR**
   (a) Install the motor and 3 screws.
   (b) Connect the connector and wire harness clamp.

5. **INSTALL GLOVE COMPARTMENT PARTS**
   (See page BO–85)

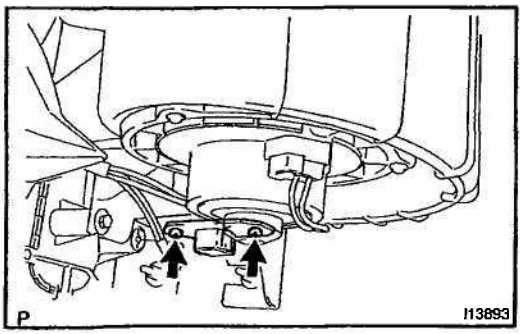

BLOWER RESISTOR INSPECTION

AC1GQ-02

1. REMOVE BLOWER RESISTOR

(a) Disconnect the connector.

(b) Remove the 2 screws and the blower resistor.

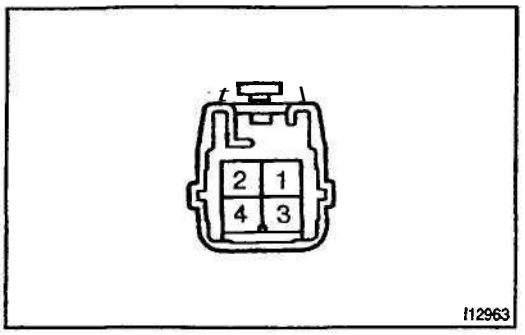

2. INSPECT BLOWER RESISTOR CONTINUITY

Condition	Tester connection	Specified condition
Constant	1 – 2 – 3 – 4	Continuity

If continuity is not as specified, replace the blower resistor.

3. INSTALL BLOWER RESISTOR

(a) Install the blower resistor and 2 screws.

(b) Connect the connector.

THERMISTOR

INSPECTION

AC2H7-01

1. REMOVE BLOWER UNIT (See page AC–31)

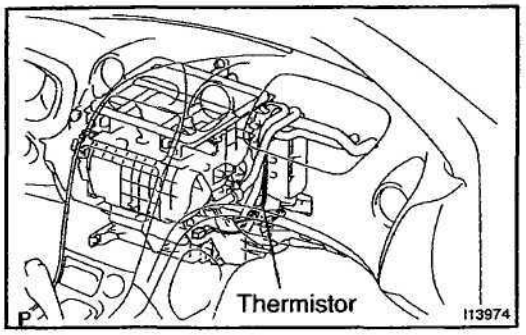

2. REMOVE THERMISTOR

(a) Disconnect the connector.

(b) Using a screwdriver, pull out the thermistor.

HINT:

Tape the screwdriver tip before use.

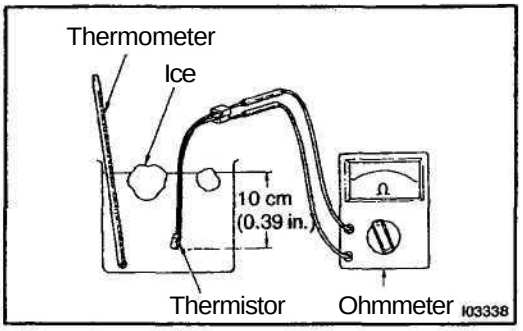

3. INSPECT THERMISTOR

(a) Place the thermistor in cold water, and while changing the temperature of water, measure resistance at the connector and at the same time, measure temperature of water with a thermometer.

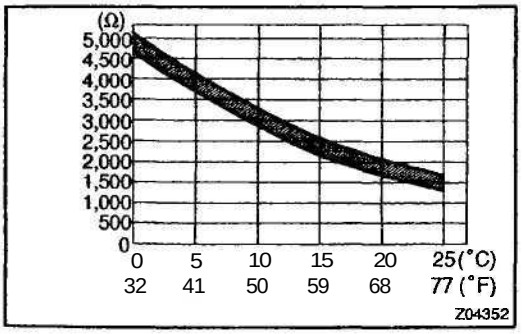

(b) Compare the 2 readings on the chart.

If resistance is not as specified, replace the thermistor.

4. INSTALL THERMISTOR

(a) Install the thermistor to A/C unit.

(b) Connect the connector.

5. INSTALL BLOWER UNIT (See page AC–34)

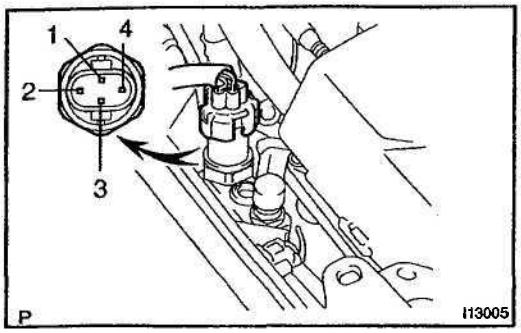

PRESSURE SWITCH

AC1GU-02

ON–VEHICLE INSPECTION

1. SET ON MANIFOLD GAUGE SET
(See page AC–19)
2. DISCONNECT CONNECTOR FROM PRESSURE SWITCH
3. RUN ENGINE AT APPROX. 1,500 RPM

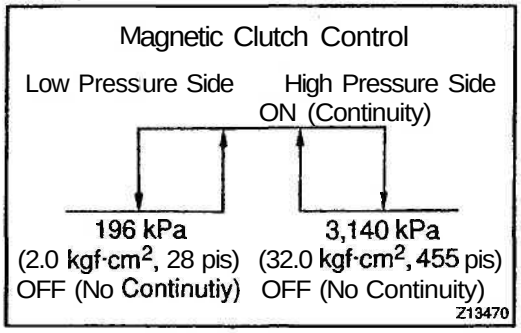

4. **Magnetic clutch control:**
INSPECT PRESSURE SWITCH OPERATION:

(a) Connect the positive (+) lead from the ohmmeter to terminal 4 and the negative (-) lead to terminal 1.

(b) Check continuity between terminals when refrigerant pressure is charged, as shown in the illustration.

If operation is not as specified, replace the pressure switch.

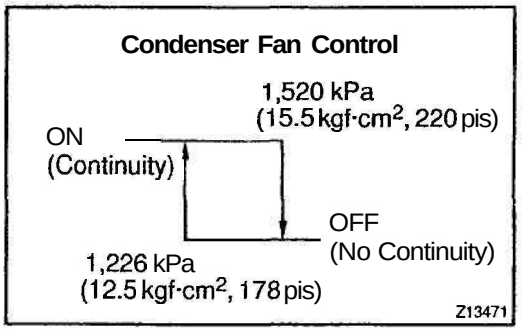

5. **Condenser fan control:**
INSPECT PRESSURE SWITCH OPERATION

(a) Connect the positive (-) lead from the ohmmeter to terminal 2 and the negative (–) lead to terminal 3.

(b) Check continuity between terminals when refrigerant pressure is changed, as shown in the illustration.

If operation is not as specified, replace the pressure switch.

6. STOP ENGINE AND SET OFF MANIFOLD GAUGE SET
7. CONNECT CONNECTOR TO PRESSURE SWITCH

AC1GV-02

REMOVAL

1. DISCHARGE REFRIGERANT FROM REFRIGERANT SYSTEM

HINT:

At the time of installation, please refer to the following item.

Evacuate air from refrigeration system.

Charge system with refrigerant and inspect for leakage of refrigerant.

Specified amount: 430 ± 30 g (15.17 ± 1.06 oz.)

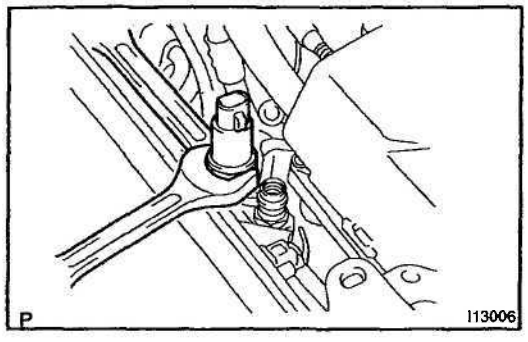

2. REMOVE PRESSURE SWITCH

(a) Disconnect the connector.

(b) Remove the pressure switch from the liquid tube.

Torque: 10 N·m (100 kgf·cm, 7 ft·lbf)

HINT:

- Lock the switch mount on the tube with an open end wrench, being careful not to deform the tube, and remove the switch.
- At the time of installation, please refer to the following item.

  Lubricate a new O-ring with compressor oil and install them to the switch.

INSTALLATION

Installation is in the reverse order of removal (See page AC-52).

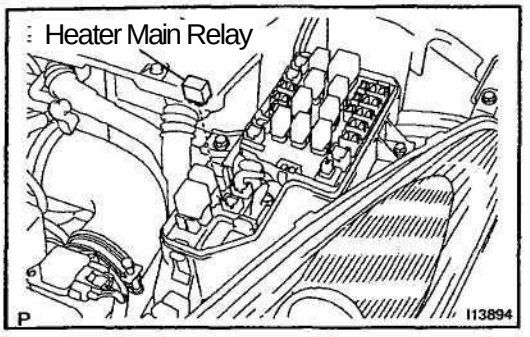

HEATER MAIN RELAY INSPECTION

AC1GX-02

1. REMOVE HEATER MAIN RELAY FROM ENGINE ROOM RELAY BLOCK NO. 1

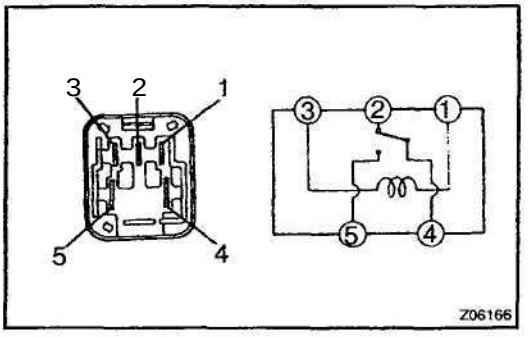

2. INSPECT HEATER MAIN RELAY CONTINUITY

Condition	Tester connection	Specified condition
Constant	1 - 3 2 - 4	Continuity
Apply B+ between terminals 1 and 3.	4 - 5	Continuity

If continuity is not as specified, replace the relay.

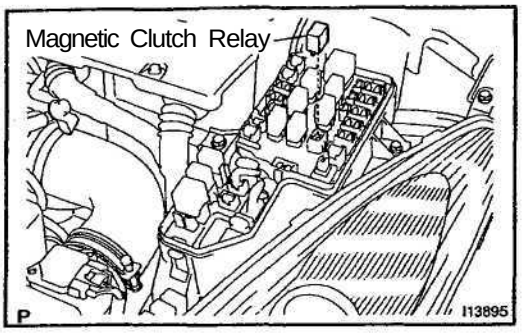

MAGNETIC CLUTCH RELAY

AC1GY-02

INSPECTION

1. REMOVE MAGNETIC CLUTCH RELAY FROM ENGINE ROOM *JIB*

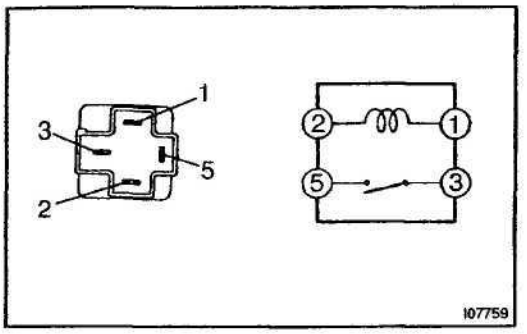

2. INSPECT MAGNETIC CLUTCH RELAY CONTINUITY

Condition	Tester connection	Specified condition
Constant	1-2	Continuity
Apply B+ between terminals 1 and 2.	3-5	Continuity

If continuity is not as specified, replace the relay.

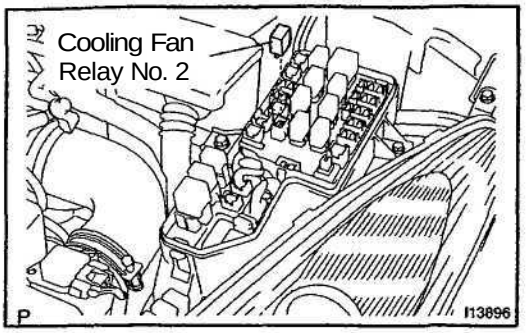

COOLING FAN RELAY INSPECTION

AC2H8-01

1. REMOVE COOLING FAN RELAY NO. 2 FROM ENGINE ROOM J/B

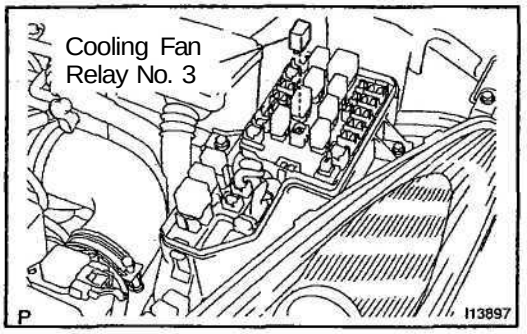

2. REMOVE COOLING FAN RELAY NO. 3 FROM ENGINE ROOM J/B

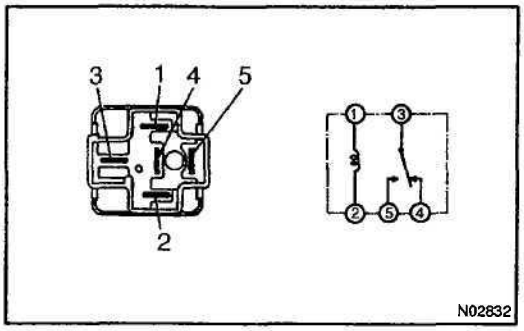

3. INSPECT COOLING FAN RELAY NO.2 CONTINUITY

Condition	Tester connection	Specified condition
Constant	1-2 4-5	Continuity
Apply B+ between terminals 1 and 2.	3-5	Continuity

If continuity is not as specified, replace the relay.

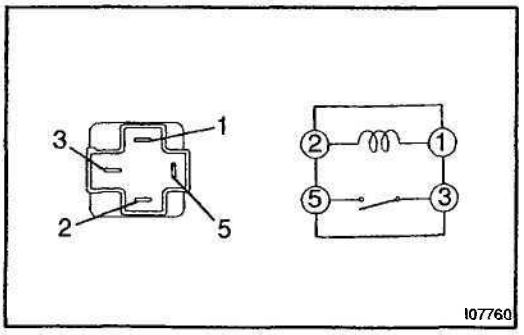

4. INSPECT COOLING FAN RELAY NO.3 CONTINUITY

Condition	Tester connection	Specified condition
Constant	1-2	Continuity
Apply B+ between terminals 1 and 2.	3-5	Continuity

If continuity is not as specified, replace the relay.

CONDENSER FAN

ON–VEHICLE INSPECTION

AC1H0-02

1. INSPECT CONDENSER FAN OPERATION

Inspect the fan operation at these condiyions, as shown in the chart.

Test conditions:

- Start engine
- Blower speed control switch position "HI"
- Temperature control dial at "COOL" position
- Set on manifold gauge set
- A/C switch ON

Condition	Fan operation (Fan speed)
Engine coolant temperature 88 °C (190 °F) or below	Rotate (Low speed)
Engine coolant temperature 98 °C (208 °F) or above	Rotate (High speed)
Refrigerant pressure is less than 1,520 kPa (15.5 kgf/cm², 220 psi)	Rotate (Low speed)
Refrigerant pressure is 1,520 kPa (15.5 kgf/cm², 220 psi) or above	Rotate (High speed)

If operation is not as specified, proceed to the next inspection.

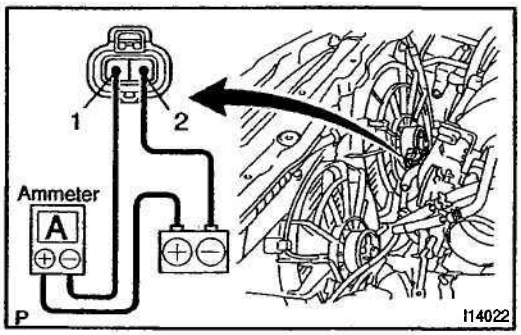

2. INSPECT CONDENSER FAN MOTOR OPERATION

(a) Disconnect the connector.

(b) Connect battery and ammeter.

(c) Check that the fan rotates smoothly, and then check the reading on the ammeter.

Specified amperage: 9.2 – 11.0 A at 20 °C (68 °F)

- If operation is not as specified, replace the fan motor.
- If operation is as specified, check the pressure switch, cooling fan relays and engine coolant temp. switch.

AC2H9-01

COMPONENTS

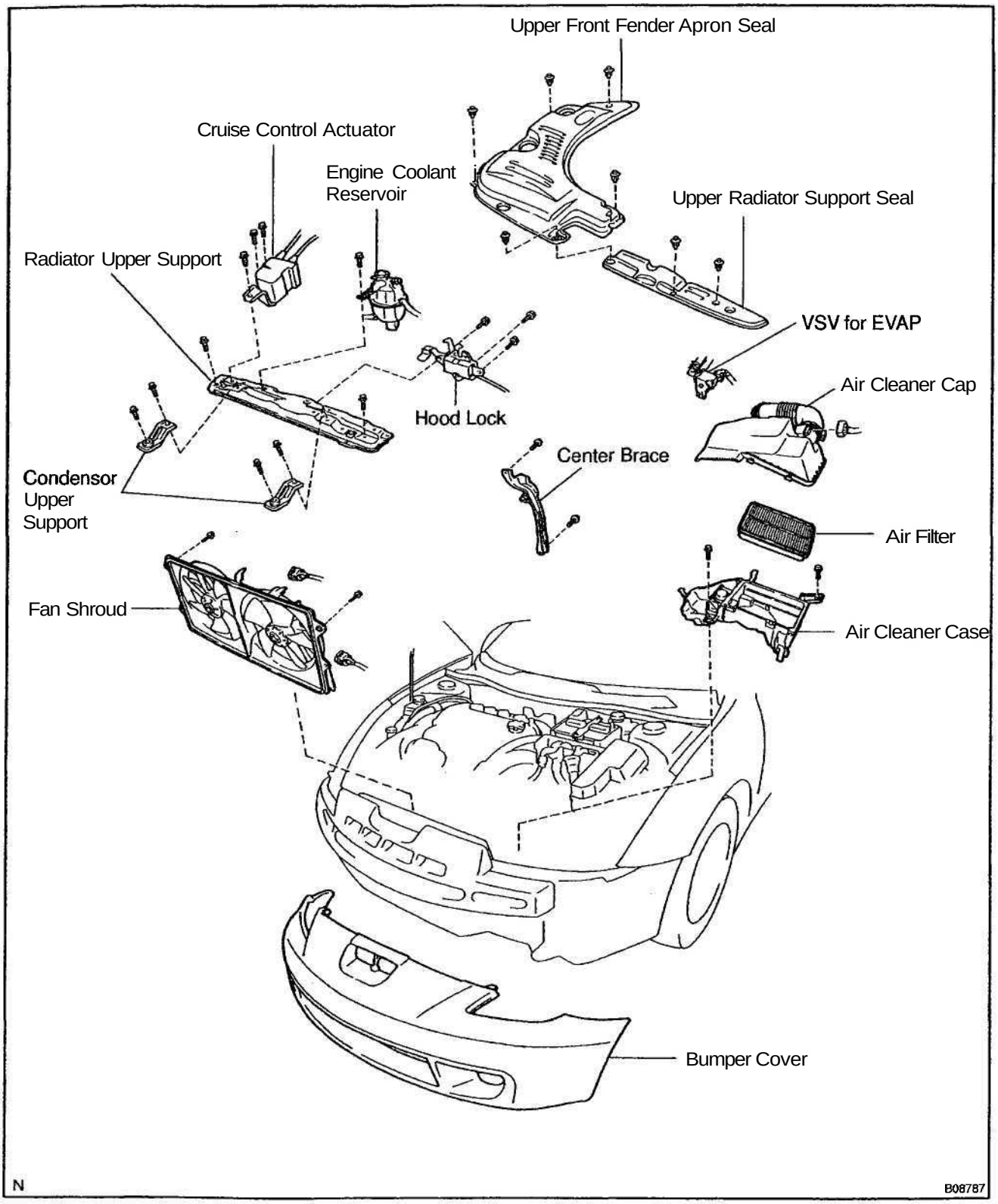

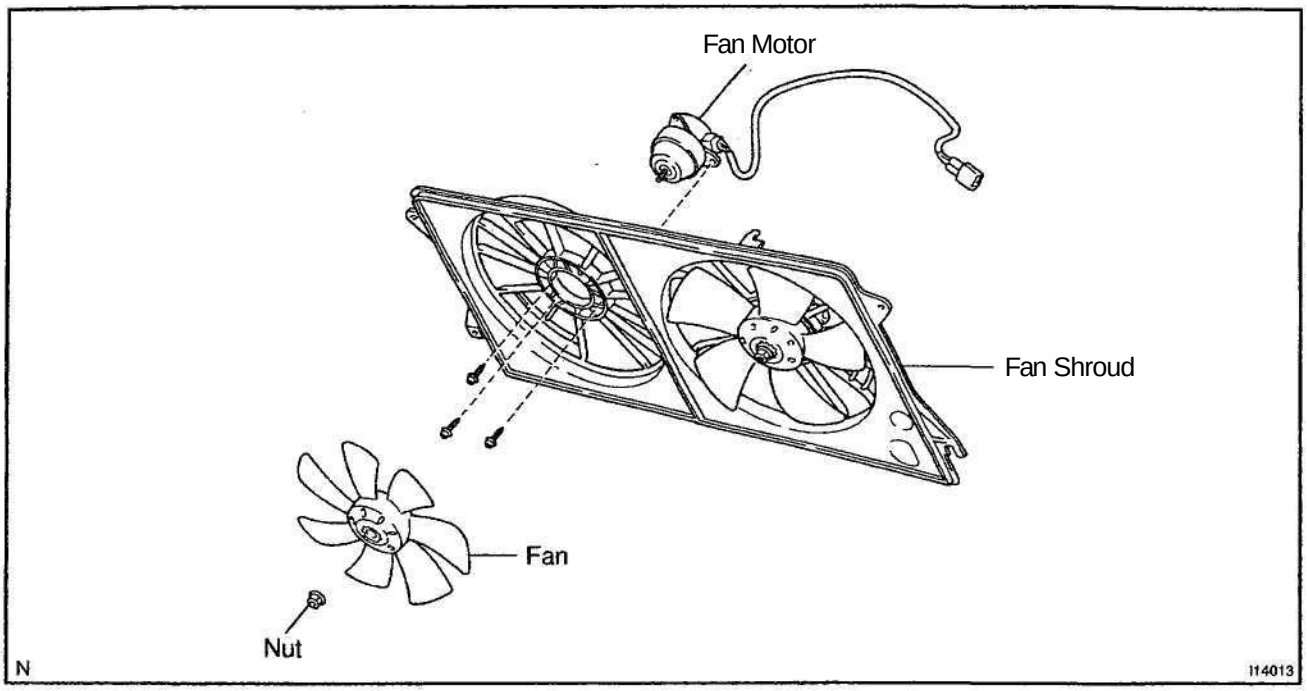
Fan Motor
Fan Shroud
Fan
Nut
N
114013

AIR CONDITIONING AMPLIFIER

AC2HA-01

ON–VEHICLE INSPECTION

1. **REMOVE COMBINATION MATER**
   (See page BE–44)
2. **REMOVE ECM**
3. **INSPECT A/C AMPLIFIER CIRCUIT**

(a) Disconnect the connector from the combination mater and inspect the connector on the wire harness side, as shown in the chart below.
Test condition:
Turn ignition switch to ON

Wire harness side:

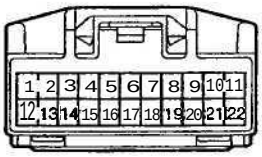

Connector "A"

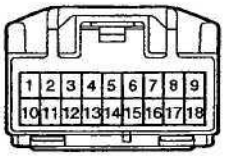

Connector "B"

I14994

Tester connection	Condition	Specified condition
A7 – Ground	Constant	Continuity
A6-A18	Evaporator temperature at 25 °C (77 °F)	1.5 kΩ

If circuit is as specified, try replacing the amplifier with a new one. If the circuit is not as specified, inspect the circuits connected to other parts.

(b) Connect the connector to combination mater and inspect wire harness side from the back side, as shown in the chart below.
Test condition:
- Run engine at idle speed
- Set on manifold gauge set

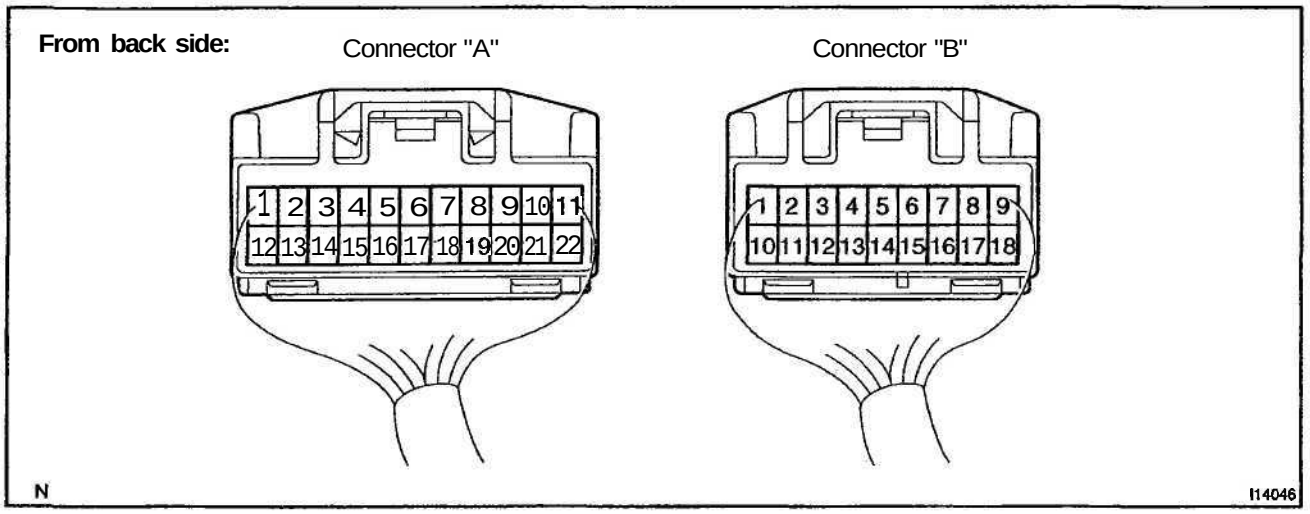

Tester connection	Condition	Specified condition
B10 – Ground	A/C switch ON & Blower motor: operate	Below 1.0 V
	A/C switch OFF	Battery positive voltage
B14 – Ground	Mode selector: OEF.	Below 1.0 V
	Mode Selector: Except DEF.	Battery positive voltage
B15 – Ground	A/C switch ON	Below 1.0V
	A/C switch OFF	Battery positive voltage
A13 – Ground	Blower motor: Operate	Below 2.0 V
	Blower motor: No operate	Battery positive voltage

If circuit is as specified, try replacing the amplifier with a new one. If the circuit is not as specified, inspect the circuits connected to other parts.

(c) Inspect the wire harness side connector of ECM from the back side, as shown in the chart below.

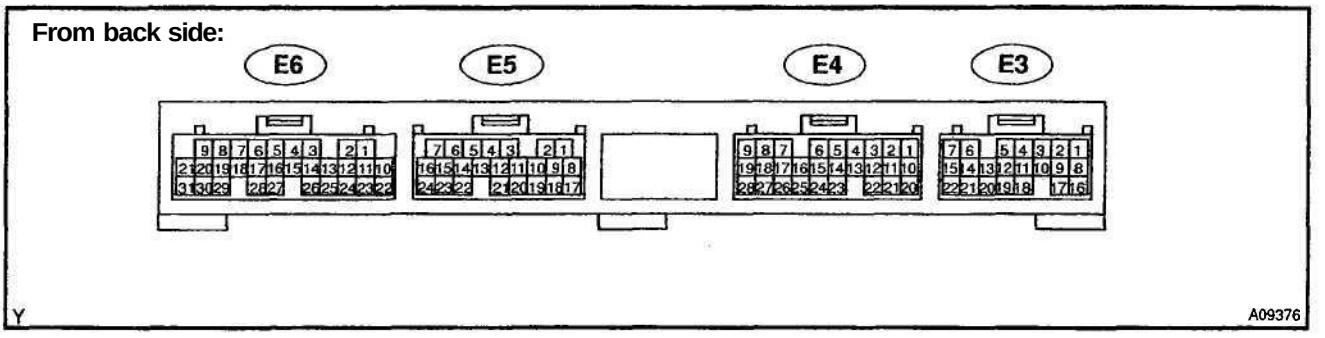

Tester connection	Condition	Specified condition
E3–12 ↔ Ground	Start engine. Magnetic clutch: ON	Below 1.0 V
	Start engine. Magnetic clutch: OFF	Battery positive voltage
E4–28 ↔ Ground	Start engine. A/C switch ON	Battery positive voltage
	Start engine. A/C switch OFF	No voltage
E4–18 ↔ Ground	Refrigerant pressure: 196 – 1,340 kPa	Battery positive voltage
	Refrigerant pressure: less than 196 or more than 1,340 kPa	No voltage

If circuit is as specified, try replacing the amplifier with a new one. If the circuit is not as specified, inspect the circuits connected to other parts.

REMOVAL

1. REMOVE COMBINATION METER (See page BE–44)
2. REMOVE ECM

INSTALLATION

Installation is in the reverse order of removal (See page AC–63).

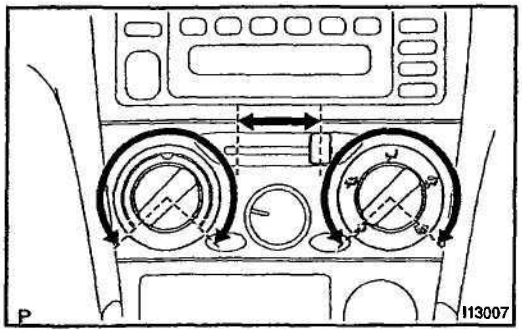

HEATER CONTROL ASSEMBLY

ON–VEHICLE INSPECTION

AC2HD-01

INSPECT HEATER CONTROL DIALS OPERATION

Turn the control lever and 2 control dials left and right then check that click sound can be heard and recoil is felt.

if click sound can not be heard or recoil is felt, adjust the control cable or check control cable and heater control assembly.

AC2HE-01

COMPONENTS

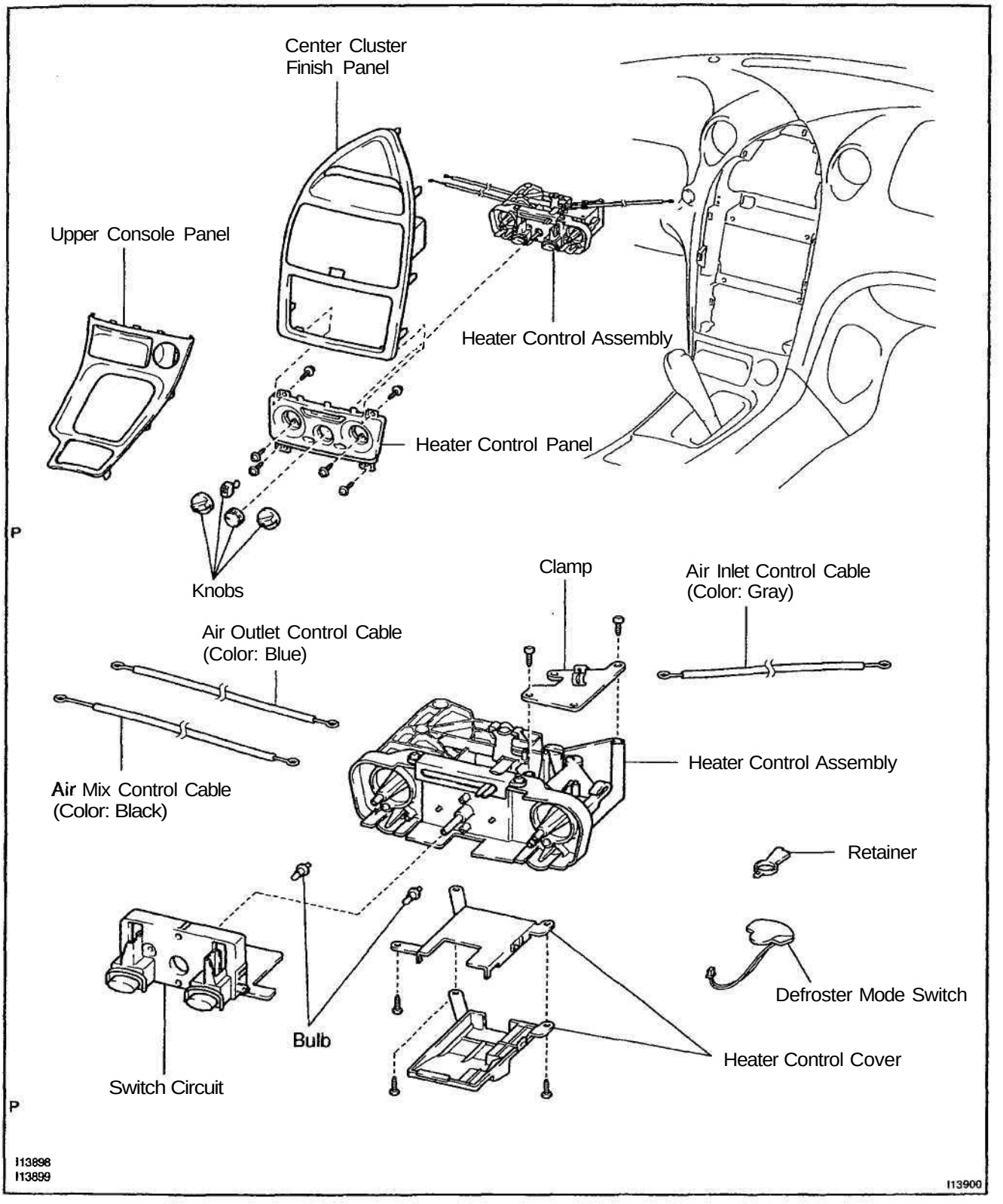

AC2HF-01

REMOVAL

1. **REMOVE CENTER CLUSTER FINISH PANEL (See page BO–79)**
2. **DISCONNECT HEATER CONTROL CABLES**

NOTICE:

When the air mix damper control cables is disconnected, should not bend the cable.

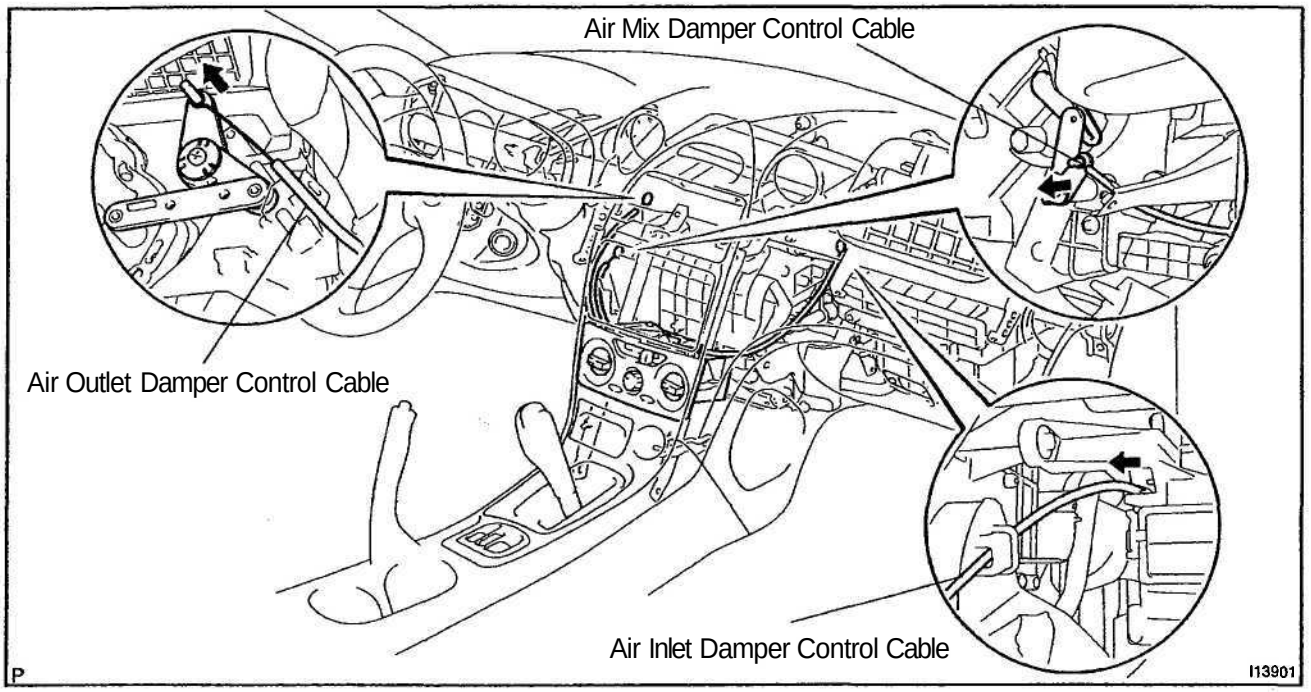

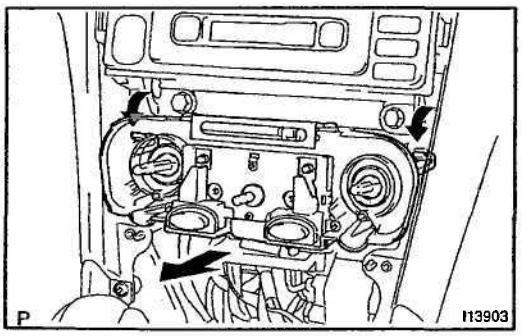

3. **REMOVE HEATER CONTROL ASSEMBLY**

Release the 2 claws and pull out the A/C control assembly, then disconnect the connector.

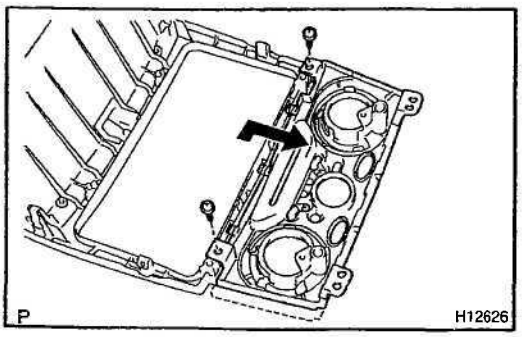

4. **REMOVE HEATER CONTROL PANEL**

(a) Remove the 2 screws.

(b) Slide and remove the A/C control assembly.

AC2NS-01

INSPECTION

1. INSPECT ILLUMINATION OPERATION

Connect the positive (+) lead from the battery to terminal 7 and negative (-) lead to terminal 4 then check that the illuminations lights up.

If operation is not as specified, check the faulty bulb.

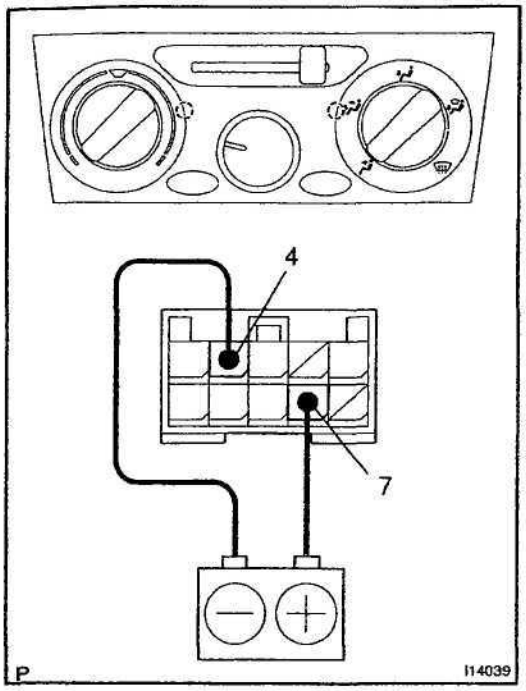

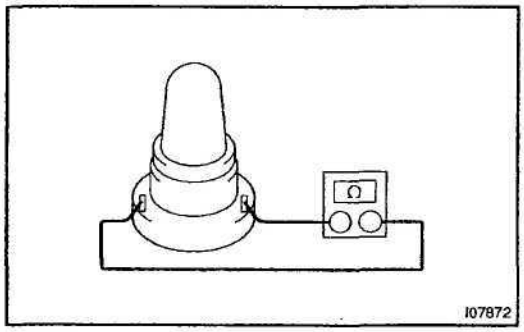

2. INSPECT BULB

Apply the tester as shown in the illustration to the test for continuity.

If continuity exists, replace the heater control.

If no continuity exists, replace the bulb.

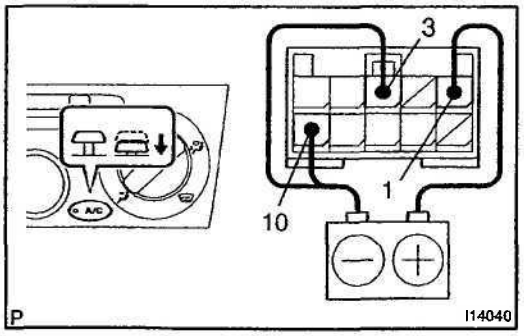

3. INSPECT A/C INDICATOR OPERATION

(a) Connect the positive (+) lead from the battery to terminal 1 and the negative (-) lead to terminal 3 and 10.

(b) Push the A/C button in and then check that the indicator lights up.

If operation is not as specified, replace the switch.

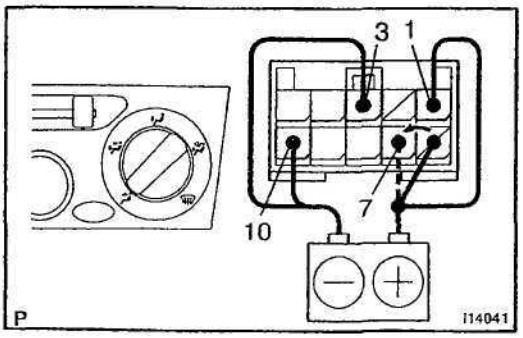

4. INSPECT DIMMING OPERATION

(a) Connect the positive (+) lead from the battery to terminal 1 and the negative (-) lead to terminal 3 and 10 while press the switch.

(b) Connect the positive (+) lead from battery to terminal 7 and then check that the indicator dims.

If operation is not as specified, replace the switch.

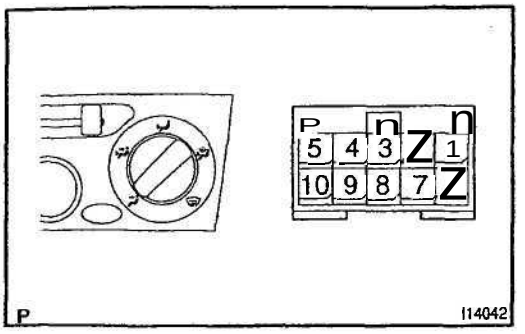

5. INSPECT A/C SWITCH CONTINUITY

Condition/ Circuit	Tester connection	Specified condition
OFF	–	No continuity
ON	9-3	Continuity

Switch continuity:
If continuity is not as specified, replace the switch.
Illumination circuit:
If continuity is not as specified, replace the bulb.

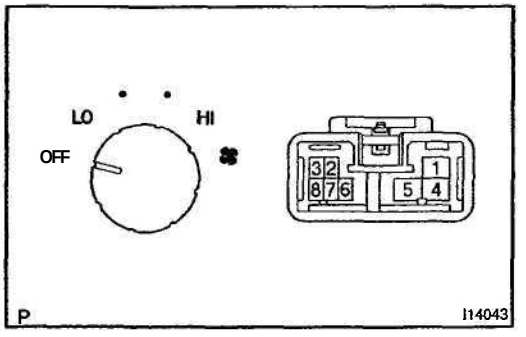

6. INSPECT BLOWER SPEED CONTROL SWITCH CONTINUITY

Position/ Circuit	Tester connection	Specified condition
OFF	–	No continuity
LO	1-8	Continuity
M1	1-6-8	Continuity
M2	1-5-8	Continuity
HI	1-4-8	Continuity

If continuity is not as specified, replace the switch.

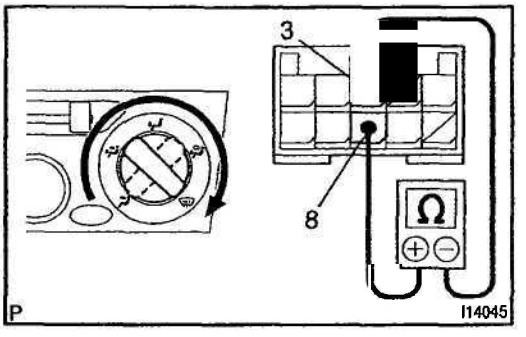

7. INSPECT DEFROSTER MODE SWITCH OPERATION

Position/ Circuit	Tester connection	Specified condition
OFF	–	No continuity
ON	3-8	Continuity

If no continuity exists, replace the switch.

8. INSPECT REAR DEFOGGER SWITCH OPERATION

(See page BE–55)

AC2HG-01

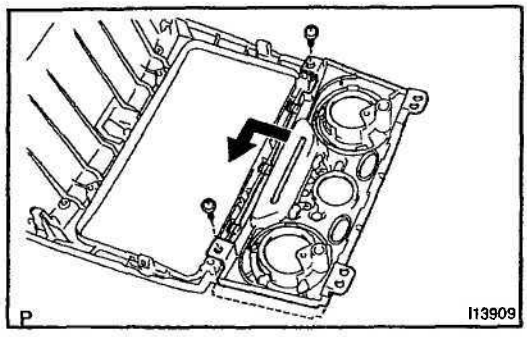

INSTALLATION

1. INSTALL A/C CONTROL PANEL

Install the A/C control panel and 2 screws.

2. INSTALL A/C CONTROL ASSEMBLY

(a) Install the A/C control assembly temporarily.

(b) Pass through the A/C control cables as shown in the illustration.

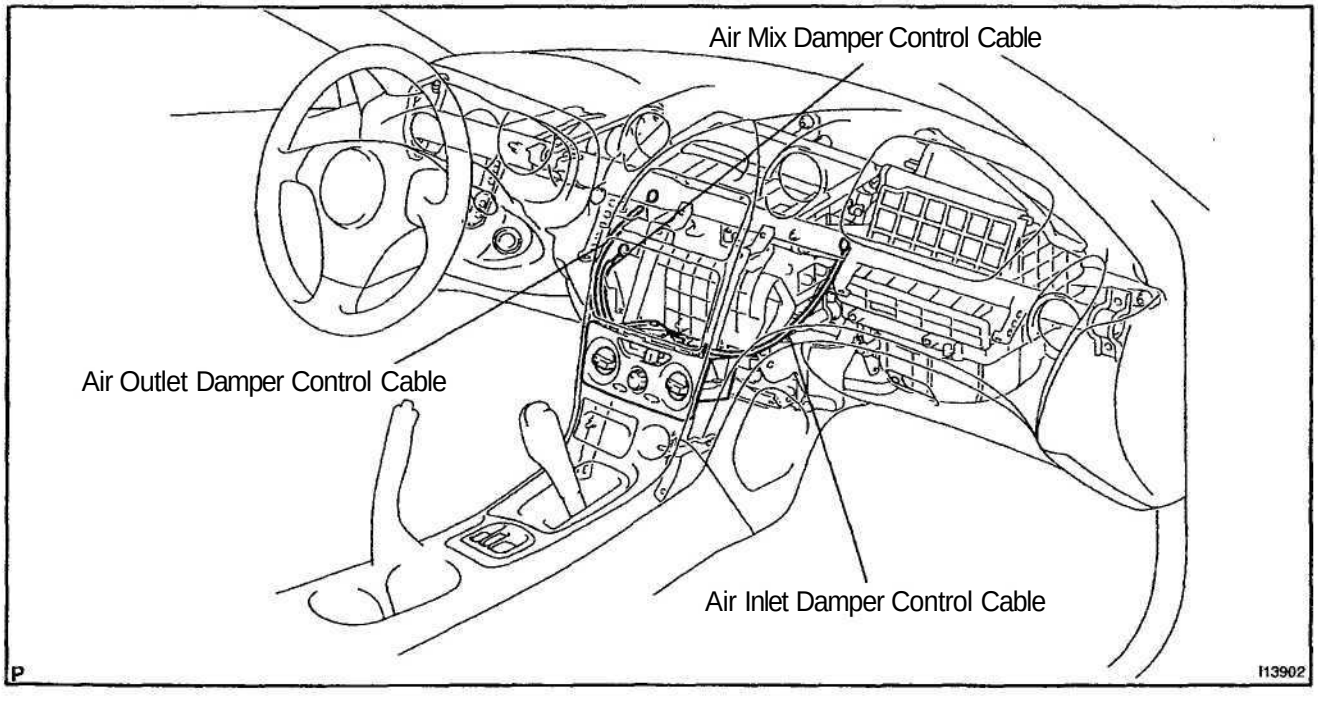

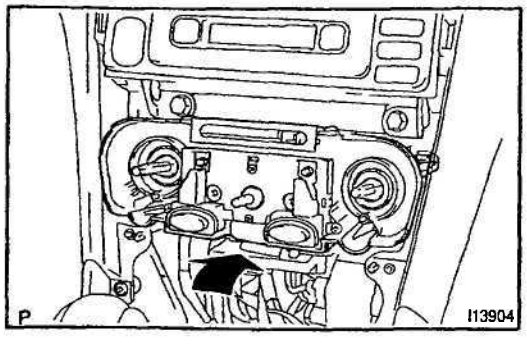

(c) Fit the 2 claws of heater control assembly in the instrument panel hole.

3. CONNECT A/C CONTROL CABLES

(a) Set air inlet control lever to "RECIRC" position.
(b) Set temperature control dial to "MAX. COOL" position.
(c) Set mode control dial to "DEF" position.

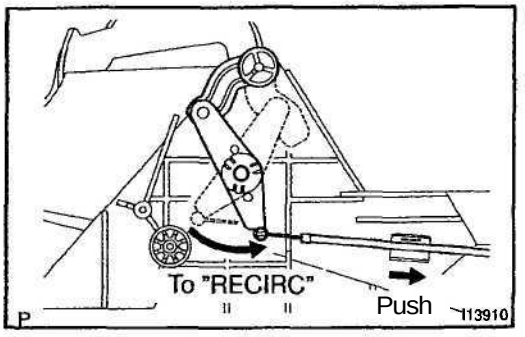

(d) Adjust air inlet damper control cable.
Set air inlet damper control lever to "RECIRC" position and connect the inner cable to lever pin and clamp the outer cable.

HINT:
Lock the clamp while lightly pushing the outer cable to the direction shown by arrow in the illustration.

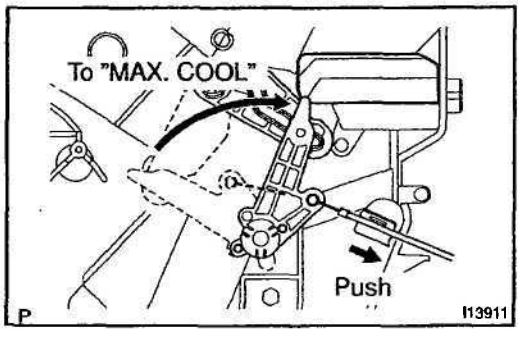

(e) Adjust air mix damper control cable.
Set air mix damper control lever to "MAX. COOL" position and connect the inner cable to lever pin and clamp the outer cable.

HINT:
Lock the clamp while lightly pushing the outer cable to the direction shown by arrow in the illustration.

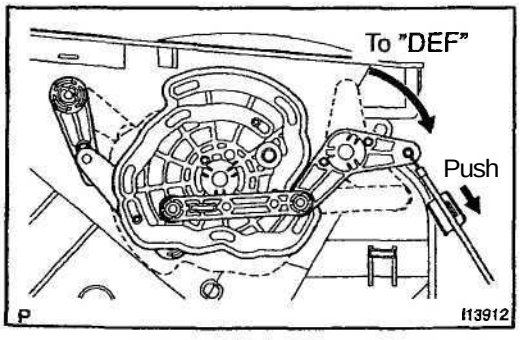

(f) Adjust air outlet damper control cable.
Pull the air outlet damper control link to "DEF" position, connect the control cable and lock the clamp.

HINT:
Lock the clamp while lightly pushing the outer cable to the direction shown by arrow in the illustration.

ENGINE COOLANT TEMPERATURE (ECT) SWITCH INSPECTION

AC1HE-02

1. DRAIN ENGINE COOLANT FROM RADIATOR

HINT:

It is not necessary to drain out all the coolant.

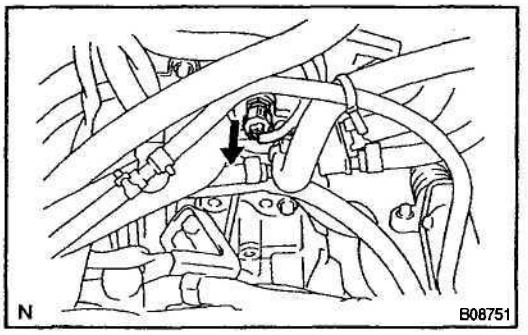

2. REMOVE ECT SWITCH

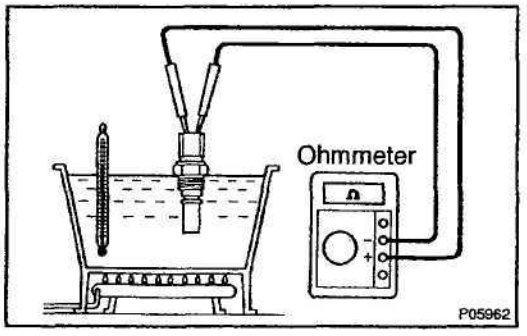

3. INSPECT SWITCH CONTINUITY

(a) Using an ohmmeter, check that no continuity exists between the terminals when the coolant temperature is above 90 °C (194 °F).

(b) Using an ohmmeter, check that continuity exists between the terminals when the coolant temperature is below 83 °C (181 °F).

If no continuity exists, replace the switch.

4. INSTALL ECT SWITCH

5. RERLL ENGINE COOLANT

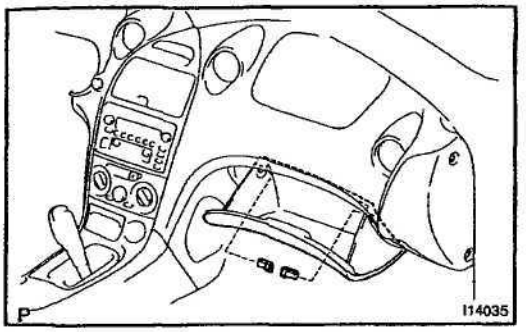

AIR REFINER FILTER

AC2HH-01

REPLACEMENT

1. REMOVE AIR REFINER FILTER

(a) Remove the 2 pins in the glove box and open the glove box widely by pulling it down.

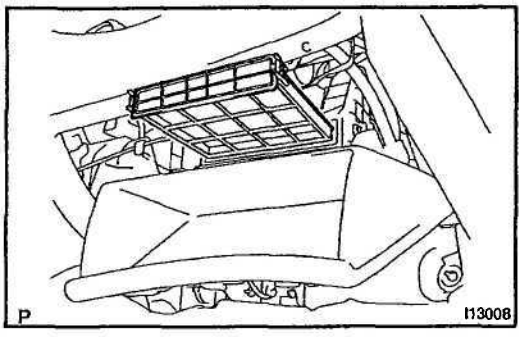

(b) Pull out the filter case.

(c) Remove the air refiner filter from the filter case.

2. INSTALL AIR REFINER FILTER

(a) Install the air refiner filter to filter case.

(b) Install the filter case.

(c) Close the glove box and install the 2 pins to it.

– MEMO –

ALPHABETICAL INDEX

A

	Page	Vol.
ABBREVIATIONS USED IN THIS MANUAL (TERMS)	IN–35	(1)
ABS ACTUATOR	BR–48	(2)
AIR CONDITIONING (PREPARATION)	PP–85	(1)
AIR CONDITIONING (SERVICE SPECIFICATIONS)	SS–57	(1)
AIR CONDITIONING AMPLIFIER	AC–60	(2)
AIR CONDITIONING SYSTEM	AC–1	(2)
AIR CONDITIONING UNIT	AC–24	(2)
AIR REFINER FILTER	AC–73	(2)
AIRBAG SENSOR ASSEMBLY	RS–52	(2)
ANTENNA	BE–119	(2)
ANTI–LOCK BRAKE SYSTEM WITH ELECTRONIC BRAKE FORCE DISTRIBUTION (EBD) (DIAGNOSTICS)	DI–274	(1)
ATF TEMPERATURE SENSOR (U240E)	AX–6	(2)
ATF TEMPERATURE SENSOR (U341E)	AX–5	(2)
AUDIO SYSTEM	BE–88	(2)
AUTOMATIC TRANSAXLE (U240E) (DIAGNOSTICS)	DI–155	(1)
AUTOMATIC TRANSAXLE (U240E) (PREPARATION)	PP–46	(1)
AUTOMATIC TRANSAXLE (U240E) (SERVICE SPECIFICATIONS)	SS–41	(1)
AUTOMATIC TRANSAXLE (U341 E) (DIAGNOSTICS)	DI–218	(1)
AUTOMATIC TRANSAXLE (U341E) (PREPARATION)	PP–51	(1)
AUTOMATIC TRANSAXLE (U341 E) (SERVICE SPECIFICATIONS)	SS–43	(1)
AUTOMATIC TRANSAXLE SYSTEM (U240E)	AX–1	(2)
AUTOMATIC TRANSAXLE SYSTEM (U341 E)	AX–1	(2)
AUTOMATIC TRANSAXLE UNIT (U240E)	AX–30	(2)
AUTOMATIC TRANSAXLE UNIT (U341 E)	AX–30	(2)

B

	Page	Vol.
BACK DOOR	BO–22	(2)
BACK DOOR GLASS	BO–64	(2)
BACK DOOR STAY	BO–27	(2)
BACK–UP LIGHT SYSTEM	BE–30	(2)
BLOWER MOTOR	AC–48	(2)
BLOWER RESISTOR	AC–49	(2)
BLOWER UNIT	AC–30	(2)
BODY (PREPARATION)	PP–80	(1)
BODY (SERVICE SPECIFICATIONS)	SS–55	(1)
BODY CONTROL SYSTEM (DIAGNOSTICS)	DI–535	(1)
BODY ELECTRICAL (PREPARATION)	PP–77	(1)
BODY ELECTRICAL (SERVICE SPECIFICATIONS)	SS–54	(1)
BODY ELECTRICAL SYSTEM	BE–1	(2)
BRAKE	MA–6	(1)
BRAKE (PREPARATION)	PP–62	(1)
BRAKE (SERVICE SPECIFICATIONS)	SS–49	(1)
BRAKE BOOSTER ASSEMBLY	BR–13	(2)
BRAKE FLUID	BR–4	(2)
BRAKE MASTER CYLINDER	BR-9	(2)
BRAKE PEDAL	BR–6	(2)
BRAKE SYSTEM	BR–1	(2)

ID

C

	Page	Vol.
CAMSHAFT POSITION SENSOR	IG–8	(2)
CAMSHAFT TIMING OIL CONTROL VALVE	SF–46	(2)
CHARGING (PREPARATION)	PP-24	(1)
CHARGING (SERVICE SPECIFICATIONS)	SS–27	(1)
CHARGING SYSTEM	CH–1	(2)
CHASSIS	MA-7	(1)
CIRCUIT INSPECTION (ANTI–LOCK BRAKE SYSTEM WITH ELECTRONIC BRAKE FORCE DISTRIBUTION (EBD)) (DIAGNOSTICS)	DI–285	(1)
CIRCUIT INSPECTION (AUTOMATIC TRANSAXLE (U240E)) (DIAGNOSTICS)	DI–175	(1)
CIRCUIT INSPECTION (AUTOMATIC TRANSAXLE (U341E)) (DIAGNOSTICS)	DI–238	(1)
CIRCUIT INSPECTION (BODY CONTROL SYSTEM) (DIAGNOSTICS)	DI–544	(1)
CIRCUIT INSPECTION (CRUISE CONTROL SYSTEM) (DIAGNOSTICS)	DI–496	(1)
CIRCUIT INSPECTION (ENGINE) (DIAGNOSTICS)	DI–23	(1)
CIRCUIT INSPECTION (SUPPLEMENTAL RESTRAINT SYSTEM) (DIAGNOSTICS)	DI–339	(1)
CIRCUIT OPENING RELAY	SF–53	(2)
CLIP	BO–1	(2)
CLOCK	BE–122	(2)
CLUTCH (PREPARATION)	PP–27	(1)
CLUTCH (SERVICE SPECIFICATIONS)	SS–29	(1)
CLUTCH MASTER CYLINDER	CL–4	(2)
CLUTCH PEDAL	CL-2	(2)
CLUTCH RELEASE CYLINDER	CL-9	(2)
CLUTCH UNIT	CL–14	(2)
CO/HC	EM–1	(2)
COMBINATION METER	BE–39	(2)
COMPRESSION	EM–3	(2)
COMPRESSOR AND MAGNETIC CLUTCH	AC–35	(2)
CONDENSER	AC–43	(2)
CONDENSER FAN	AC–57	(2)
COOLANT	CO–1	(2)
COOLING (PREPARATION)	PP–11	(1)
COOLING (SERVICE SPECIFICATIONS)	SS–19	(1)
COOLING FAN RELAY	AC–56	(2)
COOLING FAN RELAY	CO–31	(2)
CRANKSHAFT POSITION SENSOR	IG–11	(2)
CRUISE CONTROL SYSTEM (DIAGNOSTICS)	DM83	(1)
CUSTOMER PROBLEM ANALYSIS CHECK (ANTI-LOCK BRAKE SYSTEM WITH ELECTRONIC BRAKE FORCE DISTRIBUTION (EBD)) (DIAGNOSTICS)	DI–275	(1)
CUSTOMER PROBLEM ANALYSIS CHECK (AUTOMATIC TRANSAXLE (U240E)) (DIAGNOSTICS)	DM56	(1)
CUSTOMER PROBLEM ANALYSIS CHECK (AUTOMATIC TRANSAXLE (U341 E)) (DIAGNOSTICS)	DI–219	(1)
CUSTOMER PROBLEM ANALYSIS CHECK (BODY CONTROL SYSTEM) (DIAGNOSTICS)	DI–536	(1)
CUSTOMER PROBLEM ANALYSIS CHECK (CRUISE CONTROL SYSTEM) (DIAGNOSTICS)	DI–484	(1)
CUSTOMER PROBLEM ANALYSIS CHECK (ENGINE) (DIAGNOSTICS)	DI–2	(1)
CUSTOMER PROBLEM ANALYSIS CHECK (SUPPLEMENTAL RESTRAINT SYSTEM) (DIAGNOSTICS)	DI–325	(1)
CYLINDER BLOCK	EM–85	(2)
CYLINDER HEAD	EM–36	(2)

D

	Page Vol.
DEFOGGER SYSTEM	BE–54 (2)
DIAGNOSTIC TROUBLE CODE CHART (ANTI–LOCK BRAKE SYSTEM WITH ELECTRONIC BRAKE FORCE DISTRIBUTION (EBD)) (DIAGNOSTICS)	DI–280 (1)
DIAGNOSTIC TROUBLE CODE CHART (AUTOMATIC TRANSAXLE (U240E)) (DIAGNOSTICS)	DI–168 (1)
DIAGNOSTIC TROUBLE CODE CHART (AUTOMATIC TRANSAXLE (U341E)) (DIAGNOSTICS)	DI–231 (1)
DIAGNOSTIC TROUBLE CODE CHART (CRUISE CONTROL SYSTEM) (DIAGNOSTICS)	DI–490 (1)
DIAGNOSTIC TROUBLE CODE CHART (ENGINE) (DIAGNOSTICS)	DI–14 (1)
DIAGNOSTIC TROUBLE CODE CHART (SUPPLEMENTAL RESTRAINT SYSTEM) (DIAGNOSTICS)	DI–332 (1)
DIFFERENTIAL CASE (C56)	MX–45 (2)
DIFFERENTIAL CASE (C60)	MX–48 (2)
DIFFERENTIAL OIL SEAL (U240E)	AX–14 (2)
DIFFERENTIAL OIL SEAL (U341E)	AX–13 (2)
DIRECT CLUTCH SPEED SENSOR (U341E)	AX–4 (2)
DOOR SIDE AIRBAG SENSOR	RS–67 (2)
DRIVE BELT	AC–16 (2)
DRIVE BELT	SR–3 (2)

E

EH MAIN RELAY	SF–52 (2)
ELECTRIC COOLING FAN	CO–24 (2)
ELECTRIC TENSION REDUCER SYSTEM	BE–52 (2)
EMISSION CONTROL (PREPARATION)	PP–7 (1)
EMISSION CONTROL (SERVICE SPECIFICATIONS)	SS–16 (1)
EMISSION CONTROL SYSTEM	EC–1 (2)
ENGINE	MA–5 (1)
ENGINE (DIAGNOSTICS)	DI–1 (1)
ENGINE CONTROL MODULE (ECM)	SF–71 (2)
ENGINE COOLANT TEMPERATURE (ECT) SENSOR	SF–62 (2)
ENGINE COOLANT TEMPERATURE (ECT) SWITCH	AC–72 (2)
ENGINE MECHANICAL (PREPARATION)	PP–2 (1)
ENGINE MECHANICAL (SERVICE SPECIFICATIONS)	SS–6 (1)
ENGINE UNIT	EM–70 (2)
EVAPORATIVE EMISSION (EVAP) CONTROL SYSTEM	EC–5 (2)
EXHAUST SYSTEM	EM–115 (2)

F

FLOOR SHIFT ASSEMBLY (U240E)	AX–17 (2)
FLOOR SHIFT ASSEMBLY (U341E)	AX–16 (2)
FOG LIGHT SYSTEM	BE–22 (2)
FOR ALL OF VEHICLES	IN–10 (1)
FRONT AIRBAG SENSOR	RS–57 (2)
FRONT AXLE HUB	SA–11 (2)
FRONT BRAKE CALIPER	BR–20 (2)
FRONT BRAKE PAD	BR–17 (2)
FRONT BUMPER	BO–4 (2)
FRONT DOOR	BO–10 (2)
FRONT DRIVE SHAFT	SA–18 (2)
FRONT LOWER BALL JOINT	SA–46 (2)
FRONT LOWER SUSPENSION ARM	SA–41 (2)
FRONT PASSENGER AIRBAG ASSEMBLY	RS–26 (2)
FRONT SEAT	BO–92 (2)
FRONT SHOCK ABSORBER	SA–33 (2)
FRONT SPEED SENSOR	BR-55 (2)
FRONT STABILIZER BAR	SA–50 (2)
FRONT WHEEL ALIGNMENT	SA–4 (2)
FRONT WHEEL HUB BOLT	SA–17 (2)
FRONT WIPER AND WASHER	BO–28 (2)
FUELCUTRPM	SF-73(2)
FUEL PRESSURE REGULATOR	SF–15 (2)
FUEL PUMP	SF–6 (2)
FUEL TANK AND LINE	SF–26 (2)

G

GENERAL INFORMATION (HOW TO TROUBLESHOOT ECU CONTROLLED SYSTEMS)	IN–19 (1)
GENERAL INFORMATION (HOW TO USE THIS MANUAL)	IN–1 (1)
GENERAL INFORMATION (REPAIR INSTRUCTIONS)	IN–4 (1)
GENERATOR	CH–5 (2)
GLOSSARY OF SAE AND TOYOTA TERMS (TERMS)	IN–40 (1)

H

HEADLIGHT	BO–6 (2)
HEADLIGHT AND TAILLIGHT SYSTEM	BE–15 (2)
HEATED OXYGEN SENSOR	SF–69 (2)
HEATER CONTROL ASSEMBLY	AC–65 (2)
HEATER MAIN RELAY	AC–54 (2)
HOOD	BO–9 (2)
HORN SYSTEM	BE–125 (2)
HOW TO PROCEED WITH TROUBLESHOOTING (ANTI-LOCK BRAKE SYSTEM WITH ELECTRONIC BRAKE FORCE DISTRIBUTION (EBD)) (DIAGNOSTICS)	DI–274 (1)
HOW TO PROCEED WITH TROUBLESHOOTING (AUTOMATIC TRANSAXLE (U240E)) (DIAGNOSTICS)	DI–155 (1)
HOW TO PROCEED WITH TROUBLESHOOTING (AUTOMATIC TRANSAXLE (U341E)) (DIAGNOSTICS)	DI–218 (1)
HOW TO PROCEED WITH TROUBLESHOOTING (BODY CONTROL SYSTEM) (DIAGNOSTICS)	DI–535 (1)
HOW TO PROCEED WITH TROUBLESHOOTING (CRUISE CONTROL SYSTEM) (DIAGNOSTICS)	DI–483 (1)
HOW TO PROCEED WITH TROUBLESHOOTING (ENGINE) (DIAGNOSTICS)	DM (1)
HOW TO PROCEED WITH TROUBLESHOOTING (HOW TO TROUBLESHOOT ECU CONTROLLED SYSTEMS)	IN–20 (1)
HOW TO PROCEED WITH TROUBLESHOOTING (SUPPLEMENTAL RESTRAINT SYSTEM) (DIAGNOSTICS)	DI–324 (1)
HOW TO TROUBLESHOOT ECU CONTROLLED SYSTEMS	IN–19 (1)
HOW TO USE THE DIAGNOSTIC CHART AND INSPECTION PROCEDURE (HOW TO TROUBLESHOOT ECU CONTROLLED SYSTEMS)	IN–30 (1)
HOW TO USE THIS MANUAL	IN–1 (1)

I

	Page	Vol.
IDENTIFICATION INFORMATION	IN–3	(1)
IDLE AIR CONTROL (IAC) VALVE	SF–40	(2)
IDLE SPEED	EM–14	(2)
IGNITION (PREPARATION)	PP–19	(1)
IGNITION (SERVICE SPECIFICATIONS)	SS–23	(1)
IGNITION COIL	IG–5	(2)
IGNITION SWITCH AND KEY UNLOCK WARNING SWITCH	BE–13	(2)
IGNITION SYSTEM	IG–1	(2)
IGNITION TIMING	EM–13	(2)
INJECTOR	SF–18	(2)
INPUT SHAFT (C56)	MX-26	(2)
INPUT SHAFT (C60)	MX–29	(2)
INSIDE VEHICLE	MA–2	(1)
INSTRUMENT PANEL	BO–76	(2)
INTERIOR LIGHT SYSTEM	BE-27	(2)

K

KNOCK SENSOR	SF–66	(2)

L

LUBRICATION (PREPARATION)	PP–15	(1)
LUBRICATION (SERVICE SPECIFICATIONS)	SS–21	(1)

M

MAGNETIC CLUTCH RELAY	AC–55	(2)
MAINTENANCE (PREPARATION)	PP-1	(1)
MAINTENANCE (SERVICE SPECIFICATIONS)	SS–4	(1)
MANIFOLD GAUGE SET	AC–19	(2)
MANUAL TRANSAXLE (C56) (PREPARATION)	PP–31	(1)
MANUAL TRANSAXLE (C56) (SERVICE SPECIFICATIONS)	SS–31	(1)
MANUAL TRANSAXLE (C60) (PREPARATION)	PP–38	(1)
MANUAL TRANSAXLE (C60) (SERVICE SPECIFICATIONS)	SS–36	(1)
MANUAL TRANSAXLE ASSEMBLY (C56)	MX–9	(2)
MANUAL TRANSAXLE ASSEMBLY (C60)	MX–9	(2)
MANUAL TRANSAXLE UNIT (C56)	MX-2	(2)
MANUAL TRANSAXLE UNIT (C60)	MX–2	(2)
MASS AIR FLOW (MAF) METER	SF–29	(2)

O

OIL AND FILTER	LU–1	(2)
OIL NOZZLE (2ZZ–GE)	LU–14	(2)
OIL PUMP	LU–5	(2)
OUTPUT SHAFT (C56)	MX–34	(2)
OUTPUT SHAFT (C60)	MX–37	(2)
OUTSIDE VEHICLE	MA–1	(1)

P

PARK/NEUTRAL POSITION (PNP) SWITCH (U240E)	AX–8	(2)
PARK/NEUTRAL POSITION (PNP) SWITCH (U341E)	AX–7	(2)
PARKING BRAKE	BR–42	(2)
PARKING BRAKE LEVER	BR–8	(2)
PARTS LAYOUT AND SCHEMATIC DRAWING	EC–2	(2)
PARTS LOCATION (ANTI–LOCK BRAKE SYSTEM WITH ELECTRONIC BRAKE FORCE DISTRIBUTION (EBD)) (DIAGNOSTICS)	DI–281	(1)
PARTS LOCATION (AUTOMATIC TRANSAXLE (U240E)) (DIAGNOSTICS)	DI–169	(1)
PARTS LOCATION (AUTOMATIC TRANSAXLE (U341E)) (DIAGNOSTICS)	DI–232	(1)
PARTS LOCATION (BODY CONTROL SYSTEM) (DIAGNOSTICS)	DI–537	(1)
PARTS LOCATION (CRUISE CONTROL SYSTEM) (DIAGNOSTICS)	DI–491	(1)
PARTS LOCATION (ENGINE) (DIAGNOSTICS)	DI–19	(1)
PARTS LOCATION (SUPPLEMENTAL RESTRAINT SYSTEM) (DIAGNOSTICS)	DI–335	(1)
POSITIVE CRANKCASE VENTILATION (PCV) SYSTEM	EC–4	(2)
POWER DOOR LOCK CONTROL SYSTEM	BE–62	(2)
POWER MIRROR CONTROL SYSTEM	BE–85	(2)
POWER SOURCE	BE–10	(2)
POWER STEERING FLUID	SR–4	(2)
POWER STEERING GEAR	SR–33	(2)
POWER STEERING VANE PUMP	SR-22	(2)
POWER WINDOW CONTROL SYSTEM	BE–58	(2)
PRE–CHECK (ANTI-LOCK BRAKE SYSTEM WITH ELECTRONIC BRAKE FORCE DISTRIBUTION (EBD)) (DIAGNOSTICS)	DI–276	(1)
PRE–CHECK (AUTOMATIC TRANSAXLE (U240E)) (DIAGNOSTICS)	DI–157	(1)
PRE–CHECK (AUTOMATIC TRANSAXLE (U341E)) (DIAGNOSTICS)	DI–220	(1)
PRE–CHECK (CRUISE CONTROL SYSTEM) (DIAGNOSTICS)	DI–485	(1)
PRE–CHECK (ENGINE) (DIAGNOSTICS)	DI–3	(1)
PRE–CHECK (SUPPLEMENTAL RESTRAINT SYSTEM) (DIAGNOSTICS)	DI–326	(1)
PRECAUTION (FOR ALL OF VEHICLES)	IN–10	(1)
PRESSURE SWITCH	AC–51	(2)
PROBLEM SYMPTOMS TABLE (ANTI–LOCK BRAKE SYSTEM WITH ELECTRONIC BRAKE FORCE DISTRIBUTION (EBD)) (DIAGNOSTICS)	DI–284	(1)
PROBLEM SYMPTOMS TABLE (AUTOMATIC TRANSAXLE (U240E)) (DIAGNOSTICS)	DI–172	(1)
PROBLEM SYMPTOMS TABLE (AUTOMATIC TRANSAXLE (U341E)) (DIAGNOSTICS)	DI–234	(1)
PROBLEM SYMPTOMS TABLE (BODY CONTROL SYSTEM) (DIAGNOSTICS)	DI–542	(1)
PROBLEM SYMPTOMS TABLE (CRUISE CONTROL SYSTEM) (DIAGNOSTICS)	DI–494	(1)
PROBLEM SYMPTOMS TABLE (ENGINE) (DIAGNOSTICS)	DI–22	(1)
PROBLEM SYMPTOMS TABLE (SUPPLEMENTAL RESTRAINT SYSTEM) (DIAGNOSTICS)	DI–338	(1)
PROPORTIONING VALVE (P VALVE)	BR–47	(2)

Q

Page Vol.
QUARTER WINDOW GLASS BO–55 (2)

R

RADIATOR CO–12 (2)
REAR AXLE CARRIER SA–54 (2)
REAR BRAKE CALIPER BR–36 (2)
REAR BRAKE PAD BR–33 (2)
REAR BUMPER BO–5 (2)
REAR DRUM BRAKE BR–28 (2)
REAR LOWER SUSPENSION ARM SA–71 (2)
REAR SEAT BO–101 (2)
REAR SHOCK ABSORBER SA–61 (2)
REAR SPEED SENSOR BR–58 (2)
REAR STABILIZER BAR SA-75 (2)
REAR UPPER SUSPENSION ARM SA–68 (2)
REAR WHEEL ALIGNMENT SA–8 (2)
REAR WHEEL HUB BOLT SA–60 (2)
REAR WIPER AND WASHER BO–33 (2)
REFRIGERANT LINE AC–21 (2)
REPAIR INSTRUCTIONS IN–4 (1)
REVERSE SHIFT WARNING BUZZER SYSTEM (C60) MX-55 (2)
ROOF DRIP SIDE MOULDING BO–38 (2)
ROOF HEADLINING BO–86 (2)
ROOF SIDE MOULDING BO–42 (2)

S

SEAT BELT BO–106 (2)
SEAT BELT PRETENSIONER BO–109 (2)
SFI (PREPARATION) PP–8 (1)
SFI (SERVICE SPECIFICATIONS) SS–17 (1)
SFI SYSTEM SF–1 (2)
SHIFT AND SELECT LEVER SHAFT (C56) MX–44 (2)
SHIFT AND SELECT LEVER SHAFT (C60) MX–47 (2)
SHIFT LEVER AND CONTROL CABLE (C56) MX–52 (2)
SHIFT LEVER AND CONTROL CABLE (C60) MX–57 (2)
SHIFT LOCK SYSTEM (U240E) AX–15 (2)
SHIFT LOCK SYSTEM (U341E) AX–14 (2)
SIDE AIRBAG ASSEMBLY RS–39 (2)
SIDE AIRBAG SENSOR ASSEMBLY RS–62 (2)
SIDE MUD GUARD BO–46 (2)
SLIDING ROOF BO–69 (2)
SLIDING ROOF SYSTEM BE–82 (2)
SPEED SENSOR (U240E) AX–4 (2)
SRS AIRBAG BO–3 (2)
SRS AIRBAG RS–1 (2)
STANDARD BOLT (SERVICE SPECIFICATIONS) SS–1 (1)
STARTER ST-2 (2)
STARTER RELAY ST–17 (2)
STARTING (PREPARATION) PP–21 (1)
STARTING (SERVICE SPECIFICATIONS) SS–25 (1)
STARTING SYSTEM ST–1 (2)
STEERING (PREPARATION) PP–67 (1)
STEERING (SERVICE SPECIFICATIONS) SS–51 (1)
STEERING SYSTEM SR–1 (2)
STEERING WHEEL SR–8 (2)
STEERING WHEEL PAD AND SPIRAL CABLE RS–12 (2)
STOP LIGHT SYSTEM BE-32 (2)
SUPPLEMENTAL RESTRAINT SYSTEM (DIAGNOSTICS) DI–324 (1)
SUPPLEMENTAL RESTRAINT SYSTEM (PREPARATION) PP–74 (1)
SUPPLEMENTAL RESTRAINT SYSTEM (SERVICE SPECIFICATIONS) SS–53 (1)
SUSPENSION AND AXLE (PREPARATION) PP–56 (1)
SUSPENSION AND AXLE (SERVICE SPECIFICATIONS) SS–45 (1)

T

TERMINALS OF ECM (AUTOMATIC TRANSAXLE (U240E)) (DIAGNOSTICS) DI–170 (1)
TERMINALS OF ECM (AUTOMATIC TRANSAXLE (U341E)) (DIAGNOSTICS) DI–233 (1)
TERMINALS OF ECM (ENGINE) (DIAGNOSTICS) DI–20 (1)
TERMINALS OF ECU (ANTI–LOCK BRAKE SYSTEM WITH ELECTRONIC BRAKE FORCE DISTRIBUTION (EBD)) (DIAGNOSTICS) DI–282 (1)
TERMINALS OF ECU (BODY CONTROL SYSTEM) (DIAGNOSTICS) DI–539 (1)
TERMINALS OF ECU (CRUISE CONTROL SYSTEM) (DIAGNOSTICS) DI–492 (1)
TERMINALS OF ECU (SUPPLEMENTAL RESTRAINT SYSTEM) (DIAGNOSTICS) DI–336 (1)
TERMS IN–35 (1)
THERMISTOR AC-50 (2)
THERMOSTAT CO–8 (2)
THREE-WAY CATALYTIC CONVERTER (TWC) SYSTEM EC–11 (2)
THROTTLE BODY SF–33 (2)
TILT STEERING COLUMN SR-9 (2)
TIMING CHAIN EM–15 (2)
TIRE AND WHEEL SA-2 (2)
TORQUE CONVERTER CLUTCH AND DRIVE PLATE (U240E) AX–36 (2)
TORQUE CONVERTER CLUTCH AND DRIVE PLATE (U341E) AX–36 (2)
TROUBLESHOOTING AC–14 (2)
TROUBLESHOOTING BE–2 (2)
TROUBLESHOOTING BR-2 (2)
TROUBLESHOOTING CL–1 (2)
TROUBLESHOOTING SA–1 (2)
TROUBLESHOOTING SR-2 (2)
TROUBLESHOOTING (C56) MX–1 (2)
TROUBLESHOOTING (C60) MX–1 (2)
TURN SIGNAL AND HAZARD WARNING SYSTEM BE-25 (2)

U

UNDER HOOD MA–4 (1)

V

VALVE BODY ASSEMBLY (U240E) AX–10 (2)
VALVE BODY ASSEMBLY (U341E) AX-9 (2)
VALVE CLEARANCE EM–4 (2)
VAPOR PRESSURE SENSOR SF–64 (2)
VEHICLE IDENTIFICATION AND ENGINE SERIAL NUMBER (IDENTIFICATION INFORMATION) IN–3 (1)
VEHICLE LIFT AND SUPPORT LOCATIONS (REPAIR INSTRUCTIONS) IN–8 (1)
VEHICLE SPEED SENSOR (U240E) AX–3 (2)
VEHICLE SPEED SENSOR (U341 E) AX-3 (2)
VSV FOR CANISTER CLOSED VALVE (CCV) SF–58 (2)
VSV FOR EVAPORATIVE EMISSION (EVAP) SF-56 (2)
VSV FOR INTAKE AIR CONTROL VALVE SF-54 (2)
VSV FOR PRESSURE SWITCHING VALVE SF–60 (2)

W

	Page	Vol.
WATER PUMP	CO–4	(2)
WINDSHIELD	BO–47	(2)
WIPER AND WASHER SYSTEM	BE–34	(2)
WIRE HARNESS AND CONNECTOR	RS–72	(2)
WIRELESS DOOR LOCK CONTROL SYSTEM	BE–67	(2)

TOYOTA

QUALITY SERVICE

OVERSEAS SERVICE DIVISION
TOYOTA MOTOR CORPORATION

PRINTED IN USA